Form No. 3410-425 Rev A

TORO®

Count on it.

Parts Catalog

Brake Replacement Kit

Workman® HD or HDX Series Utility Vehicle

Model No. 136-6291

Register at www.Toro.com.
Original Instructions (EN)

CE

3410-425 A

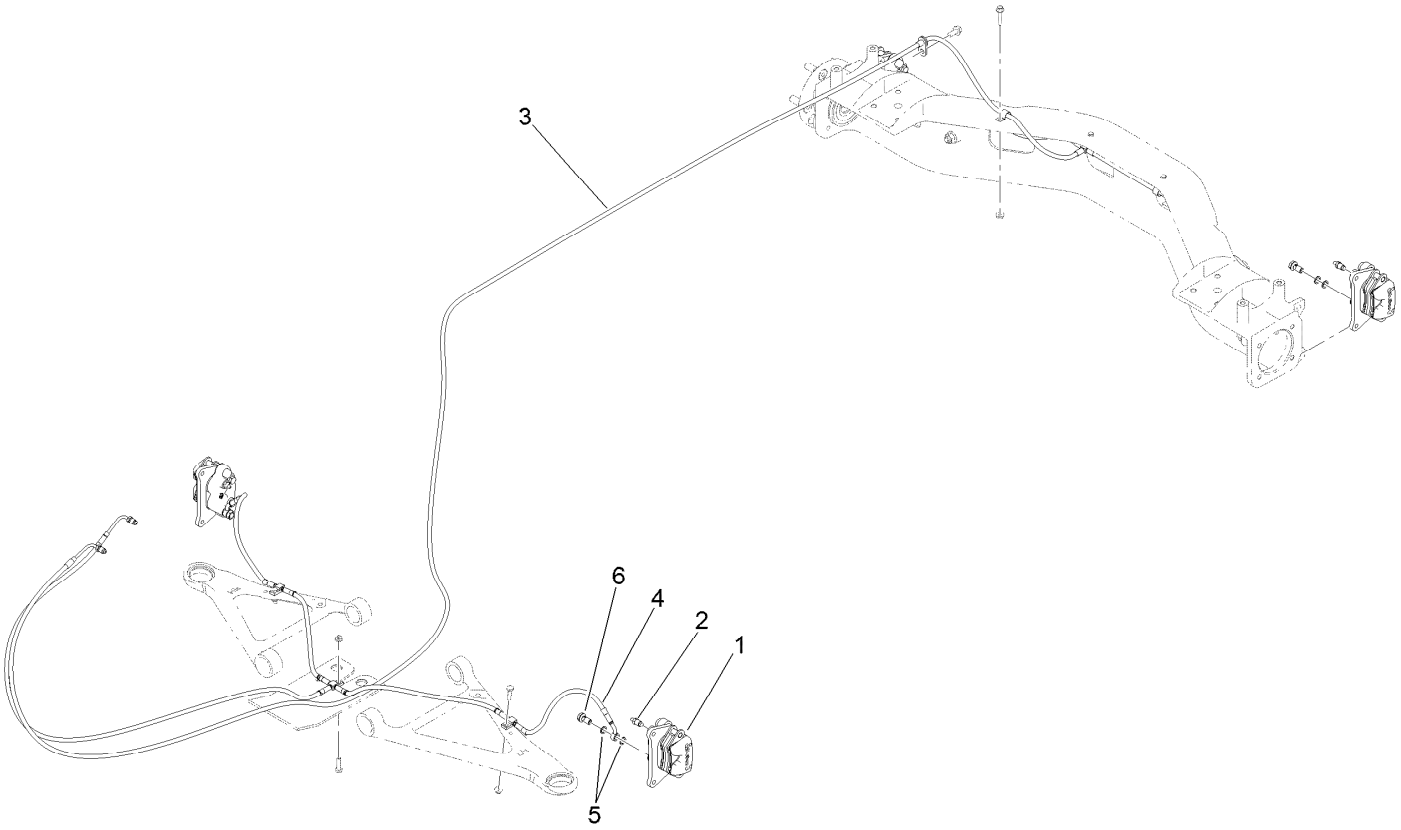

Brake Replacement Assembly No. 136-6291

Ref.	*Part Number*	*Qty.*	*Description*
1	127-7424	4	Brake Caliper ASM
2	119-9509	4	Screw-Bleed
3	119-9681	1	Rear Brake Line ASM
4	119-9682	1	Front Brake Line ASM
5	115-2341	8	Washer-Banjo
6	120-4875	4	Bolt-Flange, Banjo

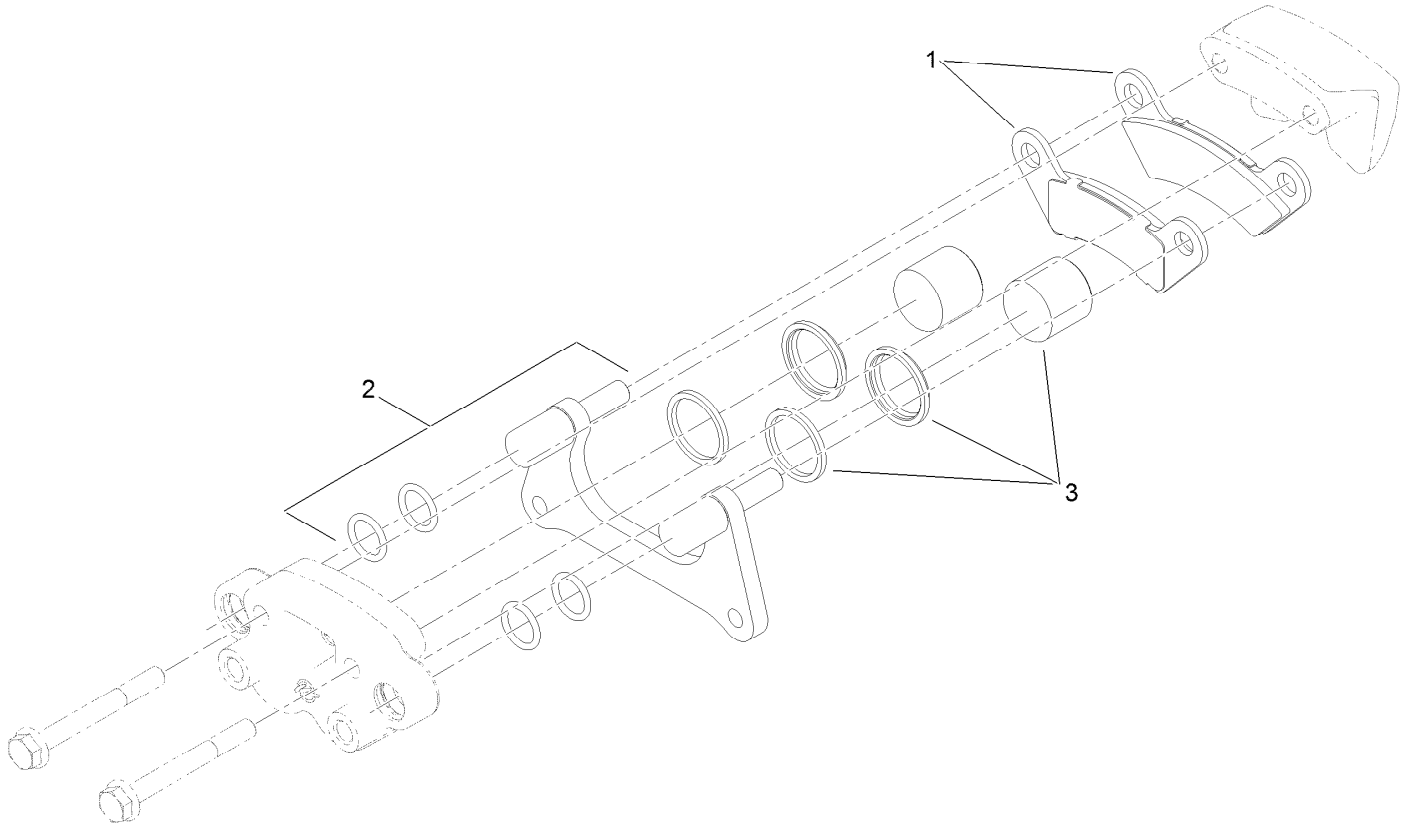

Brake Caliper Assembly No. 127-7424

Ref.	*Part Number*	*Qty.*	*Description*
1	119-9510	1	Pads-Brake
2	119-9511	1	Bracket Kit
3	133-0614	1	Piston Kit



Count on it.