Form No. 3410-564 Rev A

TORO®

Count on it.

Parts Catalog

# Z Master® Professional 7000 Series Riding Mower

## With 152cm TURBO FORCE® Side Discharge Mower

**Model No. 74265TE—Serial No. 400000000 and Up**

Register at www.Toro.com.
Original Instructions (EN)

CE

*3410-564* A

# Ordering Replacement Parts

To order replacement parts, please supply the part number, the quantity, and the description of each part desired.

### Understanding Reference Numbers

Each identified part in an illustration has a reference number. The reference number for a part also appears in the parts list, along with other information about the part.

This catalog uses two special reference number formats, one to indicate parts in a service assembly and another to indicate the quantity of a given part in an illustration.

### Service Assembly Reference Numbers

Parts in service assemblies have reference numbers in the form a:b. The a represents the reference number of the entire service assembly and the b represents a sequential number unique to each part within the service assembly.

For example, a wheel assembly might be identified by reference number 6, the tire by 6:1, the valve by 6:2, and the wheel by 6:3. When you order the assembly identified by reference number 6, you receive all parts identified by reference numbers 6:1,6:2, and 6:3. However, you may also order any part individually. Reference numbers of this type appear in illustration and in parts lists.

### Reference Numbers Indicating Quantity

In an illustration, if a reference number indicates more than one part, the reference number has the form nX y. The n represents the quantity of the part, the X is the multiplication symbol, and the y represents the reference number.

For example, in an illustration, the reference number 2X 37 means that two of the parts identified by reference number 37 are indicated.

# Contents

Front Frame Assembly . . . 4
Fork, Caster Wheel and Z Stand Assembly . . . 6
Traction Frame and Floor Pan Assembly . . . 7
Seat and Roll-Over Protection System Assembly . . . 8
Seat Assembly No. 125-3107 . . . 9
Roll-Over Protection System Assembly No. 110-0877 . . . 10
Main Frame and Rear Wheel Assembly . . . 11
Hydro Control Assembly . . . 13
Engine, Exhaust and Air Intake Assembly . . . 15
Air Cleaner Assembly No. 93-2190 . . . 16
Hydro and Gearbox Assembly . . . 17
Gearbox Assembly No. 107-9887 . . . 19
Hydraulic Tank, Pump and Motor Assembly . . . 20
Tandem Pump Assembly No. 107-9885 . . . 22
Hydraulic Motor Assembly No. 112-8358 (CW) . . . 23
Hydraulic Motor Assembly No. 112-8357 (CCW) . . . 24
Hydraulic Hose System Assembly . . . 25
Fuel System and Throttle Control Assembly . . . 26
Fuel Line Assembly . . . 27
Engine Housing Assembly . . . 28
Cooling System Assembly . . . 30
Hood Assembly . . . 31
Deck Connection Assembly . . . 32
Deck Decal Assembly No. 131-7717 . . . 33
Deck Assembly . . . 34
Spindle Assembly No. 127-0560 . . . 36
Rubber Deflector Assembly No. 108-2792 . . . 37
Electrical Assembly . . . 38
Crankcase Assembly . . . 39
Oil Pan, Oil Pump and Dipstick Assembly . . . 40
Cylinder Head Assembly . . . 41
Gear Case and Oil Filter Cartridge Assembly . . . 42
Cylinder Head Cover Assembly . . . 43
Main Bearing Case Assembly . . . 44
Camshaft and Idle Gear Shaft Assembly . . . 45
Piston and Crankshaft Assembly . . . 46
Fuel Camshaft Assembly . . . 47
Idle Apparatus and Fuel Pump Cover Assembly . . . 48
Stop Solenoid and Speed Control Plate Assembly . . . 49
Injection Pump Assembly . . . 50
Governor Assembly . . . 51
Nozzle Holder and Glow Plug Assembly . . . 52
Nozzle Holder Assembly . . . 53
Alternator and Pulley Assembly . . . 56
Alternator Components Assembly . . . 57
Starter and Flywheel Assembly . . . 58
Starter Component Assembly . . . 59
Water Flange and Thermostat Assembly . . . 60
Water Pump and Water Pipe Assembly . . . 61
Valve and Rocker Arm Assembly . . . 62
Inlet and Exhaust Manifold Assembly . . . 63
Miscellaneous Engine Parts . . . 64
Upper Engine Gasket Kit . . . 65
Lower Engine Gasket Kit . . . 66
Attachments and Accessories . . . 67

**© 2017—The Toro® Company**
**8111 Lyndale Avenue South**
**Bloomington, MN 55420**



**Contact us at www.Toro.com.**
**Printed in the USA.**
**All Rights Reserved**

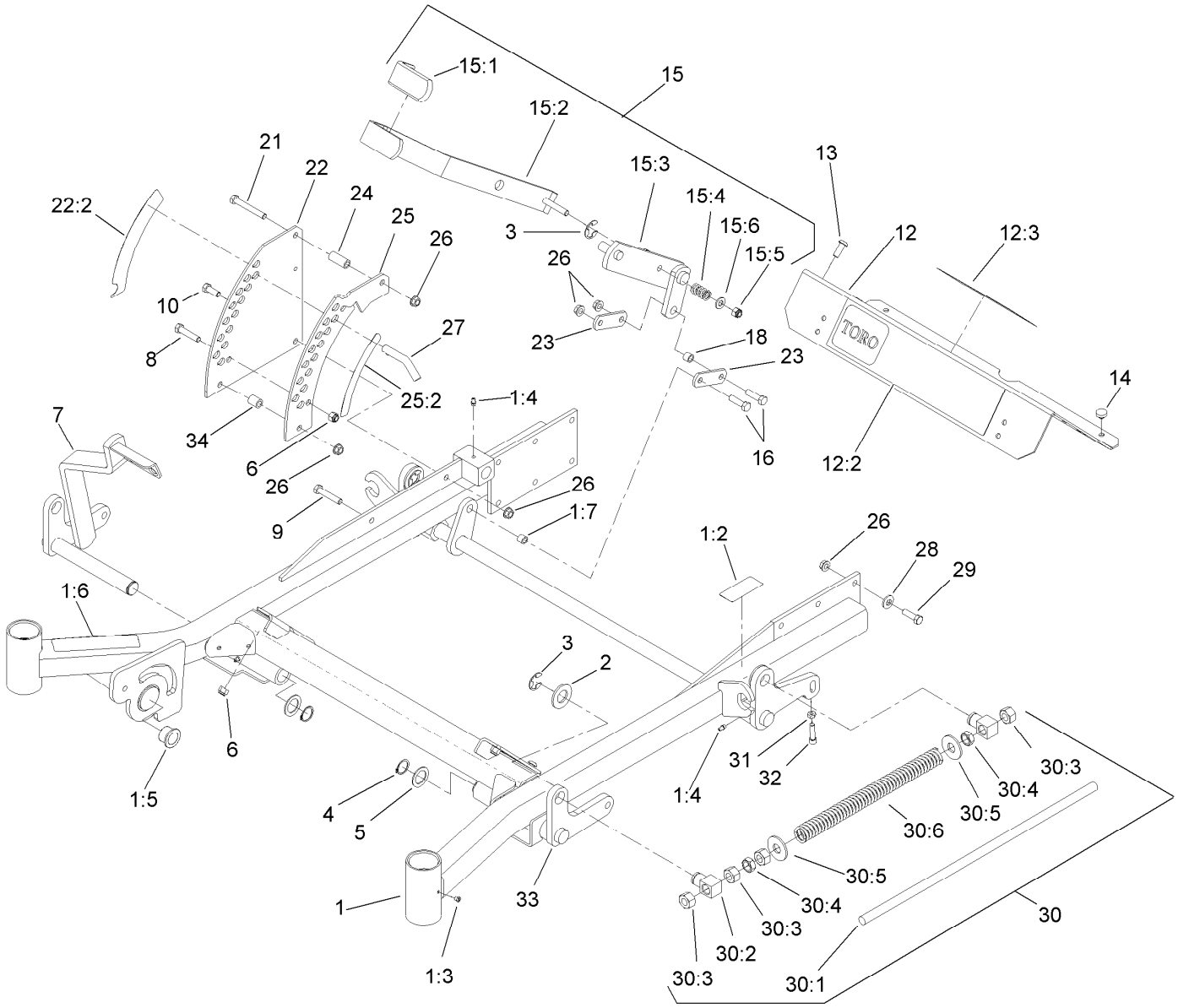


# Front Frame Assembly

| Ref. | Part Number | Qty. | Description |
|---|---|---|---|
| 1 | 107-3980 | 1 | Frame ASM |
| 1:2 | 107-3968 | 1 | Decal-Brake, Parking |
| 1:3 | 1-811010 | 2 | Plug |
| 1:4 | 302-19 | 5 | Fitting-Grease |
| 1:5 | 94-1291 | 2 | Bushing |
| 1:6 | 107-3969 | 1 | Decal-Warning |
| 1:7 | 103-1918 | 1 | Bushing |
| 2 | 3256-29 | 4 | Washer-Flat |
| 3 | 32151-103 | 5 | Ring-Retaining, EXT |
| 4 | 32151-29 | 2 | Ring-Retaining |
| 5 | 1-523157 | 2 | Washer-Spacer |
| 6 | 3296-39 | 5 | Nut-Lock, NI |
| 7 | 108-7786-01 | 1 | Lift-Deck, RH Front |
| 8 | 323-9 | 1 | Screw-HH |
| 9 | 323-10 | 1 | Screw-HH |
| 10 | 323-6 | 1 | Screw-HH |
| 12 | 107-3976 | 1 | Footrest |
| 12:2 | 136-5521 | 1 | Decal |

| Ref. | Part Number | Qty. | Description |
|---|---|---|---|
| 12:3 | 132-0871 | 1 | Decal-Danger |
| 13 | 3274-94 | 4 | Screw-HSBH |
| 14 | 1-513658 | 2 | Bumper |
| 15 | 110-5860 | 1 | Deck Lift Handle ASM |
| 15:1 | 1-633295 | 1 | Grip-Lever, Lift |
| 15:2 | 103-2083-03 | 1 | Lever-Lift |
| 15:3 | 103-2064-03 | 1 | Arm-Lift, Deck |
| 15:4 | 1-633325 | 1 | Spring-Compression |
| 15:5 | 3296-39 | 1 | Nut-Lock, NI |
| 15:6 | 3256-24 | 1 | Washer-Flat |
| 16 | 323-29 | 2 | Screw-HH |
| 18 | 103-1918 | 1 | Bushing |
| 21 | 323-11 | 1 | Screw-HH |
| 22 | 117-0367 | 1 | Plate-HOC, Outer |
| 22:2 | 107-3961 | 1 | Decal-Height, Deck |
| 23 | 1-633068 | 2 | Arm-Lift, Deck |
| 24 | 1-633082 | 1 | Bushing-Lever, Lift |
| 25 | 117-0370 | 1 | Plate-HOC, Inner |

● Not serviced separately

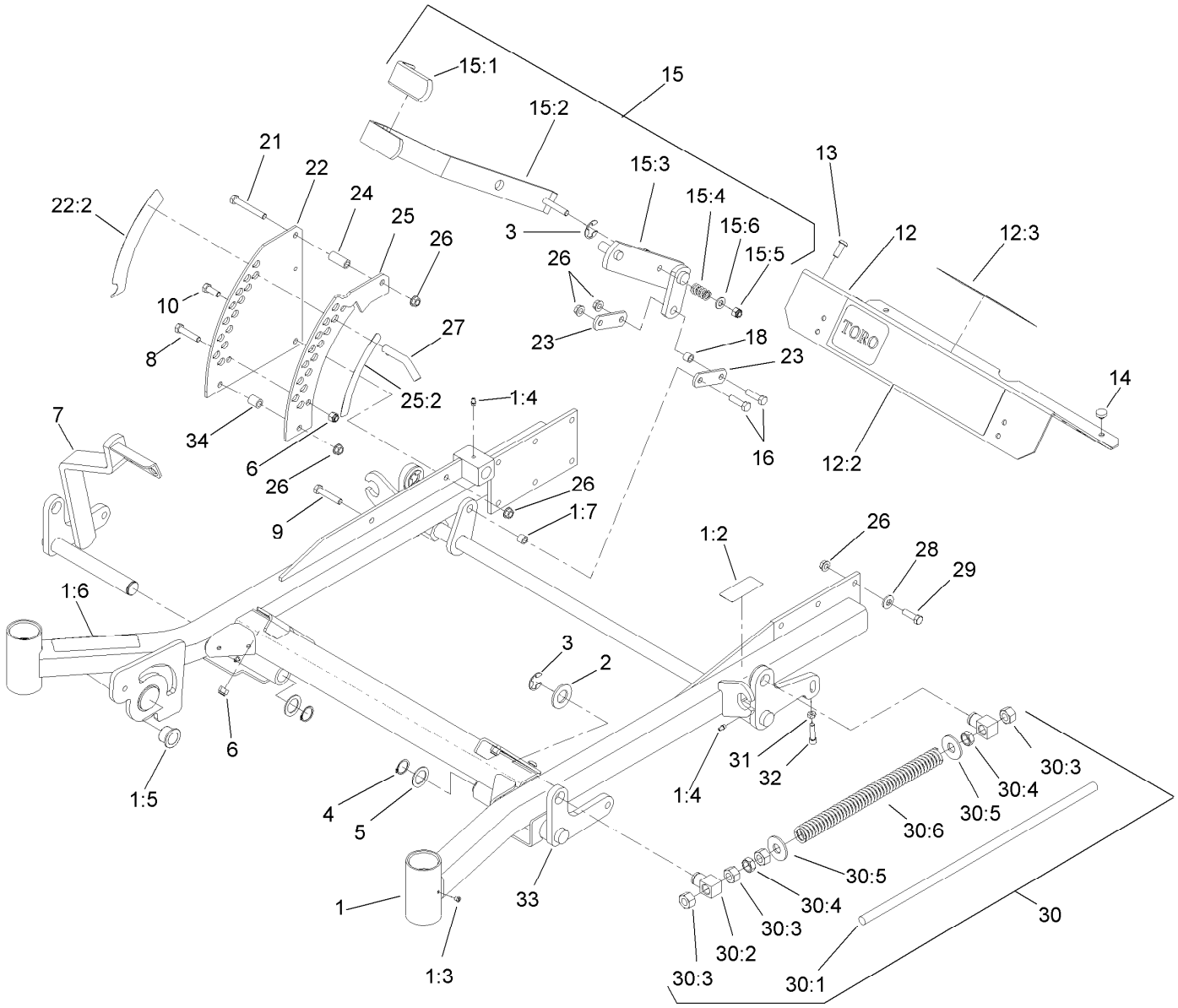


# Front Frame Assembly (continued)

| Ref. | Part Number | Qty. | Description |
|---|---|---|---|
| 25:2 | 107-3962 | 1 | Decal-Height, Deck |
| 26 | 3290-357 | 17 | Nut-HHF, Whiz |
| 27 | 109-8757 | 1 | Pin-HOC |
| 28 | 98-5975 | 12 | Washer-Belleville |
| 29 | 323-7 | 12 | Screw-HH |
| 30 | | 2 | Front Frame Spring ASM ● |
| 30:1 | 1-633096 | 1 | Rod-Lift, Deck |
| 30:2 | 1-633441 | 2 | Swivel-Deck Mount, Rear |

| Ref. | Part Number | Qty. | Description |
|---|---|---|---|
| 30:3 | 3217-11 | 4 | Nut-Hex |
| 30:4 | 3218-6 | 2 | Nut-Jam |
| 30:5 | 3256-7 | 2 | Washer-Flat |
| 30:6 | 1-633064 | 1 | Spring-Support, Deck |
| 31 | 3218-2 | 2 | Nut-Jam |
| 32 | 3274-18 | 2 | Screw-HSH |
| 33 | 106-8984-01 | 1 | Lift-Deck, LH |
| 34 | 1-633080 | 1 | Bushing-Lever, Lift |

● Not serviced separately

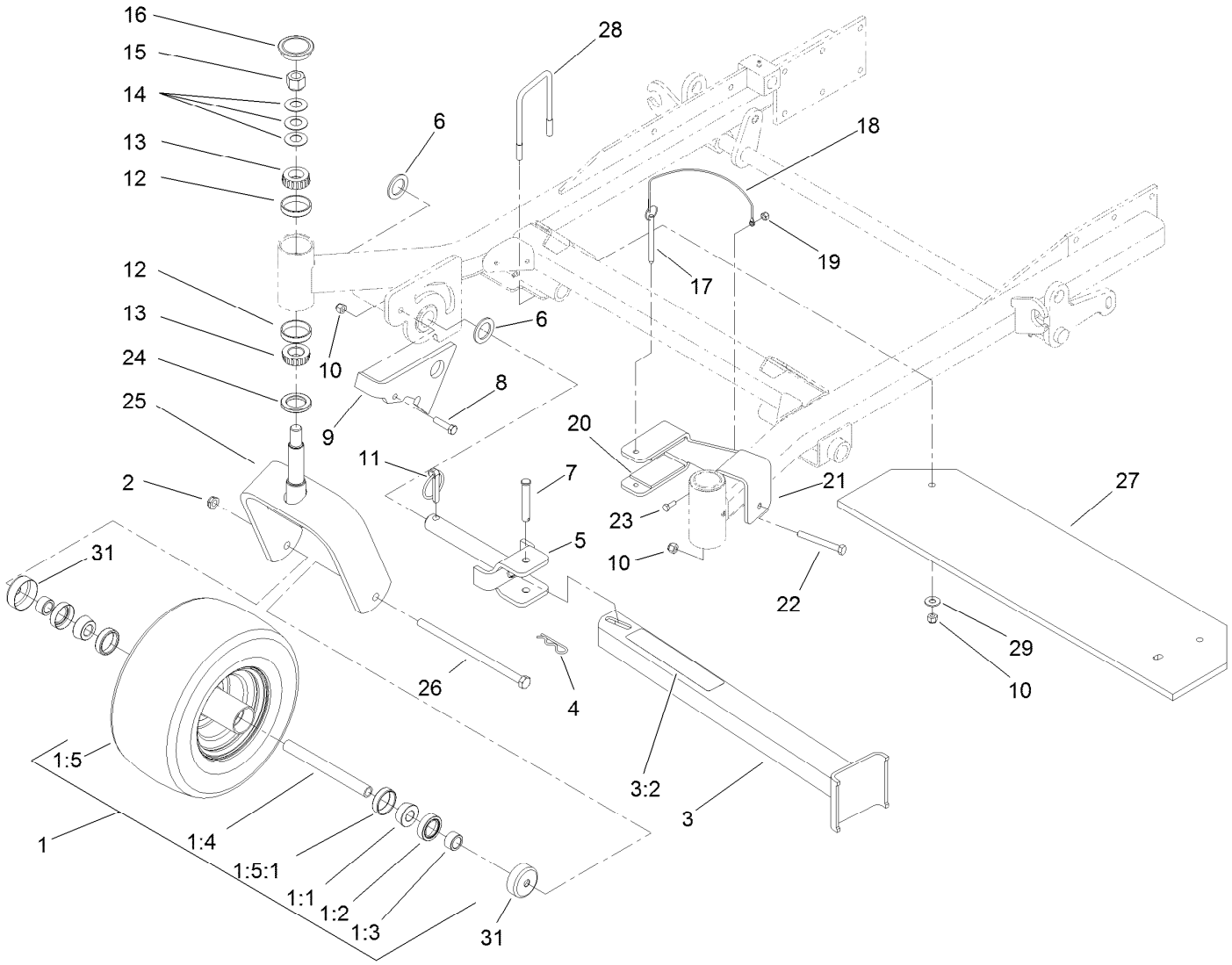


# Fork, Caster Wheel and Z Stand Assembly

| Ref. | Part Number | Qty. | Description |
|---|---|---|---|
| 1 | 109-9125 | 2 | Wheel And Tire ASM |
| 1:1 | 1-633585 | 2 | Bearing-Cone, Taper |
| 1:2 | 103-0063 | 2 | Seal-Caster |
| 1:3 | 103-3051 | 1 | Spacer-Nut ■ |
| 1:4 | 126-5361 | 1 | Axle Caster ASM |
| 1:5 | | 1 | Wheel And Tire ASM ● |
| 1:5:1 | 1-633584 | 2 | Bearing-Cup |
| 2 | 3296-45 | 2 | Nut-Lock, NI |
| 3 | 107-1874 | 1 | Leg ASM |
| 3:2 | 106-7464 | 1 | Decal-Z Stand |
| 4 | 3290-355 | 1 | Pin-Hair |
| 5 | 100-9692-01 | 1 | Pin-Pivot |
| 6 | 3-6781 | 2 | Washer-Thrust |
| 7 | 283-55 | 1 | Pin-Clevis |
| 8 | 323-8 | 1 | Screw-HH |
| 9 | 136-1657-01 | 1 | Plate-Latch |
| 10 | 3296-39 | 6 | Nut-Lock, NI |
| 11 | 283-71 | 1 | Pin-Lynch |
| 12 | 254-72 | 4 | Bearing-Cup, Tapered |
| 13 | 254-94 | 4 | Bearing-Cone, Tapered |
| 14 | 1-633508 | 6 | Washer-Bellville |
| 15 | 3296-51 | 2 | Nut-Lock, NI |
| 16 | 103-4882 | 2 | Cap-Grease |
| 17 | 105-1647 | 1 | Pin-Hitch, Cotterless |
| 18 | 100-9385 | 1 | Lanyard-Nylon |
| 19 | 3296-42 | 1 | Nut-Lock, NI |
| 20 | 100-6547 | 2 | Cushion-Rubber |
| 21 | 100-6542-01 | 1 | Bracket-Cradle |
| 22 | 323-20 | 1 | Screw-HH |
| 23 | 321-4 | 1 | Screw-HH |
| 24 | 116-5647 | 2 | Seal-Grease |
| 25 | 116-6707-01 | 2 | Caster |
| 26 | 325-39 | 2 | Screw-HH |
| 27 | 107-9854-01 | 1 | BAR-Weight |
| 28 | 110-0817 | 2 | U-Bolt, 3In |
| 29 | 3256-4 | 4 | Washer-Flat |
| 31 | 103-2768 | 4 | Guard-Seal |

● Not serviced separately
■ Use Pro-Lock, Nut Type (P/N 1-840022, .5ml tube) on threads.

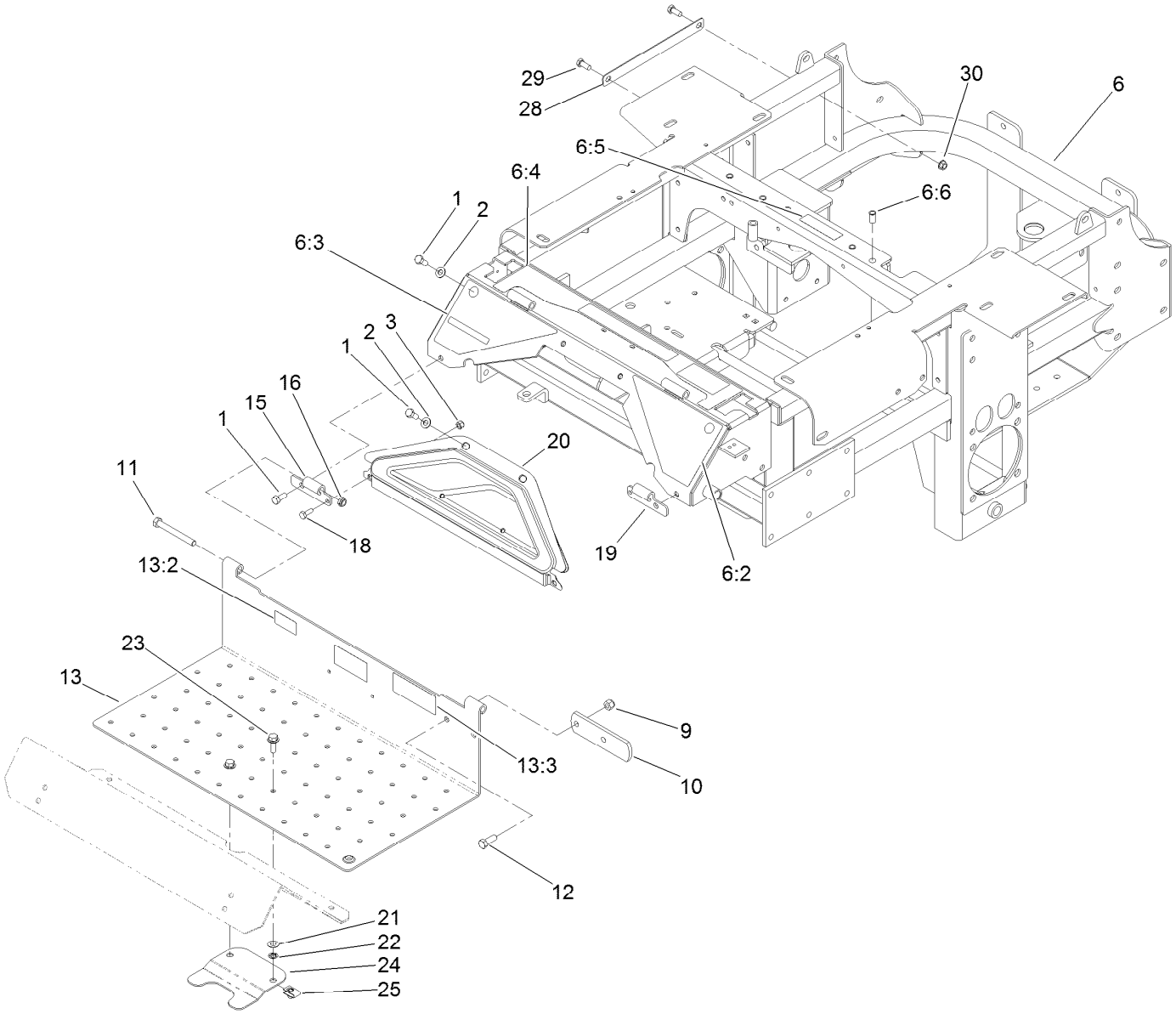


# Traction Frame and Floor Pan Assembly

| Ref. | Part Number | Qty. | Description |
|---|---|---|---|
| 1 | 322-43 | 6 | Screw-HH |
| 2 | 3256-70 | 4 | Washer-Flat |
| 3 | 3296-42 | 2 | Nut-Lock, NI |
| 6 | 131-7712 | 1 | Traction Frame ASM |
| 6:2 | 107-3963 | 1 | Decal-Danger, Left |
| 6:3 | 107-3964 | 1 | Decal-Warning, Right |
| 6:4 | 110-0820 | 1 | Decal-Console, Top (CE) |
| 6:5 | 112-9028 | 1 | Decal-Missing, Cover |
| 6:6 | 32148-11 | 5 | Insert-Threaded |
| 9 | 3296-39 | 2 | Nut-Lock, NI |
| 10 | 1-633964-03 | 1 | Stop-Brake, Park |
| 11 | 323-20 | 2 | Screw-HH |
| 12 | 323-6 | 2 | Screw-HH |
| 13 | 115-3851 | 1 | Floor PAN ASM |
| 13:2 | 98-4387 | 1 | Decal-Protection, Ear |

| Ref. | Part Number | Qty. | Description |
|---|---|---|---|
| 13:3 | 121-7559 | 1 | Decal-Diesel, Bio-Ready |
| 15 | 106-7488-03 | 1 | Hinge-Floorpan, LH |
| 16 | 3296-59 | 2 | Nut-Lock, NI |
| 18 | 321-4 | 2 | Screw-HH |
| 19 | 106-7489-03 | 1 | Hinge-Floorpan, RH |
| 20 | 106-7498 | 1 | Pocket |
| 21 | 73-0041 | 2 | Washer-Thrust |
| 22 | 117-2749 | 2 | Nut-Push |
| 23 | 3234-29 | 2 | Screw-HHF |
| 24 | 119-0395-03 | 1 | Adapter-Captive |
| 25 | 94-2413 | 2 | Nut-U |
| 28 | 131-8671-03 | 1 | Strip |
| 29 | 323-5 | 2 | Screw-HH |
| 30 | 3290-357 | 2 | Nut-HHF, Whiz |

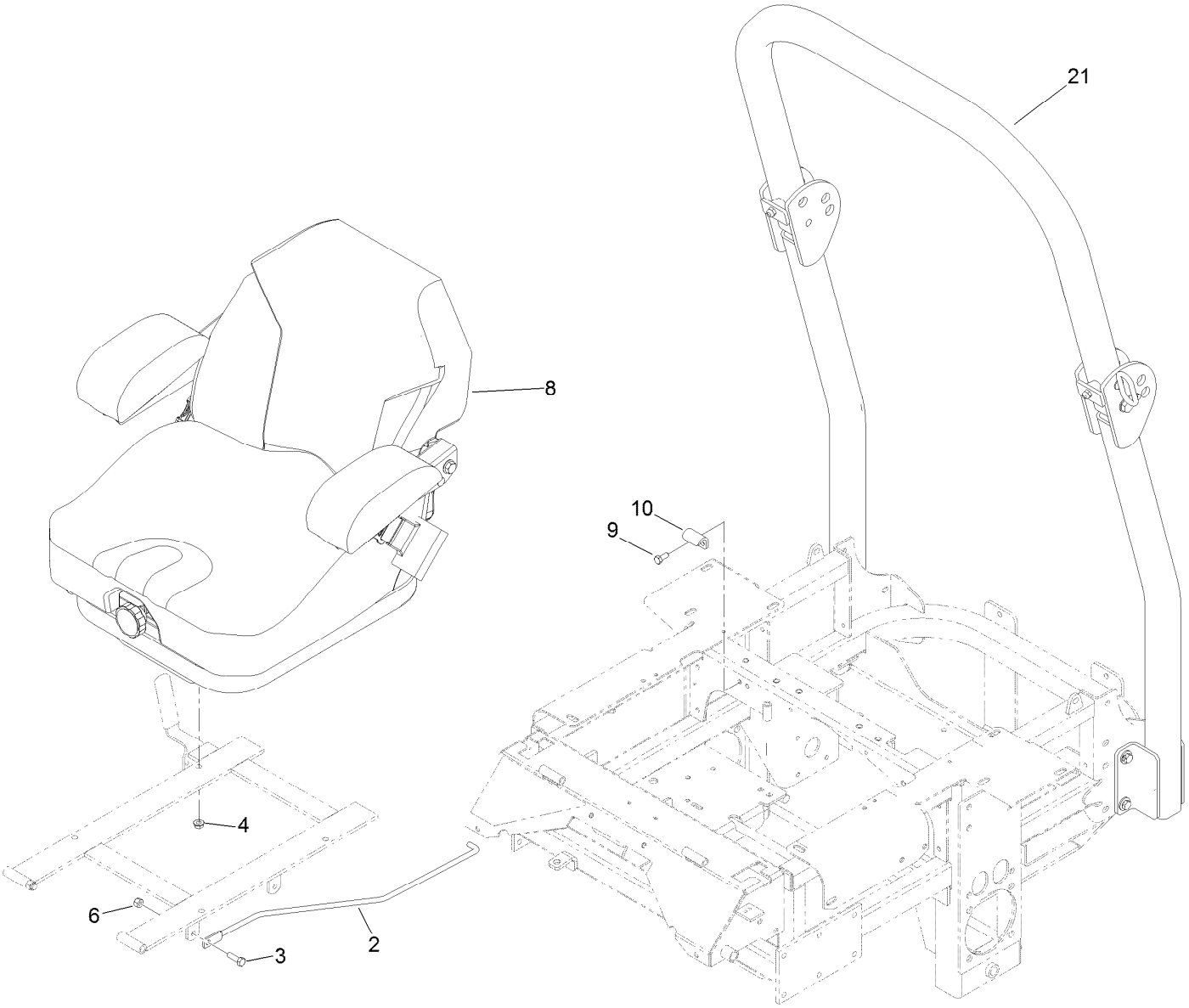


# Seat and Roll-Over Protection System Assembly

| *Ref.* | *Part Number* | *Qty.* | *Description* |
|---|---|---|---|
| 2 | 108-5341 | 1 | Rod-Prop, Seat |
| 3 | 322-5 | 1 | Screw-HH |
| 4 | 32128-20 | 4 | Nut-HF |
| 6 | 3296-29 | 3 | Nut-Lock, NI |
| 8 | 125-3107 | 1 | Suspension Seat ASM |
| 9 | 322-3 | 2 | Screw-HH |
| 10 | 107-3058 | 1 | Catch-Latch, Seat |
| 21 | 110-0877 | 1 | ROPS Kit |

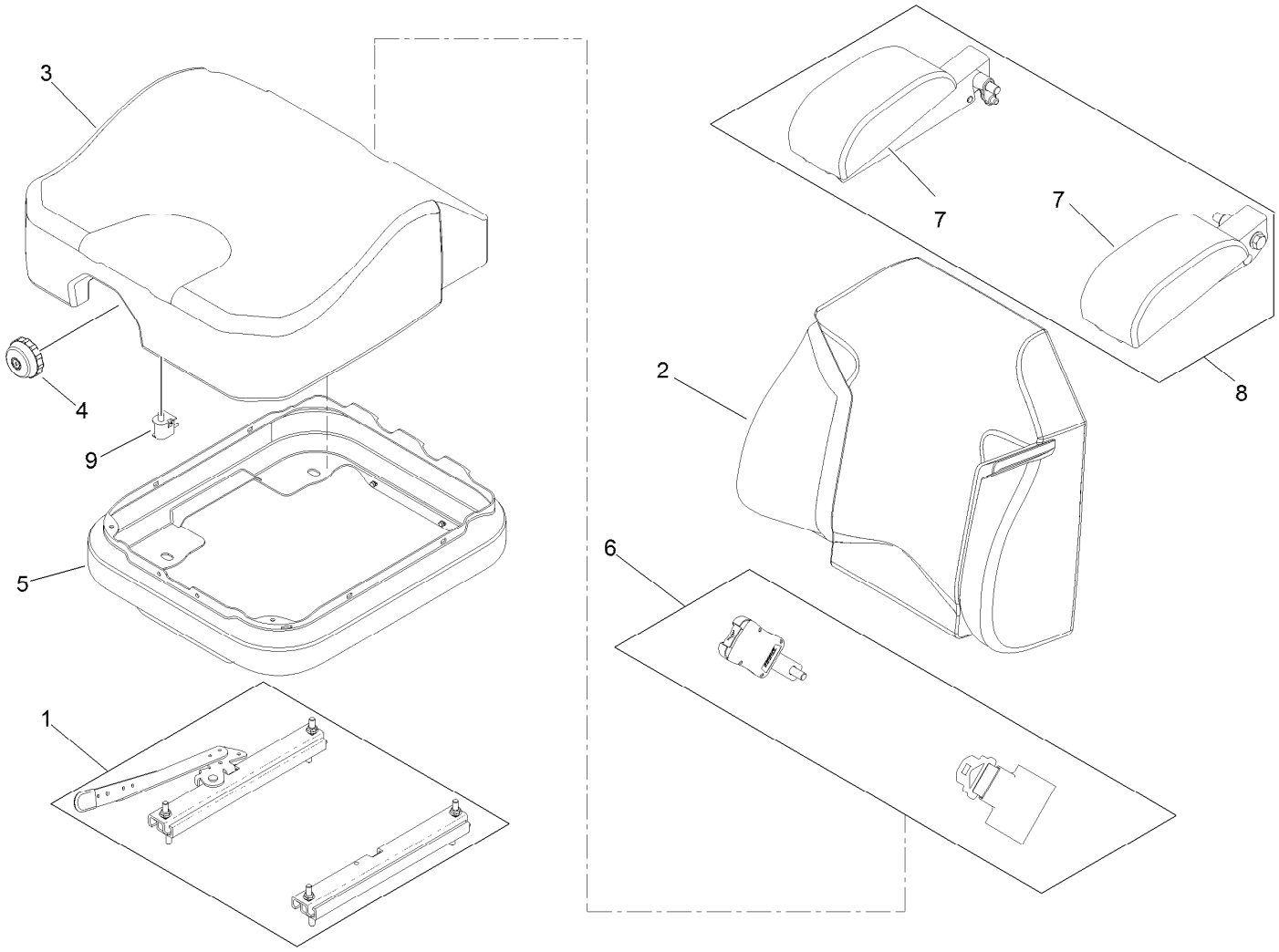


# Seat Assembly No. 125-3107

| *Ref.* | *Part Number* | *Qty.* | *Description* |
|---|---|---|---|
| 1 | 116-8910 | 1 | Seat Track Set |
| 2 | 125-3112 | 1 | Cover-Back |
| 3 | 125-3111 | 1 | Cover-Cushion |
| 4 | 116-8911 | 1 | Knob-Adjuster |
| 5 | 116-5659 | 1 | Cover-Suspension Bellows |
| 6 | 126-2061 | 1 | Seat Belt Service Kit |
| 7 | 109-9802 | 1 | Arm Rest Pad Set |
| 8 | 109-9803 | 1 | Arm Rest Set |
| 9 | 82-2190 | 1 | Switch-Bail |

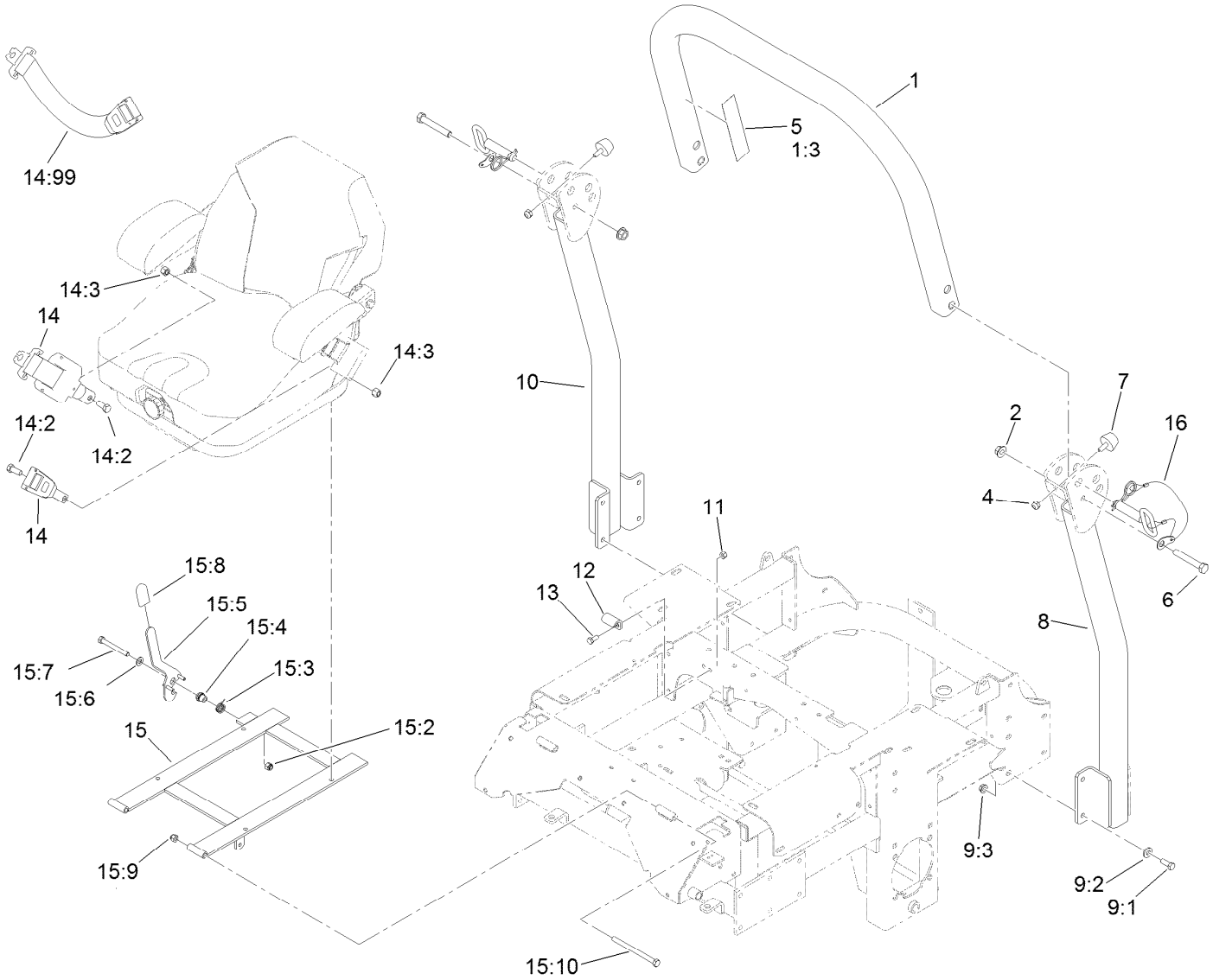


# Roll-Over Protection System Assembly No. 110-0877

| Ref. | Part Number | Qty. | Description |
|---|---|---|---|
| 1 | | 1 | Upper Tube ASM ■ |
| 1:3 | 107-2102 | 1 | Decal-Warning, Folding ROPS |
| 2 | 32128-23 | 2 | Nut-HF |
| 4 | 3296-73 | 2 | Nut-Lock, NI |
| 5 | 107-3069 | 1 | Decal-Warning |
| 6 | 325-13 | 2 | Screw-HH |
| 7 | 109-2365 | 2 | Bumper-Rubber |
| 8 | | 1 | Tube-Support, LH ■ |
| 9 | | 1 | Bag-Bolt, ROPS ● ■ |
| 9:1 | 323-6 | 8 | Screw-HH |
| 9:2 | 98-5975 | 8 | Washer-Belleville |
| 9:3 | 3290-357 | 8 | Nut-HHF, Whiz |
| 10 | | 1 | Tube-Support, RH ■ |
| 11 | 3296-29 | 2 | Nut-Lock, NI |
| 12 | 107-3058 | 1 | Catch-Latch, Seat |
| 13 | 322-3 | 2 | Screw-HH |
| 14 | 110-0883 | 1 | Retractable Seatbelt Kit |
| 14:2 | 3212-4 | 2 | Screw-HH |
| 14:3 | 3296-7 | 2 | Nut-Lock |
| 14:99 | 109-6226 | 1 | Seat Belt Extension Kit |
| 15 | 110-0874 | 1 | Seatframe ASM |
| 15:2 | 3296-39 | 1 | Nut-Lock, NI |
| 15:3 | 107-0076 | 1 | Spring-Torsion |
| 15:4 | 107-0075 | 1 | Bushing-Latch, Seat |
| 15:5 | 107-3083 | 1 | Latch ASM |
| 15:6 | 3256-24 | 1 | Washer-Flat |
| 15:7 | 323-20 | 1 | Screw-HH |
| 15:8 | 103-4434 | 1 | Grip-Lever |
| 15:9 | 3296-39 | 2 | Nut-Lock, NI |
| 15:10 | 323-39 | 2 | Screw-HH |
| 16 | 103-4553 | 2 | Pin-Fold, ROPS |

● Not illustrated

■ Not serviced separately

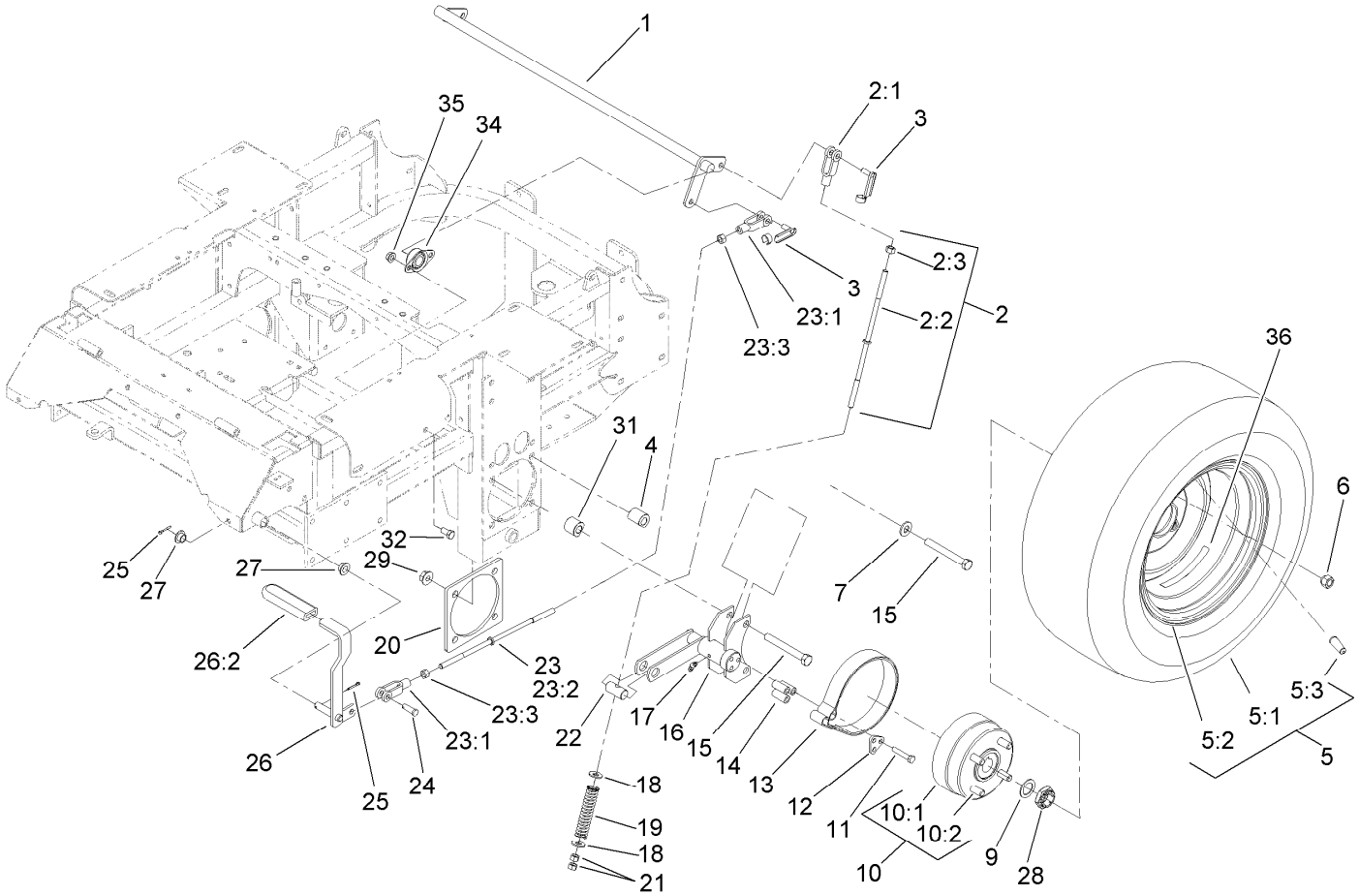


# Main Frame and Rear Wheel Assembly

| Ref. | Part Number | Qty. | Description |
|---|---|---|---|
| 1 | 1-632217-03 | 1 | Shaft-Brake |
| 2 | 108-5963 | 2 | Brake Rod ASM |
| 2:1 | 1-633131 | 1 | Yoke-Linkage, Brake |
| 2:2 | 108-5980 | 1 | Rod-Brake |
| 2:3 | 3219-3 | 1 | Nut-Hex |
| 3 | 103-2399 | 3 | Pin-Spring, Clevis |
| 4 | 114-1185 | 4 | Spacer-Wheel, Long |
| 5 | 109-8972 | 2 | Wheel And Tire ASM |
| 5:1 | 1-633993 | 1 | Tire |
| 5:2 | 109-3156 | 1 | Rim |
| 5:3 | 232-27 | 1 | Stem-Valve |
| 6 | 242-50 | 8 | Nut-Lug |
| 7 | 87-7270 | 4 | Washer-Thrust |
| 9 | 1-523157 | 2 | Washer-Spacer |
| 10 | 103-0590 | 2 | Wheel Hub ASM |
| 10:1 | 103-0589 | 1 | Hub-Wheel |
| 10:2 | 1-633926 | 4 | Stud-Wheel |
| 11 | 322-9 | 6 | Screw-HH |
| 12 | 103-0374 | 2 | Retainer-Band, Brake |
| 13 | 103-0355 | 2 | Band-Brake |
| 14 | 103-0384 | 6 | Spacer |

| Ref. | Part Number | Qty. | Description |
|---|---|---|---|
| 15 | 325-18 | 8 | Screw-HH |
| 16 | 103-0352-03 | 2 | Bracket-Brake |
| 17 | 1481 | 2 | Fitting-Grease |
| 18 | 3256-4 | 4 | Washer-Flat |
| 19 | 1-633454 | 2 | Spring-Brake |
| 20 | 103-3271-03 | 2 | Plate-Reinforcement |
| 21 | 3219-3 | 4 | Nut-Hex |
| 22 | 1-633144 | 2 | Pin-Trunion |
| 23 | 108-5962 | 1 | Brake Rod ASM |
| 23:1 | 1-633131 | 2 | Yoke-Linkage, Brake |
| 23:2 | 1-633477 | 1 | Rod-Brake |
| 23:3 | 3219-3 | 2 | Nut-Hex |
| 24 | 1-808285 | 1 | Pin-Clevis |
| 25 | 3272-10 | 2 | Pin-Cotter |
| 26 | 1-634500 | 1 | Brake Lever ASM |
| 26:2 | 1-633268 | 1 | Grip-Lever |
| 27 | 1-513140 | 2 | Bearing-Control |
| 28 | 116-1399 | 2 | Locknut |
| 29 | 32128-49 | 8 | Nut-HHF |
| 31 | 114-1184 | 4 | Spacer-Wheel, Short |
| 32 | 323-4 | 4 | Screw-HH |

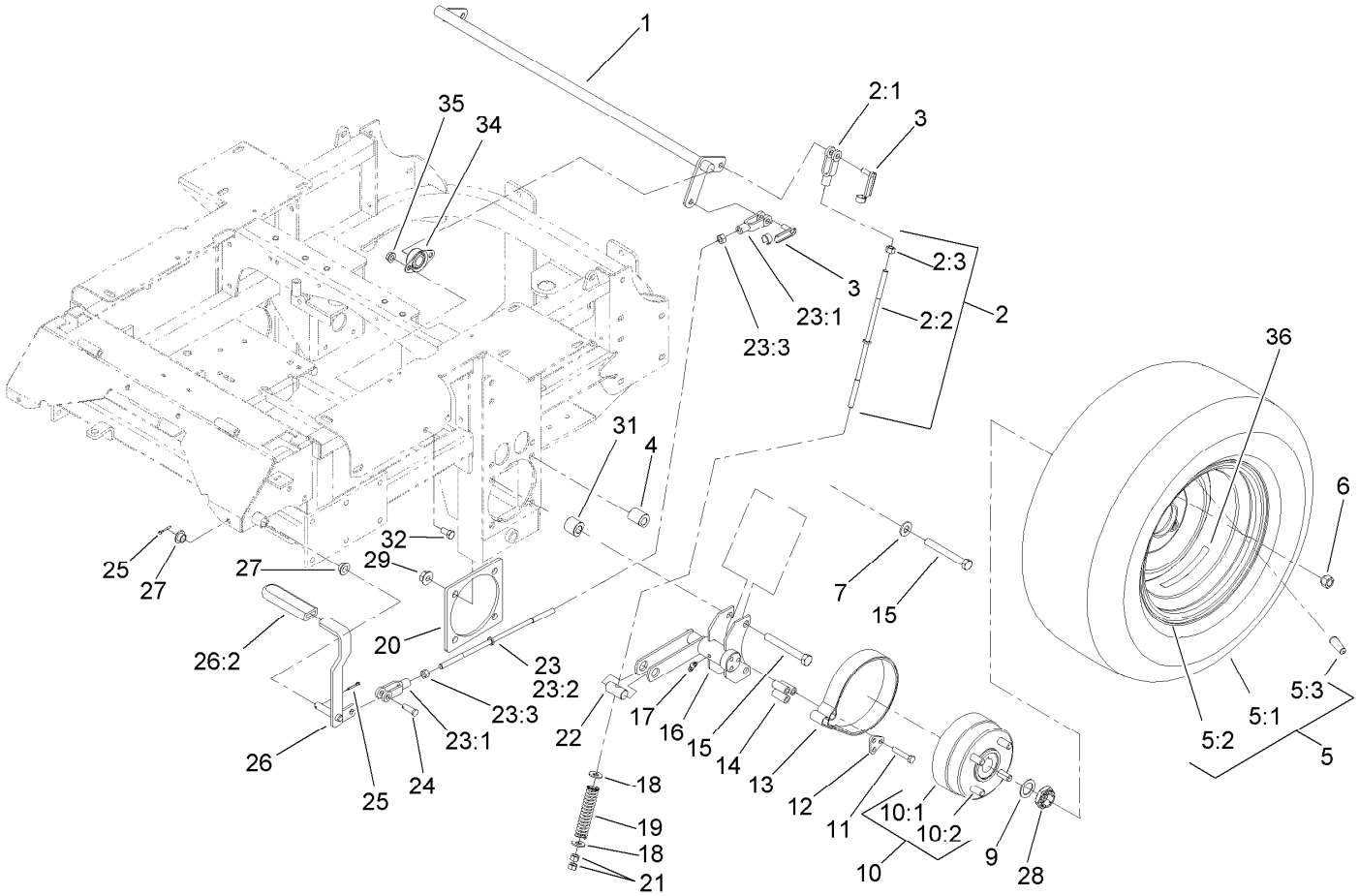


# Main Frame and Rear Wheel Assembly (continued)

| Ref. | Part Number | Qty. | Description |
|---|---|---|---|
| 34 | 1-633102 | 2 | Bearing-Flange, Side |
| 35 | 3290-357 | 4 | Nut-HHF, Whiz |
| 36 | 126-2055 | 2 | Decal-Torque, Wheel Hub Lug |

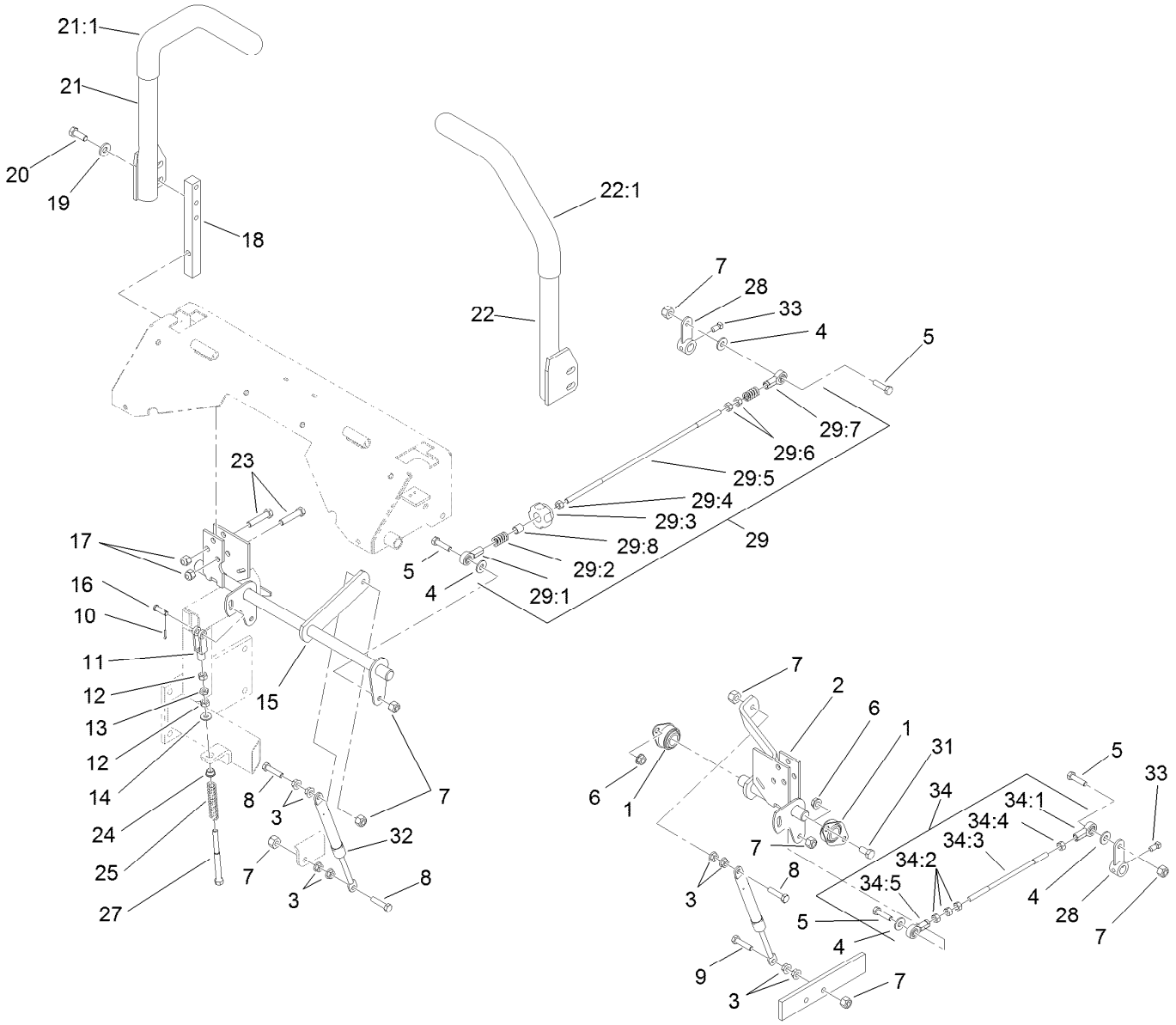


# Hydro Control Assembly

| Ref. | Part Number | Qty. | Description |
|---|---|---|---|
| 1 | 1-633102 | 4 | Bearing-Flange, Side |
| 2 | 107-3480 | 1 | Control-Motion, LH |
| 3 | 32128-20 | 10 | Nut-HF |
| 4 | 3256-3 | 4 | Washer-Flat |
| 5 | 322-6 | 4 | Screw-HH |
| 6 | 3290-357 | 6 | Nut-HHF, Whiz |
| 7 | 3296-29 | 8 | Nut-Lock, NI |
| 8 | 1-403180 | 3 | Screw-HH |
| 9 | 322-41 | 1 | Screw-HH |
| 10 | 3272-5 | 2 | Pin-Cotter |
| 11 | 1-303105 | 2 | Yoke-Adjustable |
| 12 | 3219-2 | 4 | Nut-Hex |
| 13 | 3220-2 | 2 | Nut-Jam |
| 14 | 3256-2 | 2 | Washer-Flat |
| 15 | 107-3481 | 1 | Control-Motion, RH |
| 16 | 1-808280 | 2 | Pin-Clevis |
| 17 | 3296-39 | 6 | Nut-Lock, NI |
| 18 | 103-0407 | 2 | Arm-Shaft, Control |
| 19 | 98-5975 | 4 | Washer-Belleville |
| 20 | 323-6 | 4 | Screw-HH |
| 21 | 108-7237 | 1 | RH Lever ASM |

| Ref. | Part Number | Qty. | Description |
|---|---|---|---|
| 21:1 | 106-9987 | 1 | Grip-Control, Motion |
| 22 | 108-7238 | 1 | LH Lever ASM |
| 22:1 | 106-9987 | 1 | Grip-Control, Motion |
| 23 | 323-9 | 6 | Screw-HH |
| 24 | 1-603735 | 2 | Bushing-Flanged |
| 25 | 1-603807 | 2 | Spring-Return, Neutral |
| 27 | 1-603737 | 2 | Bolt-Return, Neutral |
| 28 | 107-3470-03 | 2 | Arm-Control, Hydraulic |
| 29 | 107-3474 | 1 | RH Control Rod ASM |
| 29:1 | 1-543017 | 1 | Balljoint-RH |
| 29:2 | 1-323245 | 2 | Spring-Compression |
| 29:3 | 103-3060 | 1 | Knob-Tracking |
| 29:4 | 3219-2 | 1 | Nut-Hex |
| 29:5 | 107-3472 | 1 | Rod-Control, RH |
| 29:6 | 1-804524 | 2 | Nut |
| 29:7 | 1-633152 | 1 | Balljoint-LH |
| 29:8 | 103-1166 | 1 | Spacer-Tube, Pump Link |
| 31 | 323-4 | 6 | Screw-HH |
| 32 | 109-2339 | 2 | Damper-Control, Motion |
| 33 | 1-803022 | 2 | Screw-Set |
| 34 | 107-3475 | 1 | LH Control Rod ASM |

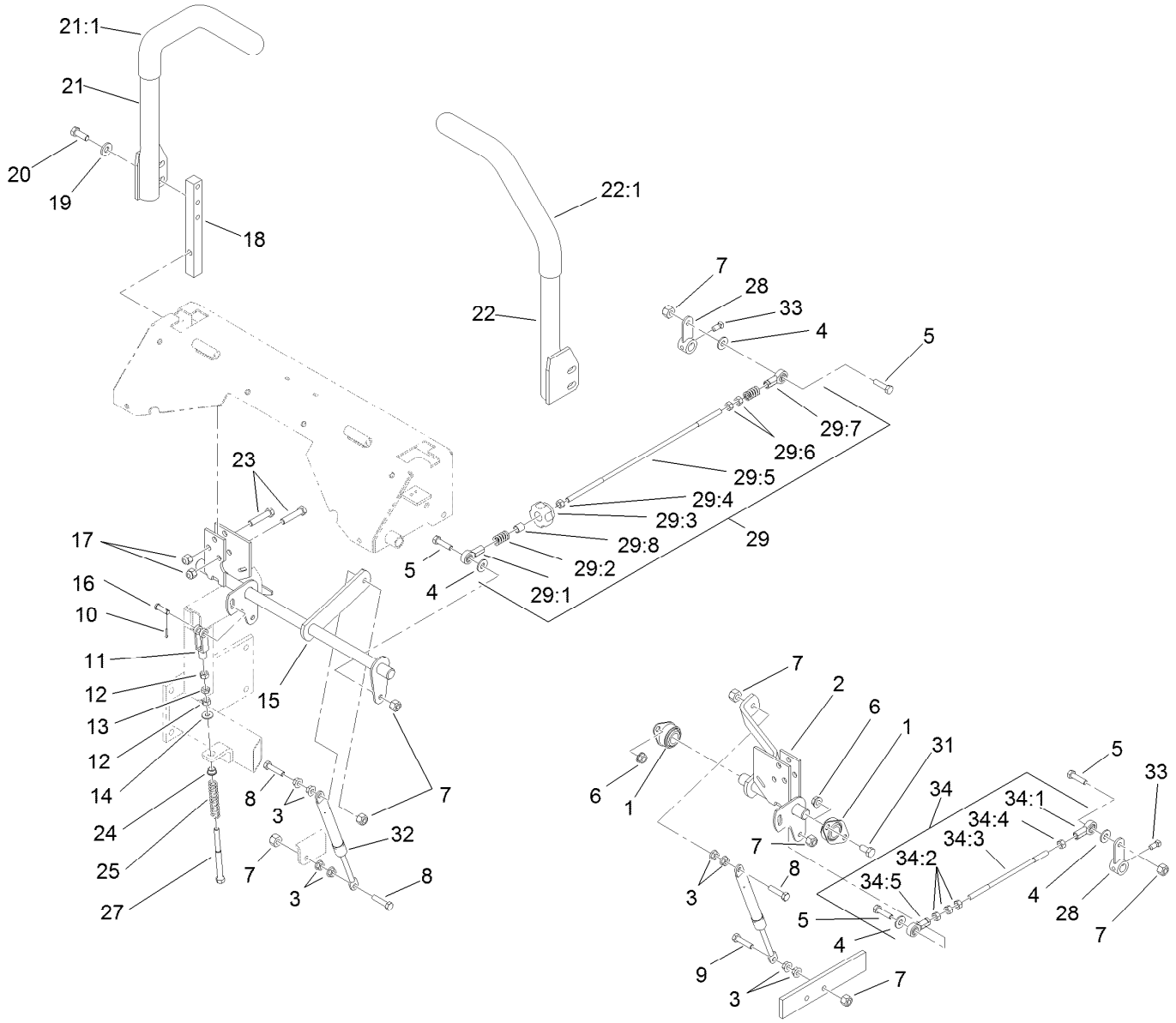


# Hydro Control Assembly (continued)

| Ref. | Part Number | Qty. | Description |
|---|---|---|---|
| 34:1 | 1-543017 | 1 | Balljoint-RH |
| 34:2 | 3219-2 | 3 | Nut-Hex |
| 34:3 | 107-3473 | 1 | Rod-Control, LH |
| 34:4 | 1-804524 | 1 | Nut |
| 34:5 | 1-633152 | 1 | Balljoint-LH |

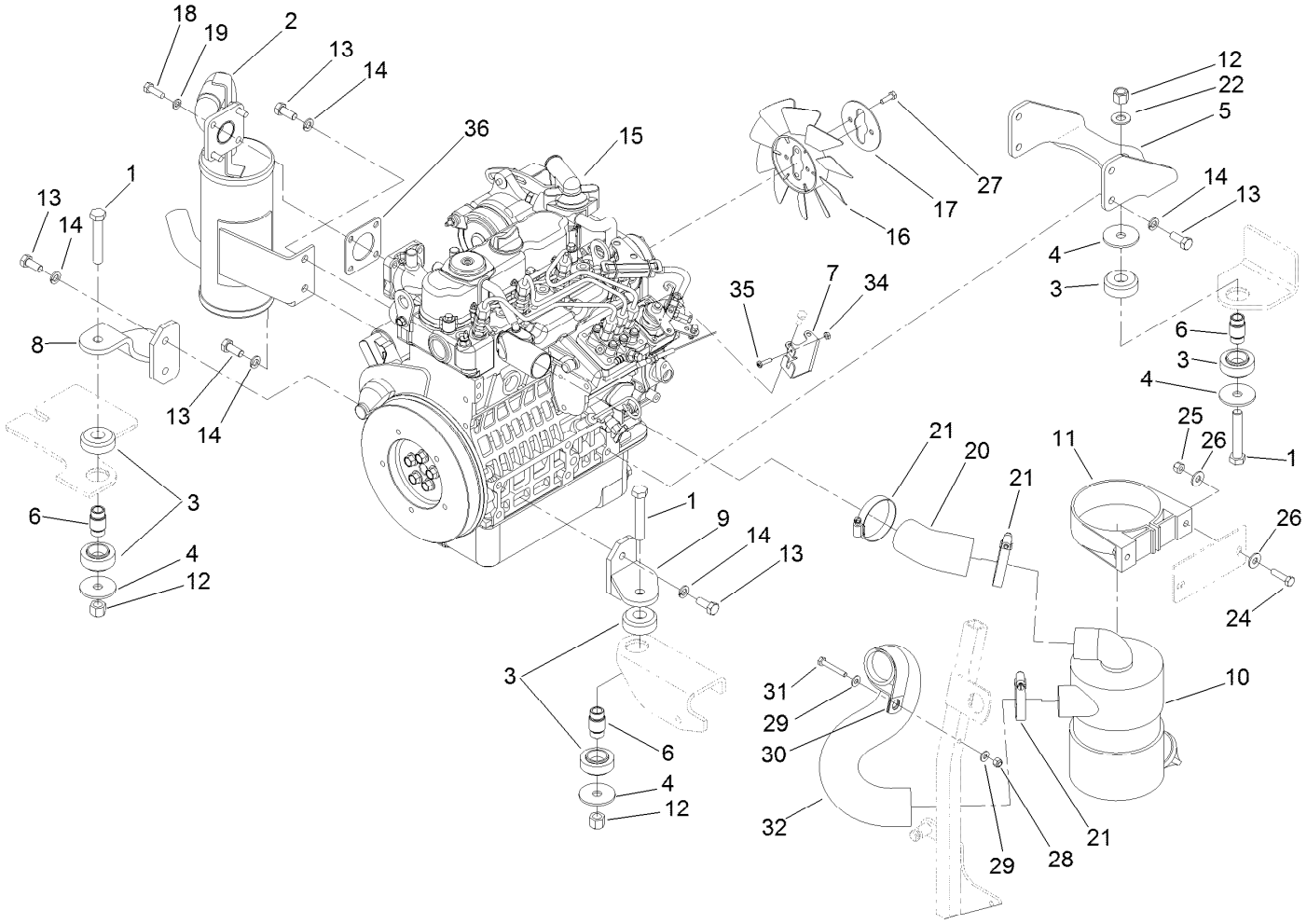


# Engine, Exhaust and Air Intake Assembly

| Ref. | Part Number | Qty. | Description |
|---|---|---|---|
| 1 | 325-12 | 3 | Screw-HH |
| 2 | 107-9909 | 1 | Muffler |
| 3 | 107-9914 | 3 | Mount-Isolation ASM |
| 4 | 55-7960 | 4 | Washer-Large |
| 5 | 107-9917-03 | 1 | Bracket-Engine Mount, Rear |
| 6 | 110-0300 | 3 | Spacer |
| 7 | 108-5922 | 1 | Bracket-Support, Throttle |
| 8 | 107-9920-03 | 1 | Support-Engine, RH |
| 9 | 107-9930-03 | 1 | Support-Engine, LH |
| 10 | 93-2190 | 1 | Air Cleaner ASM |
| 11 | 95-5806 | 1 | Bracket-Mounting |
| 12 | 3296-23 | 3 | Nut-Lock, NI |
| 13 | 43-0090 | 10 | Screw-HH |
| 14 | 42-9600 | 10 | Washer-Lock, Spring |
| 15 | 127-9652 | 1 | Engine-Kubota, D902-E4B-Tor-1 |
| 16 | 110-0814 | 1 | Fan |
| 17 | 110-0816 | 1 | Plate-Reatainer, Fan |

| Ref. | Part Number | Qty. | Description |
|---|---|---|---|
| 18 | 33114-025 | 4 | Screw-HH |
| 19 | 3253-4 | 4 | Washer-Lock |
| 20 | 108-5371 | 1 | Hose-Intake, Air Cleaner |
| 21 | 1-643009 | 3 | Clamp-Hose |
| 22 | 3256-26 | 1 | Washer-Flat |
| 24 | 322-6 | 2 | Screw-HH |
| 25 | 3296-29 | 2 | Nut-Lock, NI |
| 26 | 3256-23 | 4 | Washer-Flat |
| 27 | 33113-020 | 2 | Screw-HH |
| 28 | 3296-42 | 1 | Nut-Lock, NI |
| 29 | 3256-22 | 2 | Washer-Flat |
| 30 | 1-643241 | 1 | Clip-Loom |
| 31 | 321-10 | 1 | Screw-HH |
| 32 | 108-5370 | 1 | Hose-Intake, Engine |
| 34 | 3217-26 | 1 | Nut-Hex |
| 35 | 110-0863 | 1 | Screw-Torx |
| 36 | 99-8343 | 1 | Gasket-Muffler |

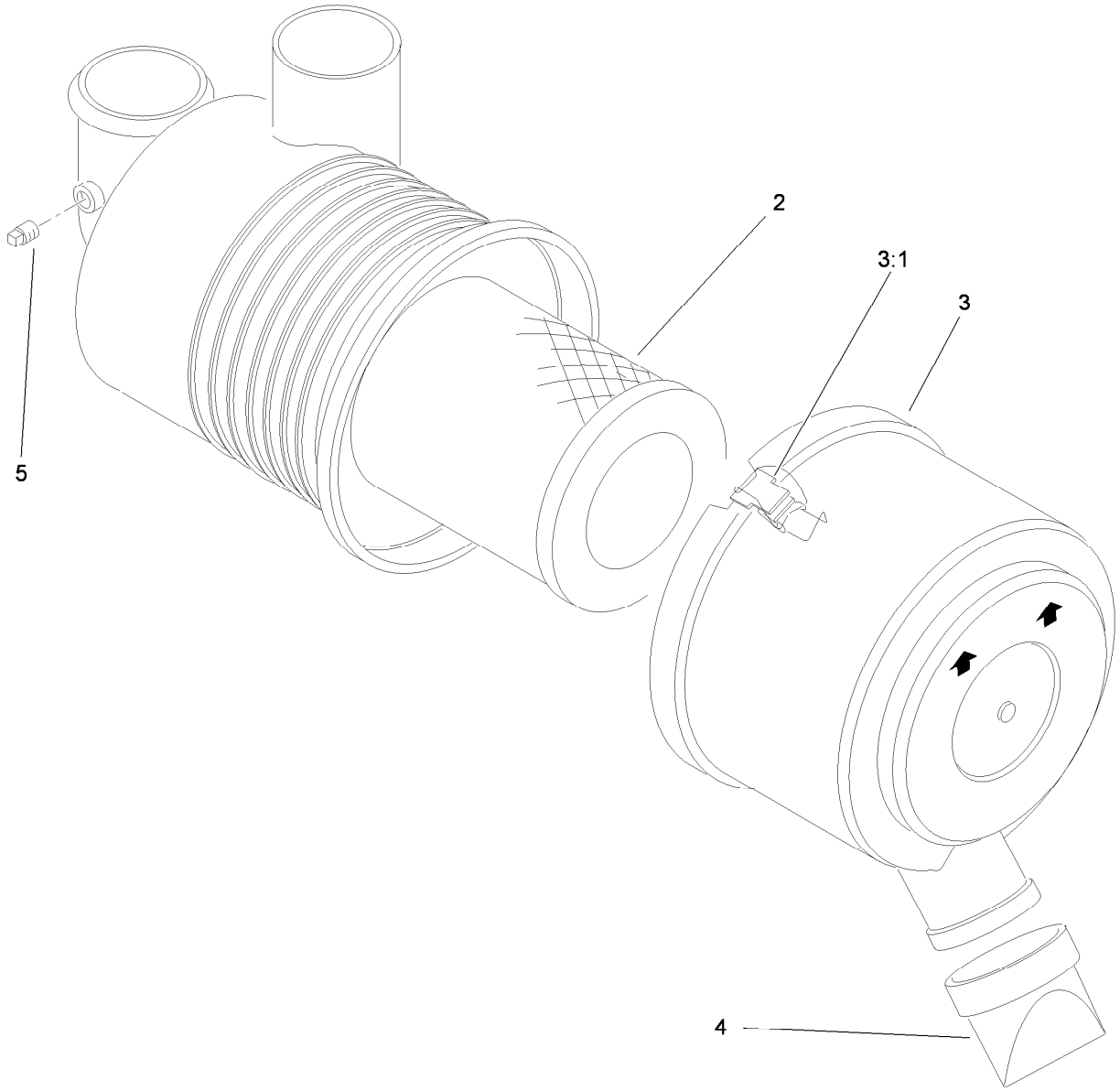


# Air Cleaner Assembly No. 93-2190

| *Ref.* | *Part Number* | *Qty.* | *Description* |
|---|---|---|---|
| 2 | 108-3811 | 1 | Filter-Air |
| 3 | 94-3652 | 1 | Cover ASM |
| 3:1 | 1-643283 | 2 | Latch-Cleaner, Air |
| 4 | 87-9400 | 1 | Valve-Vacuator |
| 5 | 285-17 | 1 | Plug-Pipe |

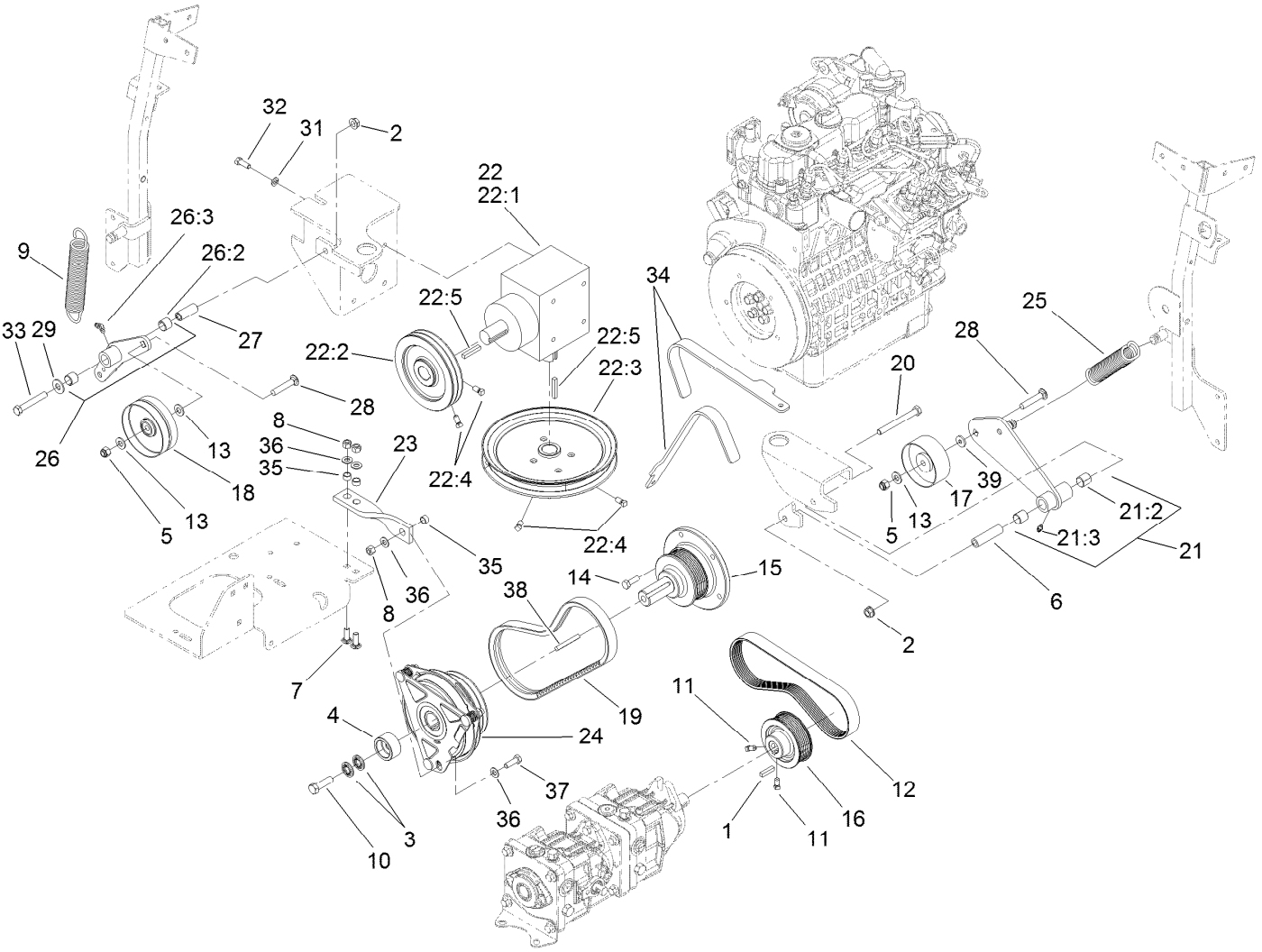


# Hydro and Gearbox Assembly

| Ref. | Part Number | Qty. | Description |
|---|---|---|---|
| 1 | 5-0698 | 1 | Key |
| 2 | 3290-357 | 2 | Nut-HHF, Whiz |
| 3 | 1-603610 | 2 | Washer-Spring |
| 4 | 114-8152 | 1 | Retainer-Clutch |
| 5 | 3296-39 | 2 | Nut-Lock, NI |
| 6 | 1-603384 | 1 | Bushing-Pivot, Idler |
| 7 | 3230-22 | 2 | Screw-CARR |
| 8 | 3296-29 | 3 | Nut-Lock, NI |
| 9 | 119-0392 | 1 | Spring-Extension |
| 10 | 3212-6 | 1 | Screw-HH |
| 11 | 1-803022 | 2 | Screw-Set |
| 12 | 107-9910 | 1 | Belt-V |
| 13 | 3256-24 | 4 | Washer-Flat |
| 14 | 33114-025 | 5 | Screw-HH |
| 15 | 112-2335 | 1 | Shaft-Stub |
| 16 | 108-5976 | 1 | Pulley |
| 17 | 108-5910 | 1 | Pulley-Flat |
| 18 | 110-0803 | 1 | Pulley-Flat |

| Ref. | Part Number | Qty. | Description |
|---|---|---|---|
| 19 | 110-0805 | 1 | Belt-V |
| 20 | 323-15 | 1 | Screw-HH |
| 21 | 108-5939 | 1 | Pump Idler Arm ASM |
| 21:2 | 1-513034 | 2 | Sleeve-Bearing |
| 21:3 | 302-5 | 1 | Fitting-Grease |
| 22 | | 1 | Gearbox ASM ● |
| 22:1 | 107-9887 | 1 | Gearbox-90 DEG |
| 22:2 | 108-5912 | 1 | Pulley |
| 22:3 | 110-0893 | 1 | Pulley |
| 22:4 | 1-803022 | 4 | Screw-Set |
| 22:5 | 67-7490 | 2 | Key-Square |
| 23 | 112-1781 | 1 | Strap-Stop, Clutch |
| 24 | 112-2320 | 1 | Clutch-Magnetic |
| 25 | 119-0394 | 1 | Spring-Extension |
| 26 | 112-2354 | 1 | Gearbox Idler ASM (W/Bearings) |
| 26:2 | 103-4681 | 2 | Sleeve-Bearing |
| 26:3 | 1481 | 1 | Fitting-Grease |

● Not serviced separately

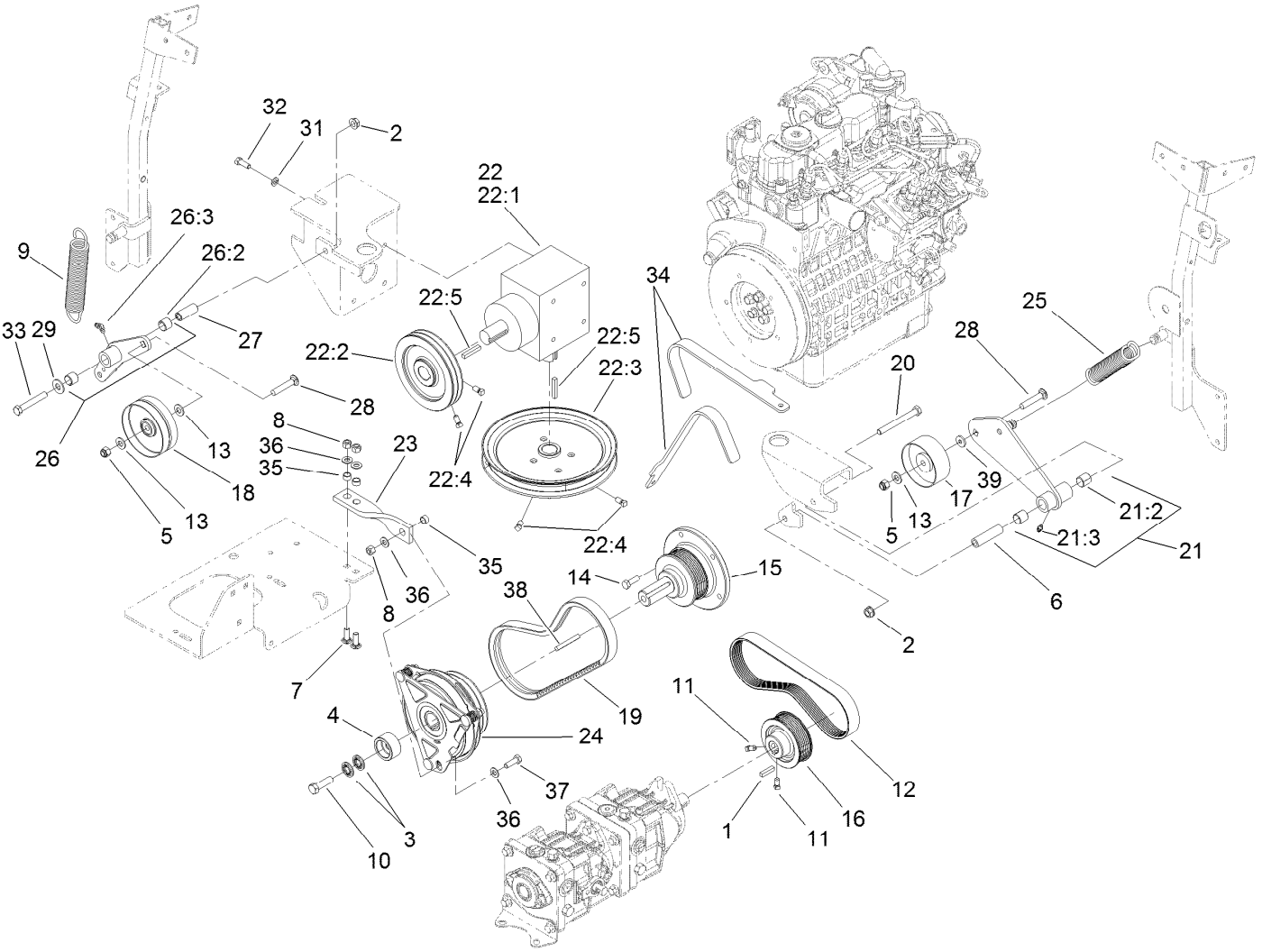


# Hydro and Gearbox Assembly (continued)

| Ref. | Part Number | Qty. | Description |
|---|---|---|---|
| 27 | 1-603044 | 1 | Bushing |
| 28 | 3231-6 | 2 | Screw-CARR |
| 29 | 3256-4 | 1 | Washer-Flat |
| 31 | 3253-4 | 4 | Washer-Lock |
| 32 | 322-4 | 4 | Screw-HH |
| 33 | 323-12 | 1 | Screw-HH |

| Ref. | Part Number | Qty. | Description |
|---|---|---|---|
| 34 | 110-0876 | 1 | Tool-Alignment, Pulley |
| 35 | 65-9820 | 3 | Spacer |
| 36 | 3256-23 | 4 | Washer-Flat |
| 37 | 322-5 | 1 | Screw-HH |
| 38 | 5-1336 | 1 | Key-Square |
| 39 | 1-373034 | 1 | Washer |

● Not serviced separately

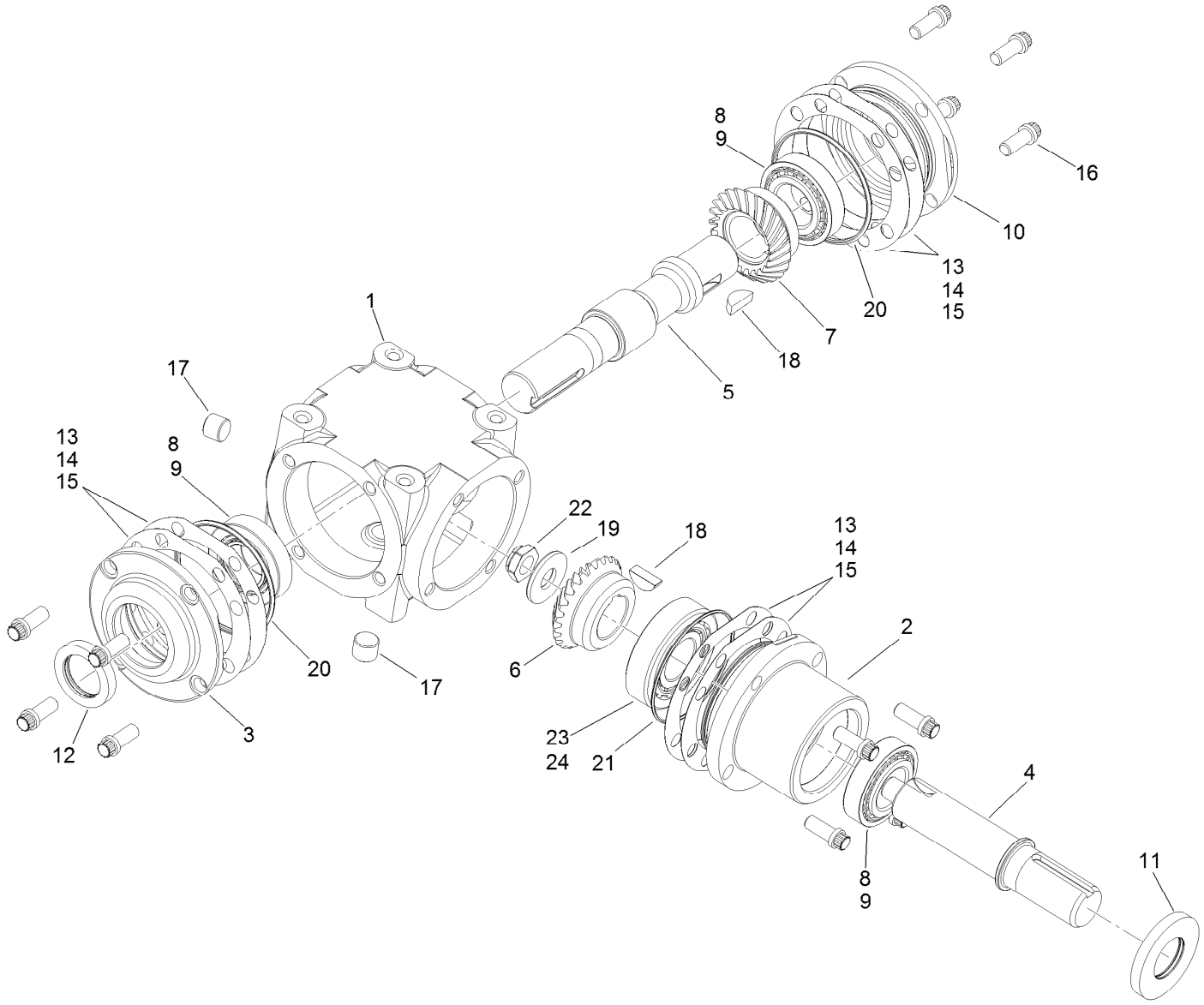


# Gearbox Assembly No. 107-9887

| Ref. | Part Number | Qty. | Description |
|---|---|---|---|
| 1 | 110-0843 | 1 | Case |
| 2 | 110-0853 | 1 | Housing-Pinion |
| 3 | 100-4566 | 1 | Cap-End, Open |
| 4 | 110-0844 | 1 | Shaft-Pinion |
| 5 | 110-0845 | 1 | Shaft-Cross |
| 6 | 110-0847 | 1 | Gear-Shaft, Cross |
| 7 | 110-0846 | 1 | Gear-Pinion |
| 8 | 110-0848 | 3 | Bearing-Cup |
| 9 | 110-0849 | 3 | Bearing-Cone |
| 10 | 100-4574 | 1 | Cap-End, Closed |
| 11 | 100-4575 | 1 | Seal |
| 12 | 110-0850 | 1 | Seal-Shaft, Cross |

| Ref. | Part Number | Qty. | Description |
|---|---|---|---|
| 13 | 100-4591 | 1 | Shim-Brown, .010In |
| 14 | 100-4592 | 1 | Shim-Blue, .005In |
| 15 | 100-4593 | 1 | Shim-Green, .003In |
| 16 | 100-4578 | 12 | Screw |
| 17 | 100-4579 | 2 | Plug |
| 18 | 3257-33 | 2 | Key-Woodruff |
| 19 | 100-4581 | 1 | Washer |
| 20 | 100-4582 | 2 | O-Ring |
| 21 | 110-0851 | 1 | O-Ring |
| 22 | 110-0852 | 1 | Nut Lock |
| 23 | 100-5817 | 1 | Bearing-Cup |
| 24 | 100-5816 | 1 | Bearing-Cone |

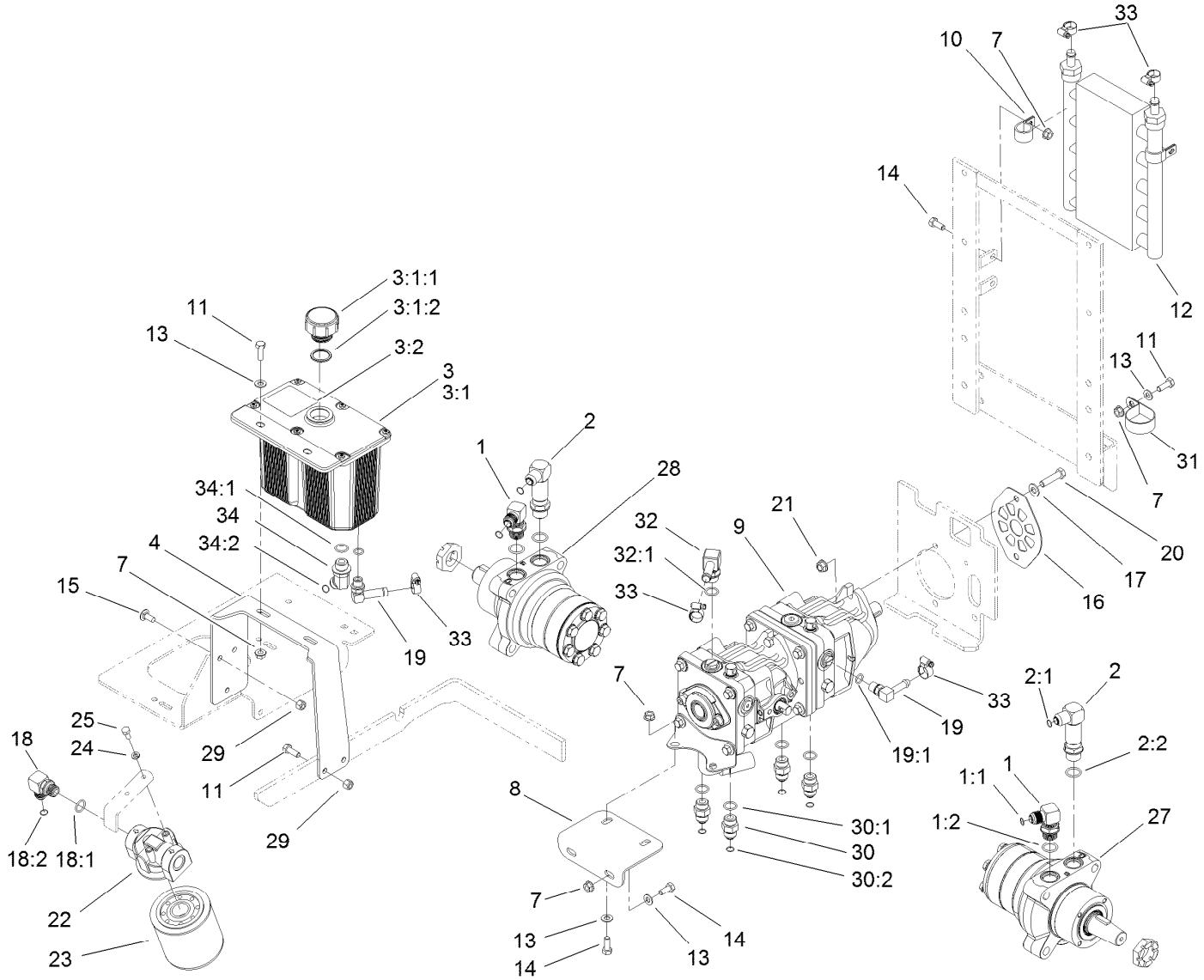


# Hydraulic Tank, Pump and Motor Assembly

| Ref. | Part Number | Qty. | Description |
|---|---|---|---|
| 1 | 1-633605 | 2 | Fitting-HYD, 90 DEG |
| 1:1 | 1-603992 | 1 | O-Ring |
| 1:2 | 237-80 | 1 | O-Ring |
| 2 | 108-5323 | 2 | Fitting-Elbow-90 |
| 2:1 | 1-603992 | 1 | O-Ring |
| 2:2 | 237-80 | 1 | O-Ring |
| 3 | 108-5320 | 1 | Hydraulic Tank ASM |
| 3:1 | | 1 | Tank-Hydraulic ● |
| 3:1:1 | 103-1948 | 1 | Cap-Reservoir, HYD |
| 3:1:2 | 103-1949 | 1 | Gasket-Cap |
| 3:2 | 115-4212 | 1 | Decal-Warning |
| 4 | 108-5352-03 | 1 | Bracket-Tank, Hydraulic |
| 7 | 32128-20 | 11 | Nut-HF |
| 8 | 107-3462-03 | 1 | Bracket-Pump, Front |
| 9 | 107-9885 | 1 | Tandem Pump ASM |
| 10 | 110-0824 | 4 | R-Clamp |
| 11 | 322-5 | 4 | Screw-HH |
| 12 | 114-8168 | 1 | Cooler-Oil, Hydro |

| Ref. | Part Number | Qty. | Description |
|---|---|---|---|
| 13 | 3256-23 | 7 | Washer-Flat |
| 14 | 322-3 | 8 | Screw-HH |
| 15 | 3230-23 | 3 | Screw-CARR |
| 16 | 108-5367-03 | 1 | Plate-Shield, Pump |
| 17 | 3256-24 | 2 | Washer-Flat |
| 18 | 103-2153 | 1 | Fitting-90 DEG |
| 18:1 | 1-603920 | 1 | O-Ring |
| 18:2 | 1-603992 | 1 | O-Ring |
| 19 | 109-6449 | 2 | Fitting-Elbow, 90 |
| 19:1 | 237-42 | 1 | O-Ring |
| 20 | 323-8 | 2 | Screw-HH |
| 21 | 3290-357 | 2 | Nut-HHF, Whiz |
| 22 | 86-9080 | 1 | Head-Filter |
| 23 | 67-8110 | 1 | Cartridge-Filter, Oil |
| 24 | 1-805004 | 2 | Washer-Lock |
| 25 | 321-3 | 2 | Screw-HH |
| 27 | 112-8357 | 1 | HYD Motor ASM (CCW) |
| 28 | 112-8358 | 1 | HYD Motor ASM (CW) |

● Not serviced separately

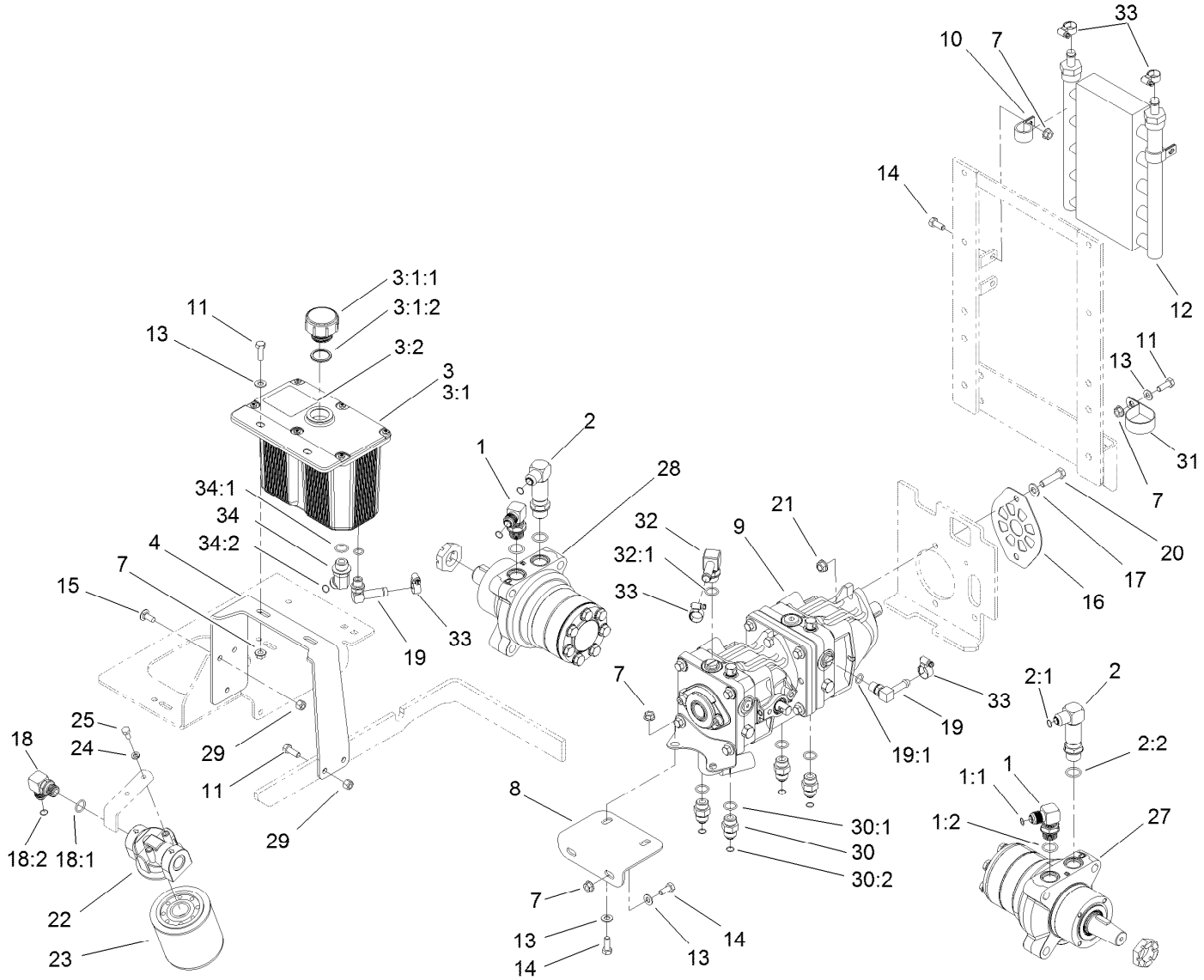


# Hydraulic Tank, Pump and Motor Assembly (continued)

| Ref. | Part Number | Qty. | Description |
|---|---|---|---|
| 29 | 3296-29 | 4 | Nut-Lock, NI |
| 30 | 1-603990 | 4 | Fitting-Straight |
| 30:1 | 1-603920 | 1 | O-Ring |
| 30:2 | 1-603992 | 1 | O-Ring |
| 31 | 2412-147 | 1 | Clamp-R |
| 32 | 108-5316 | 1 | Fitting-Elbow, 90 DEG |
| 32:1 | 237-79 | 1 | O-Ring |
| 33 | 109-6801 | 5 | Clamp-Hose |
| 34 | 1-523221 | 1 | Fitting-HYD, 45 DEG |
| 34:1 | 1-603920 | 1 | O-Ring |
| 34:2 | 1-603992 | 1 | O-Ring |

● Not serviced separately

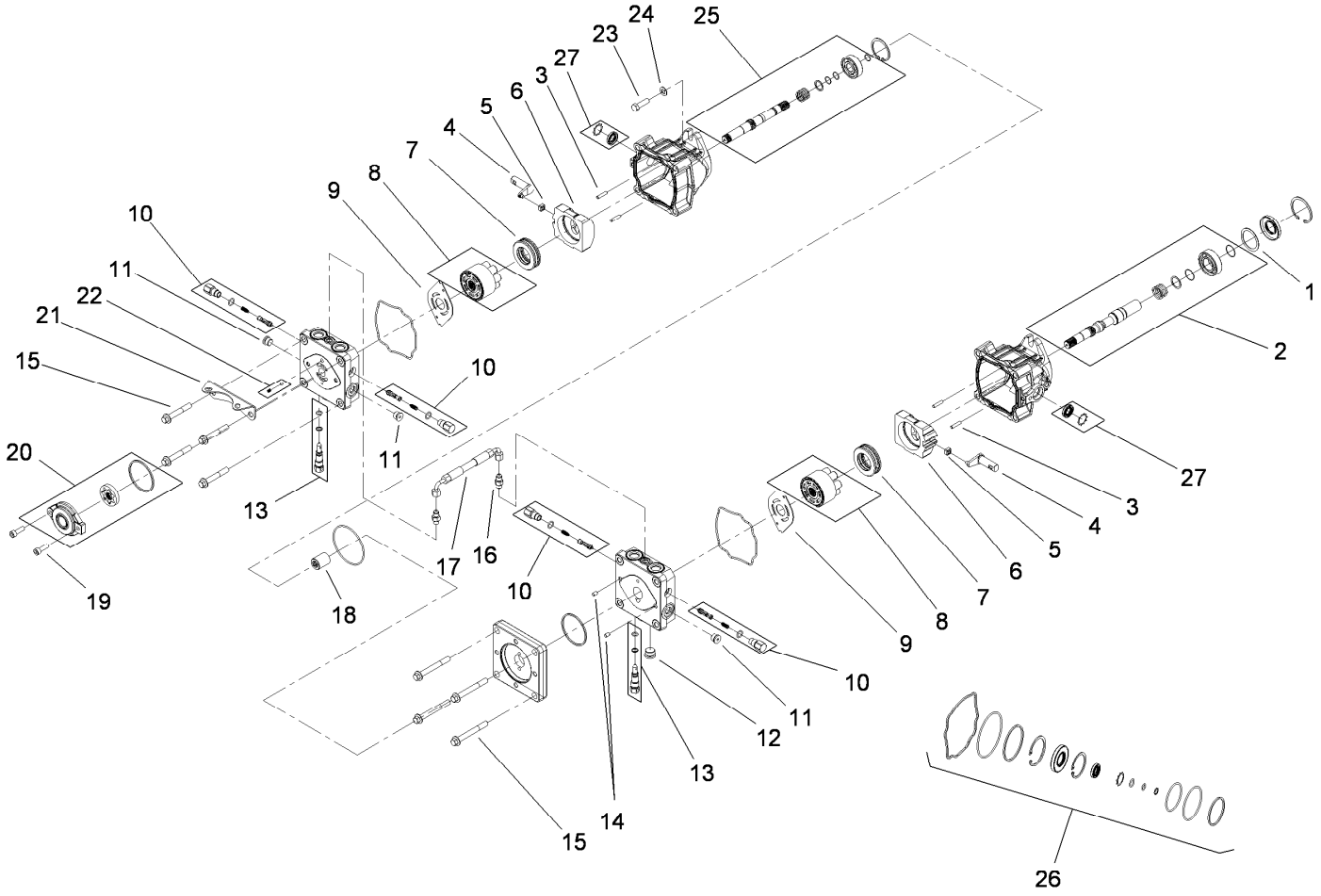


# Tandem Pump Assembly No. 107-9885

| Ref. | Part Number | Qty. | Description |
|---|---|---|---|
| 1 | 112-4168 | 1 | Spacer |
| 2 | 112-4151 | 1 | Input Pump Shaft Kit |
| 3 | 106-8753 | 4 | Pin-Headless, Straight |
| 4 | 112-4152 | 2 | Arm-Trunnion |
| 5 | 94-1910 | 2 | Guide-Slot |
| 6 | 112-4153 | 2 | Swashplate |
| 7 | 112-4154 | 2 | Bearing-Thrust |
| 8 | 108-2112 | 2 | Cylinder Block Kit |
| 9 | 108-6801 | 2 | Plate-Valve |
| 10 | 112-4155 | 4 | Shock Valve Kit |
| 11 | 104-2189 | 3 | Plug-Thread, Straight |
| 12 | 112-4156 | 1 | Plug-Steel |
| 13 | 106-8759 | 2 | Bypass Valve Kit |
| 14 | 104-2170 | 2 | Pin |

| Ref. | Part Number | Qty. | Description |
|---|---|---|---|
| 15 | 112-4157 | 8 | Bolt |
| 16 | 117-7842 | 2 | Fitting-Straight |
| 17 | 117-7843 | 1 | Hose ASM |
| 18 | 112-4160 | 1 | Coupling |
| 19 | 112-4161 | 2 | Bolt |
| 20 | 112-4162 | 1 | Charge Pump Kit |
| 21 | 112-4163 | 1 | Bracket-Support, Pump |
| 22 | 112-4164 | 1 | Charge Relief Kit |
| 23 | 112-4165 | 2 | Bolt-HSH |
| 24 | 112-4166 | 2 | Washer |
| 25 | 112-4167 | 1 | Second Pump Shaft Kit |
| 26 | 112-4150 | 1 | Overhaul Seal Kit |
| 27 | 114-8155 | 1 | Trunnion Seal Kit |

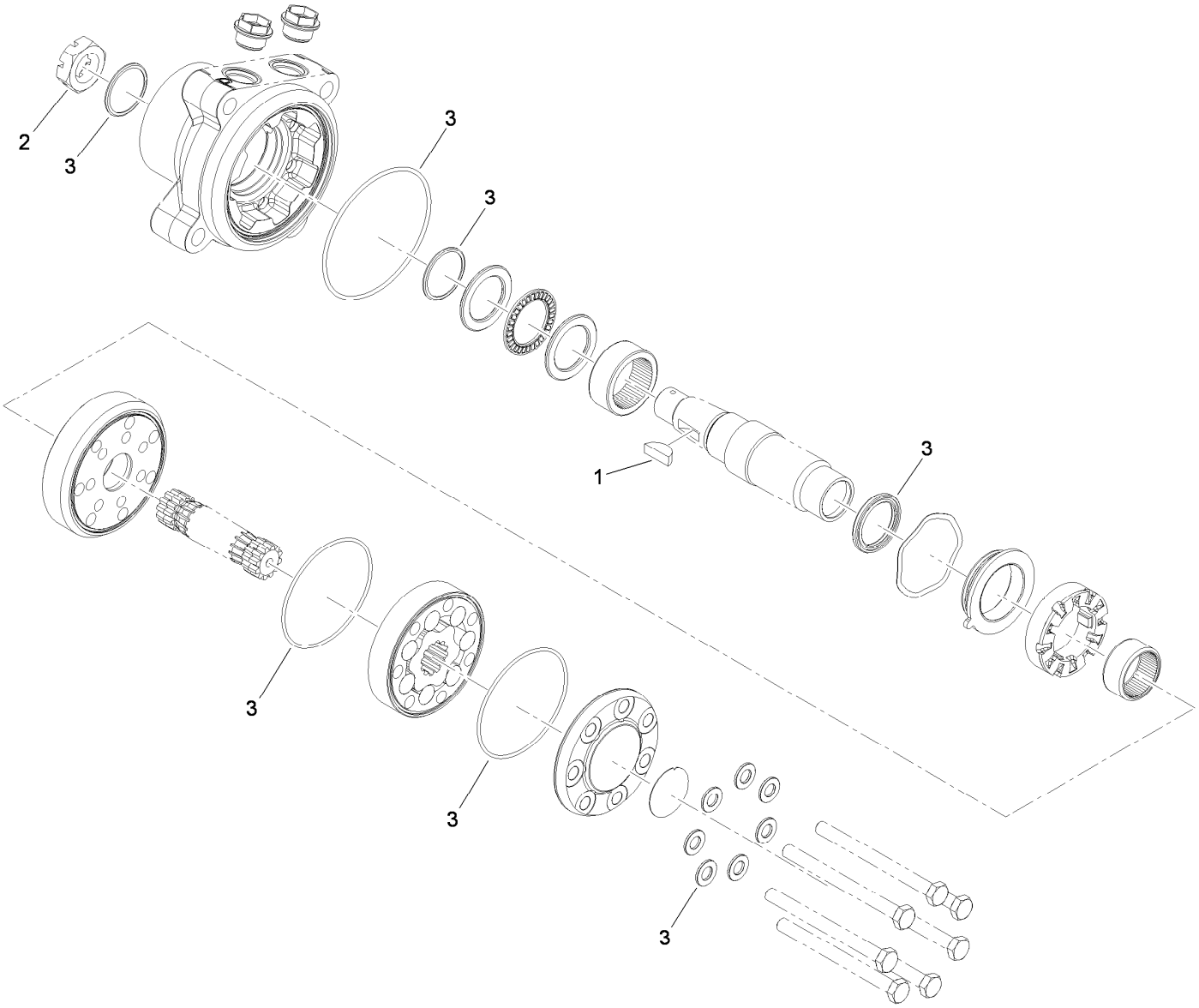


# Hydraulic Motor Assembly No. 112-8358 (CW)

| *Ref.* | *Part Number* | *Qty.* | *Description* |
|---|---|---|---|
| 1 | 3257-42 | 1 | Key-Woodruff |
| 2 | 1-809036 | 1 | Nut-HH |
| 3 | 109-5966 | 1 | Wheel Motor Seal Kit |

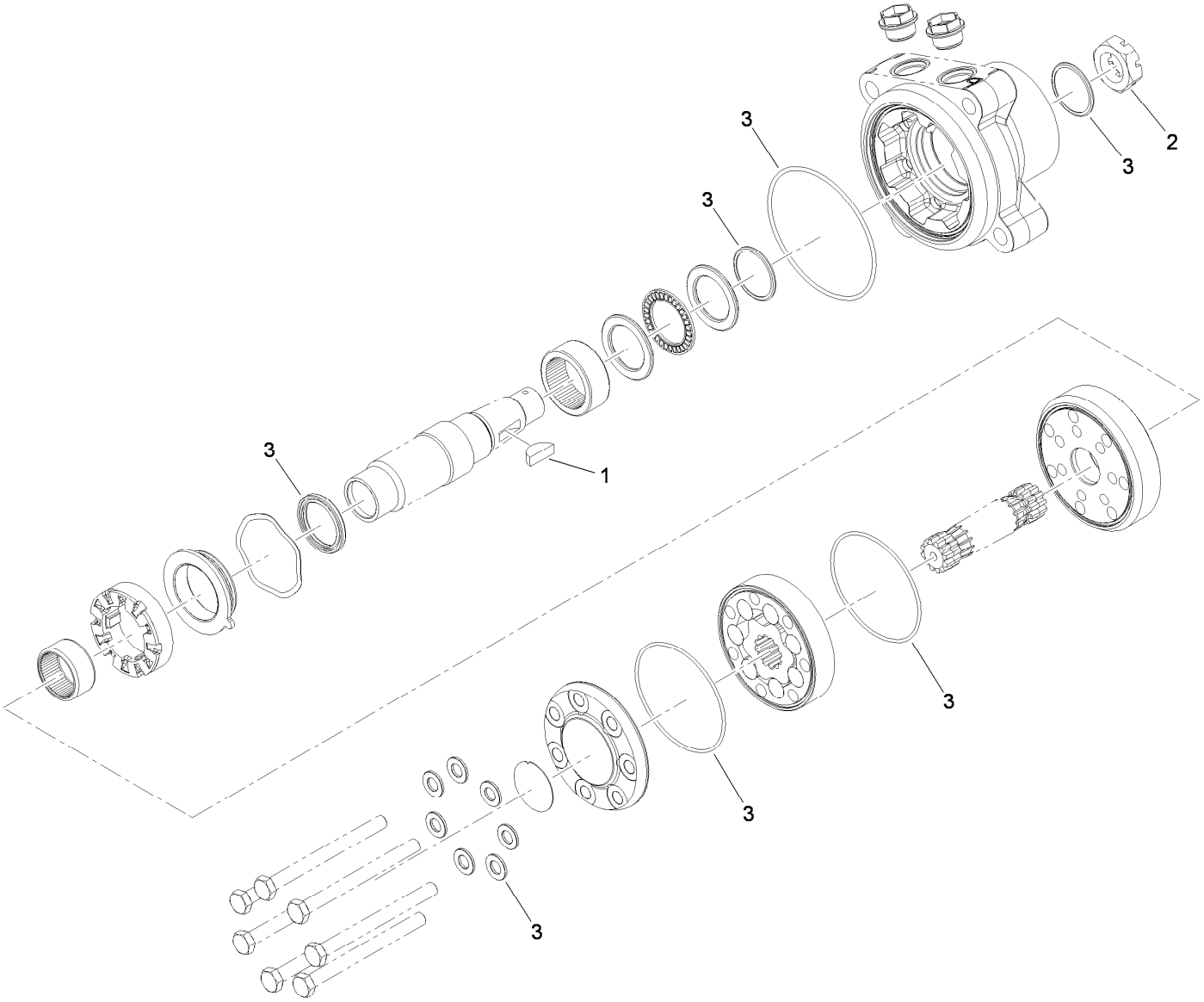


# Hydraulic Motor Assembly No. 112-8357 (CCW)

| *Ref.* | *Part Number* | *Qty.* | *Description* |
|---|---|---|---|
| 1 | 3257-42 | 1 | Key-Woodruff |
| 2 | 1-809036 | 1 | Nut-HH |
| 3 | 109-5966 | 1 | Wheel Motor Seal Kit |

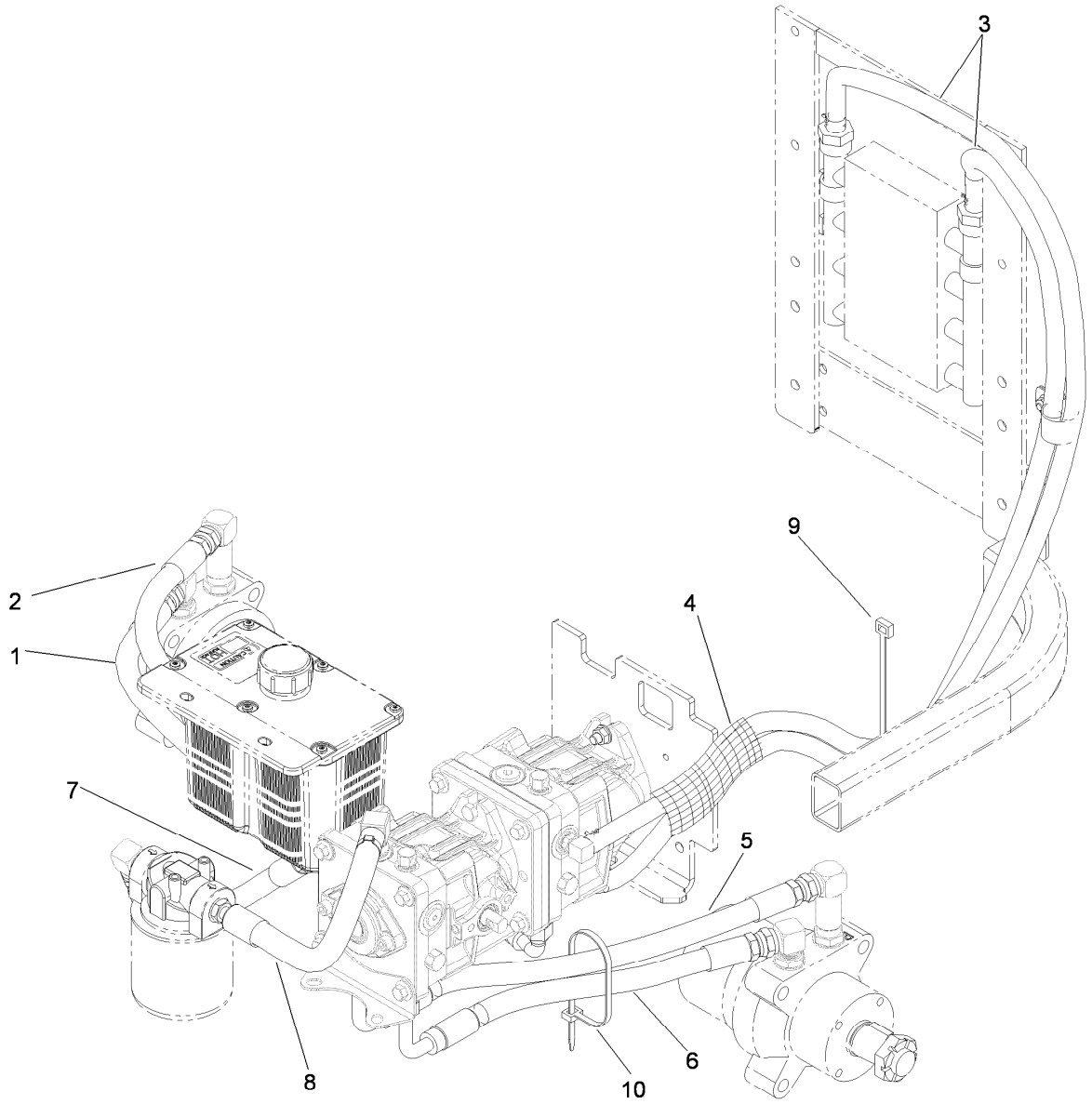


# Hydraulic Hose System Assembly

| *Ref.* | *Part Number* | *Qty.* | *Description* |
|---|---|---|---|
| 1 | 107-3495 | 1 | Hydraulic Hose ASM |
| 2 | 107-3490 | 1 | Hydraulic Hose ASM |
| 3 | 114-8169 | 2 | Hose-Hydraulic |
| 4 | 114-8201 | 1 | Sleeve-Fabric |
| 5 | 108-5318 | 1 | Hydraulic Hose ASM |
| 6 | 107-3491 | 1 | Hydraulic Hose ASM |
| 7 | 110-3854 | 1 | Hydraulic Hose ASM |
| 8 | 108-5374 | 1 | Hydraulic Hose ASM |
| 9 | 1-303335 | 1 | Tie-Plastic |
| 10 | 1-809066 | 1 | Cable Tie-Plastic |

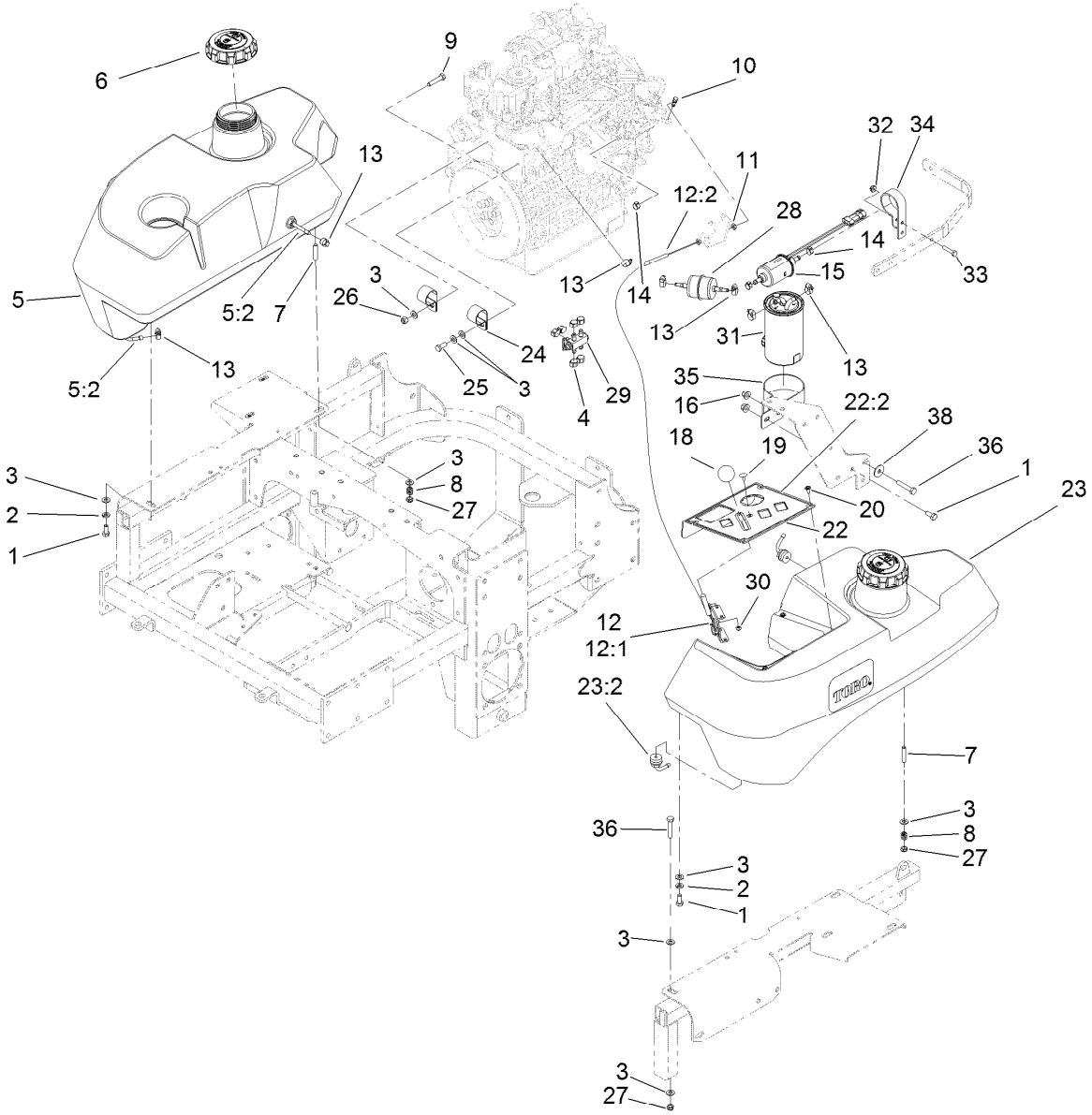


# Fuel System and Throttle Control Assembly

| Ref. | Part Number | Qty. | Description |
|---|---|---|---|
| 1 | 322-3 | 3 | Screw-HH |
| 2 | 1-805005 | 2 | Washer-Lock |
| 3 | 3256-23 | 11 | Washer-Flat |
| 4 | 1-643293 | 6 | Clamp-Hose, Fuel |
| 5 | 114-8221 | 1 | RH Fuel Tank ASM |
| 5:2 | 103-2615 | 2 | Fitting-Fuel, Bulkhead |
| 6 | 114-5062 | 2 | Cap-Biodiesel |
| 7 | 1-633023 | 6 | Stud |
| 8 | 1-633349 | 6 | Spring-Tank, Fuel |
| 9 | 322-7 | 1 | Screw-HH |
| 10 | 108-5928 | 1 | Swivel-Stop, Cable |
| 11 | 3220-1 | 2 | Nut-Jam |
| 12 | 108-5927 | 1 | Cable-Control, Throttle |
| 12:1 | 112-2333 | 1 | Lever-Cable, Throttle |
| 12:2 | 108-6337 | 1 | Cable-Throttle |
| 13 | 2412-108 | 9 | Clamp-Worm |
| 14 | 1-643277 | 3 | Clamp-Hose, Fuel |
| 15 | 110-8806 | 1 | Pump-Fuel |
| 16 | 3296-58 | 2 | Nut-Lock, NI |
| 18 | 1-603175 | 1 | Knob-Ball |

| Ref. | Part Number | Qty. | Description |
|---|---|---|---|
| 19 | 1-807513 | 2 | Bolt-CARR |
| 20 | 109-2661 | 4 | Screw-PPH |
| 22 | 117-0913 | 1 | Control Panel ASM |
| 22:2 | 121-7562 | 1 | Decal-Panel, Control |
| 23 | 114-8222 | 1 | LH Fuel Tank ASM |
| 23:2 | 103-2615 | 2 | Fitting-Fuel, Bulkhead |
| 24 | 1-643312 | 2 | Clip-Loom |
| 25 | 33114-020 | 1 | Screw-HH |
| 26 | 3296-29 | 1 | Nut-Lock, NI |
| 27 | 3296-47 | 6 | Nut-Lock, NI |
| 28 | 112-7836 | 1 | Filter-Inline |
| 29 | 1-643234 | 1 | Valve-Fuel, Dual Flow |
| 30 | 3296-2 | 2 | Nut-Lock, NI |
| 31 | 112-9188 | 1 | Element-Filter, Fuel/Water |
| 32 | 104-7201 | 1 | Nut-Flange, NI |
| 33 | 321-8 | 1 | Screw-HH |
| 34 | 110-8817 | 1 | Bracket-Pump, Fuel |
| 35 | 110-8807 | 1 | Bracket-Filter, Fuel |
| 36 | 322-9 | 1 | Screw-HH |
| 38 | 3256-82 | 1 | Washer-Flat |

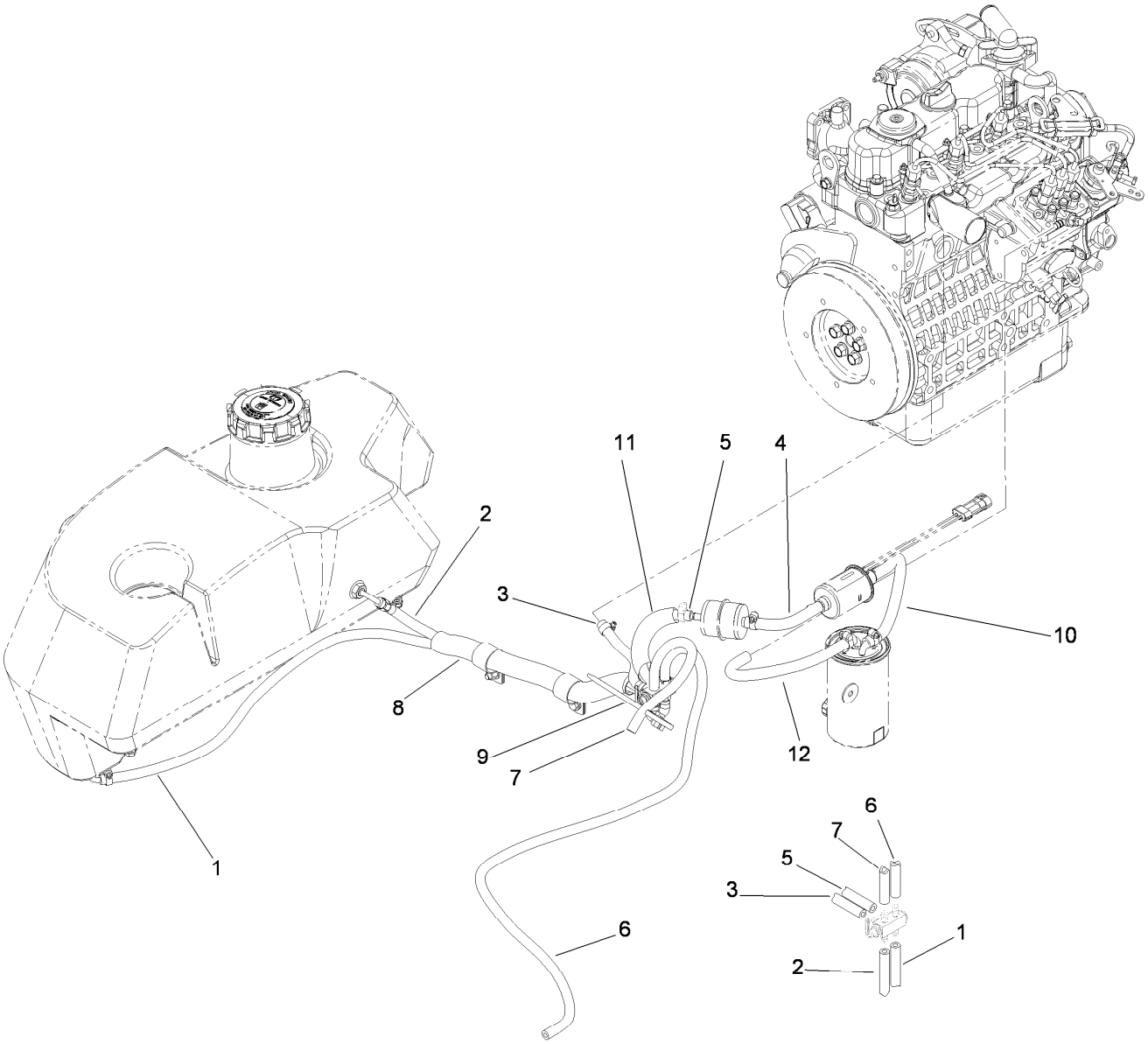


# Fuel Line Assembly

| Ref. | Part Number | Qty. | Description |
|---|---|---|---|
| 1 | 108-5376 | 1 | Hose-Fuel |
| 2 | 109-0301 | 1 | Hose-Fuel |
| 3 | 109-0306 | 1 | Hose-Fuel |
| 4 | 108-3283 | 1 | Hose-Fuel |
| 5 | 109-0303 | 1 | Hose-Fuel |
| 6 | 109-0275 | 1 | Hose-Fuel |
| 7 | 109-0297 | 1 | Hose-Fuel |
| 8 | 108-5377 | 1 | Sleeve-Fabric |
| 9 | 1-303335 | 1 | Tie-Plastic |
| 10 | 110-4124 | 1 | Hose-Fuel |
| 11 | 114-8224 | 1 | Conduit-Fuel Line |
| 12 | 110-4105 | 1 | Hose-Fuel |

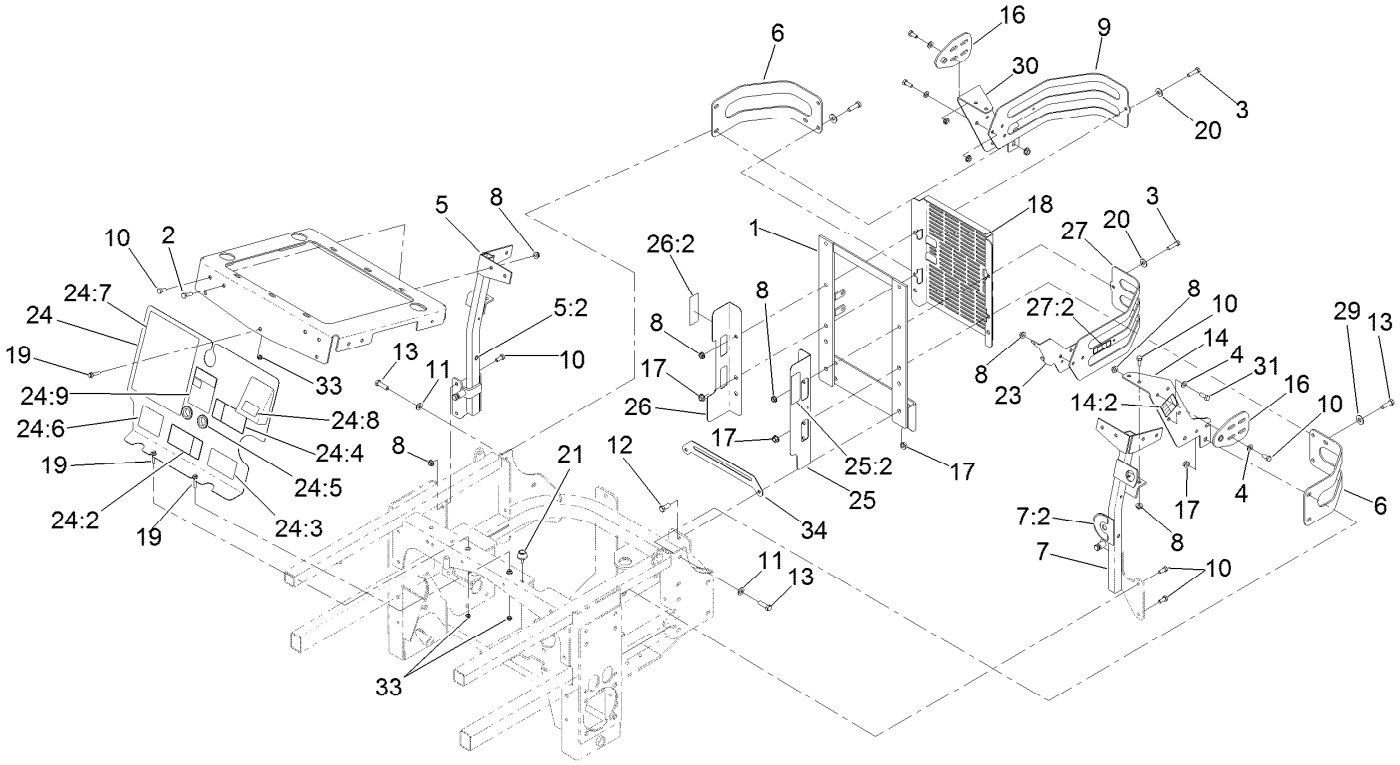


# Engine Housing Assembly

| Ref. | Part Number | Qty. | Description |
|---|---|---|---|
| 1 | 107-9934-03 | 1 | Support-Radiator, Rear |
| 2 | 322-5 | 2 | Screw-HH |
| 3 | 322-6 | 2 | Screw-HH |
| 4 | 3256-23 | 8 | Washer-Flat |
| 5 | 114-1170 | 1 | RH Radiator Brace ASM |
| 5:2 | 32148-11 | 1 | Insert-Threaded |
| 6 | 131-8670-03 | 2 | Guard-Lower, Rear |
| 7 | 110-3870 | 1 | LH Radiator Brace ASM |
| 7:2 | 107-2114 | 1 | Decal-Valve, Fuel |
| 8 | 32128-20 | 22 | Nut-HF |
| 9 | 131-8669-03 | 1 | Guard-Upper, Rear |
| 10 | 322-3 | 14 | Screw-HH |
| 11 | 3256-24 | 3 | Washer-Flat |
| 12 | 323-6 | 3 | Screw-HH |
| 13 | 323-7 | 4 | Screw-HH |
| 14 | 119-6650 | 1 | LH Support Bracket ASM |
| 14:2 | 119-0398 | 1 | Decal-Fuse |
| 16 | 108-5345-03 | 2 | Plate-Pivot, Hood |
| 17 | 3290-357 | 7 | Nut-HHF, Whiz |
| 18 | 112-8302-03 | 1 | Shield-Cooler |
| 19 | 3234-21 | 3 | Screw-HHF |

| Ref. | Part Number | Qty. | Description |
|---|---|---|---|
| 20 | 3256-3 | 2 | Washer-Flat |
| 21 | 109-2365 | 2 | Bumper-Rubber |
| 23 | 119-0393-03 | 1 | Bracket-Relay, Fuse |
| 24 | 136-5518 | 1 | Front Engine Shield ASM |
| 24:2 | 110-3853 | 1 | Decal-Danger, Rotating Devices |
| 24:3 | 108-5955 | 1 | Decal-Routing, Hydro Belt |
| 24:4 | 110-3852 | 1 | Decal- Warning, Buzzer |
| 24:5 | 100-3815 | 2 | Grommet-Rubber |
| 24:6 | 108-5957 | 1 | Decal-Routing, Clutch Belt |
| 24:7 | 136-5510 | 1 | Decal-Check, Service |
| 24:8 | 110-0806 | 1 | Decal-Caution |
| 24:9 | 104-2449 | 1 | Decal-Coolant |
| 25 | 110-0879 | 1 | Guard-Fan, LH (CE) |
| 25:2 | 107-7719 | 1 | Decal-Danger |
| 26 | 110-0888 | 1 | Guard-Fan, RH (CE) |
| 26:2 | 107-7719 | 1 | Decal-Danger |
| 27 | 131-8738 | 1 | Guard-Upper Rear W/Decal |
| 27:2 | 119-0397 | 1 | Decal-Relay |
| 29 | 3256-4 | 2 | Washer-Flat |
| 30 | 108-5339-03 | 1 | Bracket-Support, RH |

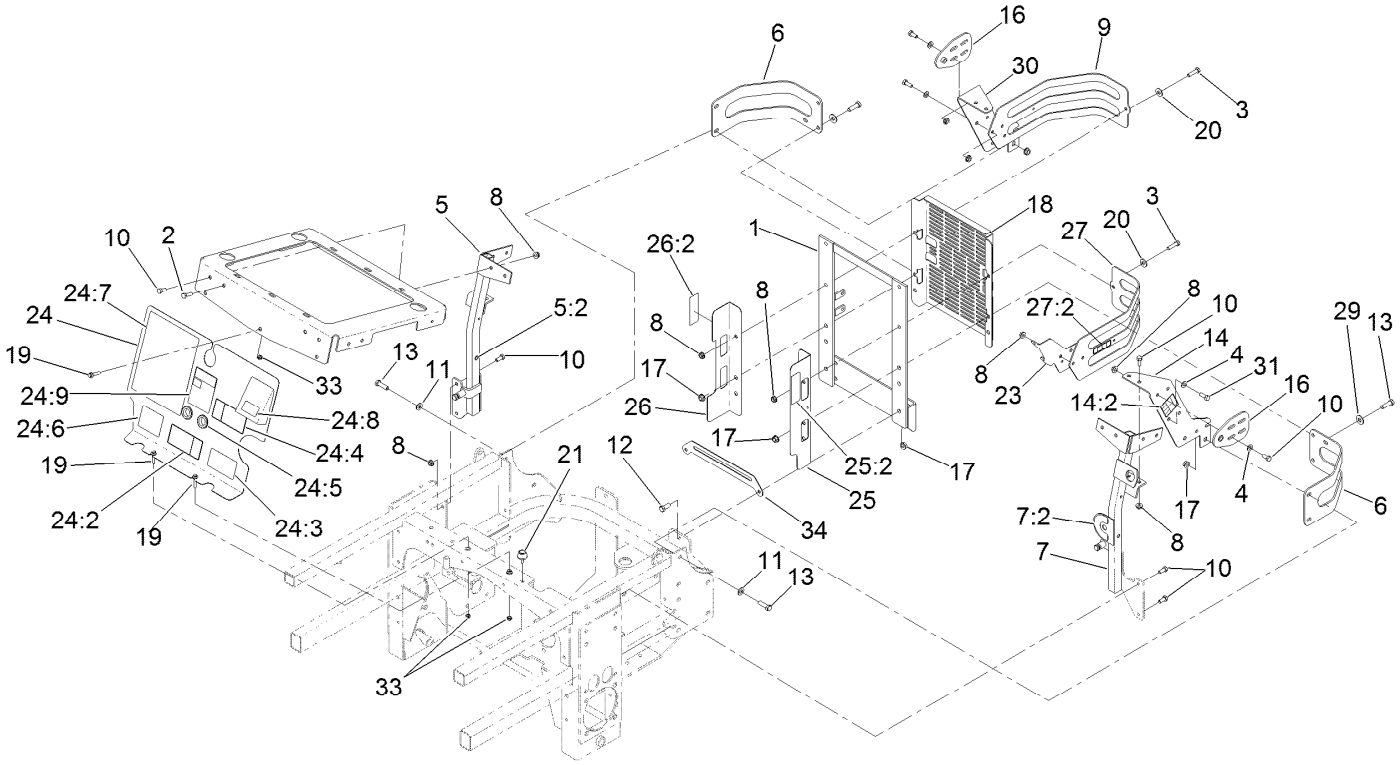


# Engine Housing Assembly (continued)

| Ref. | Part Number | Qty. | Description |
|---|---|---|---|
| 31 | 322-4 | 4 | Screw-HH |
| 33 | 3296-56 | 3 | Nut-Lock, NI |
| 34 | 131-8679-03 | 1 | Shield-Fan |

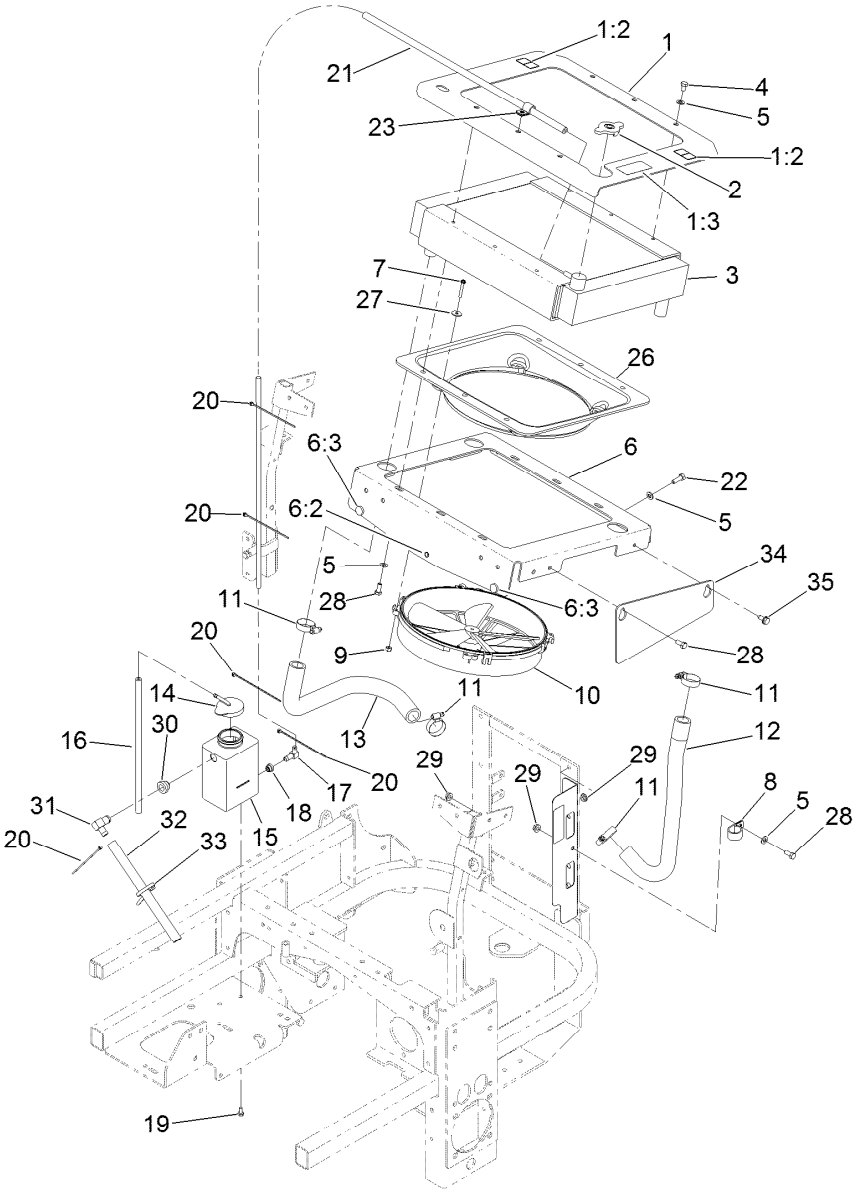


# Cooling System Assembly

| Ref. | Part Number | Qty. | Description |
|---|---|---|---|
| 1 | 110-3845 | 1 | Top Radiator Plate ASM |
| 1:2 | 93-8069 | 2 | Decal-Surface, Hot |
| 1:3 | 110-3842 | 1 | Decal-Antifreeze |
| 2 | 1-643161 | 1 | Cap-Radiator |
| 3 | 107-9932 | 1 | Radiator |
| 4 | 322-1 | 6 | Screw-HH |
| 5 | 3256-23 | 16 | Washer-Flat |
| 6 | 131-8748 | 1 | Bottom Radiator Plate ASM |
| 6:2 | 32148-6 | 1 | Insert-Nut |
| 6:3 | 1-513658 | 2 | Bumper |
| 7 | 108-5988 | 4 | Screw-HWH |
| 8 | 1-643312 | 1 | Clip-Loom |
| 9 | 1-804254 | 4 | Nut-Lock, HH |
| 10 | 1-633831 | 1 | Fan |
| 11 | 2412-34 | 4 | Clamp-Hose |
| 12 | 108-5372 | 1 | Hose-Radiator, LH |
| 13 | 108-5904 | 1 | Hose-Outlet, Engine |
| 14 | 1-643164 | 1 | Cap-Tank, Overflow |
| 15 | 117-0941 | 1 | Tank-Overflow |

| Ref. | Part Number | Qty. | Description |
|---|---|---|---|
| 16 | 1-603954 | 1 | Hose-Line, Fuel |
| 17 | 46-6550 | 1 | Fitting-Elbow, 90 DEG |
| 18 | 1-513645 | 1 | Bushing-Valve, Fuel |
| 19 | 321-2 | 2 | Screw-HH |
| 20 | 1-303287 | 6 | Tie-Cable |
| 21 | 103-1428 | 1 | Hose-Overflow |
| 22 | 322-5 | 5 | Screw-HH |
| 23 | 1-603727 | 1 | Clip-Loom |
| 26 | 108-5971 | 1 | Shroud-Cooling, Engine |
| 27 | 3256-67 | 4 | Washer-Flat |
| 28 | 322-3 | 8 | Screw-HH |
| 29 | 32128-20 | 3 | Nut-HF |
| 30 | 104-0790 | 1 | Bushing |
| 31 | 117-0943 | 1 | Fitting-Elbow |
| 32 | 115-4969 | 1 | Hose-Overflow |
| 33 | 1-303335 | 1 | Tie-Plastic |
| 34 | 131-8678-03 | 2 | Shield-Radiator |
| 35 | 32144-70 | 2 | Screw-HWHTF |

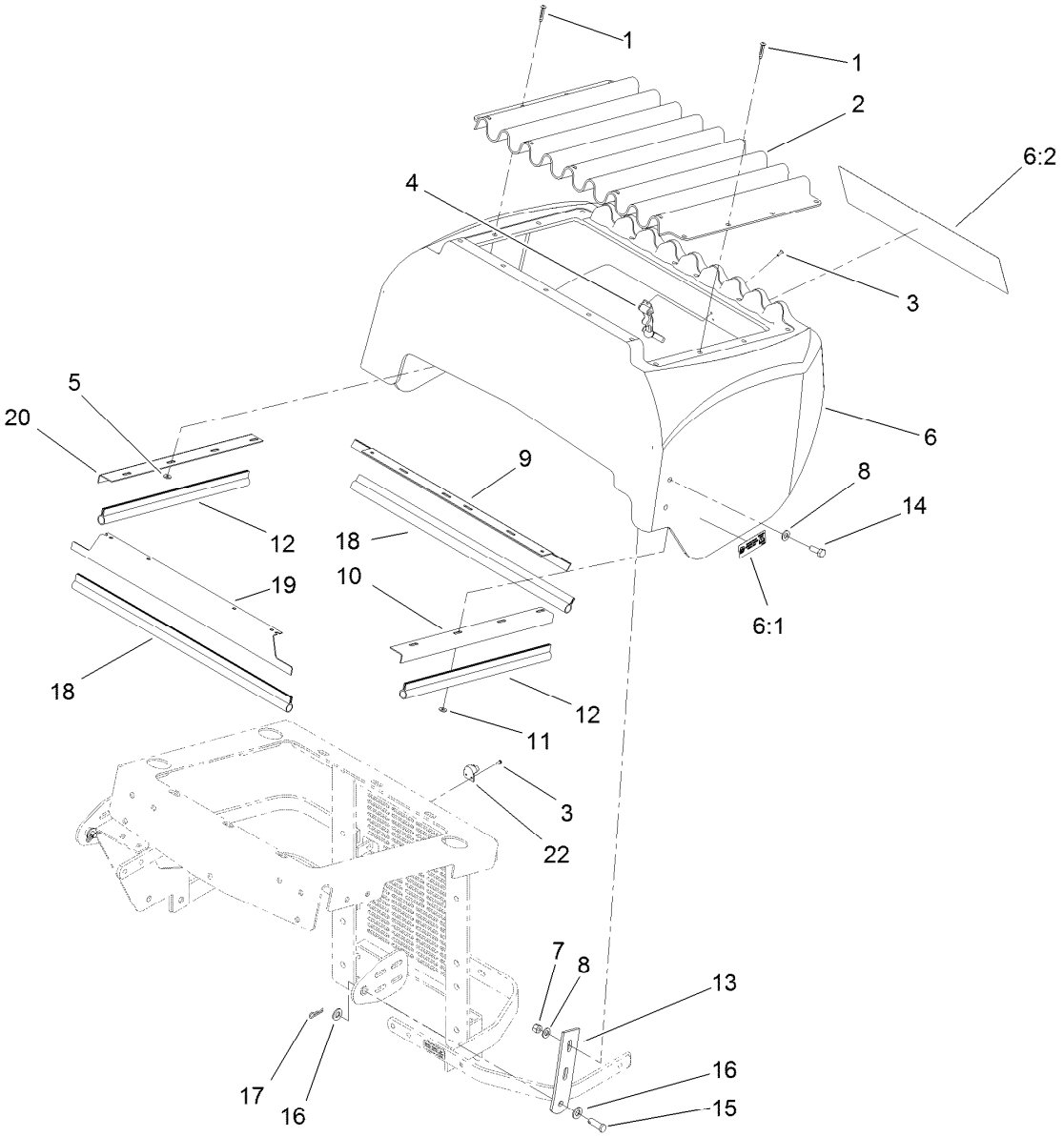


# Hood Assembly

| Ref. | Part Number | Qty. | Description |
|---|---|---|---|
| 1 | 1-803072 | 17 | Rivet |
| 2 | 1-633864-03 | 1 | Screen-Radiator |
| 3 | 923786 | 4 | Rivet |
| 4 | 1-643188 | 1 | Latch-Rubber |
| 5 | 1-303435 | 4 | Washer-Spring |
| 6 | 114-8225 | 1 | Hood ASM |
| 6:1 | 114-9600 | 2 | Decal-Low Sulfur |
| 6:2 | 136-5521 | 1 | Decal |
| 7 | 3296-29 | 4 | Nut-Lock, NI |
| 8 | 3256-23 | 8 | Washer-Flat |
| 9 | 1-643108-03 | 1 | Angle-Radiator, Bottom |
| 10 | 1-643105-03 | 1 | Angle-Radiator, LH |
| 11 | 3256-14 | 12 | Washer-Flat |
| 12 | 1-643186 | 2 | Seal-Trim |
| 13 | 108-5337-03 | 2 | Plate-Hinge, Hood |
| 14 | 322-4 | 4 | Screw-HH |
| 15 | 1-808285 | 2 | Pin-Clevis |
| 16 | 3256-24 | 4 | Washer-Flat |
| 17 | 1-806003 | 2 | Pin-Cotter |
| 18 | 1-643187 | 2 | Seal-Trim |
| 19 | 1-643107-03 | 1 | Angle-Radiator, Top |
| 20 | 1-643106-03 | 1 | Angle-Radiator, RH |
| 22 | 1-643189 | 1 | Keeper-Latch, Rubber |

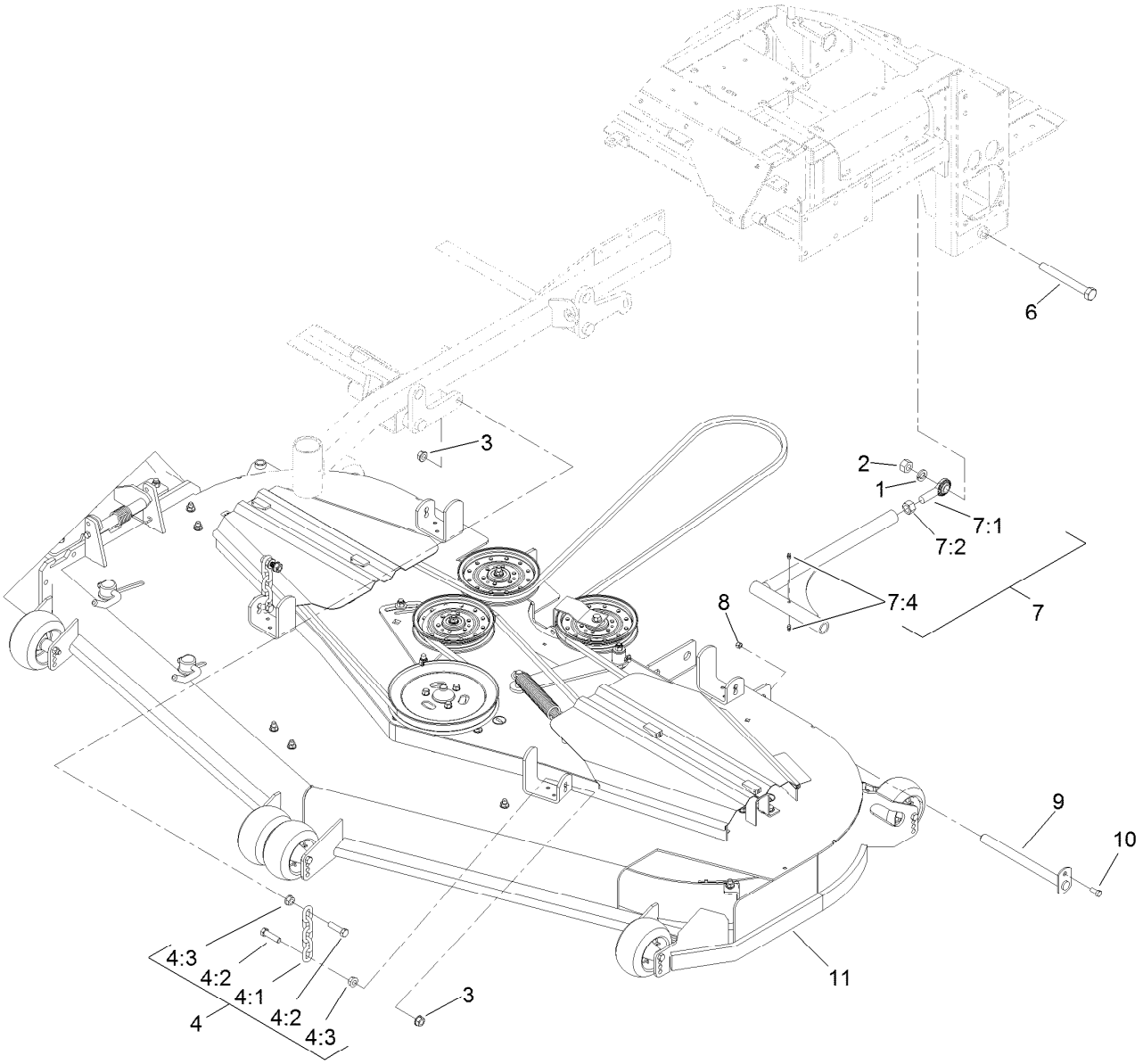


# Deck Connection Assembly

| Ref. | Part Number | Qty. | Description |
|---|---|---|---|
| 1 | 3253-8 | 2 | Washer-Lock |
| 2 | 3217-11 | 2 | Nut-Hex |
| 3 | 32128-37 | 8 | Nut-HF |
| 4 | 103-9792 | 4 | Deck Chain ASM |
| 4:1 | 1-633447 | 1 | Chain-Lift, Deck |
| 4:2 | 103-1898 | 2 | Screw-HH |
| 4:3 | 32128-37 | 2 | Nut-HF |
| 6 | 327-28 | 2 | Screw-HH |

| Ref. | Part Number | Qty. | Description |
|---|---|---|---|
| 7 | 108-5969 | 2 | Strut ASM |
| 7:1 | 1-633029 | 1 | Balljoint-Spherical |
| 7:2 | 3219-6 | 1 | Nut-Hex |
| 7:4 | 109-1380 | 1 | Fitting-Grease |
| 8 | 3296-29 | 2 | Nut-Lock, NI |
| 9 | 1-632199-01 | 2 | Pin-Strut |
| 10 | 322-3 | 2 | Screw-HH |
| 11 | | 1 | Deck ASM ● |

● Not serviced separately

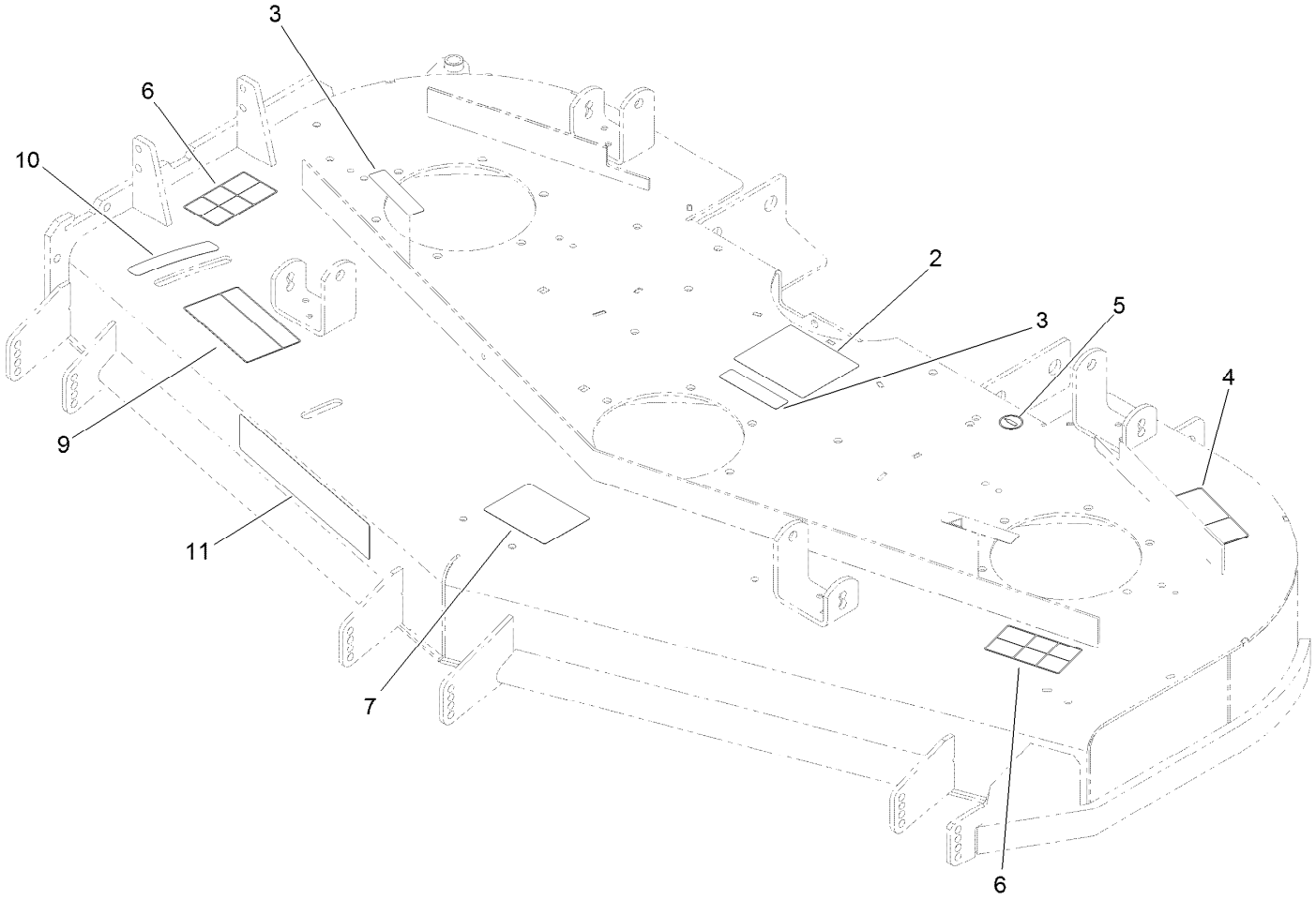


# Deck Decal Assembly No. 131-7717

| *Ref.* | *Part Number* | *Qty.* | *Description* |
|---|---|---|---|
| 2 | 108-5981 | 1 | Decal-Routing, Belt |
| 3 | 98-1977 | 3 | Decal-Warning |
| 4 | 93-7818 | 1 | Decal-Torque, Blade Bolt |
| 5 | 58-6520 | 1 | Decal-Grease |
| 6 | 93-7010 | 2 | Decal-Danger |
| 7 | 127-0326 | 1 | Decal-Anti Scalp |
| 9 | 110-2068 | 1 | Decal-Adjustment, Baffle |
| 10 | 110-2067 | 1 | Decal-Setting, Baffle |
| 11 | 107-1619 | 1 | Decal |

# Deck Assembly

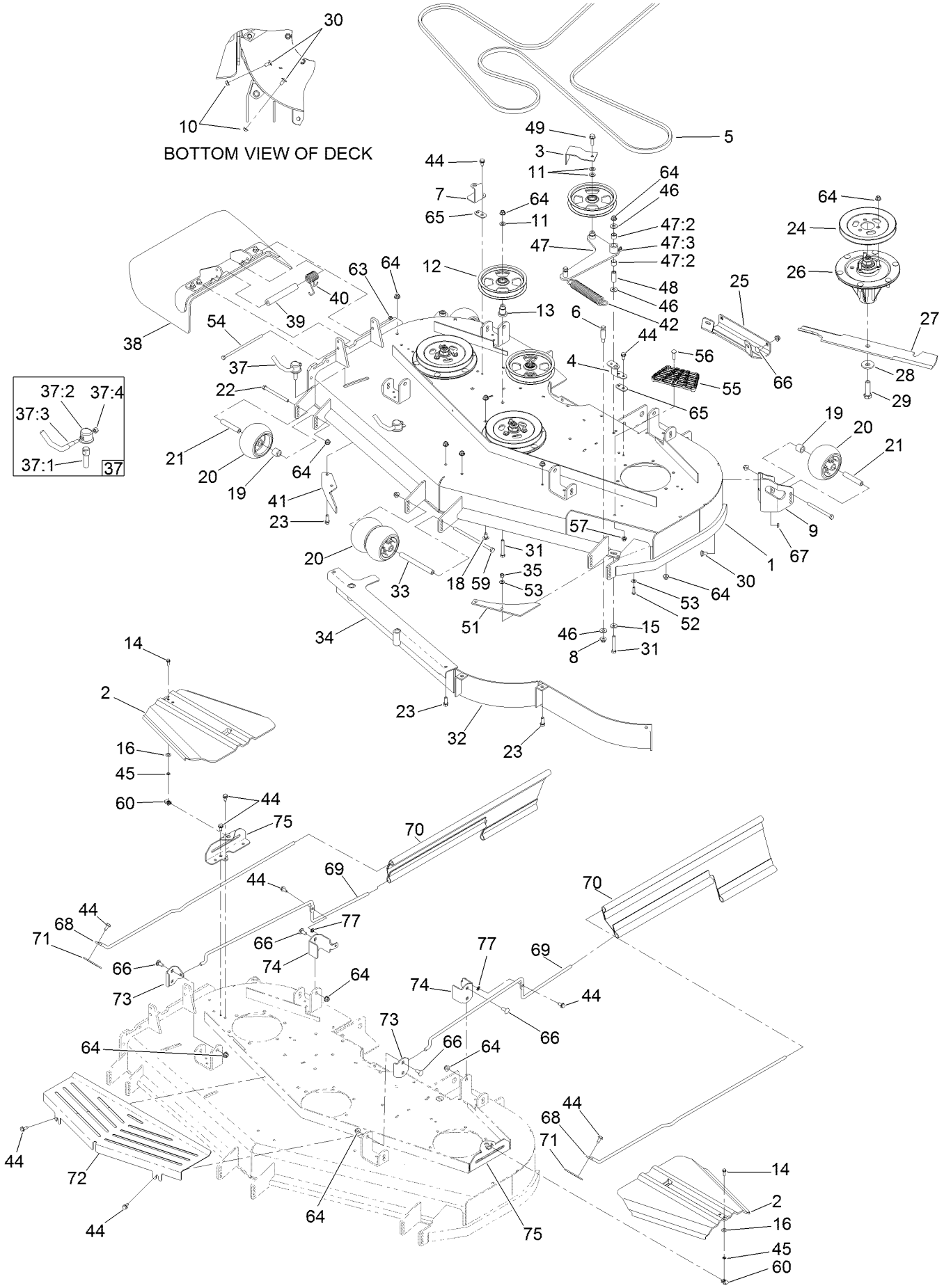

# Deck Assembly (continued)

| Ref. | Part Number | Qty. | Description |
|---|---|---|---|
| 1 | 131-7717 | 1 | Deck Decal ASM |
| 2 | 107-8536 | 2 | Cover-Belt |
| 3 | 108-7220-01 | 1 | Guide-Belt |
| 4 | 108-2177-01 | 1 | Bracket-Cover, Tall |
| 5 | 114-4420 | 1 | Belt-V |
| 6 | 110-0801 | 1 | Pin-Threaded, Spring Anchor |
| 7 | 119-4221-01 | 1 | Bracket-Cover |
| 8 | 32128-19 | 1 | Nut-HF |
| 9 | 106-7354-01 | 1 | Mount-Wheel, LH |
| 10 | 3290-357 | 4 | Nut-HHF, Whiz |
| 11 | 3256-24 | 4 | Washer-Flat |
| 12 | 132-9424 | 3 | Pulley-Idler, Flat |
| 13 | 106-3214 | 2 | Mount-Pulley |
| 14 | 32105-15 | 2 | Screw-HWH |
| 15 | 98-5975 | 1 | Washer-Belleville |
| 16 | 73-0041 | 2 | Washer-Thrust |
| 18 | 3231-21 | 1 | Screw-CARR |
| 19 | 98-7913 | 4 | Tube-Spacer |
| 20 | 1-603299 | 6 | Roller-Scalp, Anti |
| 21 | 98-7912 | 4 | Tube-Spanner |
| 22 | 323-23 | 4 | Screw-HH |
| 23 | 92-1624 | 6 | Screw-HWH |
| 24 | 107-7678 | 3 | Pulley |
| 25 | 105-8792-01 | 1 | Plate-Skid |
| 26 | 127-0560 | 3 | Spindle ASM |
| 27 | 105-7718-03 | 3 | Blade-Hi Flow |
| 28 | 103-0865 | 3 | Washer-Blade Bolt, Heavy |
| 29 | 51-4060 | 3 | Screw-Blade |
| 30 | 3231-1 | 7 | Screw-CARR |
| 31 | 323-12 | 3 | Screw-HH |
| 32 | 105-7657-01 | 1 | Baffle |
| 33 | 98-5967 | 1 | Spacer-Wheel |
| 34 | 127-4858-01 | 1 | Baffle ASM |
| 35 | 3296-29 | 2 | Nut-Lock, NI |
| 37 | 107-1664 | 2 | Lever ASM |
| 37:1 | 106-3239 | 1 | Screw-Lock |
| 37:2 | 107-1644 | 1 | Cap-Lock |
| 37:3 | 106-3241 | 1 | Lever-Lock |
| 37:4 | 3296-29 | 1 | Nut-Lock, NI |
| 38 | 108-2792 | 1 | Rubber Deflector ASM |
| 39 | 105-4622 | 1 | Spacer |
| 40 | 108-4052 | 1 | Spring-Torsion |
| 41 | 106-3216-01 | 1 | Baffle-Discharge |
| 42 | 119-0392 | 1 | Spring-Extension |
| 44 | 32144-70 | 12 | Screw-HWHTF |
| 45 | 106-8737 | 2 | Nut-Retainer |
| 46 | 3256-4 | 3 | Washer-Flat |
| 47 | 108-5949 | 1 | Deck Idler Arm ASM |
| 47:2 | 103-4681 | 2 | Sleeve-Bearing |
| 47:3 | 302-40 | 1 | Fitting-Grease, 90 DEG |
| 48 | 1-603044 | 1 | Bushing |
| 49 | 3234-24 | 1 | Screw-HHF |
| 51 | 107-3137 | 1 | Plate-Turbo |
| 52 | 3274-104 | 2 | Screw-HSBH |
| 53 | 1-303334 | 4 | Washer-Spring |
| 54 | 322-50 | 1 | Screw-HH |
| 55 | 126-4781-03 | 1 | Step-Deck |
| 56 | 3230-3 | 1 | Screw-CARR |
| 57 | 104-8300 | 1 | Nut-Flange, NI |
| 59 | 108-5388 | 1 | Screw-HH |
| 60 | 107069 | 2 | Clip |
| 63 | 3296-47 | 1 | Nut-Lock, NI |
| 64 | 104-8301 | 50 | Nut-Flange, NI |
| 65 | 119-4222-01 | 2 | Spacer-Belt Cover |
| 66 | 3231-27 | 8 | Screw-CARR |
| 67 | 3296-59 | 3 | Nut-Lock, NI |
| 68 | 131-4004 | 2 | Rod-Support, Upper |
| 69 | 131-4006 | 2 | Rod-Support, Lower |
| 70 | 131-4029 | 2 | Guard-Side |
| 71 | 131-4003-03 | 2 | Bracket-Mounting, Upper Rod |
| 72 | 131-3984-03 | 1 | Shield-Front, Deck |
| 73 | 131-4198-03 | 2 | Bracket-Mounting, Front |
| 74 | 131-4199-03 | 2 | Bracket-Mounting, Rear |
| 75 | 131-4002-03 | 2 | Bracket-Support, Spindle Cover |
| 77 | 117-2749 | 2 | Nut-Push |

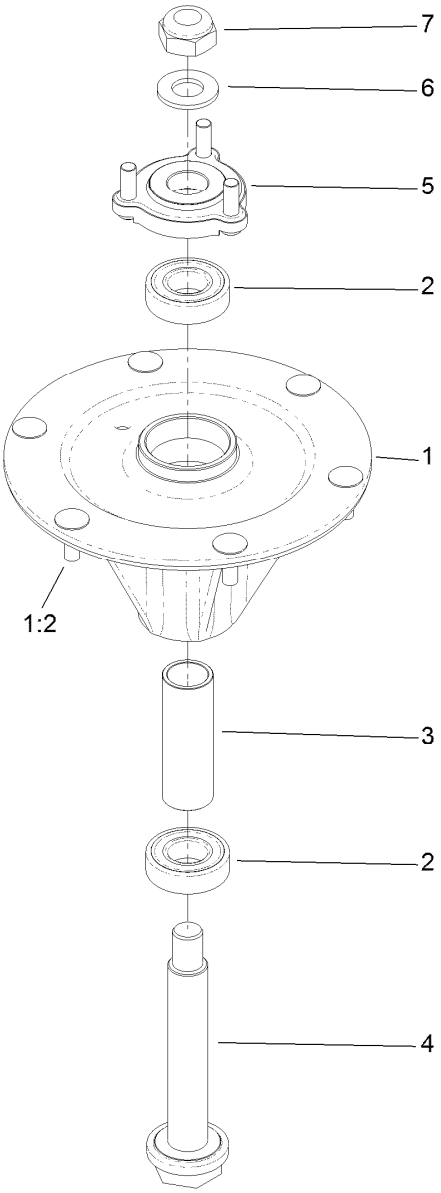


# Spindle Assembly No. 127-0560

| Ref. | Part Number | Qty. | Description |
|---|---|---|---|
| 1 | | 1 | Spindle Housing ASM W/Studs ● |
| 1:2 | 114-8195 | 6 | Bolt-Ribbed Neck |
| 2 | 116-0720 | 2 | Bearing-Ball |
| 3 | 127-0554 | 1 | Spacer-Bearing |
| 4 | 127-0556 | 1 | Shaft-Spindle, Ball Bearing |
| 5 | 127-0557 | 1 | Hub-Spindle (W/Studs) |
| 6 | 92-5836 | 1 | Washer |
| 7 | 3296-67 | 1 | Nut-Lock, NI |

● Not serviced separately

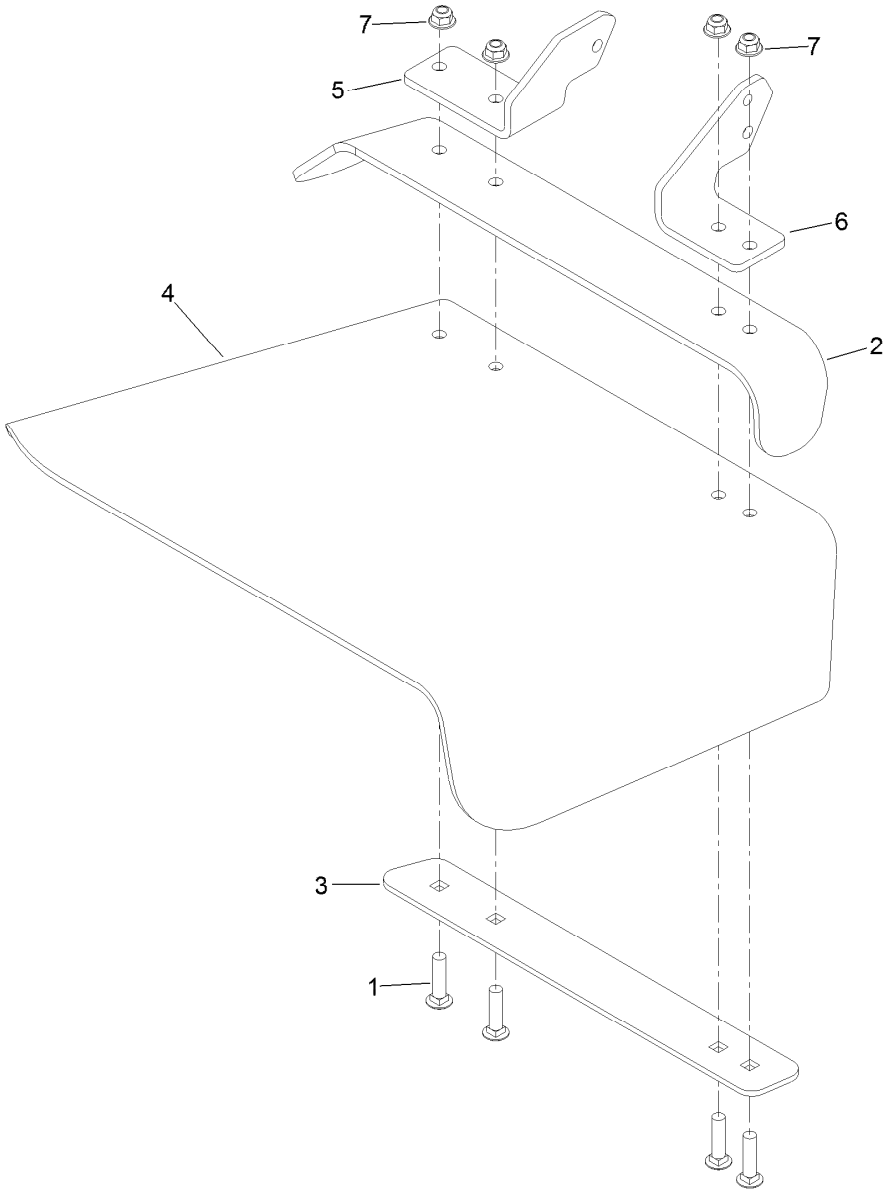


# Rubber Deflector Assembly No. 108-2792

| *Ref.* | *Part Number* | *Qty.* | *Description* |
|---|---|---|---|
| 1 | 3231-4 | 4 | Screw-CARR |
| 2 | 106-3246-01 | 1 | Deflector |
| 3 | 106-3248-03 | 1 | Strap-Discharge |
| 4 | 108-5029 | 1 | Deflector-Rubber |
| 5 | 108-4059-01 | 1 | Plate-Hinge, Rear |
| 6 | 106-3253-01 | 1 | Plate-Hinge, Front |
| 7 | 104-8301 | 4 | Nut-Flange, NI |

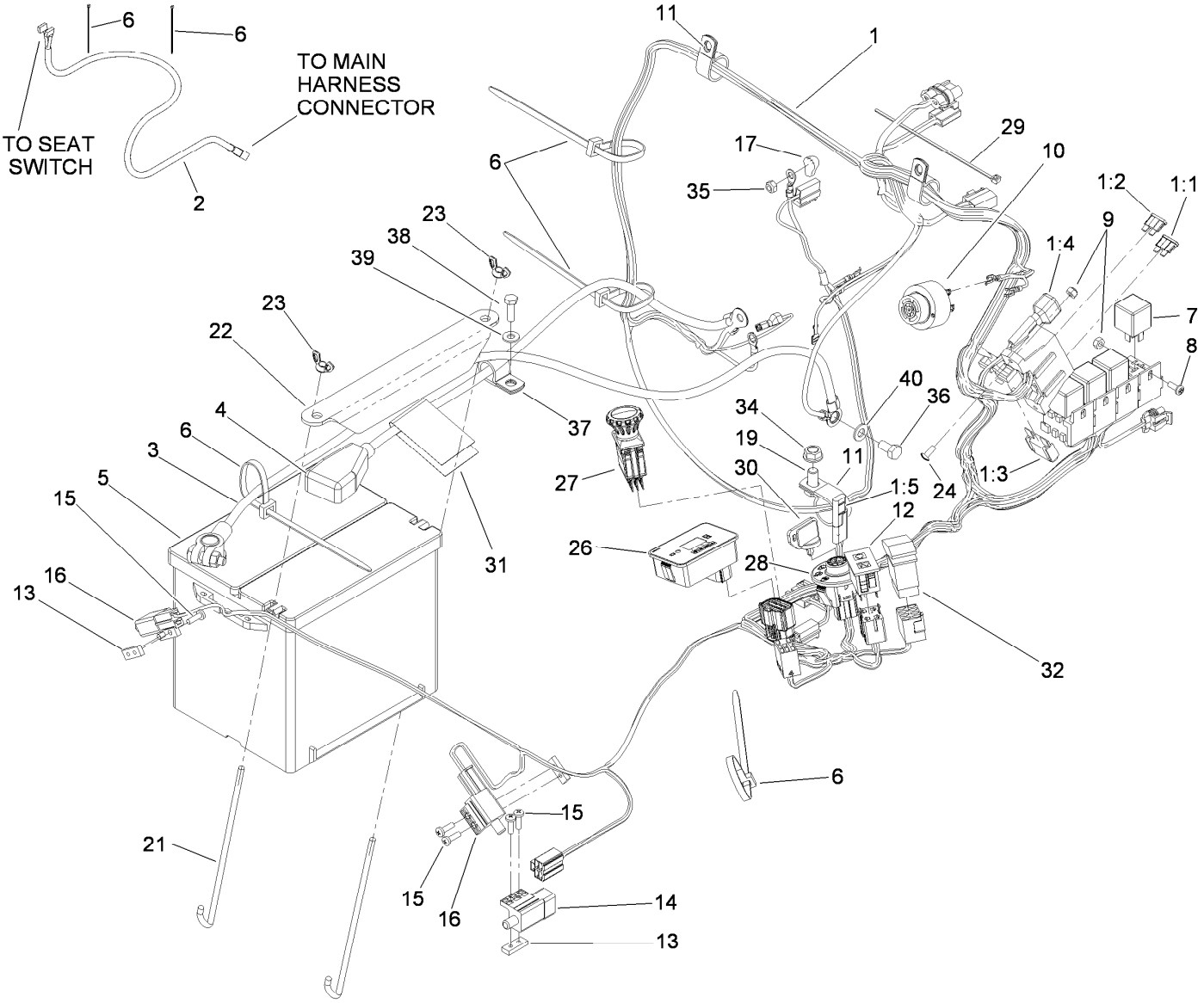


# Electrical Assembly

| Ref. | Part Number | Qty. | Description |
|---|---|---|---|
| 1 | 119-0351 | 1 | Harness-Wire |
| 1:1 | 218-578 | 1 | Fuse-Blade, 10 Amp |
| 1:2 | 109103 | 1 | Fuse-Blade, 30 Amp |
| 1:3 | 94-8002 | 1 | Fuse-Blade, 50 Amp |
| 1:4 | 100-4918 | 1 | Diode |
| 1:5 | 116-0053 | 1 | Cap-Plug |
| 2 | 103-1227 | 1 | Harness-Wiring, Seat |
| 3 | 110-0303 | 1 | Cable-Battery, Negative |
| 4 | 110-0304 | 1 | Cable-Battery, Positive |
| 5 | 106-5187 | 1 | Battery-Dry |
| 6 | 1-303335 | 7 | Tie-Plastic |
| 7 | 1-643275 | 4 | Relay |
| 8 | 1-803071 | 2 | Screw |
| 9 | 3296-2 | 4 | Nut-Lock, NI |
| 10 | 103-0205 | 1 | Alarm-Tone, Dual |
| 11 | 1-643312 | 3 | Clip-Loom |
| 12 | 100-8071 | 1 | Lamp-Warning |
| 13 | 1-633181 | 3 | Plate-Tapped |
| 14 | 1-633111 | 1 | Switch |
| 15 | 3290-500 | 6 | Screw-PPH |
| 16 | 1-513051 | 2 | Switch-Open, Normally |

| Ref. | Part Number | Qty. | Description |
|---|---|---|---|
| 17 | 1-643178 | 1 | Cap-Insulator, Red |
| 19 | 323-4 | 1 | Screw-HH |
| 21 | 103-1312 | 2 | Bolt-Holddown |
| 22 | 103-1311-03 | 1 | Holddown-Battery |
| 23 | 1-543792 | 2 | Wingnut |
| 24 | 1-803075 | 2 | Screw-Head, Truss |
| 26 | 116-5609 | 1 | Module ASM |
| 27 | 116-0124 | 1 | Switch-PTO, 10 Amp |
| 28 | 117-2221 | 1 | Switch-Ignition |
| 29 | 1-303287 | 1 | Tie-Cable |
| 30 | 63-8360 | 2 | Key-Ignition |
| 31 | 107-9309 | 1 | Decal-Instructions, Charging |
| 32 | 110-0811 | 1 | Switch-Rocker |
| 34 | 3290-357 | 1 | Nut-HHF, Whiz |
| 35 | 33023-00 | 1 | Nut-Lock |
| 36 | 33114-016 | 1 | Screw-HH |
| 37 | 1-633396 | 2 | Clip-Loom |
| 38 | 321-5 | 2 | Screw-HH |
| 39 | 3256-22 | 2 | Washer-Flat |
| 40 | 3256-23 | 1 | Washer-Flat |

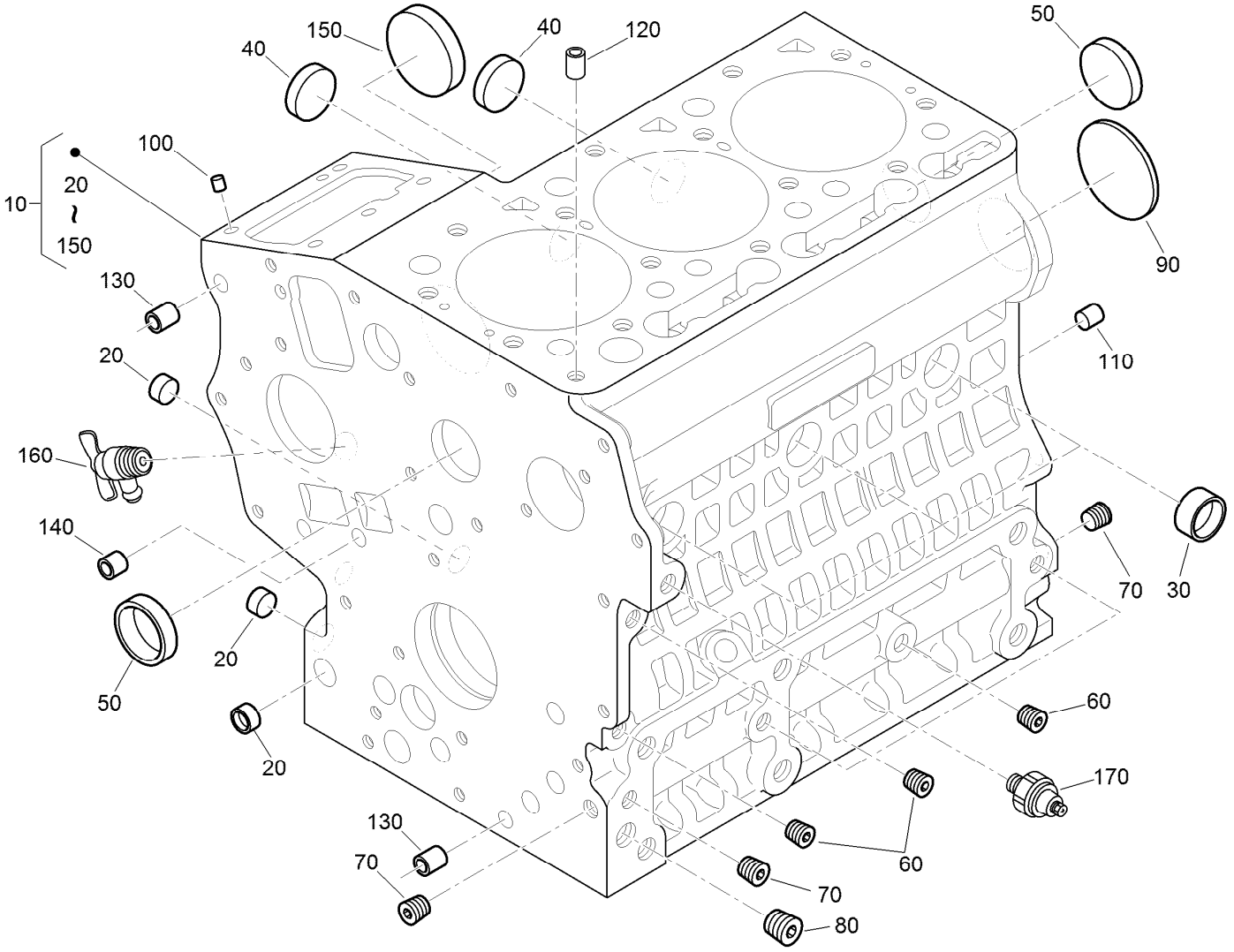


# Crankcase Assembly

| Ref. | Part Number | Qty. | Description |
|---|---|---|---|
| 10 | 120-3120 | 1 | Crankcase ASM |
| 20 | 100-2019 | 3 | Cap-Sealing |
| 30 | 100-2020 | 3 | Cap-Sealing |
| 40 | 110-3702 | 2 | Cap-Sealing |
| 50 | 98-9398 | 2 | Cap-Sealing |
| 60 | 98-9687 | 5 | Plug |
| 70 | 98-7487 | 3 | Plug |
| 80 | 98-7488 | 1 | Plug |
| 90 | 100-1851 | 1 | Plug-Expansion |

| Ref. | Part Number | Qty. | Description |
|---|---|---|---|
| 100 | 98-9375 | 2 | Pin-Straight |
| 110 | 98-9377 | 2 | Pin-Straight |
| 120 | 98-7506 | 1 | Pin-Pipe |
| 130 | 100-2051 | 2 | Pin-Pipe |
| 140 | 100-2051 | 2 | Pin-Pipe |
| 150 | 100-1991 | 1 | Cover-Fuel, Camshaft |
| 160 | 120-3121 | 1 | Draincock ASM |
| 170 | 100-2230 | 1 | Switch-Oil |

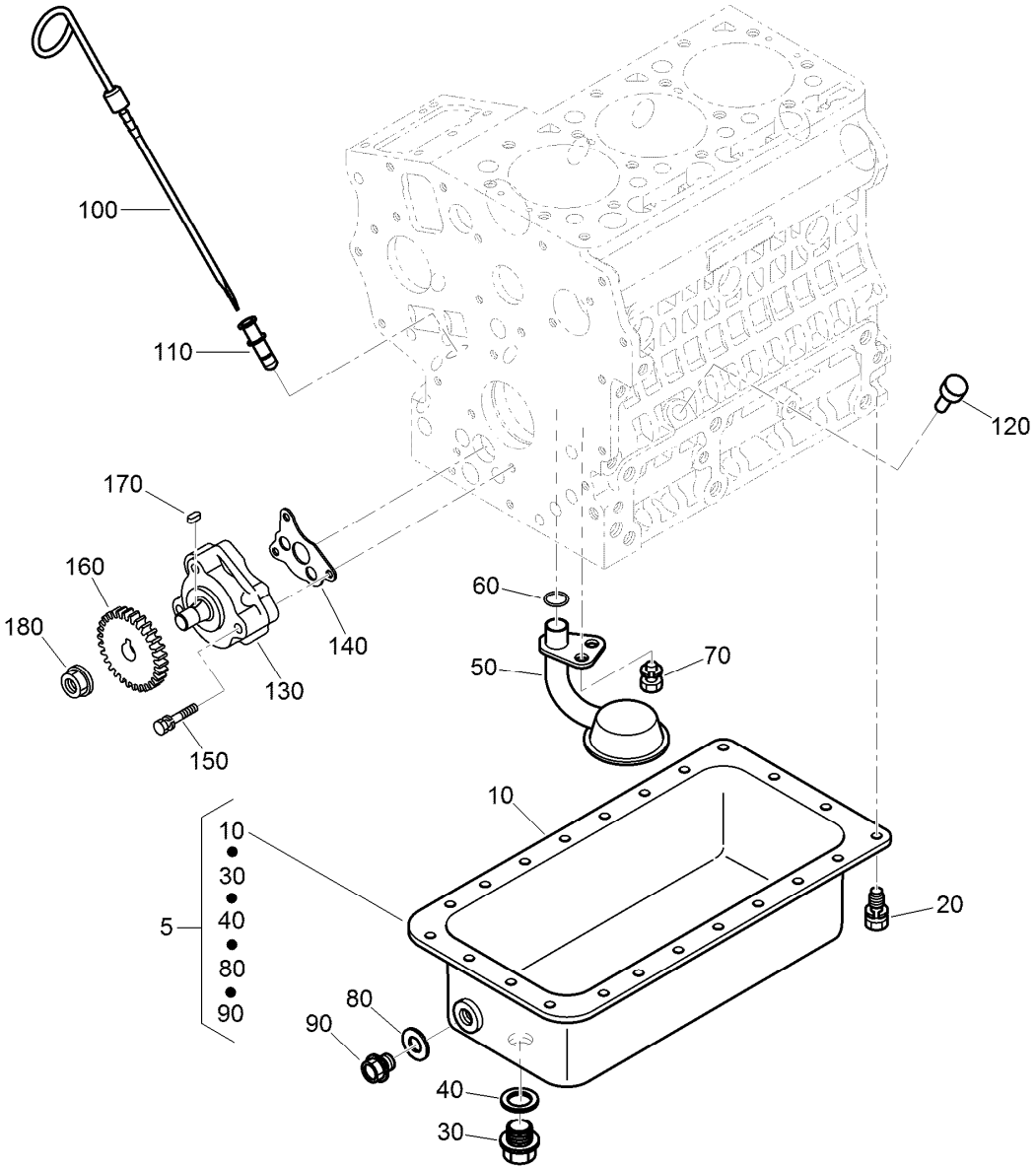


# Oil Pan, Oil Pump and Dipstick Assembly

| Ref. | Part Number | Qty. | Description |
|---|---|---|---|
| 5 | 112-8327 | 1 | Oil PAN Kit |
| 10 | 112-2523 | 1 | PAN-Oil |
| 20 | 98-9350 | 22 | Bolt |
| 30 | 114-8151 | 1 | Plug-Drain |
| 40 | 110-9715 | 1 | Gasket-PAN, Oil |
| 50 | 100-2001 | 1 | Strainer-Pickup, Oil |
| 60 | 105-3776 | 1 | O-Ring |
| 70 | 100-9195 | 1 | Bolt |
| 80 | 98-7524 | 1 | Gasket |
| 90 | 98-9686 | 1 | Plug-Drain |

| Ref. | Part Number | Qty. | Description |
|---|---|---|---|
| 100 | 110-3719 | 1 | Gauge-Oil |
| 110 | 105-4580 | 1 | Guide-Gauge, Oil |
| 120 | 110-3720 | 1 | Plug-Gauge, Oil |
| 130 | 100-2002 | 1 | Oil Pump ASM |
| 140 | 100-2003 | 1 | Gasket-Pump, Oil |
| 150 | 100-1923 | 3 | Bolt |
| 160 | 130-1419 | 1 | Gear-Drive, Oil Pump |
| 170 | 98-7658 | 1 | Key-Feather |
| 180 | 100-1779 | 1 | Nut-Flange |

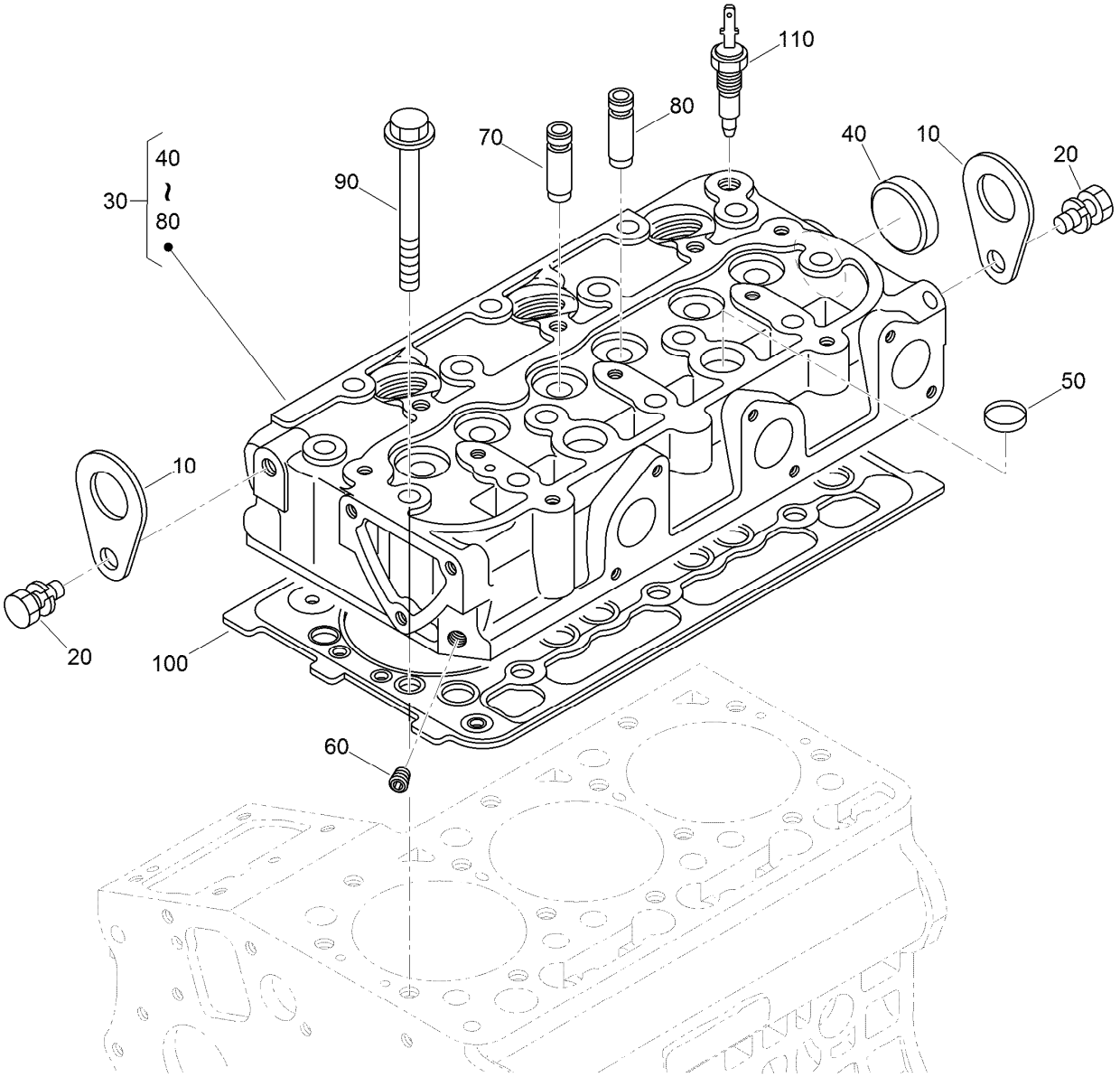


# Cylinder Head Assembly

| *Ref.* | *Part Number* | *Qty.* | *Description* |
|---|---|---|---|
| 10 | 98-7531 | 2 | Hook-Engine |
| 20 | 98-7526 | 2 | Bolt |
| 30 | 130-1504 | 1 | Cylinder Head ASM |
| 40 | 105-3705 | 1 | Cap-Sealing |
| 50 | 98-9389 | 2 | Cap-Sealing |
| 60 | 98-9687 | 1 | Plug |
| 70 | 100-1882 | 3 | Guide-Valve, Inlet |
| 80 | 100-1883 | 3 | Guide-Valve, Exhaust |
| 90 | 100-1820 | 14 | Bolt-Head, Cylinder |
| 100 | 112-2520 | 1 | Gasket-Head, Cylinder |
| 110 | 99-3582 | 1 | Thermoswitch |

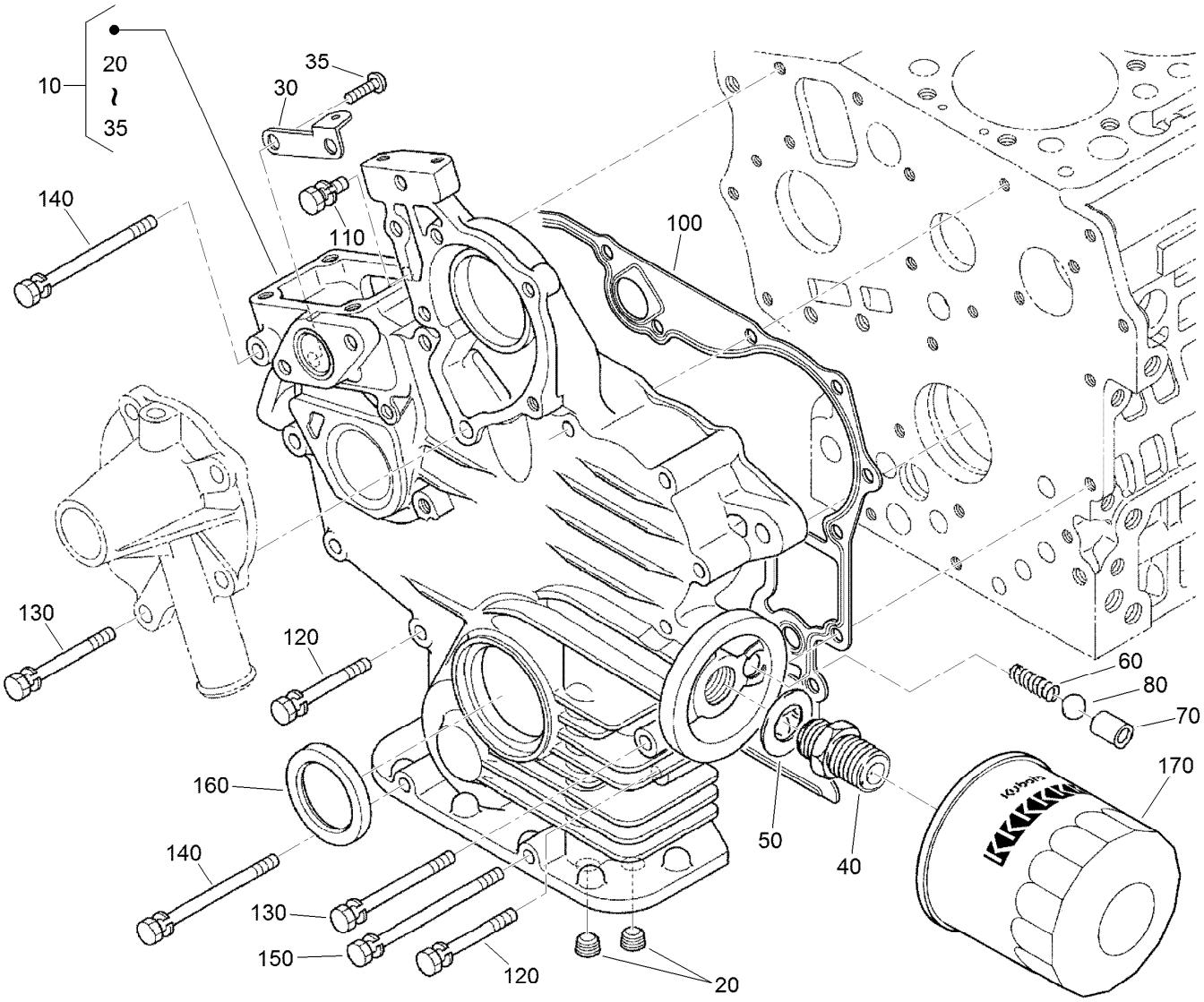


# Gear Case and Oil Filter Cartridge Assembly

| Ref. | Part Number | Qty. | Description |
|---|---|---|---|
| 10 | 110-3707 | 1 | Case-Gear |
| 20 | 98-7488 | 2 | Plug |
| 30 | 110-3708 | 1 | Stay-Spring, Start |
| 35 | 100-2040 | 2 | Screw |
| 40 | 98-9388 | 1 | Joint-Pipe |
| 50 | 100-1926 | 1 | Washer-Plain |
| 60 | 100-2004 | 1 | Spring |
| 70 | 100-1894 | 1 | Seat-Valve |
| 80 | 100-1792 | 1 | Ball |

| Ref. | Part Number | Qty. | Description |
|---|---|---|---|
| 100 | 117-0327 | 1 | Gasket-Case, Gear |
| 110 | 127-0403 | 1 | Bolt-Flange |
| 120 | 125-9063 | 9 | Bolt-Sems |
| 130 | 100-1922 | 2 | Bolt |
| 140 | 98-9357 | 2 | Bolt |
| 150 | 110-3710 | 1 | Bolt |
| 160 | 120-7852 | 1 | Seal-Oil |
| 170 | 115-8189 | 1 | Filter-Oil, Engine |

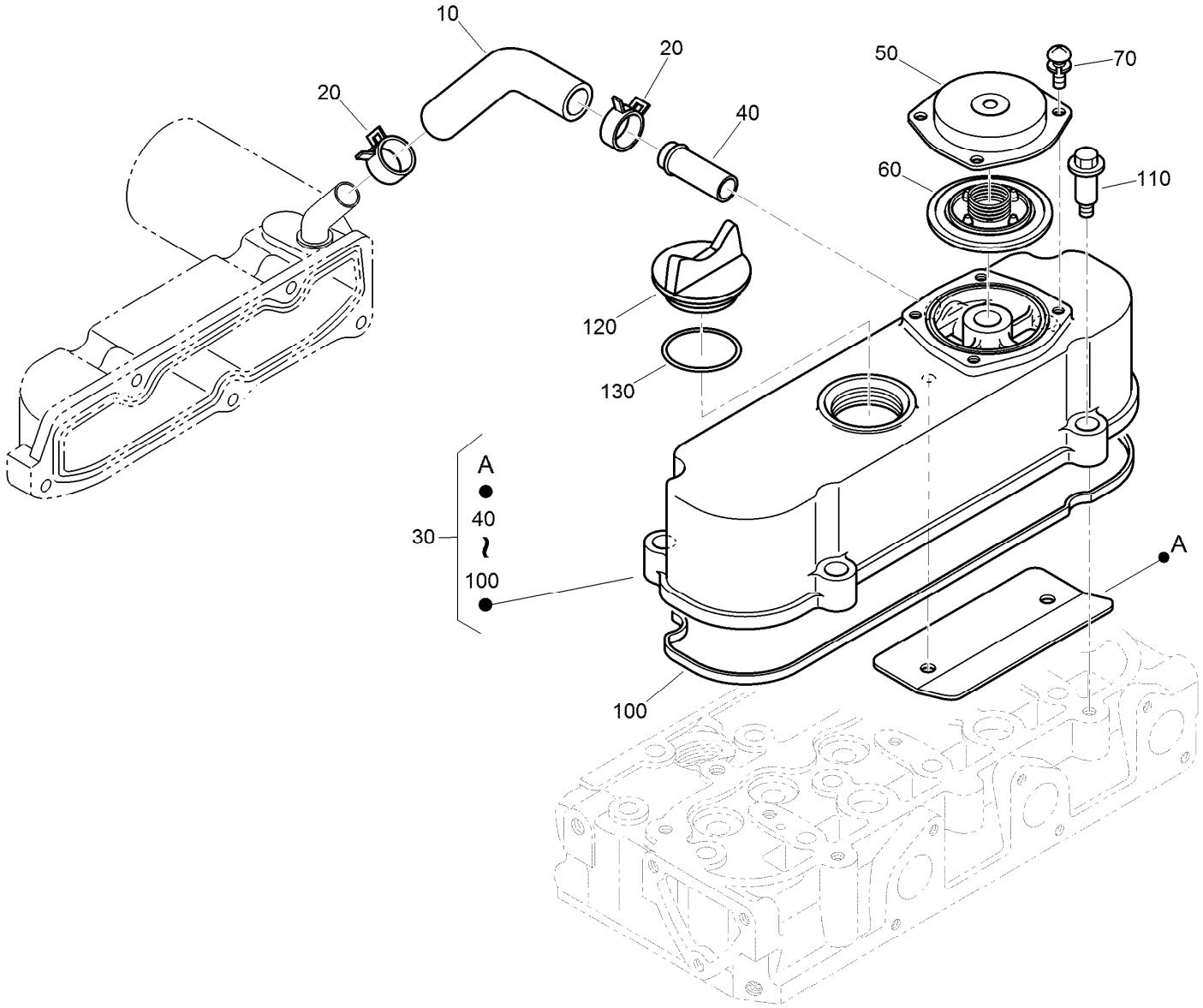


# Cylinder Head Cover Assembly

| Ref. | Part Number | Qty. | Description |
|---|---|---|---|
| 10 | 120-3139 | 1 | Tube-Breather |
| 20 | 110-3712 | 2 | Clamp-Hose |
| 30 | 112-8332 | 1 | Cylinder Head Cover ASM |
| 40 | 98-9580 | 1 | Pipe-Return, Water |
| 50 | 110-3714 | 1 | Cover-Breather |
| 60 | 110-3715 | 1 | Valve-Breather |
| 70 | 98-9364 | 4 | Screw (With Washer) |
| 100 | 112-2521 | 1 | Gasket-Cover, Head |
| 110 | 108-7063 | 4 | Bolt |
| 120 | 107-9075 | 1 | Plug-Filler, Oil |
| 130 | 99-3446 | 1 | O-Ring |

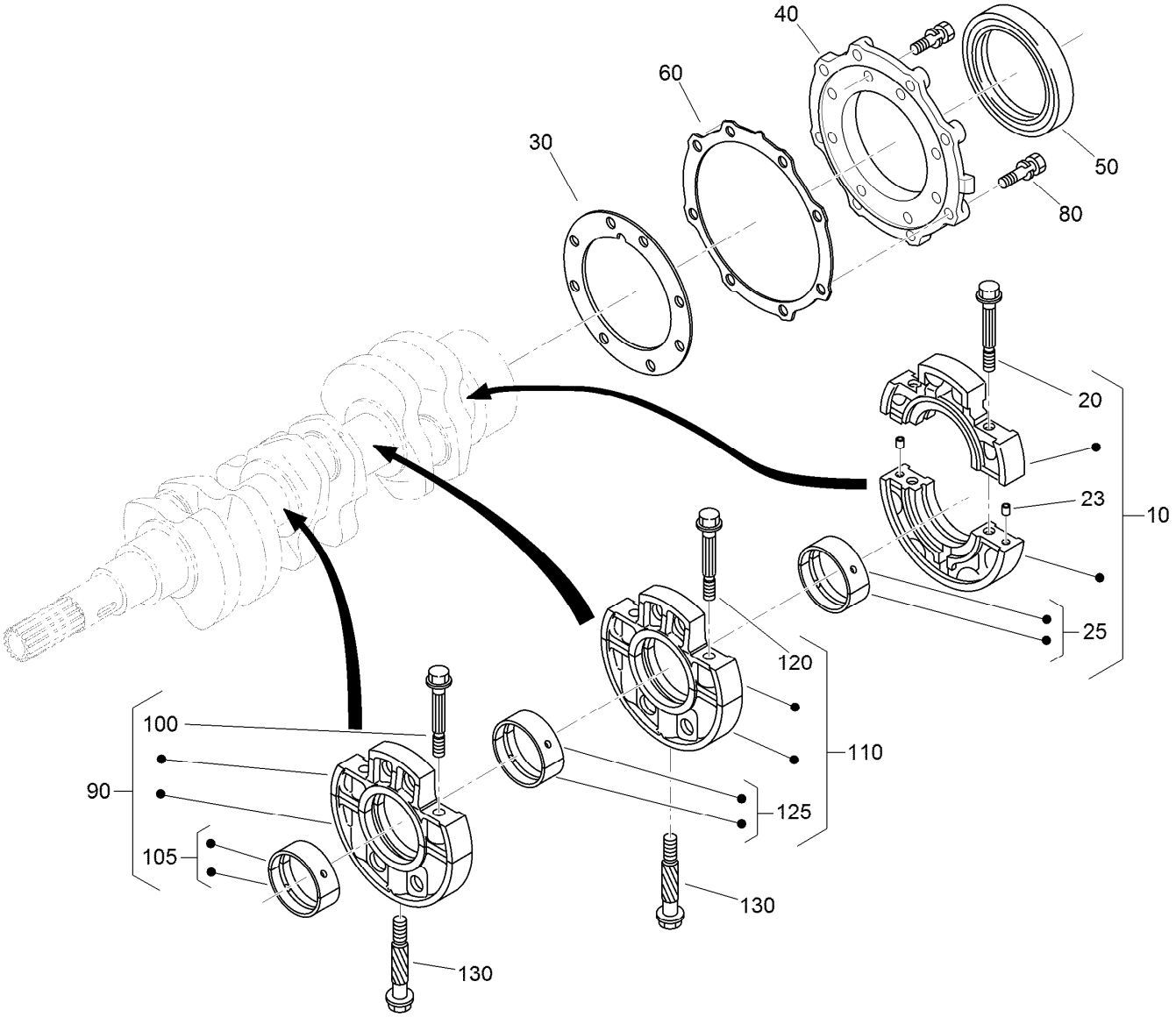


# Main Bearing Case Assembly

| Ref. | Part Number | Qty. | Description |
|---|---|---|---|
| 10 | 125-9064 | 1 | Wheel Bearing Case ASM |
| 20 | 125-9065 | 2 | Bolt-Flange |
| 23 | 125-9082 | 2 | Pin-Straight |
| 25 | 125-9066 | 1 | Crankshaft Metal ASM (STD) |
| 25 | 125-9067 | 1 | Crankshaft Metal ASM (-0.20Mm) |
| 25 | 125-9068 | 1 | Crankshaft Metal ASM (-0.40Mm) |
| 30 | 100-1873 | 1 | Gasket-Case, Bearing |
| 40 | 112-8334 | 1 | Cover-Case, Bearing |
| 50 | 110-3724 | 1 | Seal-Oil |
| 60 | 100-1876 | 1 | Gasket-Cover, Case |
| 80 | 100-1750 | 16 | Bolt |
| 90 | 110-3725 | 1 | Main Bearing Case ASM |
| 100 | 110-3723 | 2 | Bolt-Case, Bearing |

| Ref. | Part Number | Qty. | Description |
|---|---|---|---|
| 105 | 110-3741 | 1 | Crankshaft Metal ASM (STD) |
| 105 | 125-9083 | 1 | Crankshaft Metal ASM (-0.20Mm) |
| 105 | 110-3743 | 1 | Crankshaft Metal ASM (-0.40Mm) |
| 110 | 125-9069 | 1 | Main Case Bearing ASM |
| 120 | 110-3723 | 2 | Bolt-Case, Bearing |
| 125 | 110-3741 | 1 | Crankshaft Metal ASM (STD) |
| 125 | 125-9083 | 1 | Crankshaft Metal ASM (-0.20Mm) |
| 125 | 110-3743 | 1 | Crankshaft Metal ASM (-0.40Mm) |
| 130 | 100-1874 | 2 | Bolt-Case, Bearing |

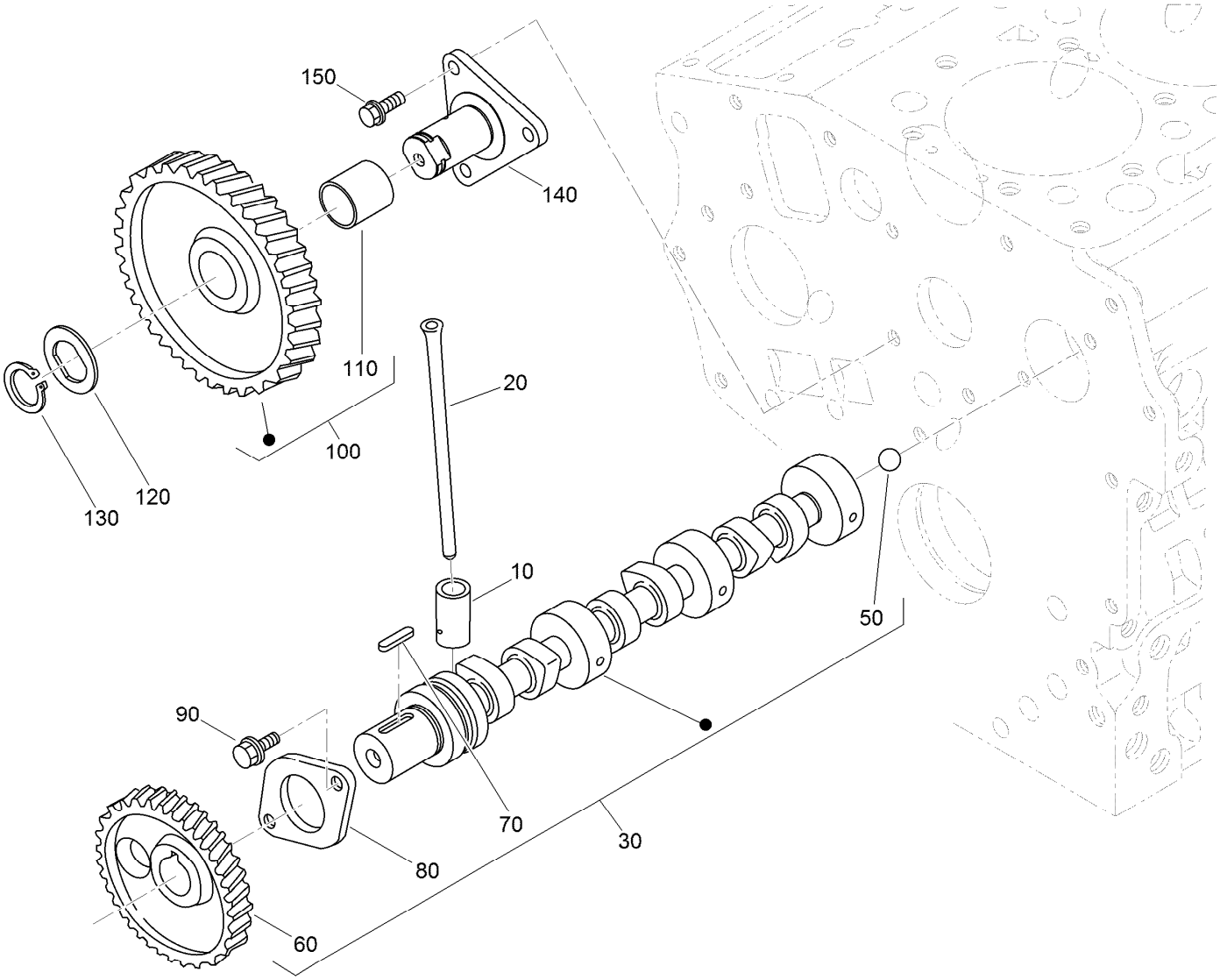


# Camshaft and Idle Gear Shaft Assembly

| *Ref.* | *Part Number* | *Qty.* | *Description* |
|---|---|---|---|
| 10 | 110-3727 | 6 | Tappet |
| 20 | 100-1989 | 6 | Rod-Push |
| 30 | 120-3126 | 1 | Camshaft ASM |
| 50 | 110-3729 | 1 | Ball |
| 60 | 130-1534 | 1 | Gear-Cam |
| 70 | 98-9378 | 1 | Key-Feather |
| 80 | 100-1887 | 1 | Stopper-Camshaft |
| 90 | 98-9350 | 2 | Bolt |
| 100 | 121-2421 | 1 | Idle Gear ASM |
| 110 | 121-2422 | 1 | Bushing |
| 120 | 100-1970 | 1 | Collar-Gear, Idle |
| 130 | 100-1969 | 1 | Ring-Snap |
| 140 | 100-1967 | 1 | Shaft-Gear, Idle |
| 150 | 100-1774 | 3 | Bolt-Flange |

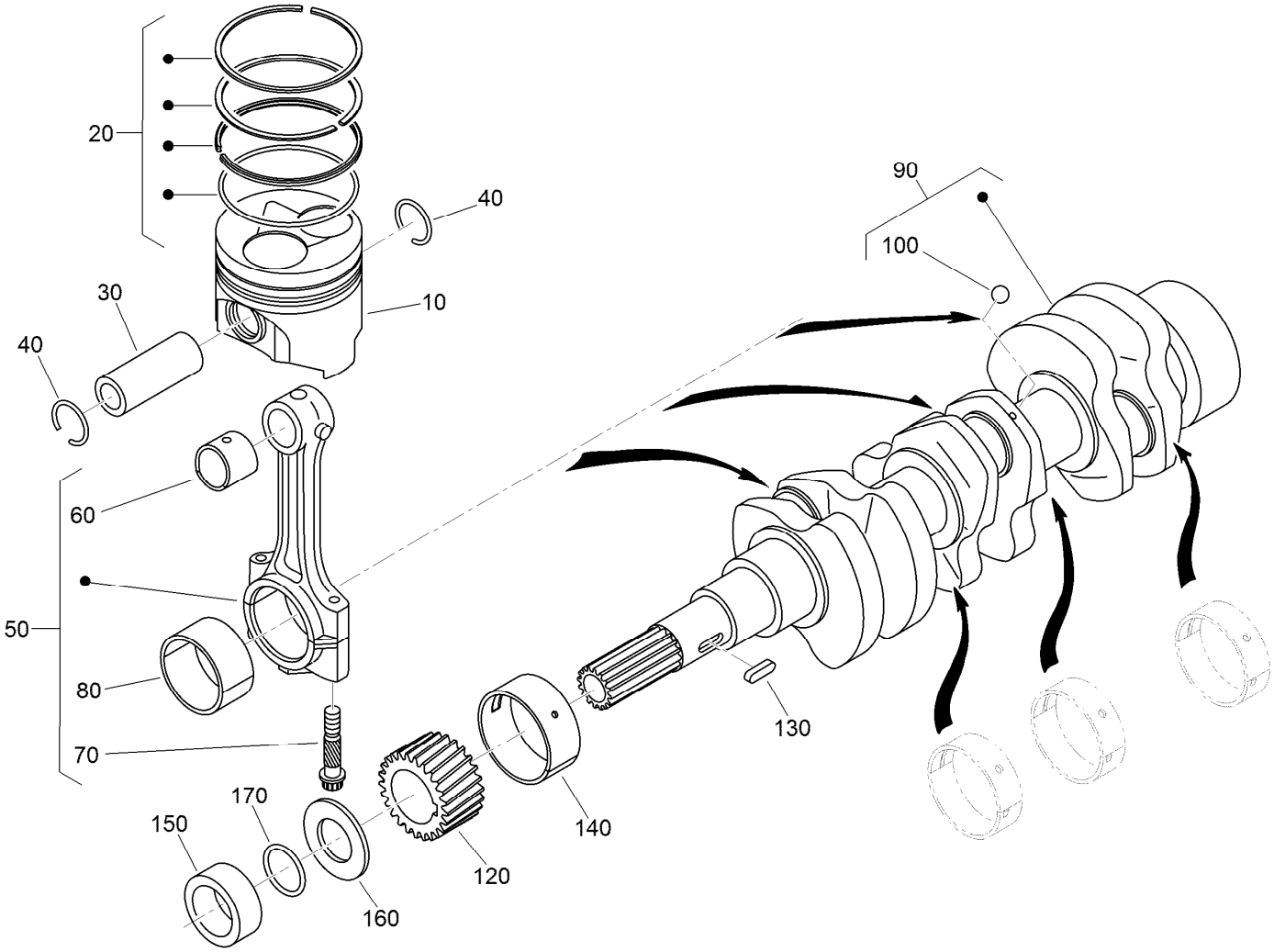


# Piston and Crankshaft Assembly

| Ref. | Part Number | Qty. | Description |
|---|---|---|---|
| 10 | 130-1518 | 3 | Piston |
| 10 | 130-1520 | 3 | Piston |
| 20 | 130-1516 | 3 | Piston Ring ASM |
| 20 | 130-1517 | 3 | Piston Ring ASM |
| 30 | 110-3734 | 3 | Pin-Piston |
| 40 | 100-1835 | 6 | Circlip-Internal |
| 50 | 125-9070 | 3 | Connecting Rod ASM |
| 60 | 110-3736 | 3 | Bushing-Pin, Piston |
| 70 | 100-1999 | 6 | Bolt-Rod, Connecting |
| 80 | 100-2000 | 3 | Metal-Crankpin (STD) |
| 80 | 121-3849 | 3 | Metal-Crankpin (-.20Mm) |

| Ref. | Part Number | Qty. | Description |
|---|---|---|---|
| 80 | 121-2420 | 3 | Metal-Crankpin (-.40Mm) |
| 90 | 117-0308 | 1 | Crankshaft |
| 100 | 100-1791 | 3 | Ball |
| 120 | 100-1891 | 1 | Gear-Crankshaft |
| 130 | 100-1752 | 1 | Key-Feather |
| 140 | 110-3738 | 1 | Metal-Crankshaft (STD) |
| 140 | 121-2424 | 1 | Metal-Crankshaft (-.20Mm) |
| 140 | 121-2425 | 1 | Metal-Crankshaft (-.40Mm) |
| 150 | 100-1890 | 1 | Collar-Crankshaft |
| 160 | 100-1974 | 1 | Slinger-Oil |
| 170 | 100-2209 | 1 | O-Ring |

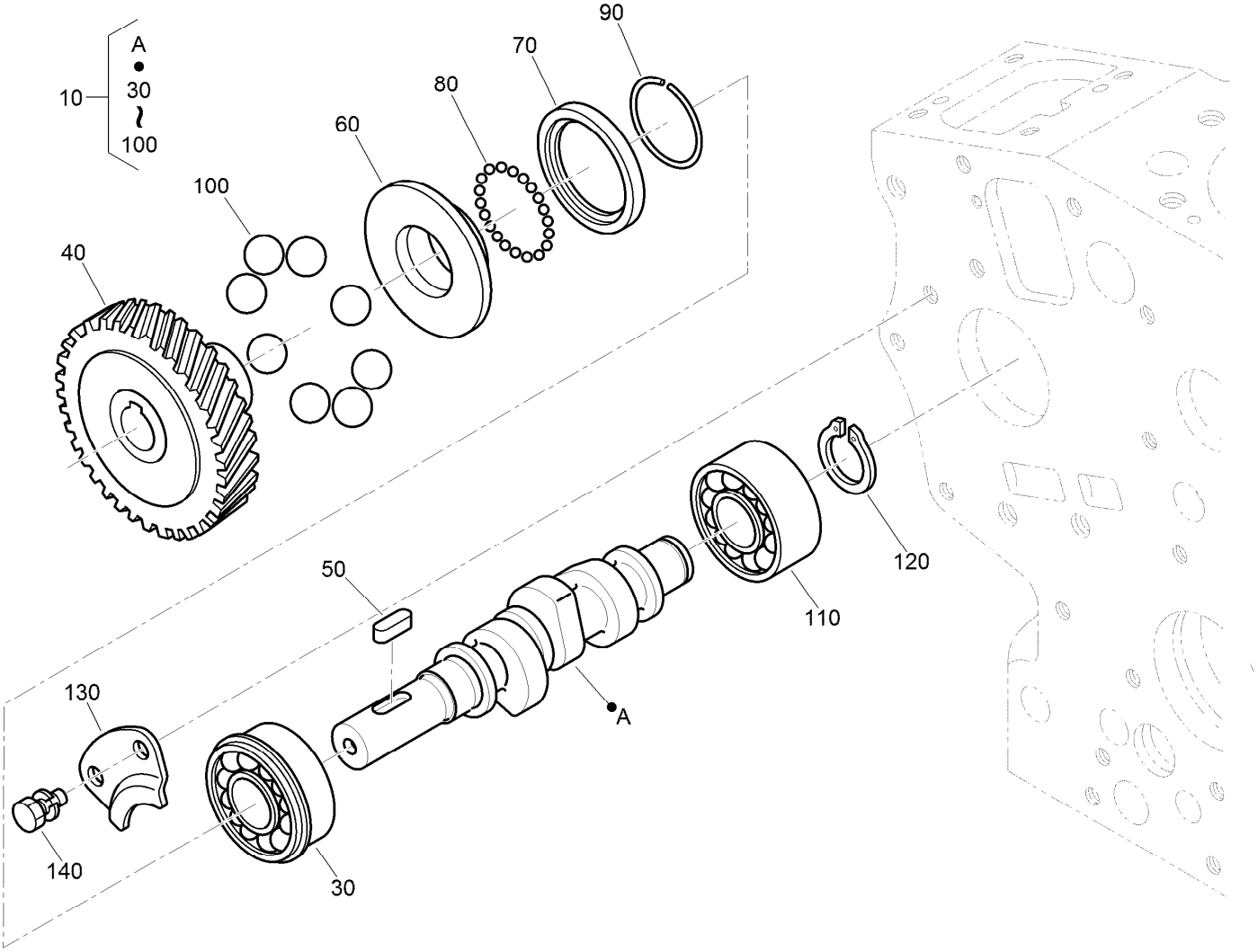


# Fuel Camshaft Assembly

| Ref. | Part Number | Qty. | Description |
|---|---|---|---|
| 10 | 125-9075 | 1 | Fuel Camshaft ASM |
| 30 | 100-1795 | 1 | Bearing-Ball |
| 40 | 100-2006 | 1 | Gear-Pump, Injection |
| 50 | 100-1752 | 1 | Key-Feather |
| 60 | 112-8336 | 1 | Sleeve-Governor |
| 70 | 100-1904 | 1 | Case-Ball, Governor |
| 80 | 100-1790 | 32 | Ball |
| 90 | 100-1843 | 1 | Circ-Clip |
| 100 | 100-1793 | 8 | Ball |
| 110 | 110-3757 | 1 | Bearing-Ball |
| 120 | 100-1784 | 1 | Circ-Clip, External |
| 130 | 100-1888 | 1 | Stopper-Fuel, Camshaft |
| 140 | 98-9350 | 2 | Bolt |

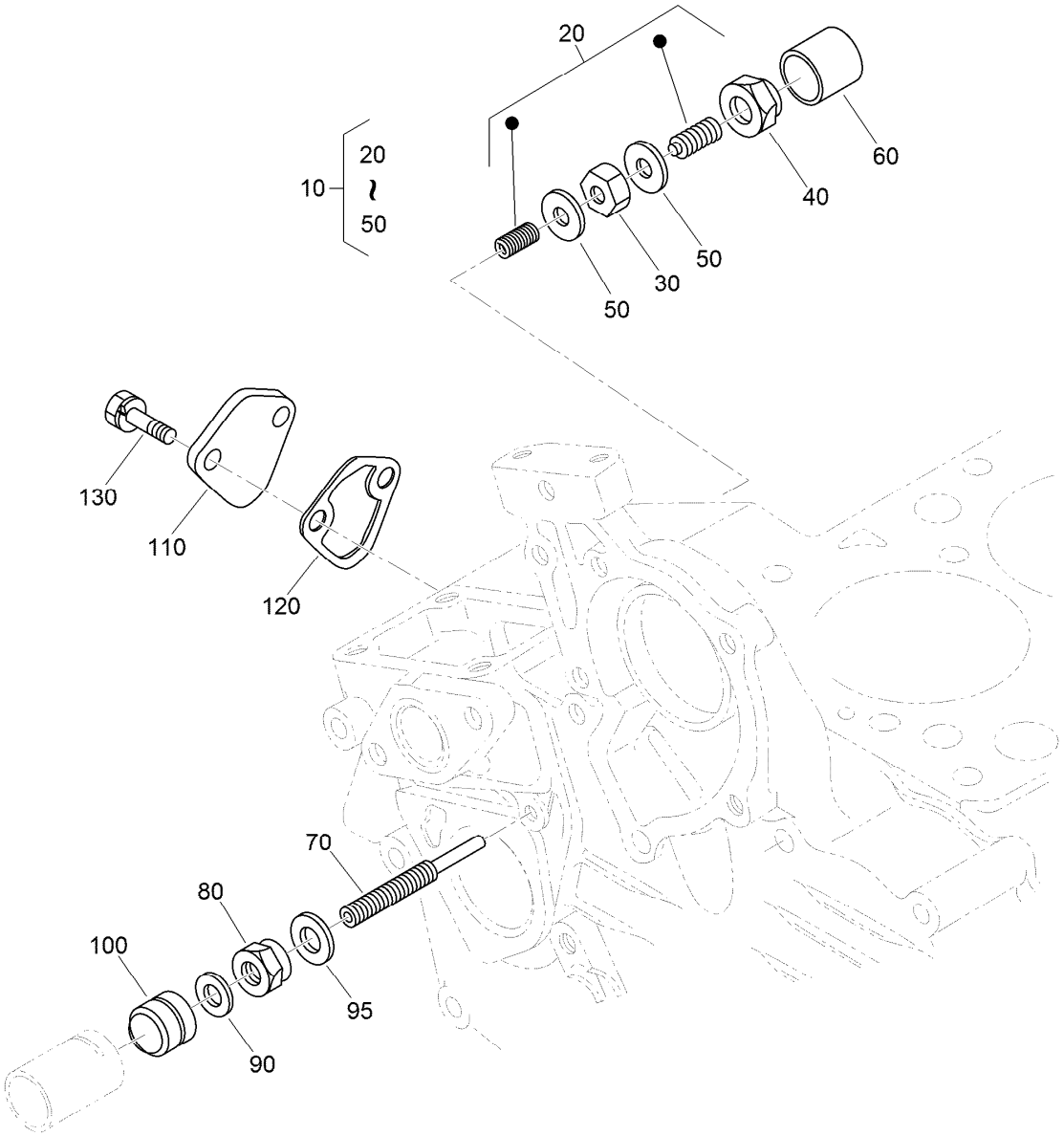


# Idle Apparatus and Fuel Pump Cover Assembly

| *Ref.* | *Part Number* | *Qty.* | *Description* |
|---|---|---|---|
| 10 | 100-1898 | 1 | Idle Apparatus ASM |
| 20 | 100-1899 | 1 | Adjusting Bolt ASM |
| 30 | 100-1846 | 1 | Nut |
| 40 | 100-1901 | 1 | Nut-Cap |
| 50 | 98-7428 | 2 | Gasket |
| 60 | 100-1902 | 1 | Cap |
| 70 | 110-3758 | 1 | Bolt-Adjusting |
| 80 | 100-2175 | 1 | Nut-Lock |
| 90 | 98-7654 | 1 | Gasket |
| 95 | 107-9081 | 1 | Gasket |
| 100 | 99-8387 | 1 | Nut-Cap |
| 110 | 99-3514 | 1 | Cover |
| 120 | 98-9636 | 1 | Gasket-Pump, Fuel |
| 130 | 98-7692 | 2 | Bolt |

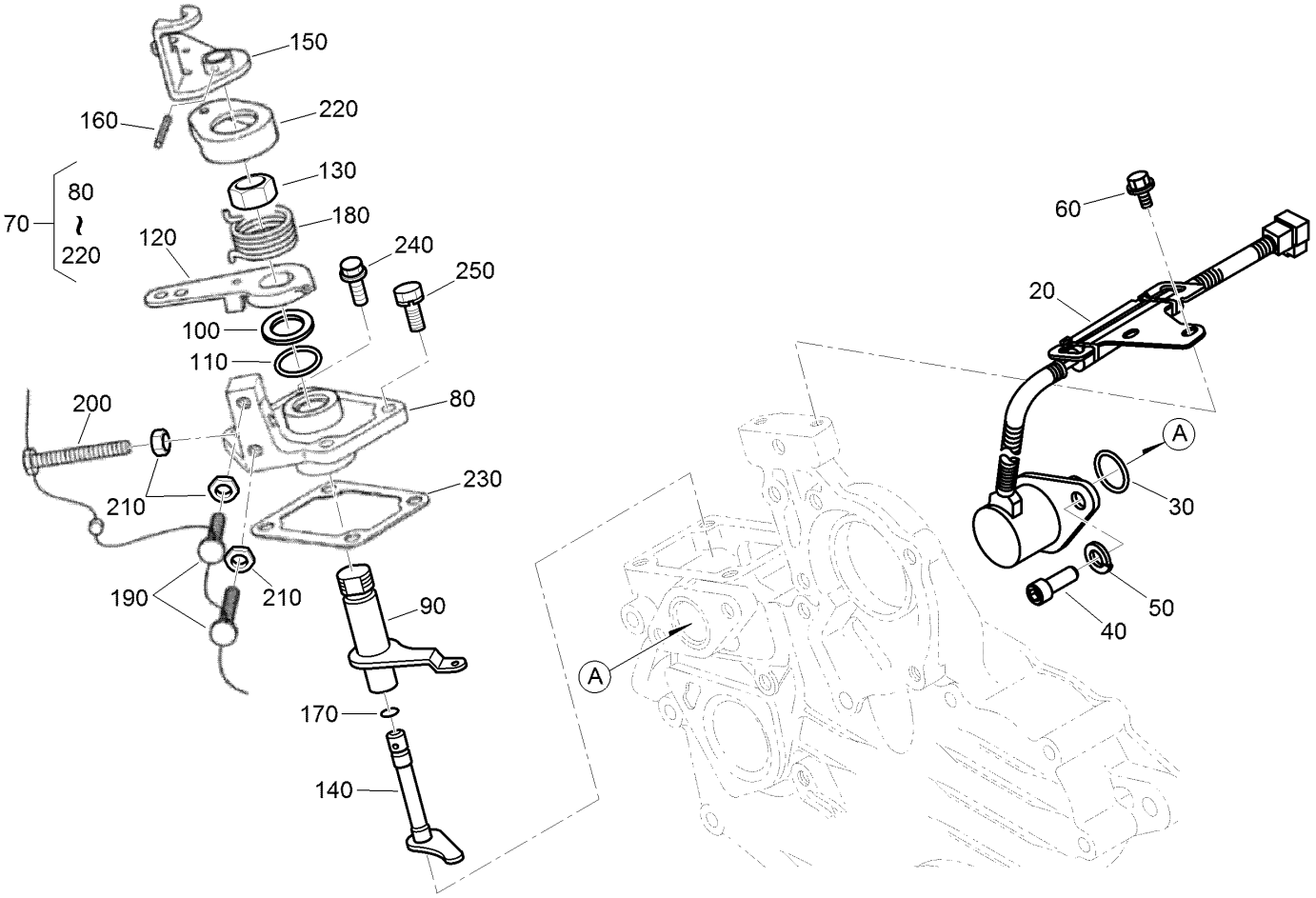


# Stop Solenoid and Speed Control Plate Assembly

| Ref. | Part Number | Qty. | Description |
|---|---|---|---|
| 20 | 117-2719 | 1 | Solenoid Stop ASM |
| 30 | 110-3762 | 1 | O-Ring |
| 40 | 110-3763 | 2 | Bolt-HSH |
| 50 | 98-7699 | 2 | Washer-Spring |
| 60 | 100-1774 | 2 | Bolt-Flange |
| 70 | 110-3769 | 1 | Speed Control Plate ASM |
| 80 | 110-3770 | 1 | Plate-Control, Speed |
| 90 | 110-3771 | 1 | Lever-Governor |
| 100 | 110-3772 | 1 | Collar |
| 110 | 100-2208 | 1 | O-Ring |
| 120 | 110-3773 | 1 | Lever-Control, Speed |
| 130 | 110-3774 | 1 | Nut-Control, Speed |

| Ref. | Part Number | Qty. | Description |
|---|---|---|---|
| 140 | 110-3775 | 1 | Shaft-Lever |
| 150 | 110-3776 | 1 | Lever-Stop, Engine |
| 160 | 110-3777 | 1 | Pin-Spring |
| 170 | 100-2207 | 1 | O-Ring |
| 180 | 110-3778 | 1 | Spring-Return |
| 190 | 120-3133 | 2 | Screw-Stopper |
| 200 | 120-3134 | 1 | Bolt |
| 210 | 98-7572 | 3 | Nut |
| 220 | 110-3779 | 1 | Cap |
| 230 | 100-1962 | 1 | Gasket-Plate, Control |
| 240 | 127-0403 | 2 | Bolt-Flange |
| 250 | 112-2507 | 2 | Bolt |

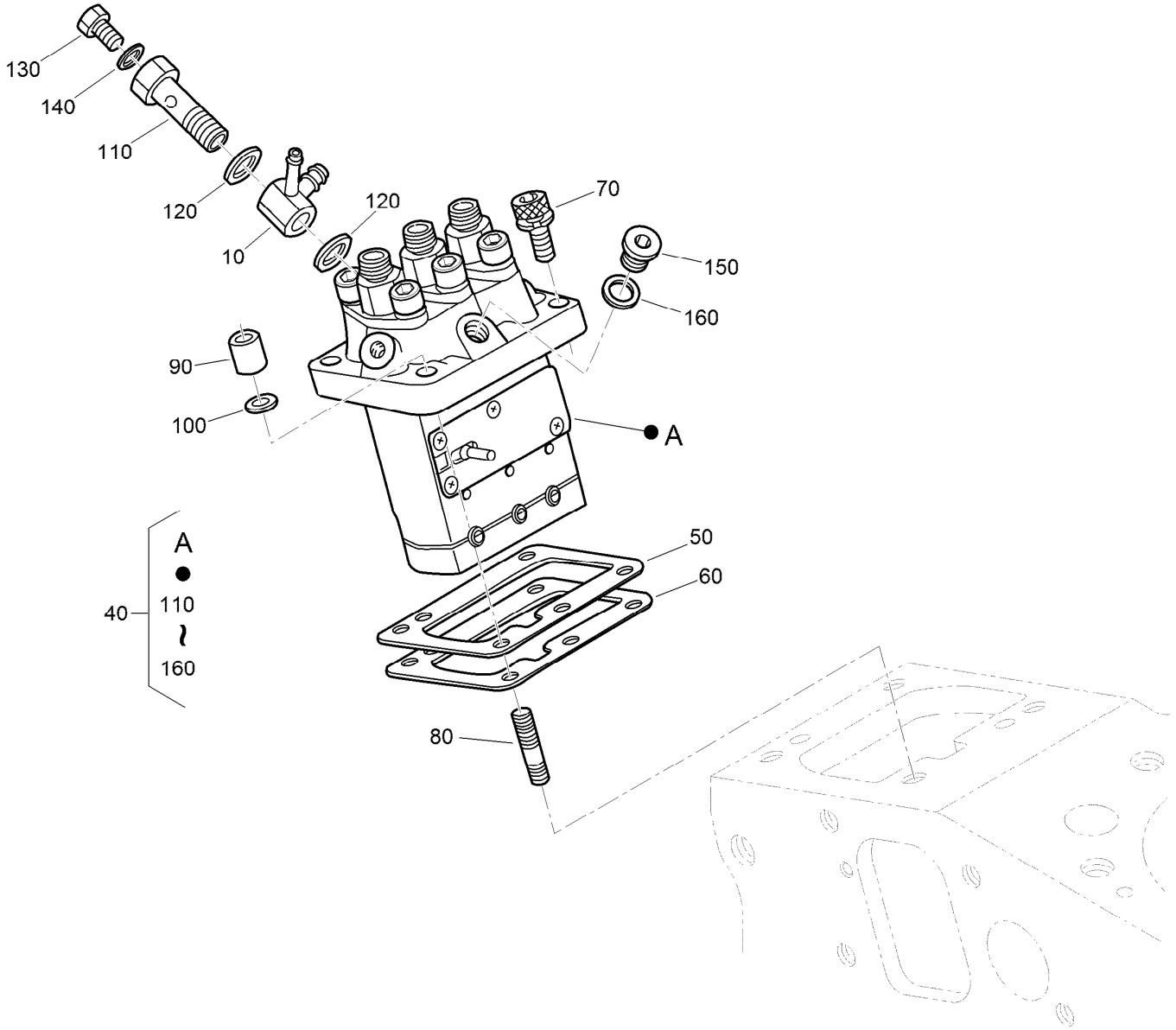


# Injection Pump Assembly

| Ref. | Part Number | Qty. | Description |
|---|---|---|---|
| 10 | 110-3764 | 1 | Joint |
| 40 | 110-3765 | 1 | Injection Pump ASM |
| 50 | 115-3045 | 1 | Shim-Injection (0.175Mm) |
| 50 | 98-9456 | 1 | Shim-Injection (0.20Mm) |
| 50 | 98-9457 | 1 | Shim-Injection (0.25Mm) |
| 60 | 98-9458 | 1 | Shim-Injection (0.30Mm) |
| 60 | 115-3046 | 1 | Shim-Injection (0.35Mm) |
| 70 | 117-7564 | 2 | Bolt-Hex Soc HD |
| 80 | 98-9438 | 2 | Stud |

| Ref. | Part Number | Qty. | Description |
|---|---|---|---|
| 90 | 98-9440 | 2 | Nut-Cap |
| 100 | 98-7699 | 2 | Washer-Spring |
| 110 | 100-1896 | 1 | Screw-Hollow |
| 120 | 98-9445 | 2 | Gasket |
| 130 | 98-9430 | 1 | Screw |
| 140 | 98-9446 | 1 | Gasket |
| 150 | 98-9466 | 1 | Plug |
| 160 | 98-9451 | 1 | Gasket |

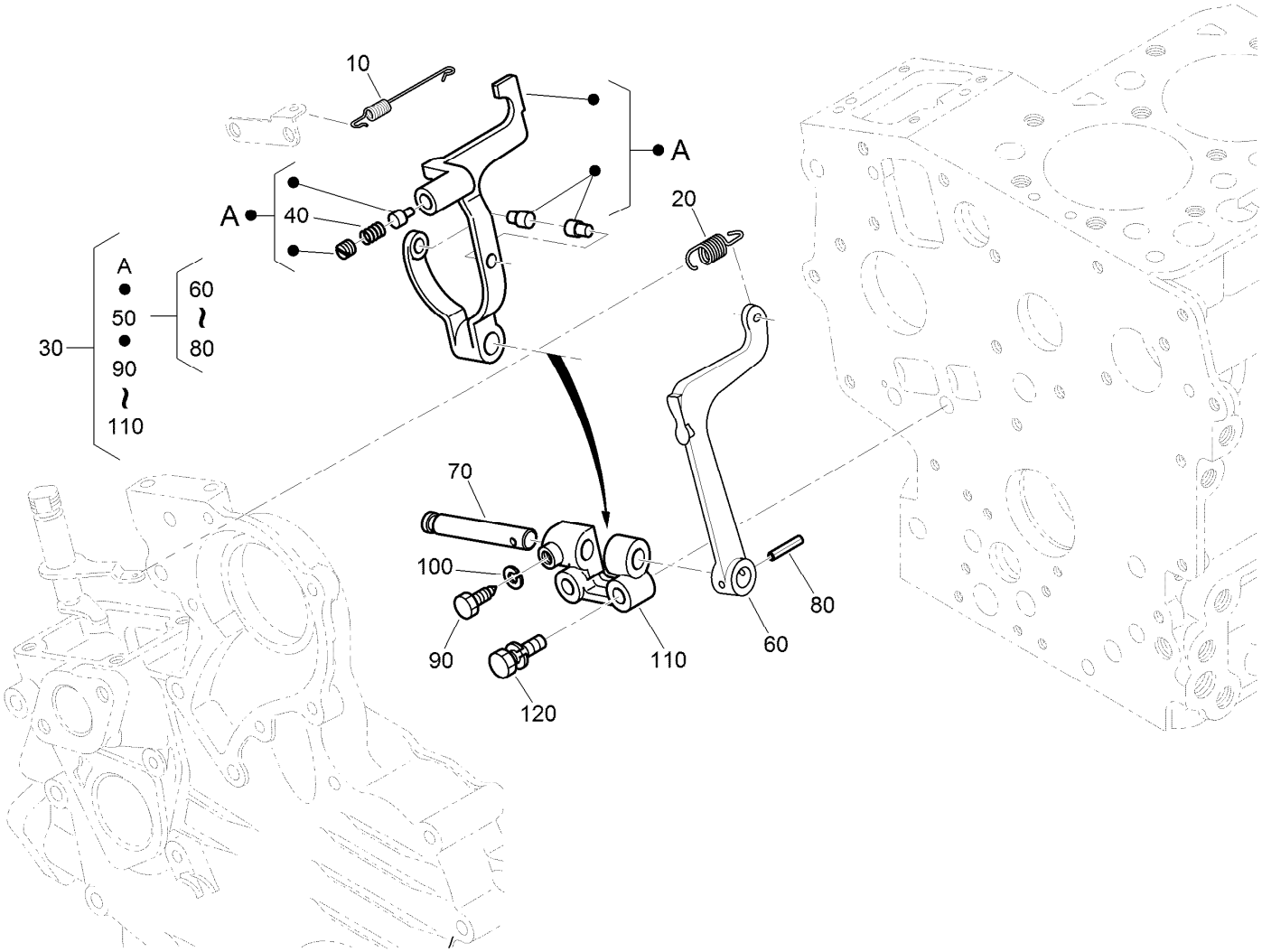


# Governor Assembly

| Ref. | Part Number | Qty. | Description |
|---|---|---|---|
| 10 | 110-3766 | 1 | Spring-Start |
| 20 | 110-3767 | 1 | Spring-Governor |
| 30 | 130-1367 | 1 | Fork Lever ASM |
| 40 | 121-3803 | 1 | Spring |
| 50 | 100-1905 | 1 | Fork Lever ASM |
| 60 | 100-1907 | 1 | Lever-Fork |
| 70 | 100-1908 | 1 | Shaft-Lever, Fork |
| 80 | 100-1751 | 1 | Pin-Spring |
| 90 | 100-1845 | 1 | Bolt |
| 100 | 127-0408 | 1 | Washer-Lock, Spring |
| 110 | 100-1909 | 1 | Holder-Lever, Fork |
| 120 | 100-1763 | 2 | Bolt |

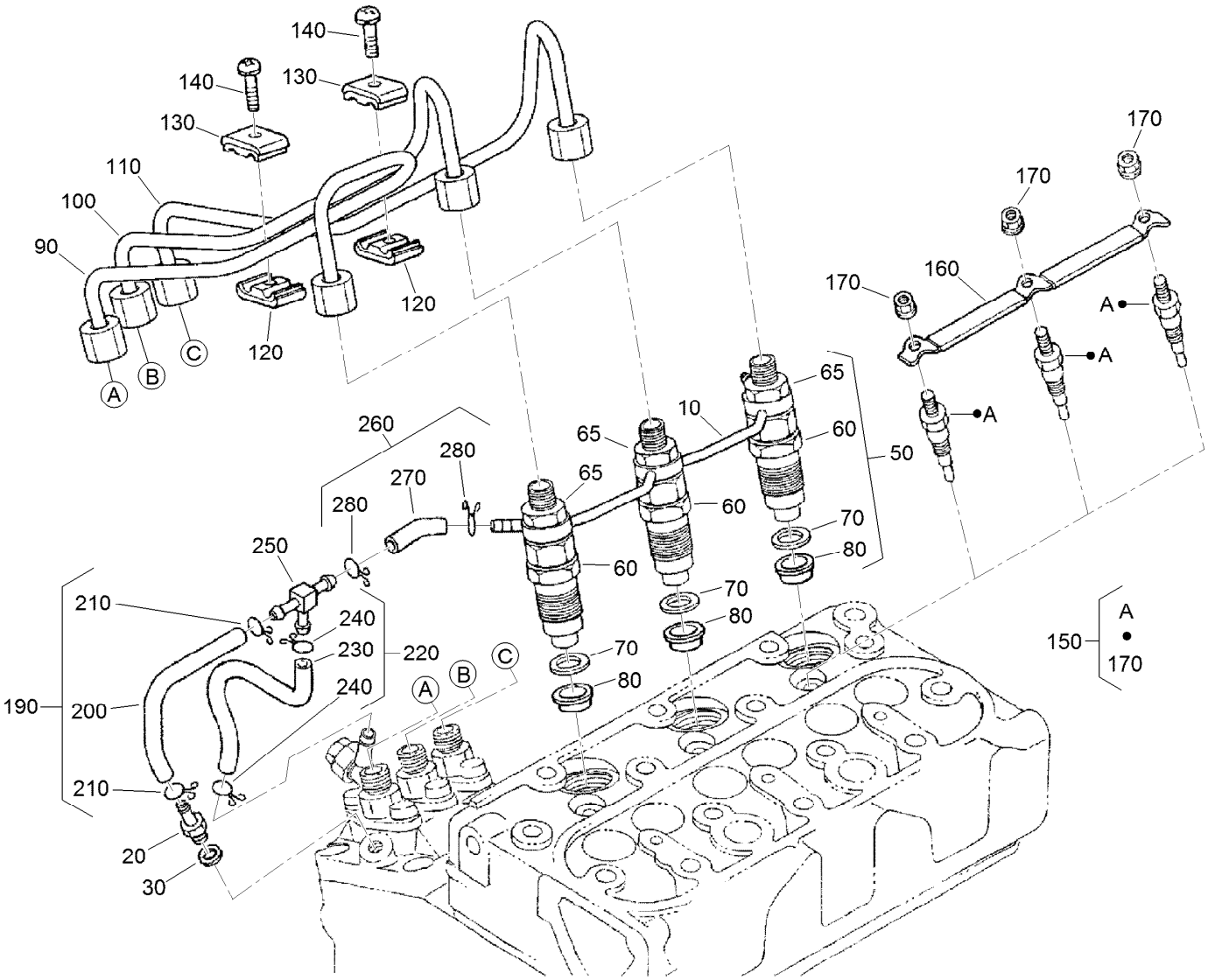


# Nozzle Holder and Glow Plug Assembly

| Ref. | Part Number | Qty. | Description |
|---|---|---|---|
| 10 | 110-3780 | 1 | Over Flow Pipe ASM |
| 20 | 98-9431 | 1 | Screw-Bleeder, Air |
| 30 | 98-7654 | 1 | Gasket |
| 50 | 130-1305 | 3 | Nozzle Holder Kit |
| 60 | 130-1303 | 3 | Nozzle Holder ASM |
| 65 | 121-2411 | 3 | Nut |
| 70 | 98-7676 | 3 | Gasket |
| 80 | 98-7677 | 3 | Seal-Heat |
| 90 | 130-1522 | 1 | Pipe-Injection |
| 100 | 130-1523 | 1 | Pipe-Injection |
| 110 | 130-1541 | 1 | Pipe-Injection |
| 120 | 98-7682 | 2 | Clamp-Pipe |
| 130 | 98-7683 | 2 | Clamp-Pipe |
| 140 | 98-7684 | 2 | Screw (W/Washer) |

| Ref. | Part Number | Qty. | Description |
|---|---|---|---|
| 150 | 130-1411 | 3 | Plug-Glow |
| 160 | 110-3784 | 1 | Cord-Plug, Glow |
| 170 | 99-8377 | 3 | Nut-Flange |
| 190 | 110-3785 | 1 | Fuel Tube ASM |
| 200 | 110-3786 | 1 | Tube-Fuel |
| 210 | 98-7671 | 2 | Clip-Pipe |
| 220 | 110-3787 | 1 | Fuel Tube ASM |
| 230 | 110-3788 | 1 | Tube-Fuel |
| 240 | 98-7671 | 2 | Clip-Pipe |
| 250 | 112-8338 | 1 | Pipe-Joint, T |
| 260 | 110-3790 | 1 | Fuel Tube ASM |
| 270 | 110-3791 | 1 | Tube-Fuel |
| 280 | 98-7671 | 2 | Clip-Pipe |

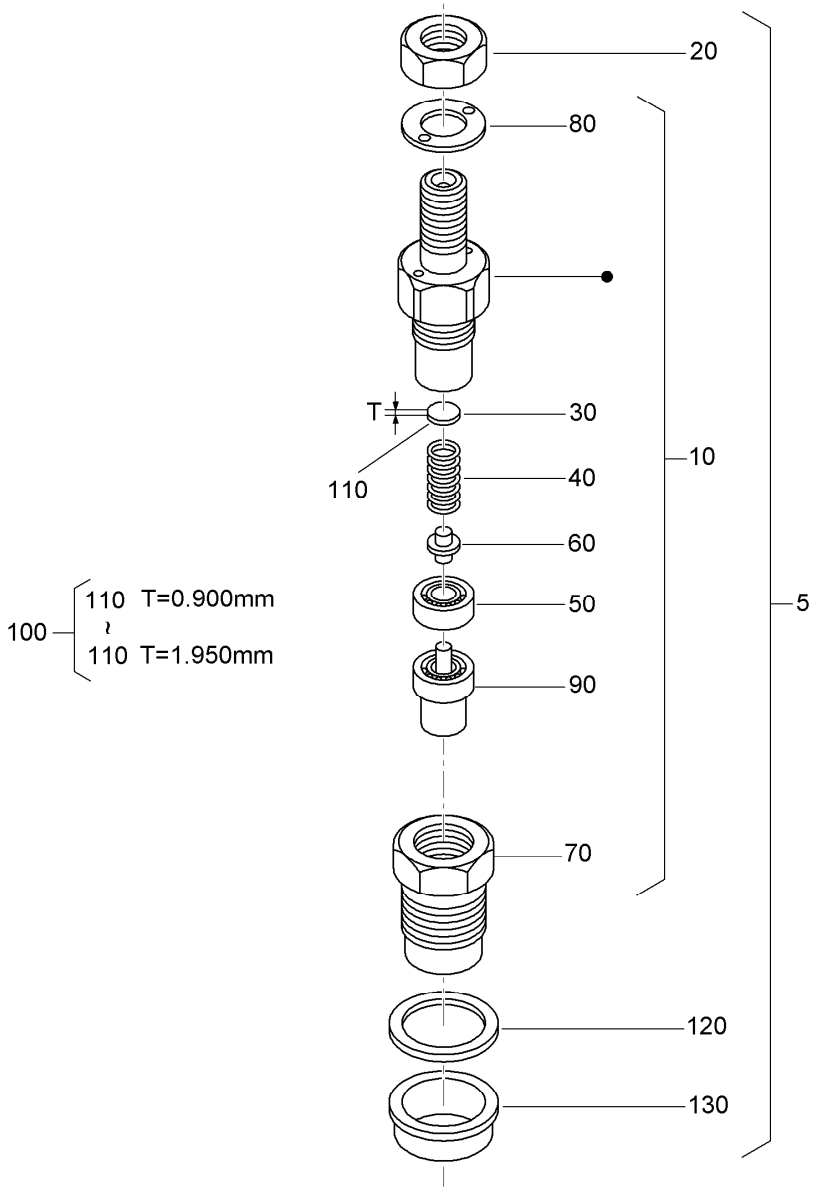


# Nozzle Holder Assembly

| Ref. | Part Number | Qty. | Description |
|---|---|---|---|
| 5 | 130-1305 | 3 | Nozzle Holder Kit |
| 10 | 130-1303 | 3 | Nozzle Holder ASM |
| 20 | 121-2411 | 3 | Nut |
| 30 | 99-8302 | 3 | Washer-Adjusting |
| 40 | 99-8303 | 3 | Spring-Nozzle |
| 50 | 99-8304 | 3 | Spacer-Distance |
| 60 | 99-8305 | 3 | Rod-Push |
| 70 | 130-1304 | 3 | Nut-Nozzle |
| 80 | 99-8307 | 3 | Washer-Plain |
| 90 | 130-1497 | 3 | Nozzle-Piece |
| 100 | 98-9448 | 3 | Adjusting Washer ASM |
| 110 | 98-7642 | 3 | Washer-Adjusting (0.900Mm) |
| 110 | 98-7841 | 3 | Washer-Adjusting (0.925Mm) |
| 110 | 98-7842 | 3 | Washer-Adjusting (0.950Mm) |
| 110 | 98-7843 | 3 | Washer-Adjusting (0.975Mm) |
| 110 | 98-7844 | 3 | Washer-Adjusting (1.000Mm) |
| 110 | 98-7845 | 3 | Washer-Adjusting (1.025Mm) |
| 110 | 98-7846 | 3 | Washer-Adjusting (1.050Mm) |
| 110 | 98-7847 | 3 | Washer-Adjusting (1.075Mm) |
| 110 | 98-7848 | 3 | Washer-Adjusting (1.100Mm) |
| 110 | 98-7849 | 3 | Washer-Adjusting (1.125Mm) |
| 110 | 98-7850 | 3 | Washer-Adjusting (1.150Mm) |
| 110 | 98-7851 | 3 | Washer-Adjusting (1.175Mm) |
| 110 | 98-7852 | 3 | Washer-Adjusting (1.200Mm) |
| 110 | 98-7853 | 3 | Washer-Adjusting (1.225Mm) |
| 110 | 98-7854 | 3 | Washer-Adjusting (1.250Mm) |

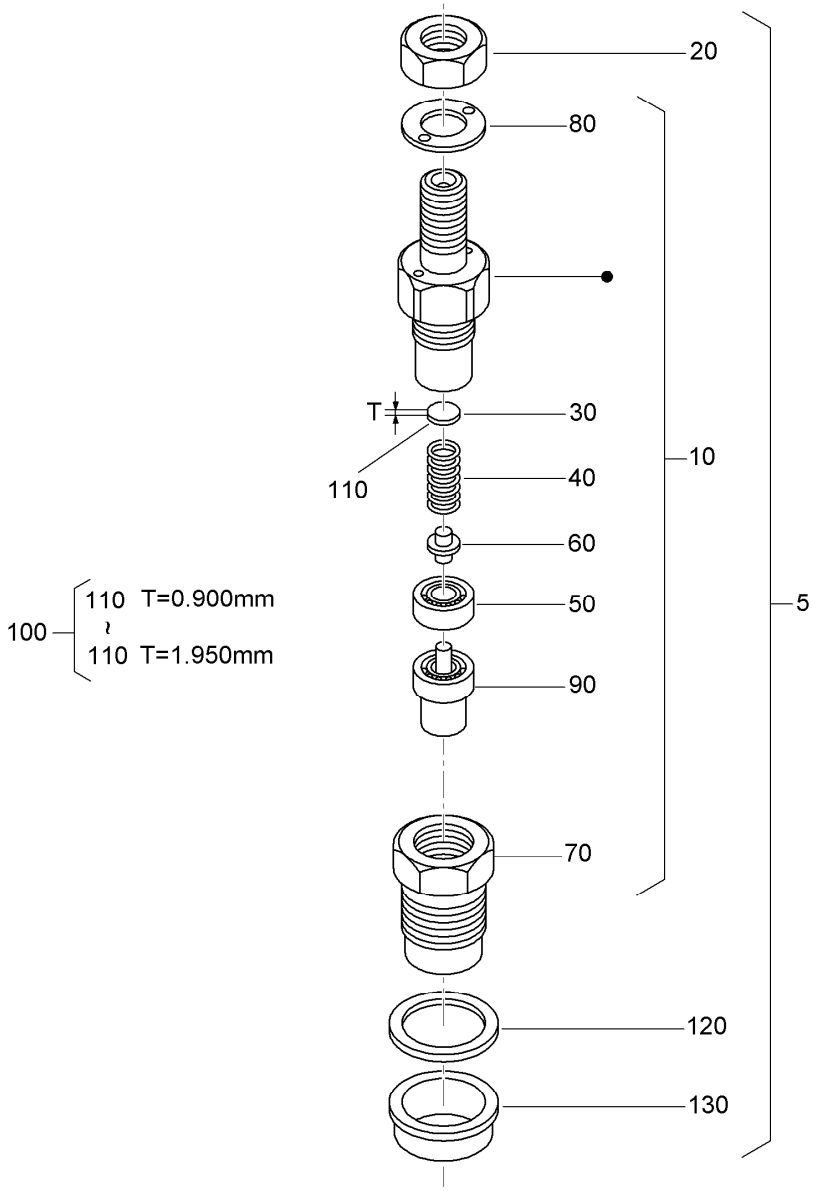


# Nozzle Holder Assembly (continued)

| Ref. | Part Number | Qty. | Description |
|---|---|---|---|
| 110 | 98-7855 | 3 | Washer-Adjusting (1.275Mm) |
| 110 | 98-7856 | 3 | Washer-Adjusting 1.300Mm) |
| 110 | 98-7857 | 3 | Washer-Adjusting (1.325Mm) |
| 110 | 98-7858 | 3 | Washer-Adjusting (1.350Mm) |
| 110 | 98-7859 | 3 | Washer-Adjusting (1.375Mm) |
| 110 | 98-7860 | 3 | Washer-Adjusting (1.400Mm) |
| 110 | 98-7861 | 3 | Washer-Adjusting (1.425Mm) |
| 110 | 98-7862 | 3 | Washer-Adjusting (1.450Mm) |
| 110 | 98-7863 | 3 | Washer-Adjusting (1.475Mm) |
| 110 | 98-7864 | 3 | Washer-Adjusting (1.500Mm) |

| Ref. | Part Number | Qty. | Description |
|---|---|---|---|
| 110 | 98-7865 | 3 | Washer-Adjusting (1.525Mm) |
| 110 | 98-7866 | 3 | Washer-Adjusting (1.550Mm) |
| 110 | 98-7867 | 3 | Washer-Adjusting (1.575Mm) |
| 110 | 98-7868 | 3 | Washer-Adjusting (1.600Mm) |
| 110 | 98-7869 | 3 | Washer-Adjusting (1.625Mm) |
| 110 | 98-7870 | 3 | Washer-Adjusting (1.650Mm) |
| 110 | 98-7871 | 3 | Washer-Adjusting (1.675Mm) |
| 110 | 98-7872 | 3 | Washer-Adjusting (1.700Mm) |
| 110 | 98-7873 | 3 | Washer-Adjusting (1.725Mm) |
| 110 | 98-7874 | 3 | Washer-Adjusting (1.750Mm) |

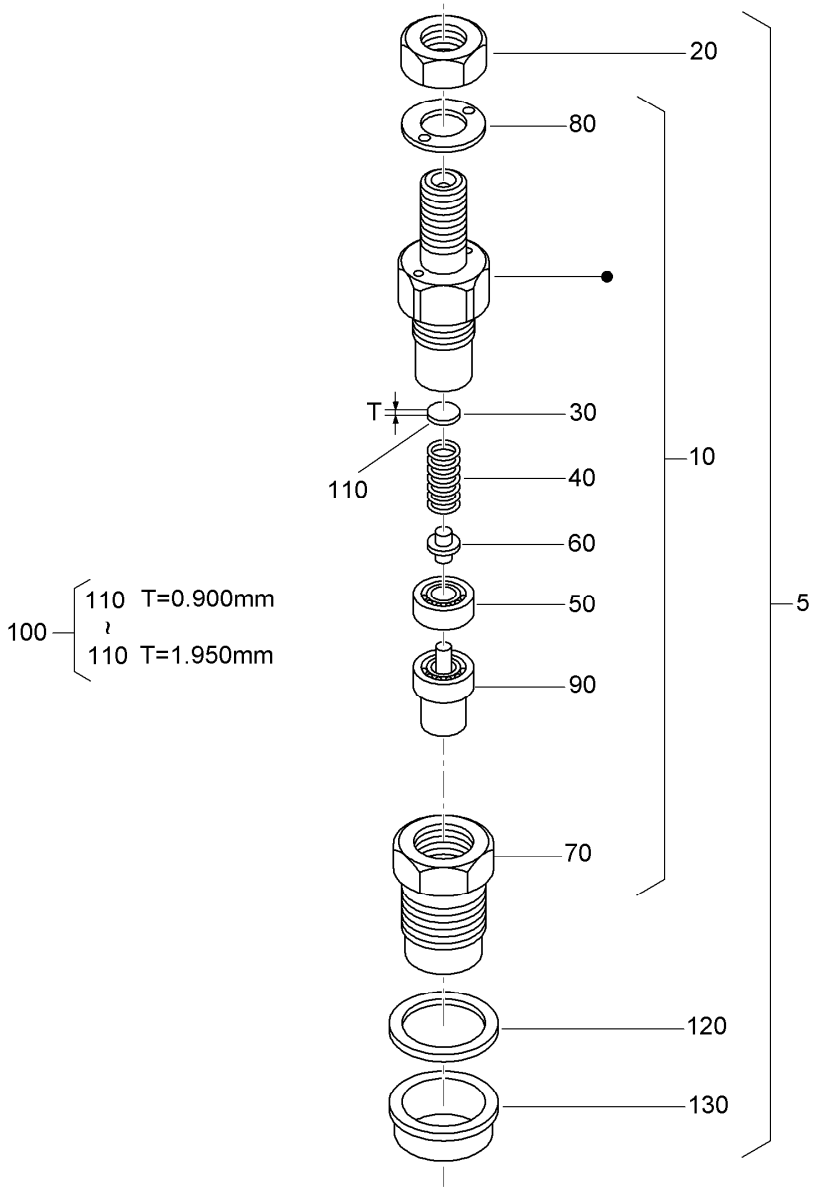


# Nozzle Holder Assembly (continued)

| Ref. | Part Number | Qty. | Description |
|---|---|---|---|
| 110 | 98-7875 | 3 | Washer-Adjusting (1.775Mm) |
| 110 | 98-7876 | 3 | Washer-Adjusting (1.800Mm) |
| 110 | 98-7877 | 3 | Washer-Adjusting (1.825Mm) |
| 110 | 98-7878 | 3 | Washer-Adjusting (1.850Mm) |
| 110 | 98-7879 | 3 | Washer-Adjusting (1.875Mm) |

| Ref. | Part Number | Qty. | Description |
|---|---|---|---|
| 110 | 98-7880 | 3 | Washer-Adjusting (1.900Mm) |
| 110 | 98-7881 | 3 | Washer-Adjusting (1.925Mm) |
| 110 | 98-7882 | 3 | Washer-Adjusting (1.950Mm) |
| 120 | 98-7676 | 3 | Gasket |
| 130 | 98-7677 | 3 | Seal-Heat |

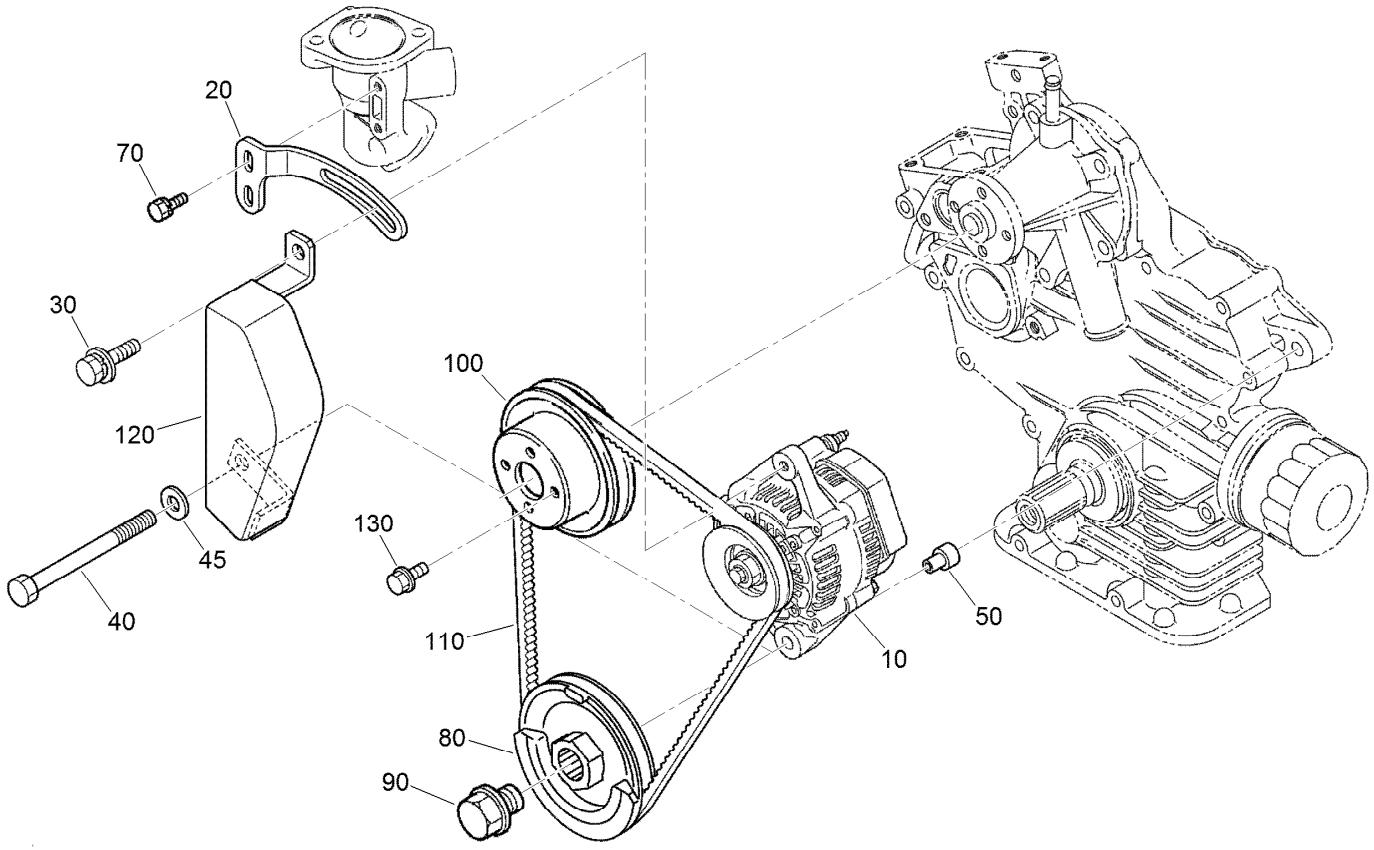


# Alternator and Pulley Assembly

| *Ref.* | *Part Number* | *Qty.* | *Description* |
|---|---|---|---|
| 10 | 98-9474 | 1 | Alternator ASM |
| 20 | 110-3792 | 1 | Stay-Alternator |
| 30 | 121-3800 | 1 | Bolt-Sems |
| 40 | 110-3793 | 1 | Bolt |
| 45 | 120-5832 | 1 | Washer-Plain |
| 50 | 110-3794 | 1 | Collar |
| 70 | 98-7692 | 2 | Bolt |
| 80 | 110-3795 | 1 | Pulley-Drive, Fan |
| 90 | 100-1978 | 1 | Bolt |
| 100 | 100-1921 | 1 | Pulley-Fan |
| 110 | 110-3796 | 1 | Belt-V |
| 120 | 110-3797 | 1 | Cover |
| 130 | 99-8363 | 4 | Bolt-Flange |

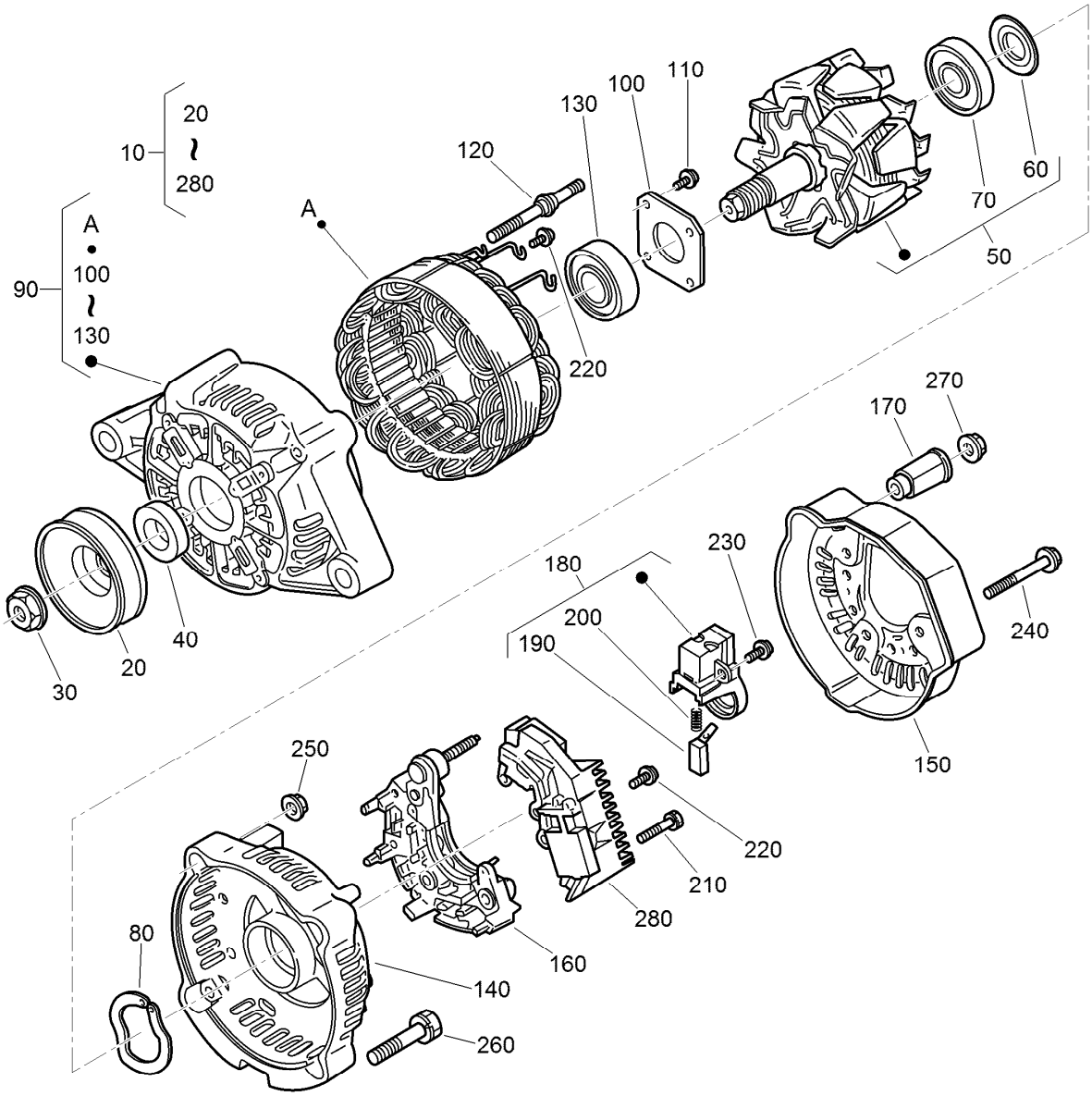


# Alternator Components Assembly

| Ref. | Part Number | Qty. | Description |
|---|---|---|---|
| 10 | 98-9474 | 1 | Alternator ASM |
| 20 | 98-9453 | 1 | Pulley-Dynamo |
| 30 | 98-7708 | 1 | Nut |
| 40 | 98-7709 | 1 | Collar |
| 50 | 107-0136 | 1 | Rotor ASM |
| 60 | 98-7711 | 1 | Cover-Bearing |
| 70 | 107-0138 | 1 | Bearing-Ball |
| 80 | 98-7713 | 1 | Washer-Thrust |
| 90 | 107-0139 | 1 | Drive End Frame ASM |
| 100 | 98-7715 | 1 | Plate-Retainer |
| 110 | 98-7716 | 4 | Screw-Head, Round |
| 120 | 98-7717 | 2 | Bolt-Through |
| 130 | 107-0137 | 1 | Bearing-Ball |
| 140 | 107-9087 | 1 | Frame-End |

| Ref. | Part Number | Qty. | Description |
|---|---|---|---|
| 150 | 107-0140 | 1 | Cover-End |
| 160 | 127-1612 | 1 | Rectifier ASM |
| 170 | 98-7722 | 1 | Bushing-Insulation |
| 180 | 107-0141 | 1 | Brush Holder ASM |
| 190 | 98-7724 | 2 | Brush |
| 200 | 98-7725 | 2 | Spring-Brush |
| 210 | 98-7726 | 2 | Screw-Head, Round |
| 220 | 98-7727 | 6 | Screw-Head, Round |
| 230 | 98-7728 | 1 | Screw-Head, Round |
| 240 | 98-7729 | 3 | Bolt |
| 250 | 98-7730 | 2 | Nut |
| 260 | 98-7731 | 2 | Bolt |
| 270 | 98-7732 | 1 | Nut |
| 280 | 110-3799 | 1 | Regulator ASM |

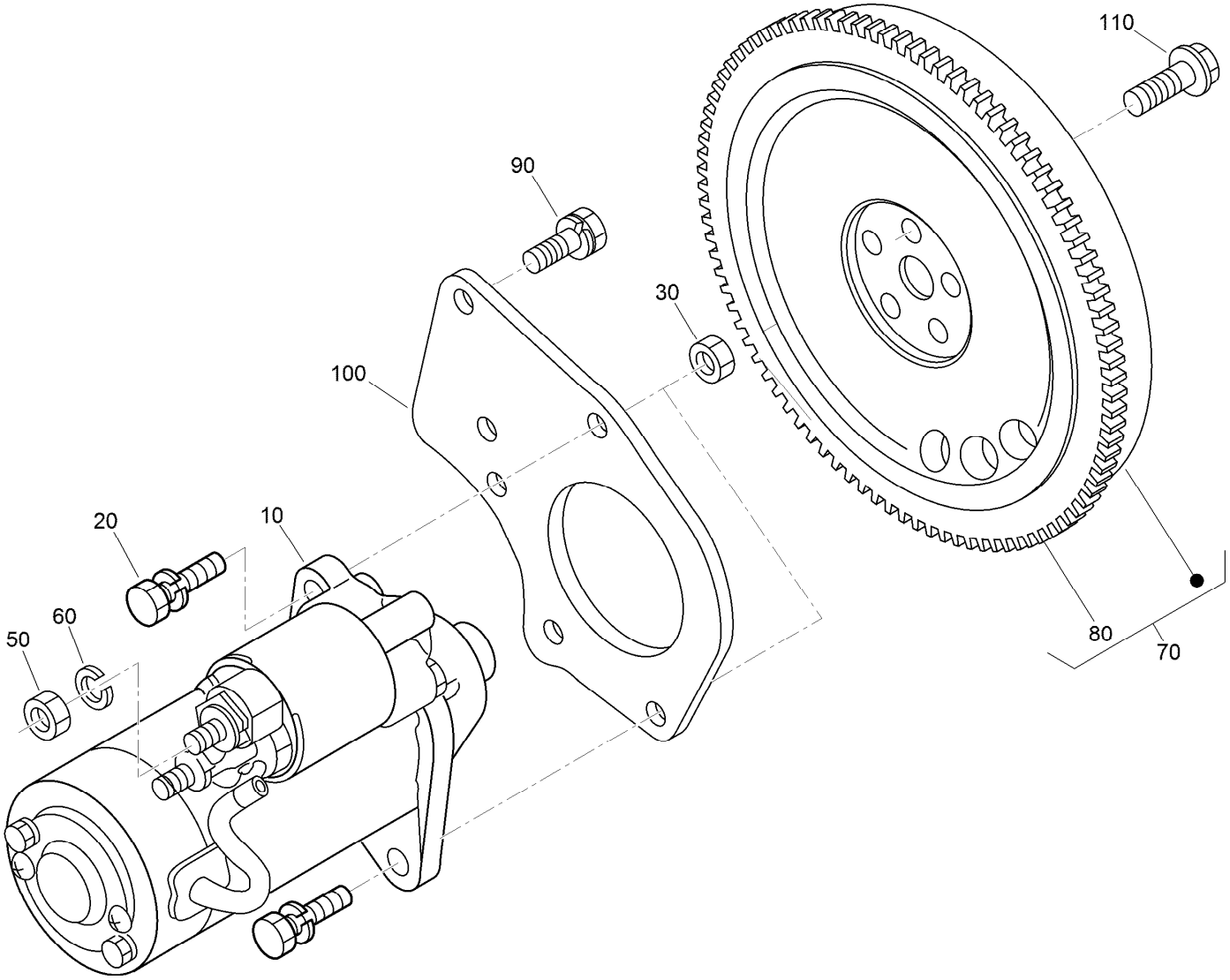


# Starter and Flywheel Assembly

| *Ref.* | *Part Number* | *Qty.* | *Description* |
|---|---|---|---|
| 10 | 110-3800 | 1 | Starter ASM |
| 20 | 98-7697 | 2 | Bolt |
| 30 | 98-7534 | 2 | Nut |
| 50 | 98-7534 | 1 | Nut |
| 60 | 105-2893 | 1 | Washer-Spring |
| 70 | 130-1496 | 1 | Flywheel ASM |
| 80 | 127-1604 | 1 | Gear-Ring |
| 90 | 100-1930 | 5 | Bolt-Flywheel |
| 100 | 117-0323 | 1 | Plate-End, Rear |
| 110 | 110-3754 | 3 | Bolt |

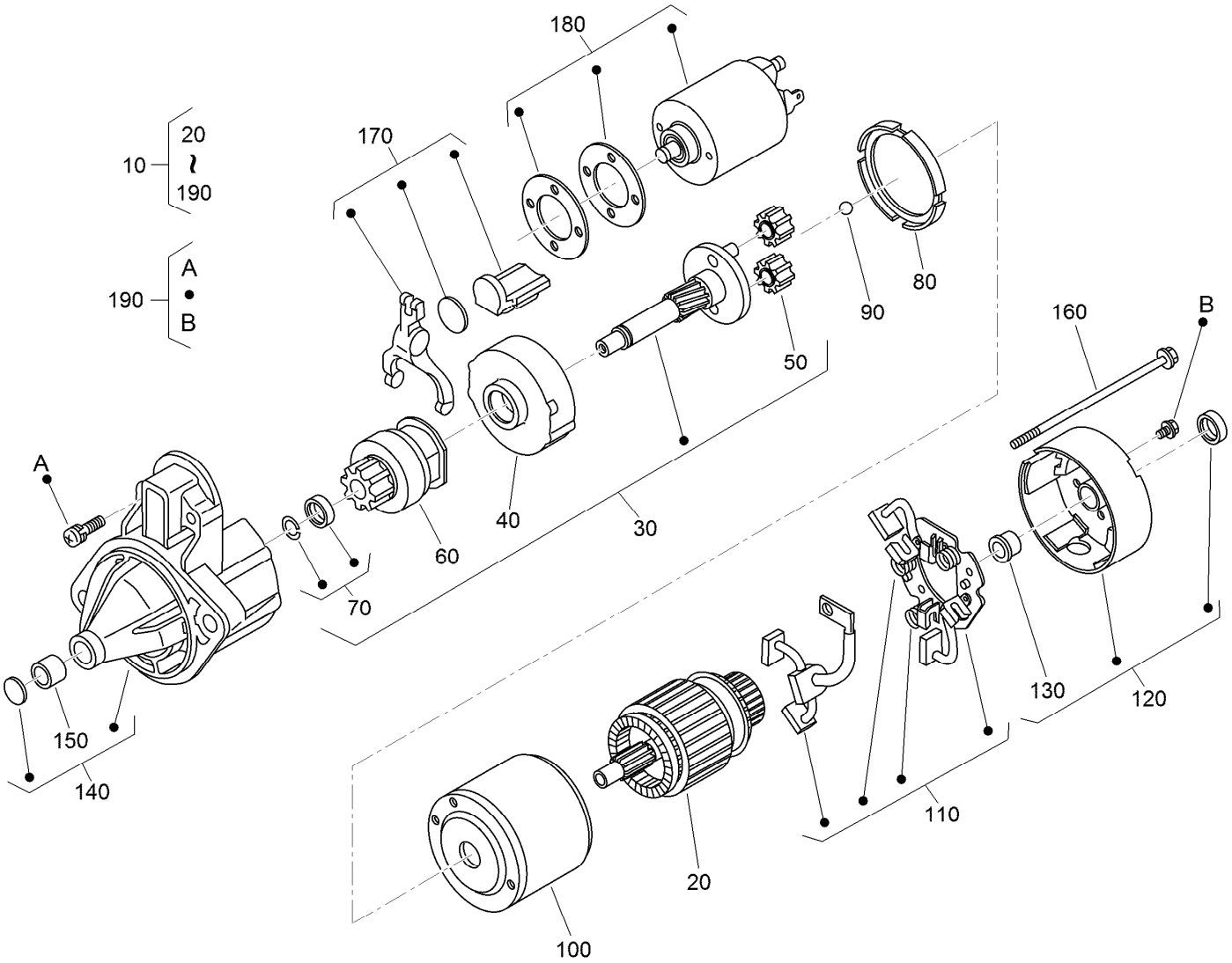


# Starter Component Assembly

| Ref. | Part Number | Qty. | Description |
|---|---|---|---|
| 10 | 110-3800 | 1 | Starter ASM |
| 20 | 110-3801 | 1 | Armature |
| 30 | 110-3802 | 1 | Shaft ASM |
| 40 | 120-3142 | 1 | Gear-Internal |
| 50 | 110-3804 | 3 | Gear-Planetary |
| 60 | 110-3805 | 1 | Clutch-Running, Over |
| 70 | 110-3806 | 1 | Stopper |
| 80 | 120-3143 | 1 | Gasket |
| 90 | 110-3808 | 1 | Ball |
| 100 | 130-1295 | 1 | Yoke |

| Ref. | Part Number | Qty. | Description |
|---|---|---|---|
| 110 | 110-3810 | 1 | Brush Holder ASM |
| 120 | 110-3811 | 1 | Rear Bracket ASM |
| 130 | 110-3812 | 1 | Bushing |
| 140 | 110-3813 | 1 | Front Bracket ASM |
| 150 | 110-3814 | 1 | Bushing |
| 160 | 110-3815 | 2 | Bolt |
| 170 | 110-3816 | 1 | Fork Lever ASM |
| 180 | 125-9099 | 1 | Switch-Magnetic |
| 190 | 110-3818 | 1 | Screws (Set Of 4) |

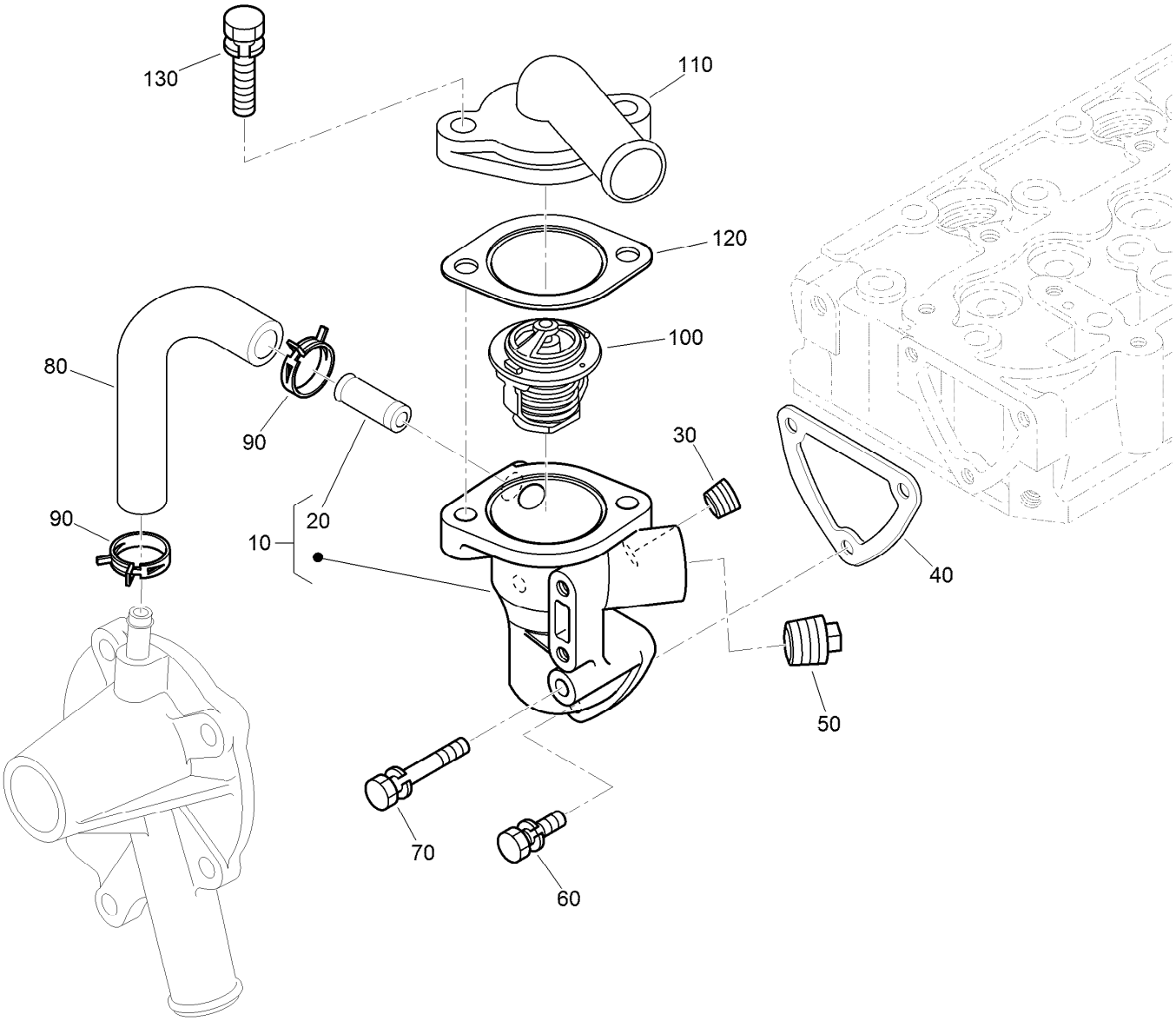


# Water Flange and Thermostat Assembly

| Ref. | Part Number | Qty. | Description |
|---|---|---|---|
| 10 | 110-3819 | 1 | Water Flange ASM |
| 20 | 98-9580 | 1 | Pipe-Return, Water |
| 30 | 98-9444 | 1 | Plug |
| 40 | 110-3820 | 1 | Gasket-Flange, Water |
| 50 | 110-3821 | 1 | Plug |
| 60 | 98-7692 | 2 | Bolt |
| 70 | 125-9063 | 1 | Bolt-Sems |
| 80 | 110-3822 | 1 | Pipe-Return, Water |
| 90 | 125-9078 | 2 | Clamp-Hose |
| 100 | 98-7778 | 1 | Thermostat ASM |
| 110 | 110-3823 | 1 | Cover-Thermostat |
| 120 | 105-3748 | 1 | Gasket-Thermostat |
| 130 | 98-7777 | 2 | Bolt |

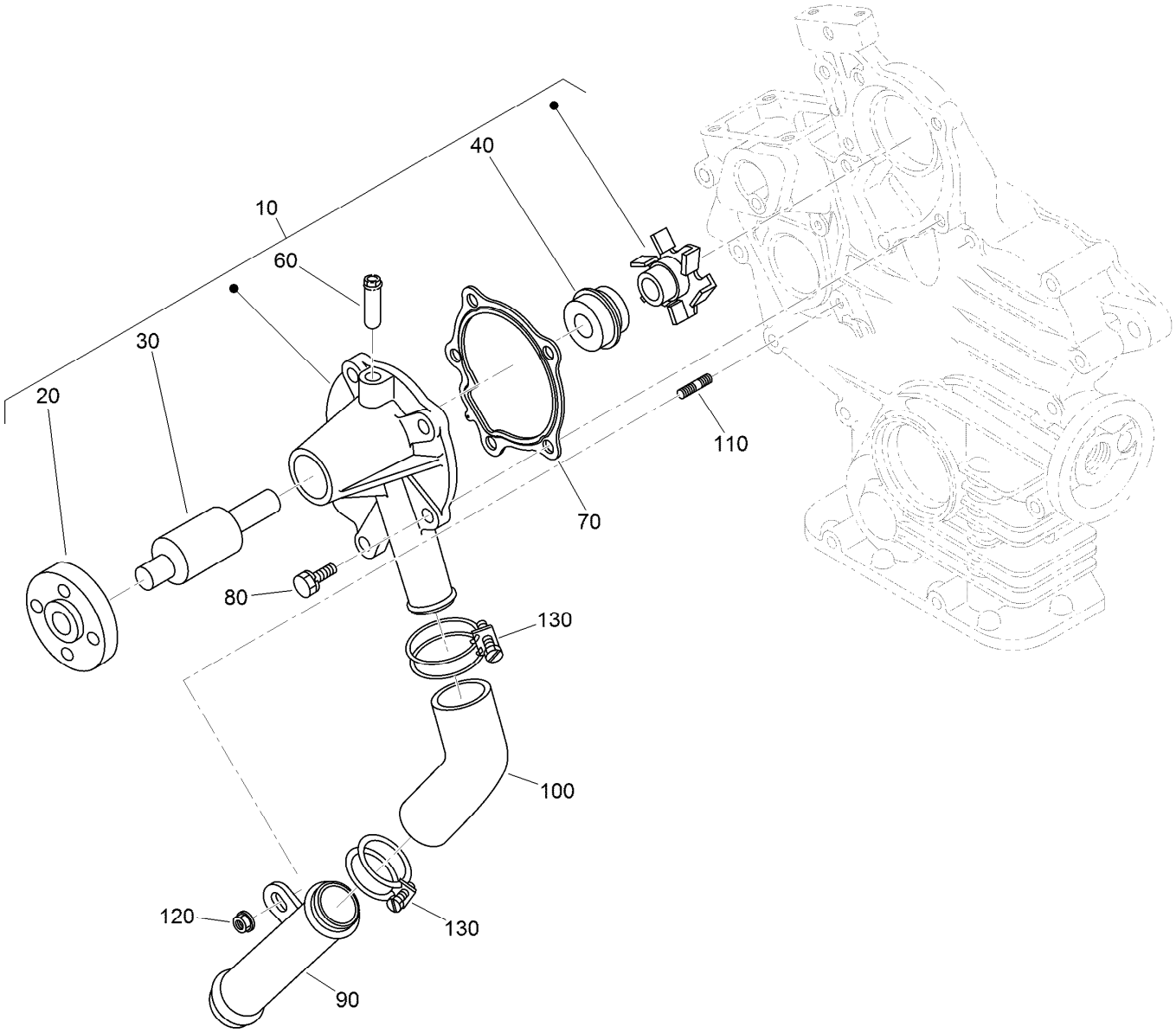


# Water Pump and Water Pipe Assembly

| Ref. | Part Number | Qty. | Description |
|---|---|---|---|
| 10 | 110-3824 | 1 | Water Pump ASM |
| 20 | 125-9081 | 1 | Flange-Pump, Water |
| 30 | 100-1934 | 1 | Bearing-Ball |
| 40 | 99-3518 | 1 | Water Pump Seal ASM |
| 60 | 100-1932 | 1 | Pipe-Return, Water |
| 70 | 117-0330 | 1 | Gasket-Pump, Water |
| 80 | 100-1750 | 4 | Bolt |
| 90 | 100-1918 | 1 | Pipe-Water |
| 100 | 110-3827 | 1 | Pipe-Water |
| 110 | 100-1924 | 1 | Stud |
| 120 | 100-2203 | 1 | Nut-Flange |
| 130 | 110-3828 | 2 | Band-Pipe |

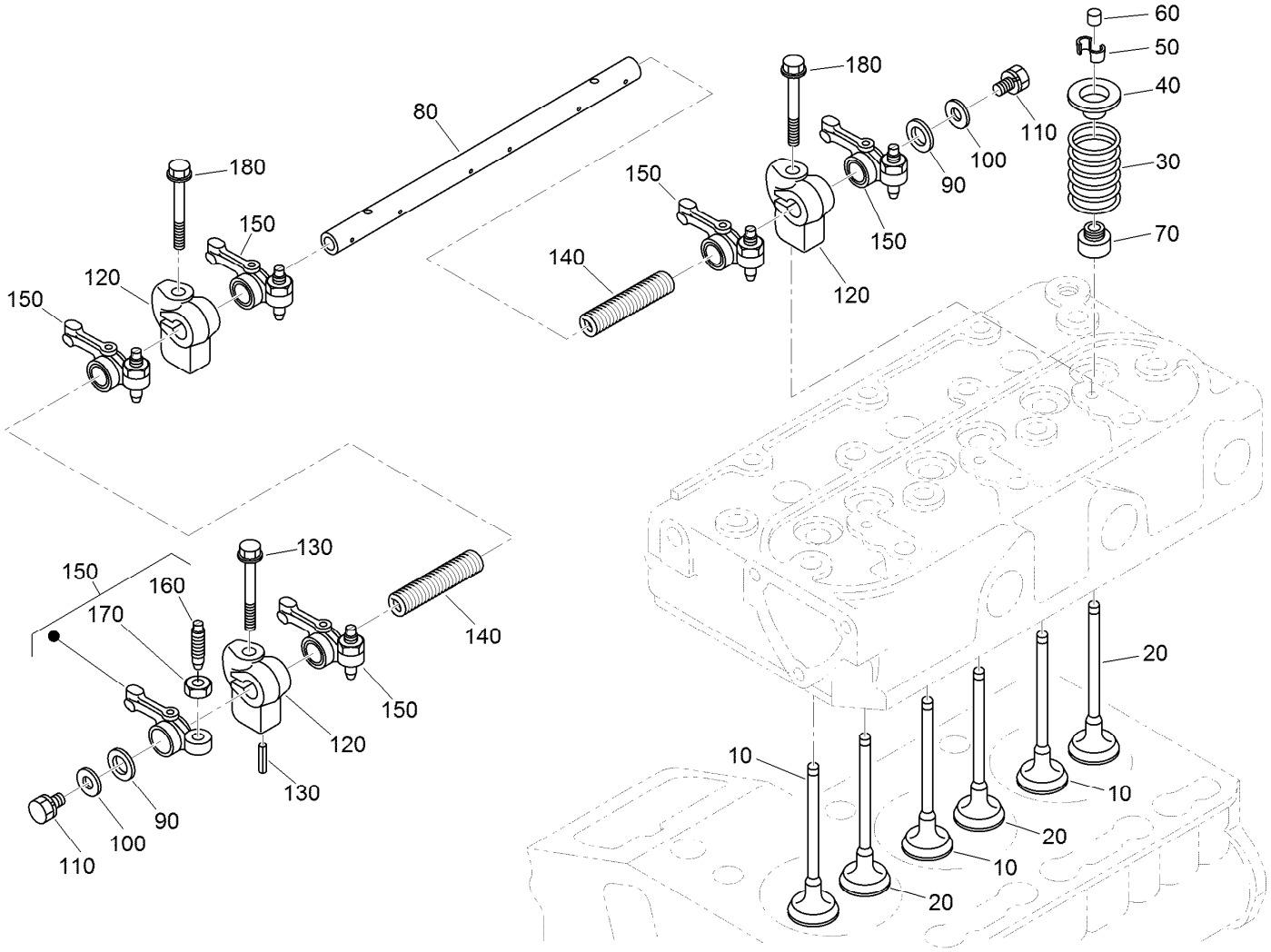


# Valve and Rocker Arm Assembly

| Ref. | Part Number | Qty. | Description |
|---|---|---|---|
| 10 | 112-2514 | 3 | Valve-Inlet |
| 20 | 112-2515 | 3 | Valve-Exhaust |
| 30 | 100-1823 | 6 | Spring-Valve |
| 40 | 100-1825 | 6 | Retainer-Spring, Valve |
| 50 | 120-3136 | 6 | Collet-Spring, Valve |
| 60 | 100-2155 | 6 | Cap-Valve |
| 70 | 100-1797 | 6 | Seal-Stem, Valve |
| 80 | 112-8341 | 1 | Shaft-Arm, Rocker |
| 90 | 100-2044 | 2 | Washer |

| Ref. | Part Number | Qty. | Description |
|---|---|---|---|
| 100 | 110-3832 | 2 | Washer-Plain |
| 110 | 100-1762 | 2 | Bolt |
| 120 | 110-3833 | 3 | Bracket-Arm, Rocker |
| 130 | 98-7602 | 1 | Pin-Spring |
| 140 | 112-8342 | 2 | Spring |
| 150 | 100-1884 | 6 | Rocker Arm ASM |
| 160 | 100-1885 | 6 | Screw-Adjusting |
| 170 | 100-1827 | 6 | Nut |
| 180 | 110-3834 | 3 | Bolt-Flange |

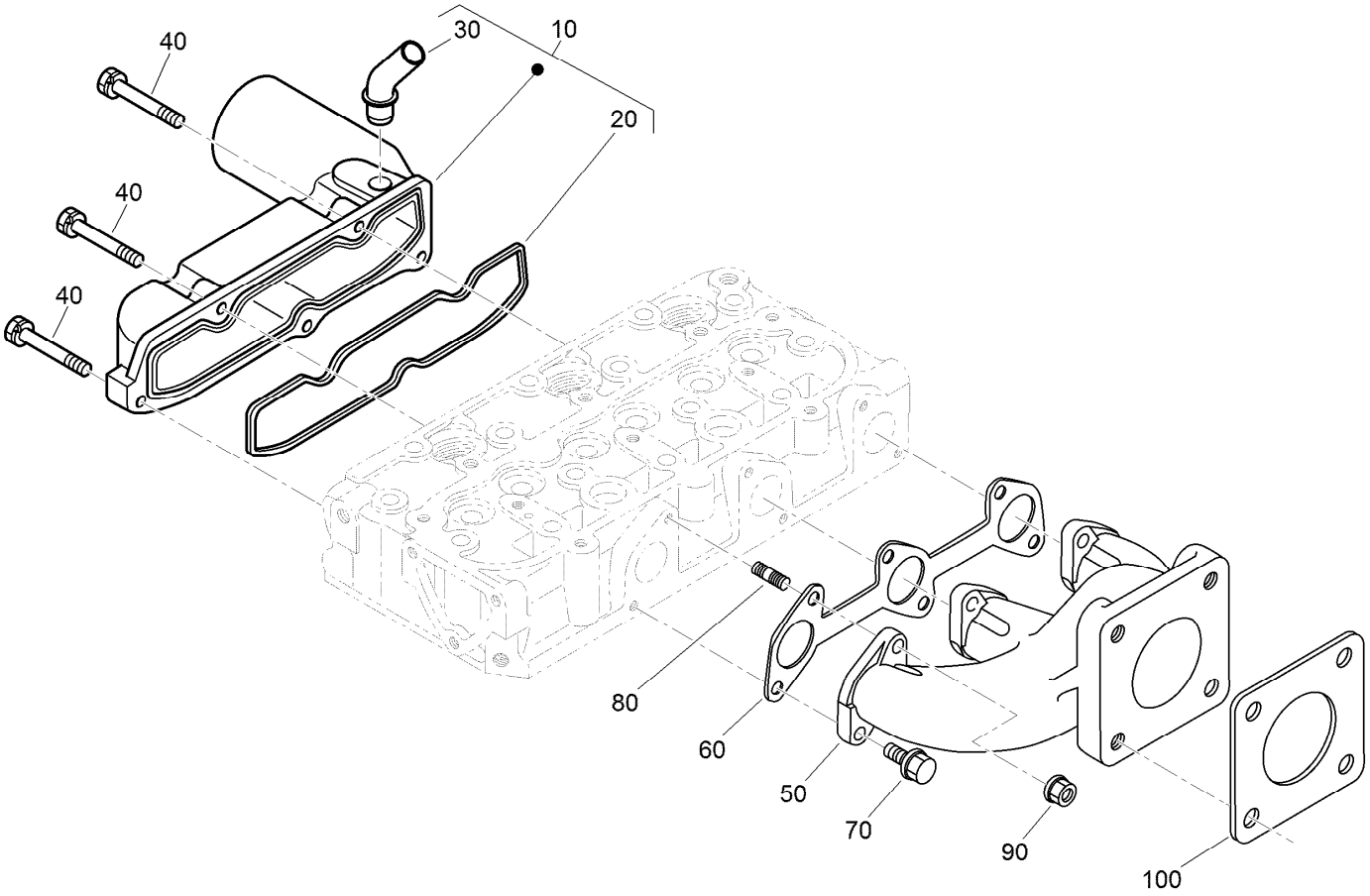


# Inlet and Exhaust Manifold Assembly

| *Ref.* | *Part Number* | *Qty.* | *Description* |
|---|---|---|---|
| 10 | 120-3141 | 1 | Intake Manifold ASM |
| 20 | 110-3838 | 1 | Gasket-Manifold, Intake |
| 30 | 121-2417 | 1 | Pipe-Breather |
| 40 | 98-9352 | 5 | Bolt |
| 50 | 110-3839 | 1 | Manifold-Exhaust |
| 60 | 110-3840 | 1 | Gasket-Manifold, Exhaust |
| 70 | 130-1154 | 3 | Screw-Hex HD |
| 80 | 130-1156 | 3 | Bolt-Stud |
| 90 | 100-1778 | 3 | Nut |
| 100 | 99-8343 | 1 | Gasket-Muffler |

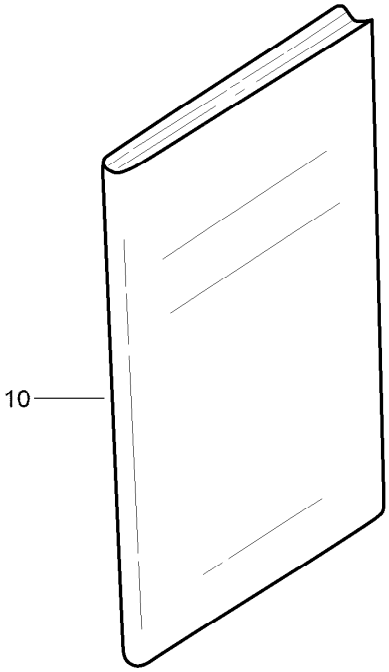


# Miscellaneous Engine Parts

| *Ref.* | *Part Number* | *Qty.* | *Description* |
|---|---|---|---|
| 10 | 130-1513 | 1 | Manual-Operator |

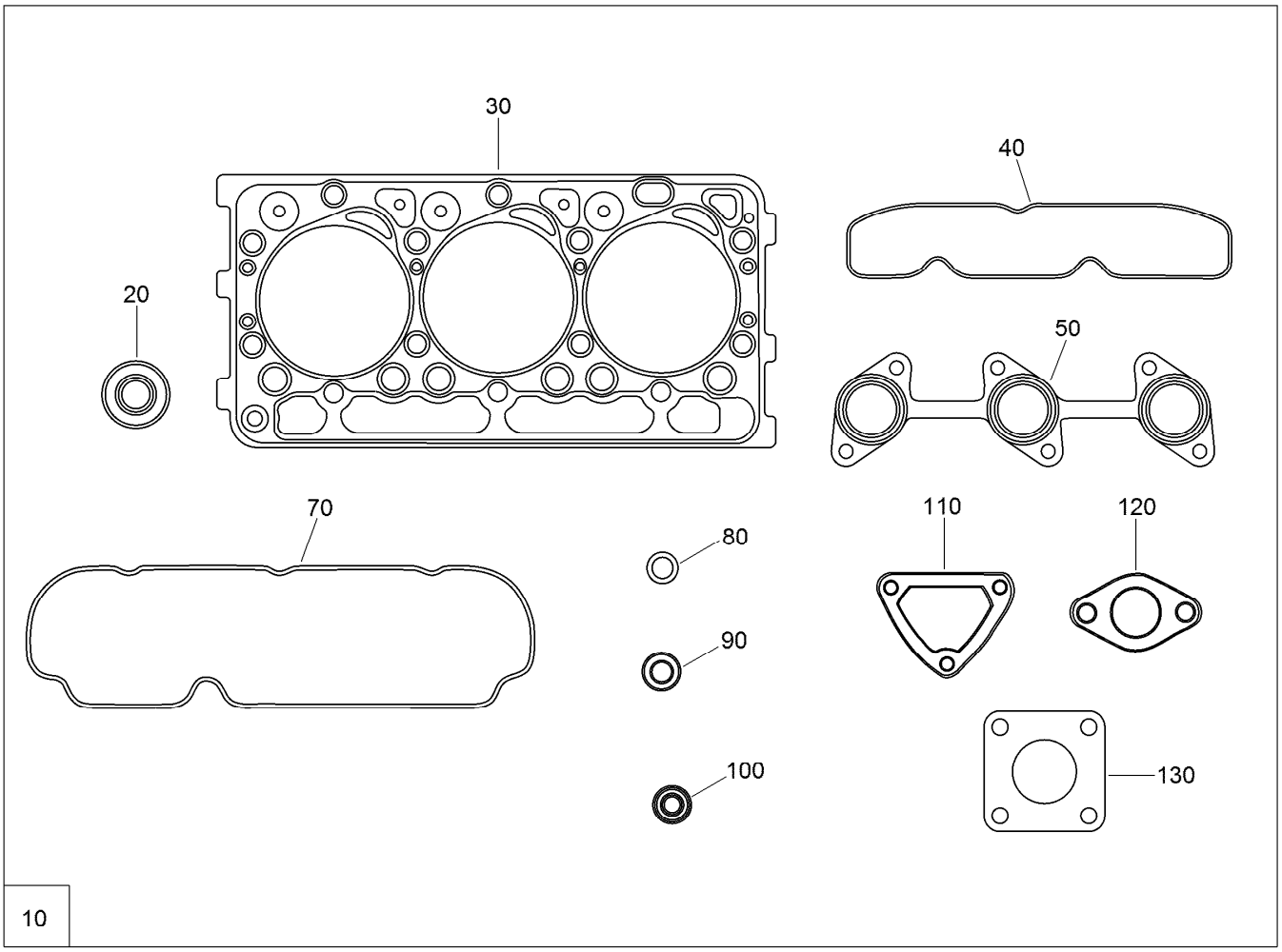


# Upper Engine Gasket Kit

| *Ref.* | *Part Number* | *Qty.* | *Description* |
|---|---|---|---|
| 10 | 112-2518 | 1 | Upper Gasket Kit |
| 20 | 100-1797 | 6 | Seal-Stem, Valve |
| 30 | 112-2520 | 1 | Gasket-Head, Cylinder |
| 40 | 110-3838 | 1 | Gasket-Manifold, Intake |
| 50 | 110-3840 | 1 | Gasket-Manifold, Exhaust |
| 70 | 112-2521 | 1 | Gasket-Cover, Head |
| 80 | 99-3446 | 1 | O-Ring |
| 90 | 98-7676 | 3 | Gasket |
| 100 | 98-7677 | 3 | Seal-Heat |
| 110 | 110-3820 | 1 | Gasket-Flange, Water |
| 120 | 105-3748 | 1 | Gasket-Thermostat |
| 130 | 99-8343 | 1 | Gasket-Muffler |

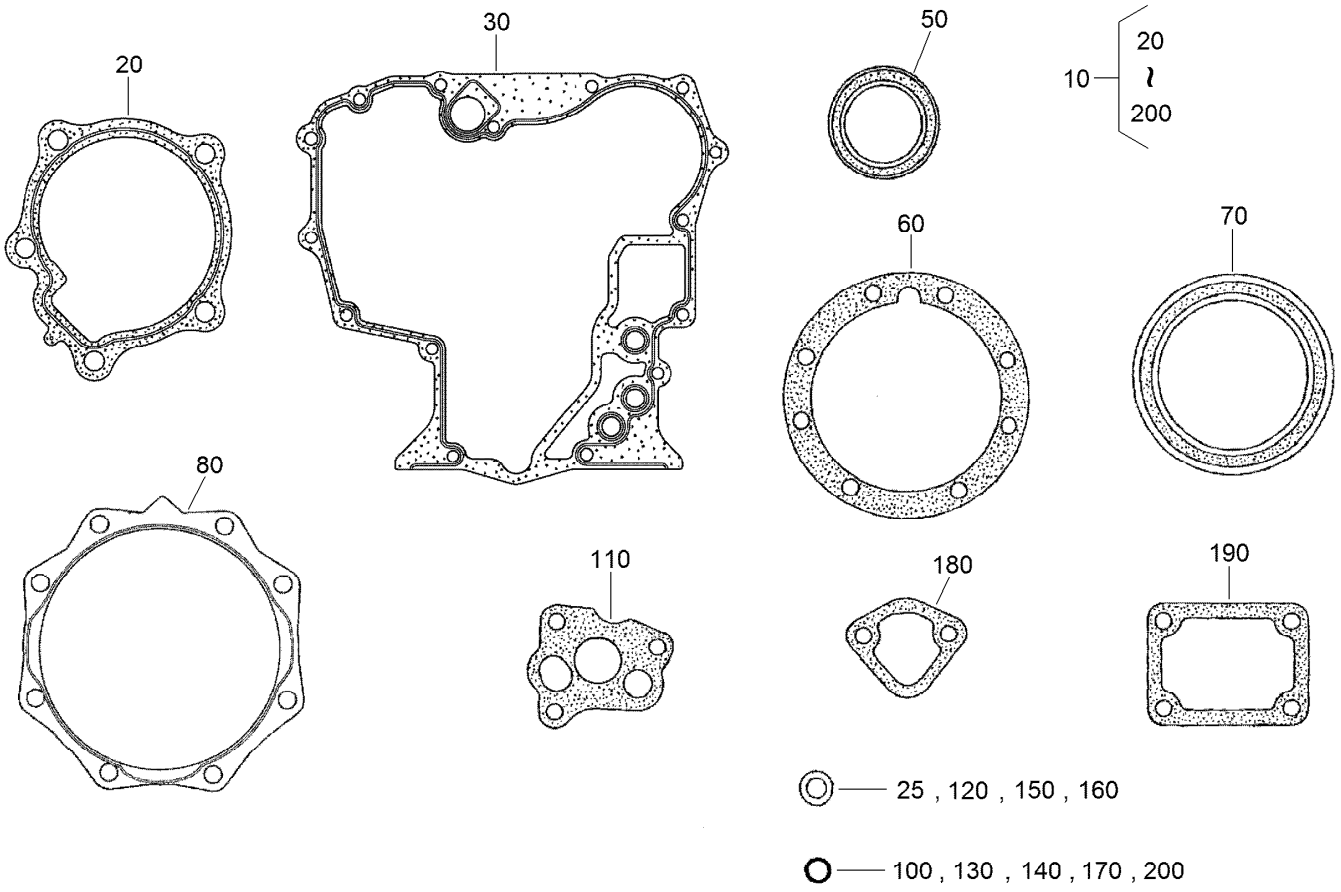


# Lower Engine Gasket Kit

| Ref. | Part Number | Qty. | Description |
|---|---|---|---|
| 10 | 117-0331 | 1 | Lower Gasket Kit |
| 20 | 117-0330 | 1 | Gasket-Pump, Water |
| 25 | 98-7524 | 1 | Gasket |
| 30 | 117-0327 | 1 | Gasket-Case, Gear |
| 50 | 120-7852 | 1 | Seal-Oil |
| 60 | 100-1873 | 1 | Gasket-Case, Bearing |
| 70 | 110-3724 | 1 | Seal-Oil |
| 80 | 100-1876 | 1 | Gasket-Cover, Case |
| 100 | 100-2209 | 1 | O-Ring |
| 110 | 100-2003 | 1 | Gasket-Pump, Oil |

| Ref. | Part Number | Qty. | Description |
|---|---|---|---|
| 120 | 98-7654 | 1 | Gasket |
| 130 | 105-3776 | 1 | O-Ring |
| 140 | 100-2207 | 1 | O-Ring |
| 150 | 98-7654 | 2 | Gasket |
| 160 | 110-9715 | 1 | Gasket-PAN, Oil |
| 170 | 100-2208 | 1 | O-Ring |
| 180 | 98-9636 | 1 | Gasket-Pump, Fuel |
| 190 | 100-1962 | 1 | Gasket-Plate, Control |
| 200 | 110-3762 | 1 | O-Ring |

# Attachments and Accessories

## For 74265TE Z Master Professional 7000 Series Riding Mower With 152cm TURBO FORCE Side Discharge Mower

| Product Name | Model/Part |
|---|---|
| Blade-Atomic, 20.5in | 105-8777-03 |
| Blade-Recycler, 20.5in | 105-7777-03 |
| Blade-Lo Flow, 20.5in | 105-7716-03 |
| Blade-Mid Flow, 20.5in | 105-7715-03 |
| Blade-Hi Flow, 20.5in | 105-7718-03 |
| 6 Pack-Blade, 20.5in Atomic | 108-1115 |
| 6 Pack-Blade, 20.5in Recycler | 110-0405 |
| Bimini Folding Shade Assembly | 115-4510 |
| 6 Pack-Blade, 20.5in Lo Flow | 108-1128 |
| 6 Pack Blade, 20.5in Mid-Flow | 108-1123 |
| Seat Cover W/arm rest | 117-0095 |
| 6 Pack Blade, 20.5in Hi-Flow | 108-1114 |
| Roller Striping Kit | 108-2162 |
| Recycler Kit | 107-1611 |
| Turbo Baffle Kit | 107-1634 |
| Striping Kit | 107-1630 |
| Light Kit | 107-9880 |
| Hitch Kit | 99-8925 |
| Chute Gate Kit | 78521 |
| Hypr-Oil 500 (quart) | 114-4713 |
| Hypr-Oil 500 (gallon) | 114-4714 |
| Hypr-Oil 500-5 (5 gallon) | 114-4715 |
| 1.25in Spark Arrester Kit | 105-1672 |
| Filter Minder Gauge | 99-4664 |

TORO®

Count on it.