Form No. 3410-575 Rev A

Deluxe Seat Kit

CT Series Turf Mower or Groundsmaster® 3400 Traction Unit

Model No. 02909—Serial No. 400000000 and Up

Installation Instructions

⚠ WARNING

CALIFORNIA
Proposition 65 Warning

This product contains a chemical or chemicals known to the State of California to cause cancer, birth defects, or reproductive harm.

Installation

Preparing to Install the Seat Kit

Preparing the Machine

1. Park the machine on a level surface.
2. Shut off the mower cutting units.
3. Raise the cutting units.
4. Latch the cutting units, if applicable.
5. Engage the parking brake, shut off the engine, and wait for all moving parts to stop.
6. Remove the key from the key switch.

Raising the Operator's Platform

Move the platform latch handle to the unlock position and tilt the operator's platform forward as shown in Figure 1.

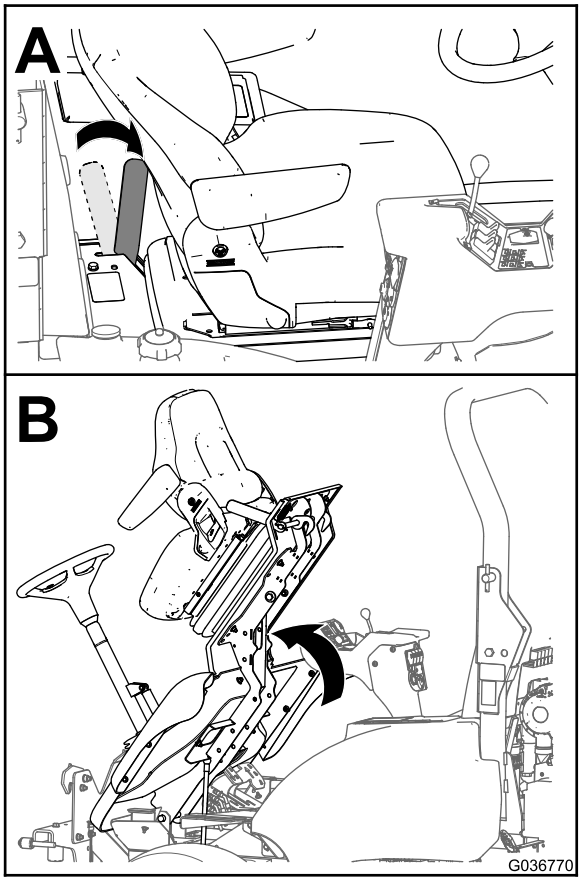

g036770

Figure 1

Disconnecting the Battery

1. Lift the cover of the of the negative-battery cable (Figure 2).

   Note: Lifting the cover will loosen the battery cable terminal from the negative-battery post.

© 2016—The Toro® Company
8111 Lyndale Avenue South
Bloomington, MN 55420

Register at www.Toro.com.

CE

Original Instructions (EN)
Printed in the USA
All Rights Reserved

3410-575 A

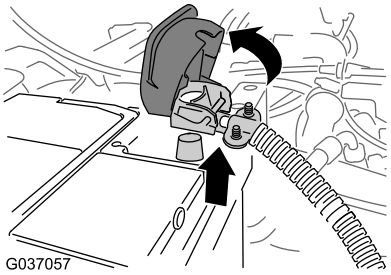

g037057

Figure 2

2. Remove the negative battery cable from the battery (Figure 2).

   Note: Position the negative-battery cable where it cannot contact the negative-battery post.

Removing the Storage Compartment

1. Open the cover of the storage compartment (Figure 3).

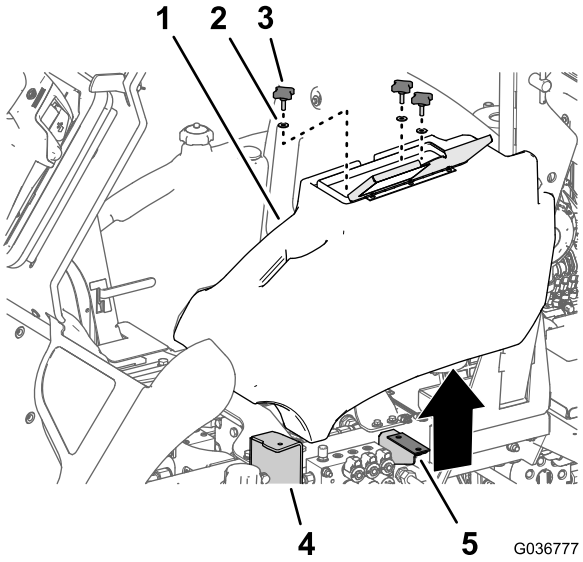

g036777

Figure 3

1. Storage compartment
2. Washer
3. Knob
4. Flange (step)
5. Storage-compartment bracket

2. Loosen and remove the 3 knobs and 3 washers that secure the compartment to the flange of the step and the storage-compartment bracket (Figure 3).
3. Lift the storage compartment from the machine.

Removing the Seat

Seat weight: 39 kg (86 lb)

Note: Have another person help you remove the seat.

1. Disconnect the connector for the seat-switch wire harness from the connector of the machine wire harness (Figure 4)

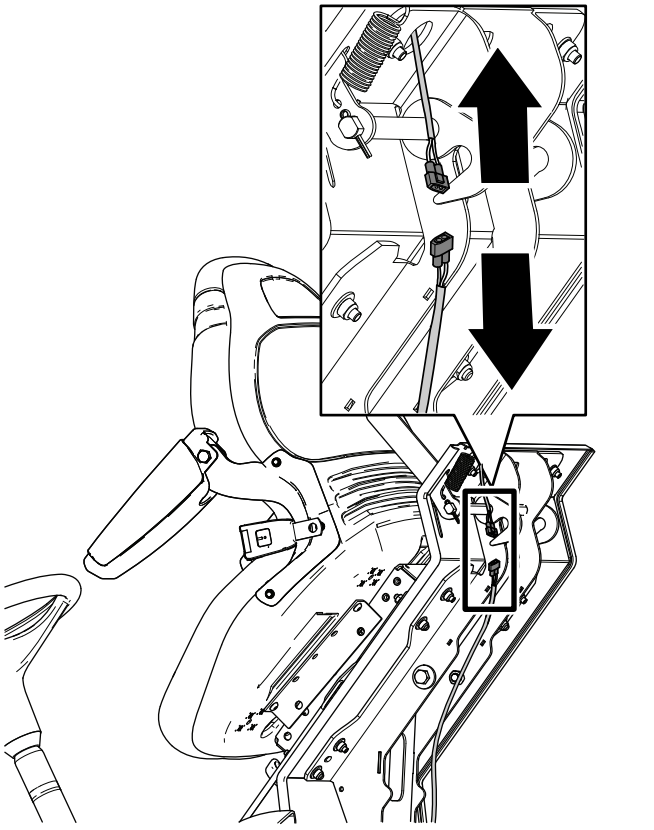

g189929

Figure 4

2. While supporting the seat, remove the 4 washers (8 mm) and 4 locknuts (8 mm) that secure the seat to the seat platform (Figure 5).

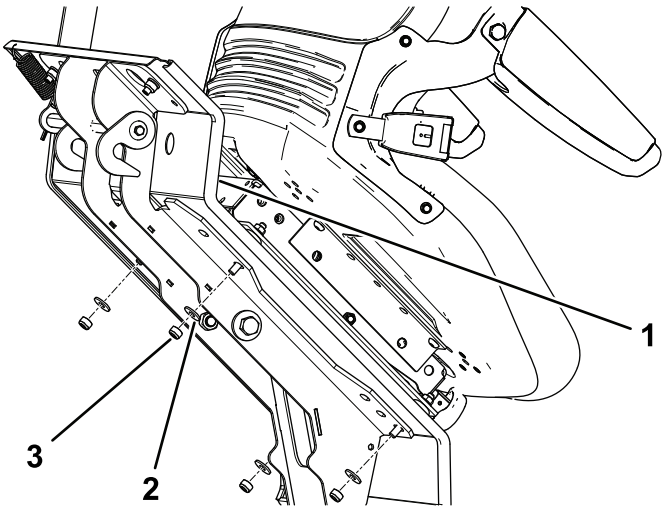

g189930

Figure 5

1. Seat platform
2. Washer (8 mm)
3. Locknut (8 mm)

3. Lower the operator's platform as follows:

   A. Lower the platform carefully; refer to Figure 1 in Raising the Operator's Platform (page 1).

B. Move the locking-latch handle toward the front of the mower as the platform nears the fully lowered position; refer to Figure 1 in Raising the Operator's Platform (page 1).

Note: This ensures that the latch hooks clear the locking bar.

C. Fully lower the platform and move the locking handle toward the rear of the mower until the latch hooks fully engage the locking bar; refer to Figure 1 in Raising the Operator's Platform (page 1).

4. Remove the seat from the platform.

Note: Discard the 4 locknuts (8 mm) and 4 washers (8 mm).

Installing the Seat

Assembling the Seat to the Platform

1. Raise the boot away from the bottom edge of the seat base as follows (Figure 6):

A. At the sides of the seat-base boot, locate the mounting tabs that protrude through the slots in the channel of the seat base.

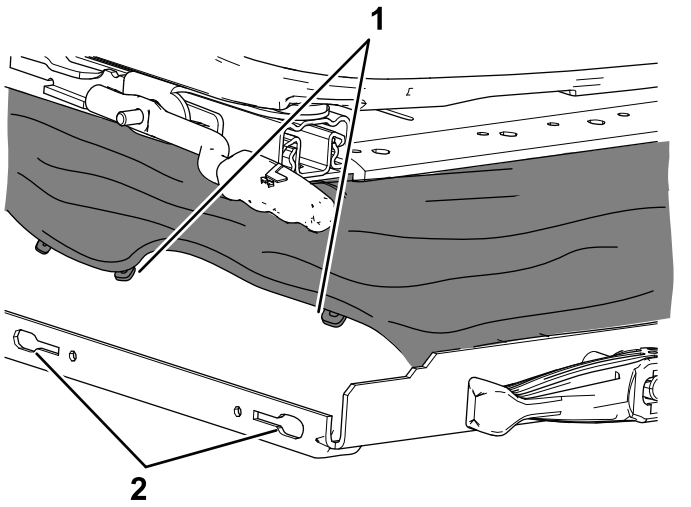

g189940

Figure 6

1. Tabs (seat-base boot)
2. Slots (seat-base channel)

B. Pull each tab along the slot until the tab is over the hole and then pull the tab out and away from the seat-base channel.

Note: Pull the boot forward or rearward depending on which tab you are the removing.

C. When all of the tabs are removed from the slots, pull the rubber boot up (A of Figure 7).

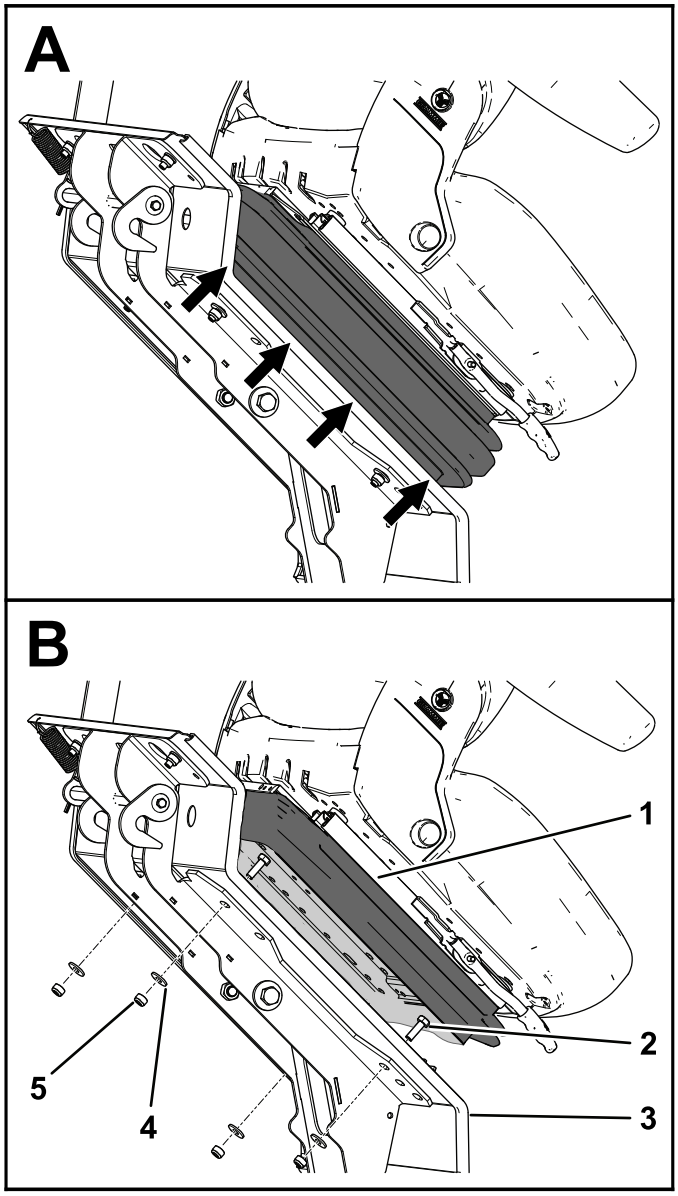

g189933

Figure 7

1. Boot
2. Bolt (8 x 25 mm)
3. Seat platform
4. Washer (8 mm)
5. Locknut (8 mm)

2. At the bottom plate of the new seat, locate the seat-mounting holes for your machine (Figure 8).

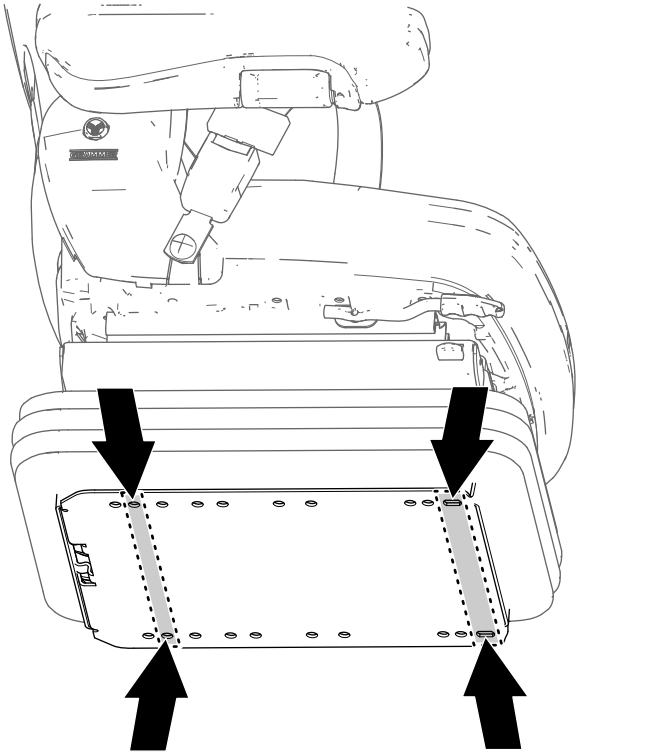

g189932

Figure 8

3. Assemble 4 cap screws (8 x 25 mm), 4 washers (8 x 17 mm) to the holes in the flange of the bottom plate that you identified in step 2.

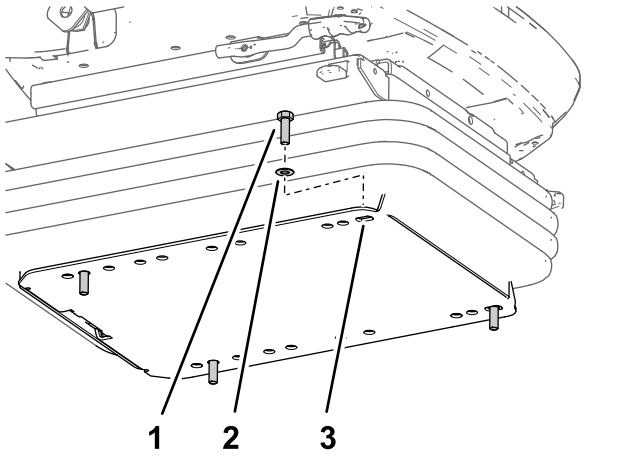

g189931

Figure 9

1. Cap screw (8 x 25 mm)
2. Washer (8 x 17 mm)
3. Flange (seat-bottom plate)

4. Align the 4 cap screws (8 x 25 mm) of the new seat with the holes in the operators platform (Figure 10).

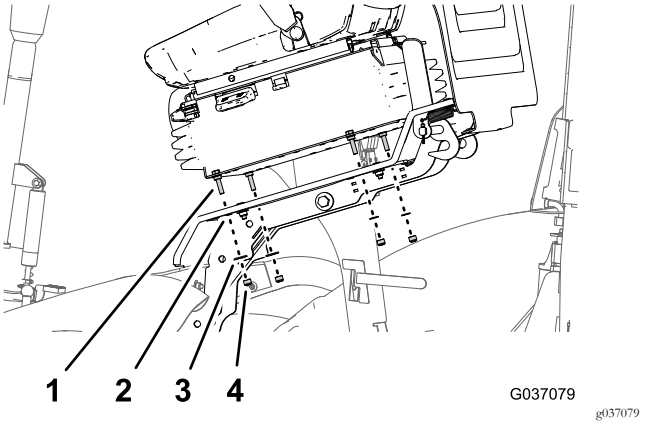

g037079

Figure 10

1. Cap screw (8 x 25 mm)
2. Operator's platform
3. Washer (8 x 17 mm)
4. Locknuts (8 mm)

5. Assemble 2 locknuts (8 mm) and 2 washers (8 x 17 mm) to the cap screws on the left hand side of the seat
6. Partially raise the operator's platform to access the threads of the 2 other cap screws.

   Important: Support the seat to prevent it from falling.
7. Assemble the 2 locknuts (8 mm) and 2 washers (8 x 17 mm) to the other 2 cap screws by hand (Figure 10).
8. Fully raise the platform.
9. Torque the locknuts and cap screws to 27 N·m (20 ft-lb).
10. Connect the seat switch wiring to the machine wiring harness.
11. Install the boot on the seat base.

Completing the Seat Kit Installation

Installing the Storage Compartment

1. Align the 3 holes in the storage compartment with the hole in the flange of the step and the holes in the storage-compartment bracket; refer to Figure 3 in Removing the Storage Compartment (page 2).
2. Assemble the compartment to the step and bracket with the 3 knobs and 3 washers that you removed in step 2 of Removing the Storage Compartment (page 2).

   Note: Ensure that the knobs are sufficiently tightened to secure the compartment to the chassis.

Lowering the Operator's Platform

1. Lower the platform carefully; refer to Figure 1 in Raising the Operator's Platform (page 1).
2. Move the locking-latch handle toward the front of the mower as the platform nears the fully lowered position;

refer to Figure 1 in Raising the Operator's Platform (page 1).

Note: This ensures that the latch hooks clear the locking bar.

3. Fully lower the platform and move the locking handle toward the rear of the mower (Figure 11) until the latch hooks fully engage the locking bar.

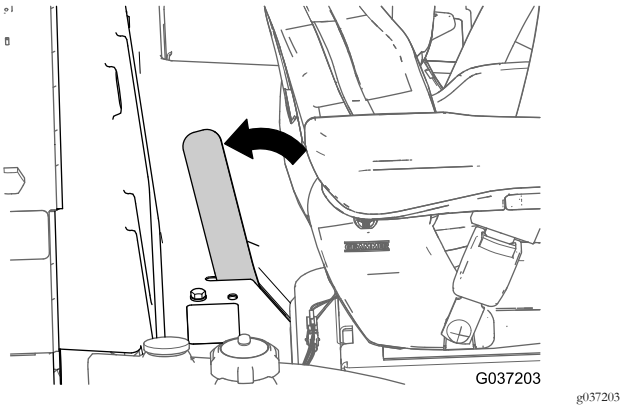

Figure 11

Connecting the Negative Battery Cable

1. Connect the negative battery cable to the battery post; refer to in Figure 2 Disconnecting the Battery (page 1).
2. Align the insulator cover of the battery-cable terminal and close the cover; refer to Figure 2 in Disconnecting the Battery (page 1).

Checking the Operator's Seat Switch

Check that the seat switch in the seat operates correctly; refer to the *Operator's Manual* for your machine.

Product Overview

Controls

Seat Controls

Weight/Height Adjuster

Use the weight/height adjuster to adjust the suspension setting. Fold out the handle, rotate the adjuster clockwise to increase the suspension stiffness and counterclockwise to decrease the stiffness. Fold in the handle when the desired setting is obtained (Figure 12).

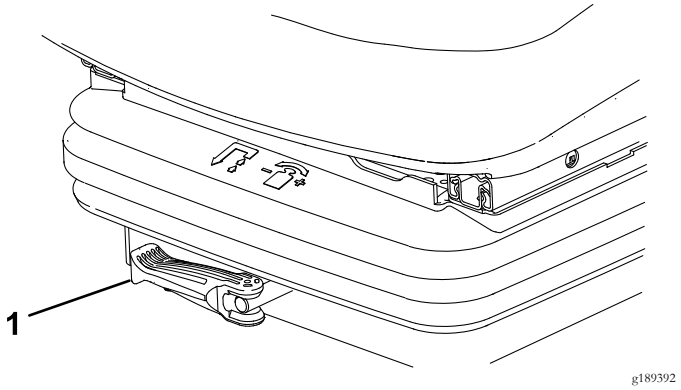

Figure 12

1. Weight/height adjuster

Fore/Aft Locking Lever

Use the for/aft adjustment lever to change the forward/rearward position of the seat (Figure 13). Lift the locking lever to release the seat, move the seat to a comfortable position, and release the locking lever to secure the position of the seat.

Important: The locking lever must secure the operator's seat at the desired position. The operator's seat must not move forward or rearward when the seat is locked.

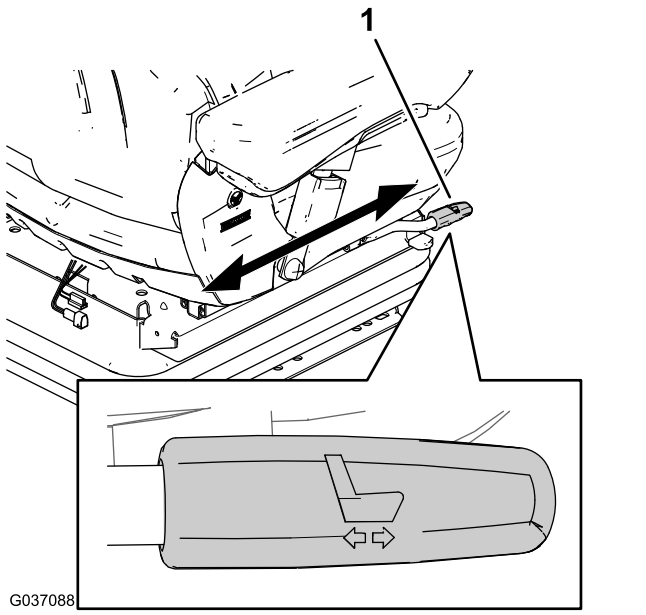

Figure 13

1. Fore/aft-locking lever

Backrest-Tilt Lever

Use the backrest-tilt lever to unlock the backrest when adjusting the recline angle (Figure 14).

Important: The locking lever must latch the backrest into the desired position. When you lock the backrest in position, the backrest should not move to another position.

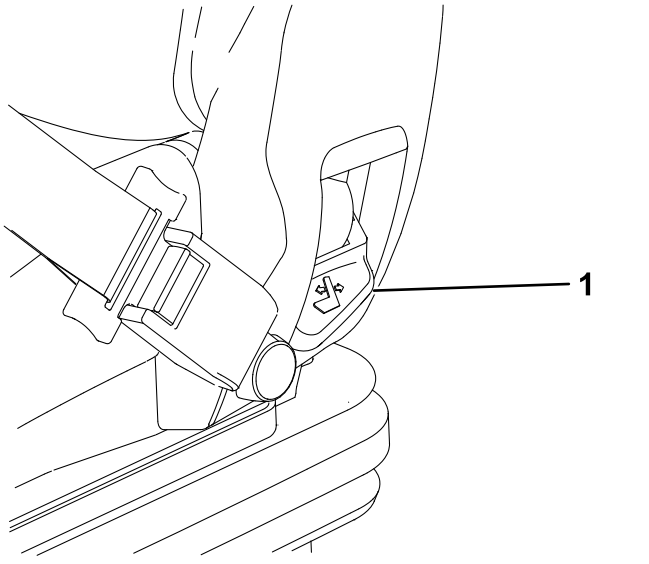

Figure 14

1. Backrest-tilt lever

Maintenance

Greasing the Seat Suspension Mechanism

Service Interval: Yearly

1. Pull back the rubber boot from the channel of the seat base.
2. Apply good quality grease to all pivot points of the suspension mechanism.
3. Install the boot onto the channel of the seat base.

Maintaining the Seat Belt

There are no field-serviceable parts on the seat belt. If it shows signs of wear, damage, or malfunction, replace the seat belt assemble.

Cleaning

Important: Do not clean the seat with a pressure washer.

Note: Keep the surfaces of the operator's seat clean.

⚠ CAUTION

Use caution when cleaning the backrest—unintentionally moving backrest-tilt lever may cause the backrest to rotate forward unexpectedly and cause injury.

When cleaning the backrest cushion, firmly hold the backrest when operating the backrest-tilt lever.

- You do not need to remove the upholstery from the seat frame for cleaning.
- While cleaning the upholstery, do not allow cleaning solution to soak through the upholstery surfaces.
- Use commercially available upholstery or plastic cleaning solution. Before using a new cleaning solution, test it for compatibility with the upholstery at an small concealed area of the seat.

European Privacy Notice

The Information Toro Collects
Toro Warranty Company (Toro) respects your privacy. In order to process your warranty claim and contact you in the event of a product recall, we ask you to share certain personal information with us, either directly or through your local Toro company or dealer.

The Toro warranty system is hosted on servers located within the United States where privacy law may not provide the same protection as applies in your country.

BY SHARING YOUR PERSONAL INFORMATION WITH US, YOU ARE CONSENTING TO THE PROCESSING OF YOUR PERSONAL INFORMATION AS DESCRIBED IN THIS PRIVACY NOTICE.

The Way Toro Uses Information
Toro may use your personal information to process warranty claims, to contact you in the event of a product recall and for any other purpose which we tell you about. Toro may share your information with Toro's affiliates, dealers or other business partners in connection with any of these activities. We will not sell your personal information to any other company. We reserve the right to disclose personal information in order to comply with applicable laws and with requests by the appropriate authorities, to operate our systems properly or for our own protection or that of other users.

Retention of your Personal Information
We will keep your personal information as long as we need it for the purposes for which it was originally collected or for other legitimate purposes (such as regulatory compliance), or as required by applicable law.

Toro's Commitment to Security of Your Personal Information
We take reasonable precautions in order to protect the security of your personal information. We also take steps to maintain the accuracy and current status of personal information.

Access and Correction of your Personal Information
If you would like to review or correct your personal information, please contact us by email at legal@toro.com.

Australian Consumer Law

Australian customers will find details relating to the Australian Consumer Law either inside the box or at your local Toro Dealer.

The Toro Warranty

A Limited Warranty

Conditions and Products Covered

The Toro® Company and its affiliate, Toro Warranty Company, pursuant to an agreement between them, jointly warrant your Toro Commercial product ("Product") to be free from defects in materials or workmanship for two years or 1500 operational hours*, whichever occurs first. This warranty is applicable to all products with the exception of Aerators (refer to separate warranty statements for these products). Where a warrantable condition exists, we will repair the Product at no cost to you including diagnostics, labor, parts, and transportation. This warranty begins on the date the Product is delivered to the original retail purchaser.
* Product equipped with an hour meter.

Instructions for Obtaining Warranty Service

You are responsible for notifying the Commercial Products Distributor or Authorized Commercial Products Dealer from whom you purchased the Product as soon as you believe a warrantable condition exists. If you need help locating a Commercial Products Distributor or Authorized Dealer, or if you have questions regarding your warranty rights or responsibilities, you may contact us at:

Commercial Products Service Department
Toro Warranty Company
8111 Lyndale Avenue South
Bloomington, MN 55420-1196
E-mail: commercial.warranty@toro.com

Owner Responsibilities

As the Product owner, you are responsible for required maintenance and adjustments stated in your Operator's Manual. Failure to perform required maintenance and adjustments can be grounds for disallowing a warranty claim.

Items and Conditions Not Covered

Not all product failures or malfunctions that occur during the warranty period are defects in materials or workmanship. This warranty does not cover the following:

- Product failures which result from the use of non-Toro replacement parts, or from installation and use of add-on, or modified non-Toro branded accessories and products. A separate warranty may be provided by the manufacturer of these items.
- Product failures which result from failure to perform recommended maintenance and/or adjustments. Failure to properly maintain your Toro product per the Recommended Maintenance listed in the *Operator's Manual* can result in claims for warranty being denied.
- Product failures which result from operating the Product in an abusive, negligent or reckless manner.
- Parts subject to consumption through use unless found to be defective. Examples of parts which are consumed, or used up, during normal Product operation include, but are not limited to, brakes pads and linings, clutch linings, blades, reels, bed knives, tines, spark plugs, castor wheels, tires, filters, belts, and certain sprayer components such as diaphragms, nozzles, and check valves, etc.
- Failures caused by outside influence. Items considered to be outside influence include, but are not limited to, weather, storage practices, contamination, use of unapproved coolants, lubricants, additives, fertilizers, water, or chemicals, etc.
- Normal noise, vibration, wear and tear, and deterioration.
- Normal "wear and tear" includes, but is not limited to, damage to seats due to wear or abrasion, worn painted surfaces, scratched decals or windows, etc.

Parts

Parts scheduled for replacement as required maintenance are warranted for the period of time up to the scheduled replacement time for that part. Parts replaced under this warranty are covered for the duration of the original product warranty and become the property of Toro. Toro will make the final decision whether to repair any existing part or assembly or replace it. Toro may use remanufactured parts for warranty repairs.

Note Regarding Deep Cycle Battery Warranty:

Deep cycle batteries have a specified total number of kilowatt-hours they can deliver during their lifetime. Operating, recharging, and maintenance techniques can extend or reduce total battery life. As the batteries in this product are consumed, the amount of useful work between charging intervals will slowly decrease until the battery is completely worn out. Replacement of worn out batteries, due to normal consumption, is the responsibility of the product owner. Battery replacement may be required during the normal product warranty period at owner's expense.

Maintenance is at Owner's Expense

Engine tune-up, lubrication cleaning and polishing, replacement of Items and Conditions Not Covered filters, coolant, and completing Recommended Maintenance are some of the normal services Toro products require that are at the owner's expense.

General Conditions

Repair by an Authorized Toro Distributor or Dealer is your sole remedy under this warranty.

Neither The Toro Company nor Toro Warranty Company is liable for indirect, incidental or consequential damages in connection with the use of the Toro Products covered by this warranty, including any cost or expense of providing substitute equipment or service during reasonable periods of malfunction or non-use pending completion of repairs under this warranty. Except for the Emissions warranty referenced below, if applicable, there is no other express warranty.

All implied warranties of merchantability and fitness for use are limited to the duration of this express warranty. Some states do not allow exclusions of incidental or consequential damages, or limitations on how long an implied warranty lasts, so the above exclusions and limitations may not apply to you.

This warranty gives you specific legal rights, and you may also have other rights which vary from state to state.

Countries Other than the United States or Canada

Customers should contact their Toro Distributor (Dealer) to obtain guarantee policies for your country, province, or state. If for any reason you are dissatisfied with your Distributor's service or have difficulty obtaining guarantee information, contact the Toro importer. If all other remedies fail, you may contact us at Toro Warranty Company.