Form No. 3410-580 Rev A

TORO®

Count on it.

Parts Catalog

Deluxe Seat Kit

CT Series Turf Mower or Groundsmaster® 3400 Traction Unit

Model No. 02909—Serial No. 400000000 and Up

Register at www.Toro.com.
Original Instructions (EN)

CE

3410-580 A

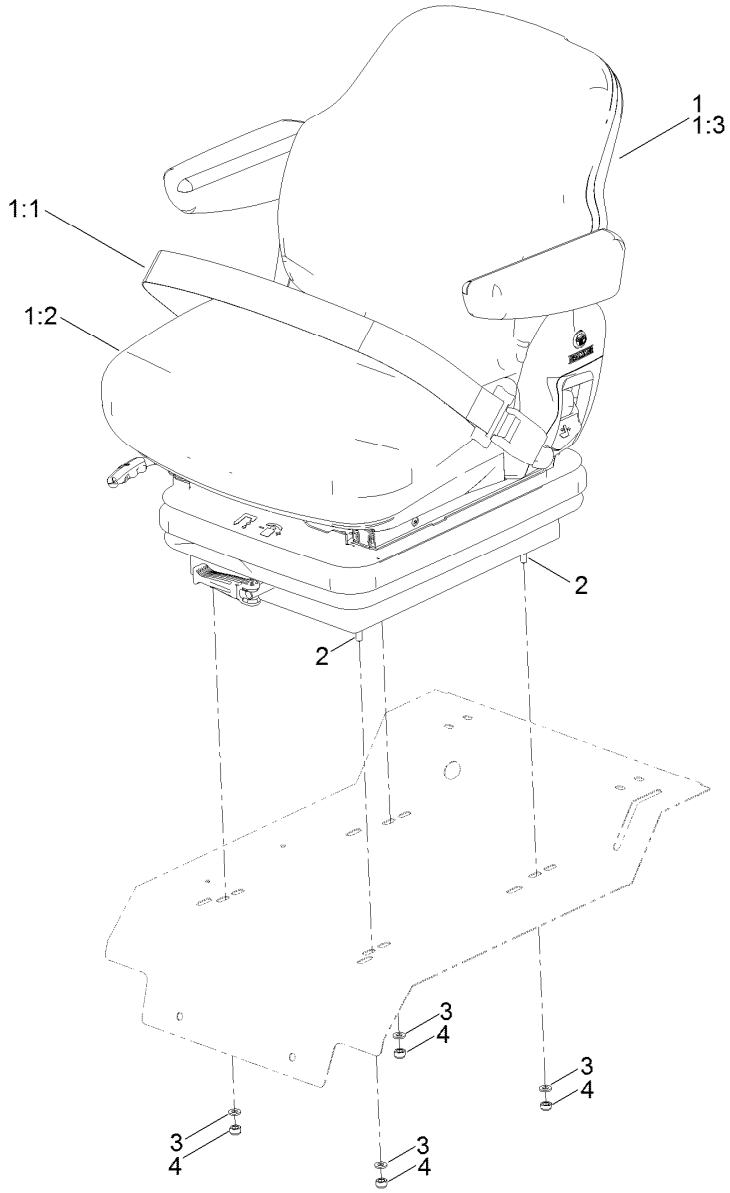

Deluxe Seat Kit Assembly

Ref.	*Part Number*	*Qty.*	*Description*
1	134-0260	1	Seat ASM (Incl. Seat Belt)
1:1	111-4936	1	Retractable Seat Belt ASM
1:2	111-5543	1	Cushion-Seat
1:3	111-5544	1	Cushion-Backrest
1:99	111-5542	1	Seat Switch Kit ●
2	03162	4	Screw-HH
3	ZWP1H000U	8	Washer-Plain
4	09441	4	Nut-Hex, NI

● Not illustrated