Form No. 3404-344 Rev B

TORO®

Count on it.

Parts Catalog

36cm Electric Lawn Mower

Model No. 21136—Serial No. 316000001 and Up

Register at www.Toro.com.
Original Instructions (EN)

CE

3404-344 B

36cm Electric Lawn Mower Assembly

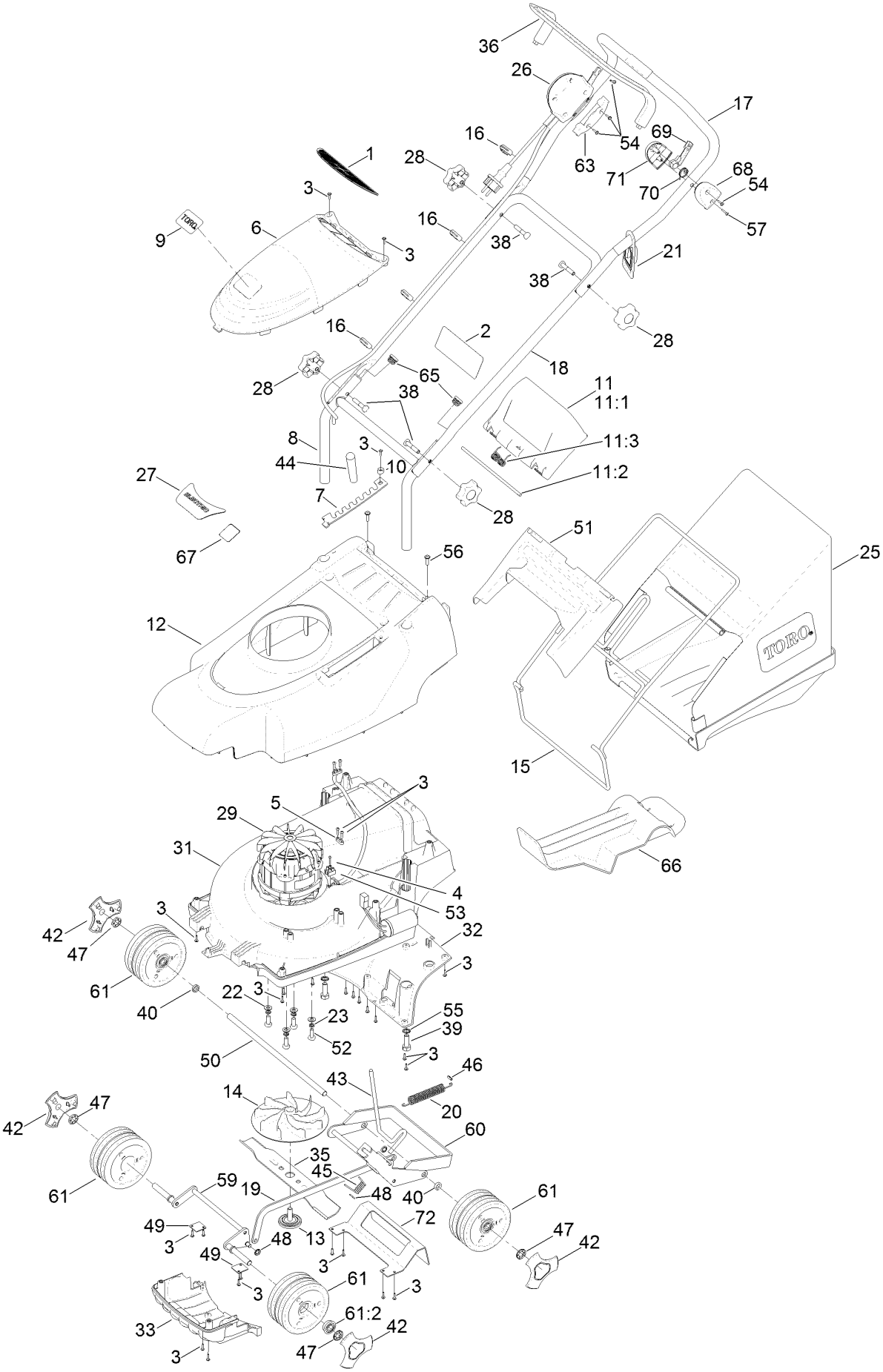

36cm Electric Lawn Mower Assembly (continued)

Ref.	Part Number	Qty.	Description
1	111-8124	1	Moulding-Vent, Support
2	111-5173	1	Decal-Safety, Electric
3	111-0094	33	Screw
4	111-0106	1	Screw
5	111-0117	2	Clamp-Cable
6	111-3932	1	Cover-Motor
7	111-0539	1	Plate-HOC
8	111-0540-03	1	Handlebar-Lower
9	111-4977	1	Decal-Toro
10	111-0543	1	Cover-Screw, HOC
11		1	Rear Flap ASM ●
11:1	111-1042	1	Deflector-Rear
11:2	100126	1	Rod-Deflector
11:3	111-7417	1	Spring-Deflector
12	111-3936	1	Cover-Top
13	100013	1	Bolt-Fixing, Cutterbar (Nylon)
14	100014	1	Carrier-Cutterbar
15	100016-03	1	Frame-Grassbag
16	100023	4	Clip-Cable
17	100024	1	Handlebar-Upper
18	100025-03	1	Handlebar-Middle
19	100037	1	Rod-Connecting
20	100080	1	Spring-Balance, Counter
21	100105	1	Cleat-Cable
22	09475	4	Washer
23	03469	4	Washer-Spring
25	111-4009	1	Grassbag
26	111-4069	1	Switch And Lead ASM
27	111-4081	1	Decal
28	480088	4	Knob-Handlebar
29	111-7714	1	Motor
31	HY100003	1	Underdeck
32	HY100004	1	Throwplate
33	HY100006	1	Fins
35	HY100012	1	Cutterbar
36	HY100017	1	Arm-Bail
38	HY226024	4	Bolt-Handlebar
39	09392	2	Screw-HH
40	HY100030	2	Spacer-Wheel, Rear
42	111-4011	4	Cap-Hub
43	HY100038	1	Lever-HOC
44	480134	1	Knob-HOC
45	HY100041	1	Spring-HOC
46	HY100042	1	Pin-Spring, HOC
47	HY100047	4	Washer-Starlock
48	0201086	3	Washer-Starlock
49	HY100064	2	Plate-Pivot, Axle
50	HY100068	1	Rod-Axle, Rear
51	HY100075	1	Top-Grassbag
52	HY100076	4	Bolt-Motor
53	HY100077	1	Block-Terminal
54	HY100078	5	Screw
55	HY100079	2	Washer
56	09687	2	Screw
57	HY100128	1	Screw-PPH
59	HY100503	1	Front Axle ASM
60	HY100504	1	Rear Axle ASM
61	HY100505	4	Wheel ASM
61:2	HY100033	2	Bearing-Wheel
63	HY100021	1	Switch-Left, Lower
65	300160	2	Plug-Tube
66	111-4377	1	Plug-Mulching
67	320006	1	Decal-HOC
68	100085	1	Mount-Left
69	HY100088	1	Lever-Mount
70	HY100087	1	Spring-Bailarm
71	100086	1	Mount-Right
72	111-4915-03	1	Guard-Plate, Axle

● Not serviced separately



Count on it.