Form No. 3411-163 Rev A

TORO®

Count on it.

Parts Catalog

# Z Master® 8000 Series Riding Mower

## with 42in Cutting Unit

**Model No. 74315—Serial No. 400000000 and Up**

Register at www.Toro.com.
Original Instructions (EN)

*3411-163* A

# Ordering Replacement Parts

To order replacement parts, please supply the part number, the quantity, and the description of each part desired.

### Understanding Reference Numbers

Each identified part in an illustration has a reference number. The reference number for a part also appears in the parts list, along with other information about the part.

This catalog uses two special reference number formats, one to indicate parts in a service assembly and another to indicate the quantity of a given part in an illustration.

### Service Assembly Reference Numbers

Parts in service assemblies have reference numbers in the form a:b. The a represents the reference number of the entire service assembly and the b represents a sequential number unique to each part within the service assembly.

For example, a wheel assembly might be identified by reference number 6, the tire by 6:1, the valve by 6:2, and the wheel by 6:3. When you order the assembly identified by reference number 6, you receive all parts identified by reference numbers 6:1,6:2, and 6:3. However, you may also order any part individually. Reference numbers of this type appear in illustration and in parts lists.

### Reference Numbers Indicating Quantity

In an illustration, if a reference number indicates more than one part, the reference number has the form nX y. The n represents the quantity of the part, the X is the multiplication symbol, and the y represents the reference number.

For example, in an illustration, the reference number 2X 37 means that two of the parts identified by reference number 37 are indicated.

# Contents

Caster Wheel and Frame Assembly . . . . . 4
Frame and Decal Assembly No. 116-7482. . . . . 6
Speed Control Assembly. . . . . 8
Parking Brake Assembly . . . . . 10
Seat and Console Assembly. . . . . 12
Hydraulic Assembly . . . . . 14
Hydraulic Pump Assembly No. 116-7836. . . . . 16
Idler Assembly No. 103-7349. . . . . 18
Blower Mounting Assembly . . . . . 20
Blower Assembly No. 116-9649. . . . . 22
Engine, Muffler and Air Cleaner Assembly . . . . . 24
Fuel Tank Assembly. . . . . 26
Electrical System Assembly . . . . . 28
Hopper Switch Actuator Assembly No. 103-8528. . . . . 30
Hopper Mounting Assembly . . . . . 32
Hopper Frame Assembly No. 109-4086. . . . . 34
Drive Assembly. . . . . 36
Deck Mounting Assembly . . . . . 38
Deck, Gearbox and Driveshaft Mounting Assembly . . . . . 40
Deck Decal Assembly No. 109-4373 . . . . . 42
Discharge Tube Assembly No. 103-9487. . . . . 44
Gearbox Assembly No. 103-3460 . . . . . 46
Rear Deck Height Adjustment Assembly No. 109-0322. . . . . 48
Drive Shaft Assembly No. 103-9485. . . . . 50
Deck Support Frame Assembly No. 130-2892 . . . . . 52
Deck Support W/Decals Assembly No. 103-9481. . . . . 54
Spring Lift Assist Assembly No. 116-7850 . . . . . 56
Attachments and Accessories . . . . . 58

**© 2017—The Toro® Company**
**8111 Lyndale Avenue South**
**Bloomington, MN 55420**



**Contact us at www.Toro.com.**
**Printed in the USA.**
**All Rights Reserved**

# Caster Wheel and Frame Assembly

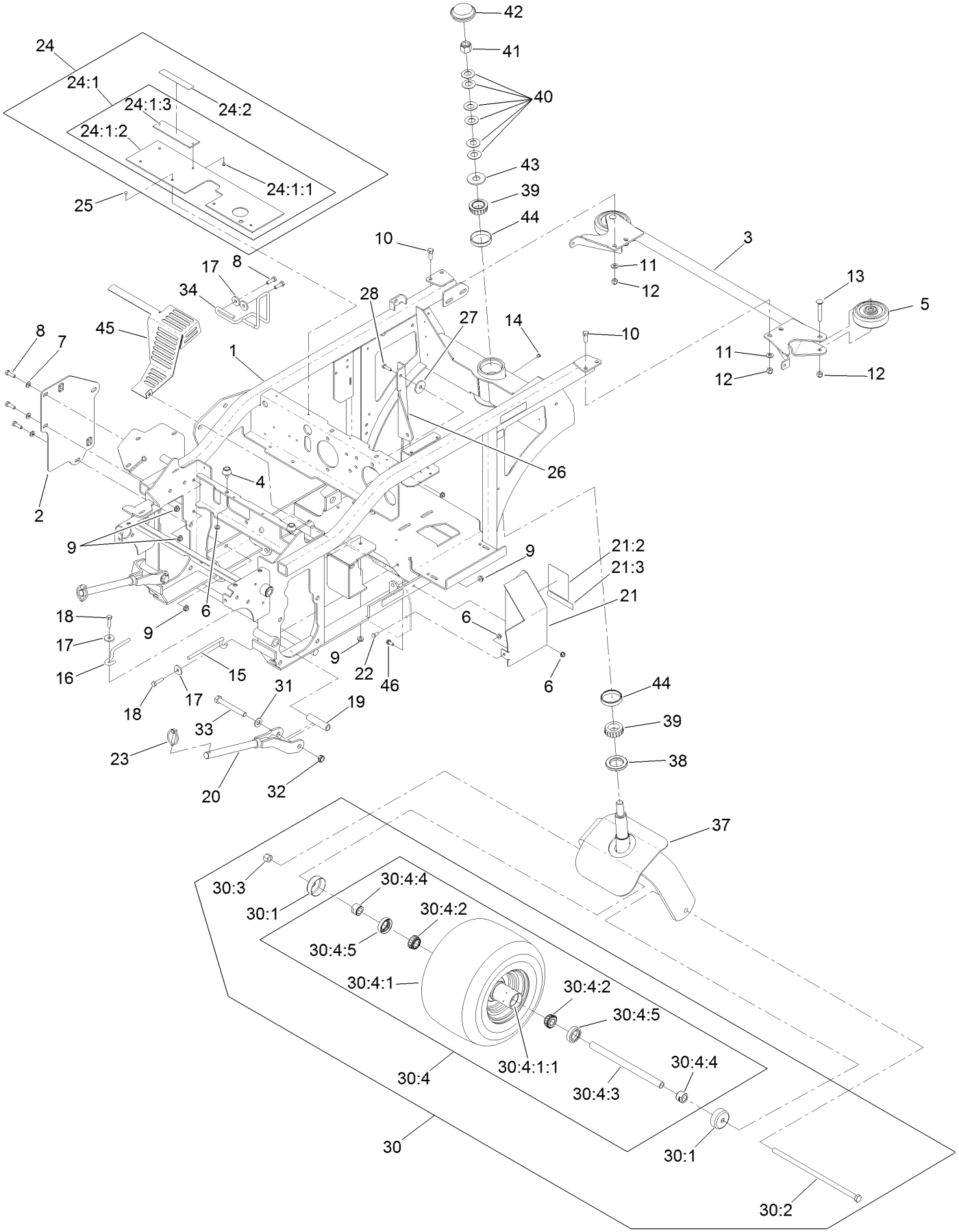

# Caster Wheel and Frame Assembly (continued)

| Ref. | Part Number | Qty. | Description |
|---|---|---|---|
| 1 | 116-7482 | 1 | Frame ASM |
| 2 | 116-7396-03 | 1 | Plate-Support |
| 3 | 109-0925-03 | 1 | Bumper-Rear |
| 4 | 109-2365 | 1 | Bumper-Rubber |
| 5 | 103-5408 | 2 | Roller-Bumper |
| 6 | 32128-33 | 5 | Nut-HF |
| 7 | 3256-23 | 3 | Washer-Flat |
| 8 | 322-5 | 5 | Screw-HH |
| 9 | 32128-20 | 5 | Nut-HF |
| 10 | 323-6 | 4 | Screw-HH |
| 11 | 3256-24 | 4 | Washer-Flat |
| 12 | 3296-39 | 6 | Nut-Lock, NI |
| 13 | 3231-31 | 2 | Screw-CARR |
| 14 | 1-811010 | 1 | Plug |
| 15 | 103-8333 | 1 | Guide-Belt |
| 16 | 103-8349 | 1 | Guide-Belt |
| 17 | 1-613235 | 4 | Washer |
| 18 | 322-6 | 2 | Screw-HH |
| 19 | 1-633060 | 2 | Spacer-Wheel, Short |
| 20 | 103-6596-03 | 2 | Rod-Push |
| 21 | 130-2879 | 1 | Drive Shield ASM |
| 21:2 | 116-8941 | 1 | Decal-Belt Routing |
| 21:3 | 98-1977 | 1 | Decal-Warning |
| 22 | 321-3 | 1 | Screw-HH |
| 23 | 103-4155 | 2 | Pin-Lynch |
| 24 | 103-9476 | 1 | Lift Shield ASM |
| 24:1 | | 1 | Shield-Lift ● |
| 24:1:1 | 1-803035 | 2 | Rivet-Pop |
| 24:1:2 | 103-8819 | 1 | Flap-Guard |
| 24:1:3 | 103-9114-03 | 1 | Plate-Decal |

| Ref. | Part Number | Qty. | Description |
|---|---|---|---|
| 24:2 | 98-1977 | 1 | Decal-Warning |
| 25 | 1-803035 | 4 | Rivet-Pop |
| 26 | 109-5874-03 | 1 | Brace-PTO |
| 27 | 1-213069 | 1 | Washer |
| 28 | 321-6 | 1 | Screw-HH |
| 30 | 130-2865 | 1 | Wheel And Axle ASM |
| 30:1 | 103-2768 | 2 | Guard-Seal |
| 30:2 | 103-7738 | 1 | Screw-HH |
| 30:3 | 3296-23 | 1 | Nut-Lock, NI |
| 30:4 | 130-2864 | 1 | Wheel And Bearing ASM |
| 30:4:1 | | 1 | Wheel And Tire ASM ● |
| 30:4:1:1 | 1-633584 | 2 | Bearing-Cup |
| 30:4:2 | 1-633585 | 2 | Bearing-Cone, Taper |
| 30:4:3 | 126-5362 | 1 | Axle Caster ASM |
| 30:4:4 | 103-3051 | 1 | Spacer-Nut ■ |
| 30:4:5 | 103-0063 | 2 | Seal-Caster |
| 31 | 3256-26 | 2 | Washer-Flat |
| 32 | 3296-45 | 2 | Nut-Lock, NI |
| 33 | 325-17 | 2 | Screw-HH |
| 34 | 116-8323 | 1 | Guide-Belt |
| 37 | 103-3351-03 | 1 | Fork-Rear Caster |
| 38 | 103-9027 | 1 | Seal-Grease |
| 39 | 103-9028 | 2 | Bearing-Roller, Cone Taper |
| 40 | 1-633508 | 6 | Washer-Bellville |
| 41 | 3296-51 | 1 | Nut-Lock, NI |
| 42 | 126-9882 | 1 | Cap-Grease |
| 43 | 3256-8 | 1 | Washer-Flat |
| 44 | 103-9029 | 2 | Cup-Tapered, Roller Bearing |
| 45 | 116-7272-03 | 1 | Shield-Heat |
| 46 | 120-4654 | 1 | Screw-HHF |

● Not serviced separately
■ Use Pro-Lock, Nut Type (P/N 1-840022, .5ml tube) on threads.

# Frame and Decal Assembly No. 116-7482

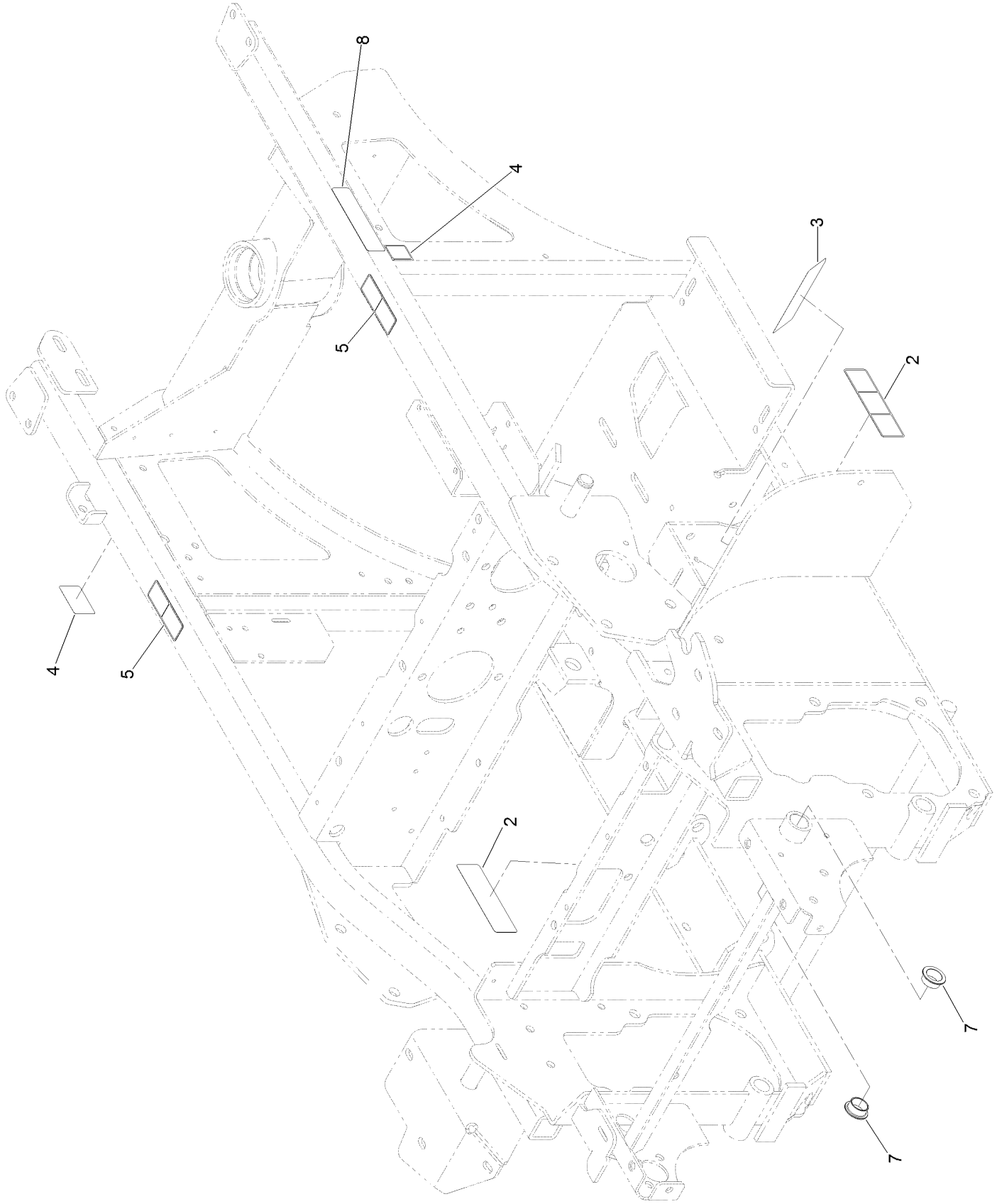

# Frame and Decal Assembly No. 116-7482 (continued)

| Ref. | Part Number | Qty. | Description |
|---|---|---|---|
| 2 | 112-9028 | 2 | Decal-Missing, Cover |
| 3 | 126-4207 | 1 | Decal-Adjustment, Clutch |
| 4 | 106-5517 | 2 | Decal-Warning |
| 5 | 120-0625 | 2 | Decal-Warning, Pinch Point |
| 7 | 108519 | 2 | Bushing-Bronze |
| 8 | 117-2718 | 1 | Decal-Arrester, Spark |

# Speed Control Assembly

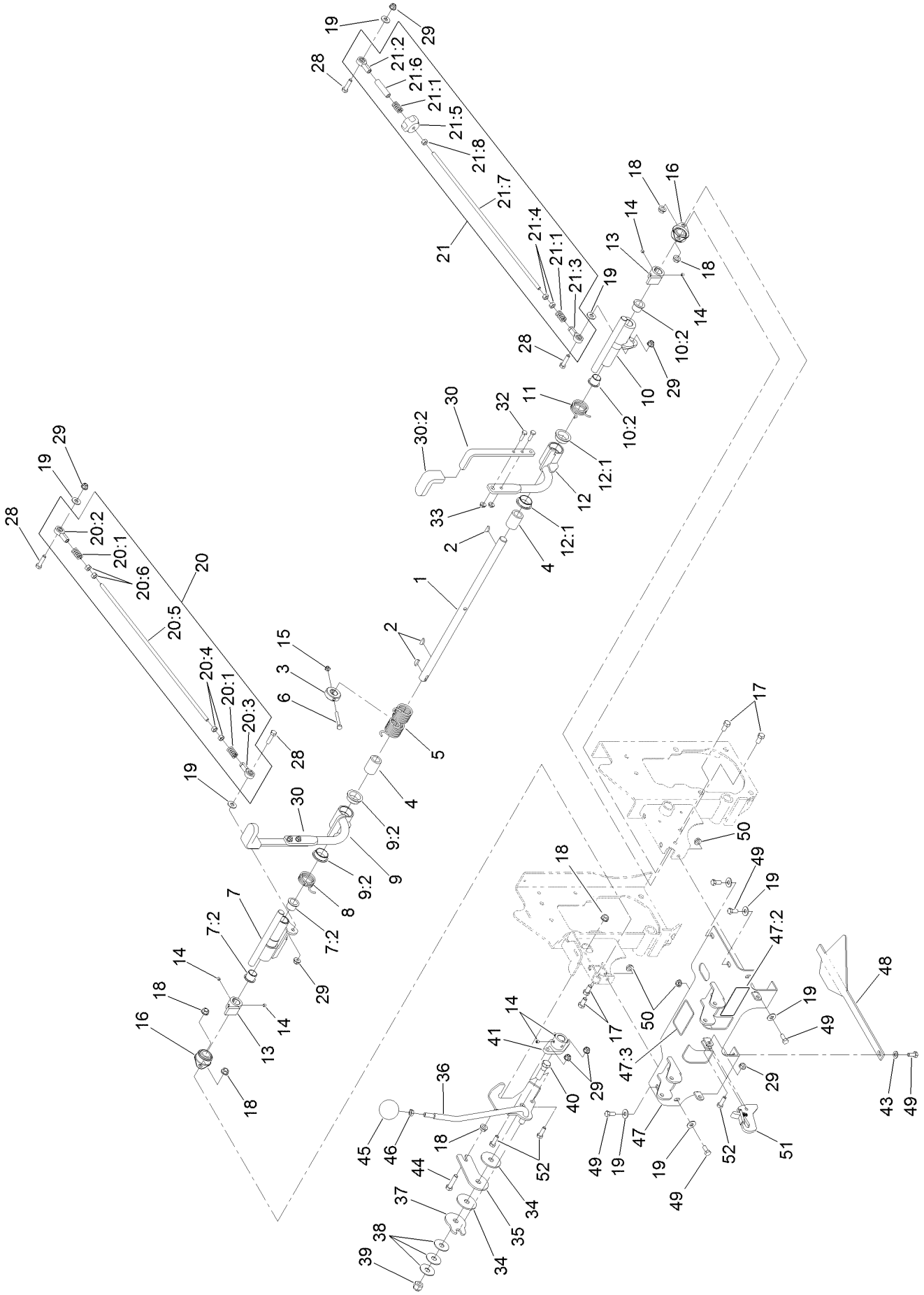

# Speed Control Assembly (continued)

| Ref. | Part Number | Qty. | Description |
|---|---|---|---|
| 1 | 116-7856 | 1 | Shaft-Control, Speed |
| 2 | 3257-5 | 3 | Key-Woodruff |
| 3 | 116-7372 | 1 | Stop-Hub, Center |
| 4 | 116-7414 | 2 | Bushing-Plastic |
| 5 | 116-8475 | 1 | Spring-Torsion, Double |
| 6 | 321-11 | 1 | Screw-HH |
| 7 | 116-8444 | 1 | RH Control Hub ASM |
| 7:2 | 103-4398 | 2 | Bearing-Flange, Iglide |
| 8 | 116-7380 | 1 | Spring-Torsion, RH |
| 9 | 126-7461 | 1 | RH Steering Handle ASM |
| 9:2 | 116-7422 | 2 | Bearing-Flange, Iglide |
| 10 | 116-7416 | 1 | LH Control Hub ASM |
| 10:2 | 103-4398 | 2 | Bearing-Flange, Iglide |
| 11 | 116-7381 | 1 | Spring-Torsion, LH |
| 12 | 126-7463 | 1 | LH Steering Handle ASM |
| 12:1 | 116-7422 | 2 | Bearing-Flange, Iglide |
| 13 | 103-4342 | 2 | Hub-Speed Control |
| 14 | 108-0989 | 6 | Screw-Set |
| 15 | 3296-56 | 1 | Nut-Lock, NI |
| 16 | 1-633102 | 2 | Bearing-Flange, Side |
| 17 | 323-4 | 4 | Screw-HH |
| 18 | 3290-357 | 6 | Nut-HHF, Whiz |
| 19 | 3256-3 | 9 | Washer-Flat |
| 20 | 116-9667 | 1 | RH Pump Linkage ASM |
| 20:1 | 1-323245 | 2 | Spring-Compression |
| 20:2 | 1-543017 | 1 | Balljoint-RH |
| 20:3 | 1-633152 | 1 | Balljoint-LH |
| 20:4 | 1-804524 | 2 | Nut |
| 20:5 | 116-7492 | 1 | Rod-Linkage, Steering |
| 20:6 | 3219-2 | 2 | Nut-Hex |
| 21 | 116-9668 | 1 | LH Pump Linkage ASM |
| 21:1 | 1-323245 | 2 | Spring-Compression |
| 21:2 | 1-543017 | 1 | Balljoint-RH |
| 21:3 | 1-633152 | 1 | Balljoint-LH |
| 21:4 | 1-804524 | 2 | Nut |
| 21:5 | 103-3060 | 1 | Knob-Tracking |
| 21:6 | 103-5945 | 1 | Spacer |
| 21:7 | 116-7492 | 1 | Rod-Linkage, Steering |
| 21:8 | 3219-2 | 1 | Nut-Hex |
| 28 | 322-6 | 4 | Screw-HH |
| 29 | 104-8300 | 7 | Nut-Flange, NI |
| 30 | 116-9246 | 2 | Handle ASM |
| 30:2 | 103-5994 | 1 | Grip-Handle, Steering |
| 32 | 321-5 | 4 | Screw-HH |
| 33 | 32128-33 | 4 | Nut-HF |
| 34 | 103-5009 | 2 | Disc-Friction |
| 35 | 116-7846 | 1 | Plate-Friction, Speed Control |
| 36 | 116-7845 | 1 | Lever-Speed Control |
| 37 | 116-7849 | 1 | Plate-Friction, Speed Control |
| 38 | 103-5018 | 3 | Washer-Disc, Spring |
| 39 | 3296-19 | 1 | Nut-Hex |
| 40 | 116-7848 | 1 | Screw-HH |
| 41 | 116-7859 | 1 | Hub-Control, Speed |
| 43 | 3256-23 | 1 | Washer-Flat |
| 44 | 323-8 | 1 | Screw-HH |
| 45 | 103-4397 | 1 | Knob-Ball, Speed Control |
| 46 | 3218-3 | 1 | Nut-Jam |
| 47 | 116-7384 | 1 | Console ASM |
| 47:2 | 116-9049 | 1 | Decal-Danger, Driveline |
| 47:3 | 116-8946 | 1 | Decal-Motor, Wheel |
| 48 | 103-5993-03 | 1 | Guide-Plenum |
| 49 | 322-3 | 6 | Screw-HH |
| 50 | 32128-20 | 3 | Nut-HF |
| 51 | 103-8494 | 1 | Hook |
| 52 | 322-5 | 3 | Screw-HH |

# Parking Brake Assembly

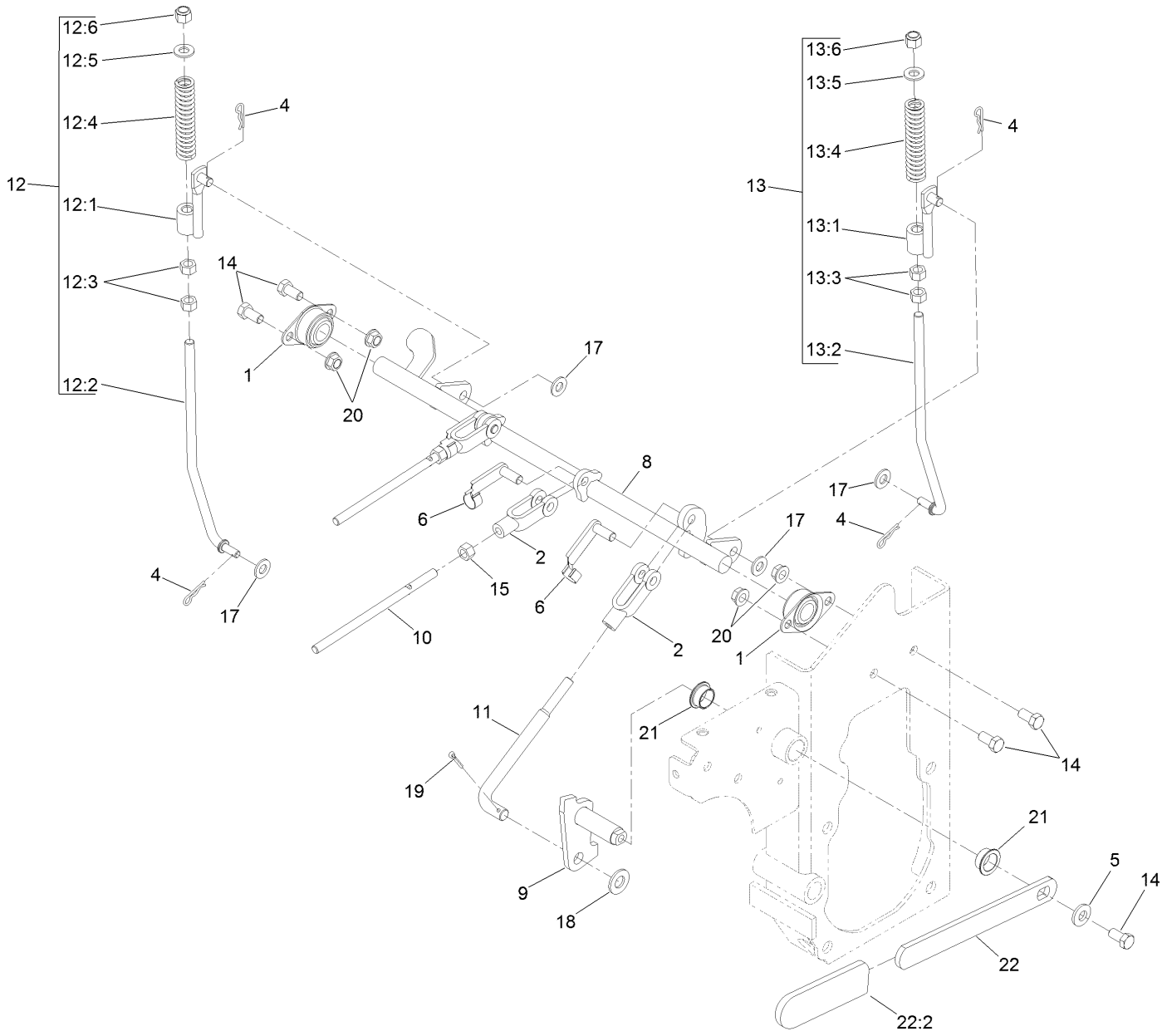

# Parking Brake Assembly (continued)

| Ref. | Part Number | Qty. | Description |
|---|---|---|---|
| 1 | 1-633102 | 2 | Bearing-Flange, Side |
| 2 | 1-633131 | 3 | Yoke-Linkage, Brake |
| 4 | 1-806003 | 4 | Pin-Cotter |
| 5 | 98-5975 | 1 | Washer-Belleville |
| 6 | 103-2399 | 3 | Pin-Spring, Clevis |
| 8 | 116-7483-03 | 1 | Shaft-Brake |
| 9 | 116-7486 | 1 | Pivot-Brake |
| 10 | 116-7838 | 2 | Rod-Linkage, Brake |
| 11 | 116-8474 | 1 | Rod-Linkage, Brake |
| 12 | 116-9748 | 1 | RH Brake Linkage ASM |
| 12:1 | 116-8467 | 1 | Brake Linkage ASM |
| 12:2 | 116-8465 | 1 | Link-Brake, RH |
| 12:3 | 3219-3 | 2 | Nut-Hex |
| 12:4 | 116-8470 | 1 | Spring-Compression |
| 12:5 | 3256-24 | 1 | Washer-Flat |
| 12:6 | 3296-6 | 1 | Nut-Lock |

| Ref. | Part Number | Qty. | Description |
|---|---|---|---|
| 13 | 116-9749 | 1 | LH Brake Linkage ASM |
| 13:1 | 116-8467 | 1 | Brake Linkage ASM |
| 13:2 | 116-8464 | 1 | Link-Brake, LH |
| 13:3 | 3219-3 | 2 | Nut-Hex |
| 13:4 | 116-8470 | 1 | Spring-Compression |
| 13:5 | 3256-24 | 1 | Washer-Flat |
| 13:6 | 3296-6 | 1 | Nut-Lock |
| 14 | 323-4 | 5 | Screw-HH |
| 15 | 3219-3 | 2 | Nut-Hex |
| 17 | 3256-24 | 4 | Washer-Flat |
| 18 | 3256-26 | 1 | Washer-Flat |
| 19 | 3272-10 | 1 | Pin-Cotter |
| 20 | 3290-357 | 4 | Nut-HHF, Whiz |
| 21 | 108519 | 2 | Bushing-Bronze |
| 22 | 103-9469 | 1 | Park Brake Handle ASM |
| 22:2 | 1-633268 | 1 | Grip-Lever |

# Seat and Console Assembly

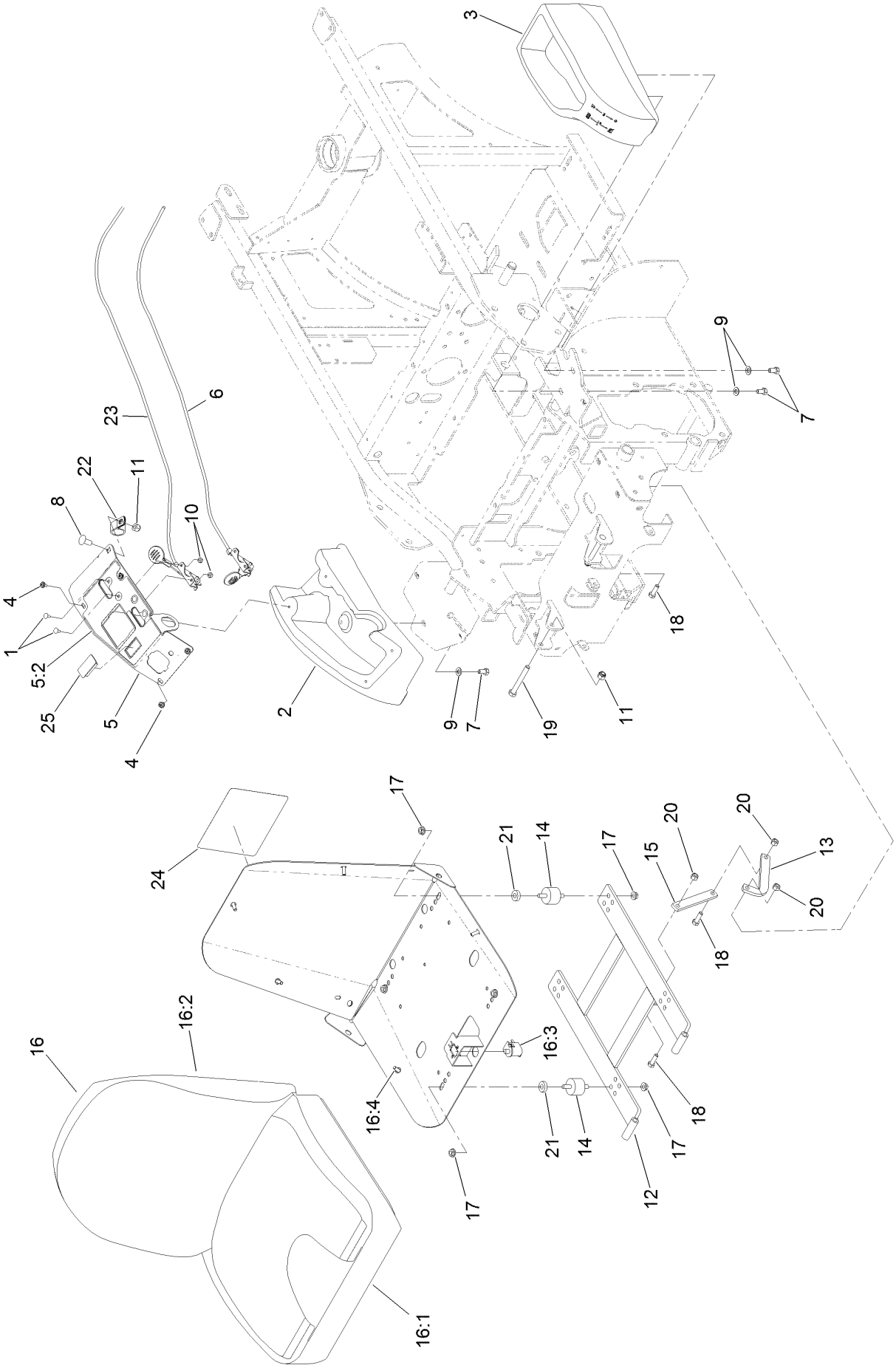

# Seat and Console Assembly (continued)

| Ref. | Part Number | Qty. | Description |
|---|---|---|---|
| 1 | 1-807513 | 4 | Bolt-CARR |
| 2 | 130-2857 | 1 | Console-RH |
| 3 | 126-4343 | 1 | Console-LH |
| 4 | 109-2661 | 4 | Screw-PPH |
| 5 | 130-2896 | 1 | Control Panel ASM |
| 5:2 | 130-2880 | 1 | Decal-Control |
| 6 | 109-4641 | 1 | Cable-Throttle |
| 7 | 322-2 | 6 | Screw-HH |
| 8 | 3231-27 | 1 | Screw-CARR |
| 9 | 3256-23 | 6 | Washer-Flat |
| 10 | 3296-2 | 4 | Nut-Lock, NI |
| 11 | 3296-39 | 3 | Nut-Lock, NI |
| 12 | 103-4362-03 | 1 | Frame-Seat |
| 13 | 116-9554 | 1 | Link-Seat Stop |
| 14 | 103-5496 | 4 | Mount-Vibration, Rubber |
| 15 | 103-8563 | 1 | Link-Seat |
| 16 | 130-2852 | 1 | Seat ASM |
| 16:1 | 121-4751 | 1 | Cushion-Seat, Bottom |
| 16:2 | 121-4752 | 1 | Cushion-Seat, Back |
| 16:3 | 82-2190 | 1 | Switch-Bail |
| 16:4 | 103-8383 | 5 | Bolt-Seat |
| 17 | 32128-20 | 8 | Nut-HF |
| 18 | 322-5 | 3 | Screw-HH |
| 19 | 323-14 | 2 | Screw-HH |
| 20 | 3296-29 | 3 | Nut-Lock, NI |
| 21 | 5-0652 | 4 | Spacer |
| 22 | 1-643312 | 1 | Clip-Loom |
| 23 | 109-4640 | 1 | Cable-Choke |
| 24 | 116-9044 | 1 | Decal-Service Aid |
| 25 | 99-7420 | 1 | Plug-Hole |

# Hydraulic Assembly

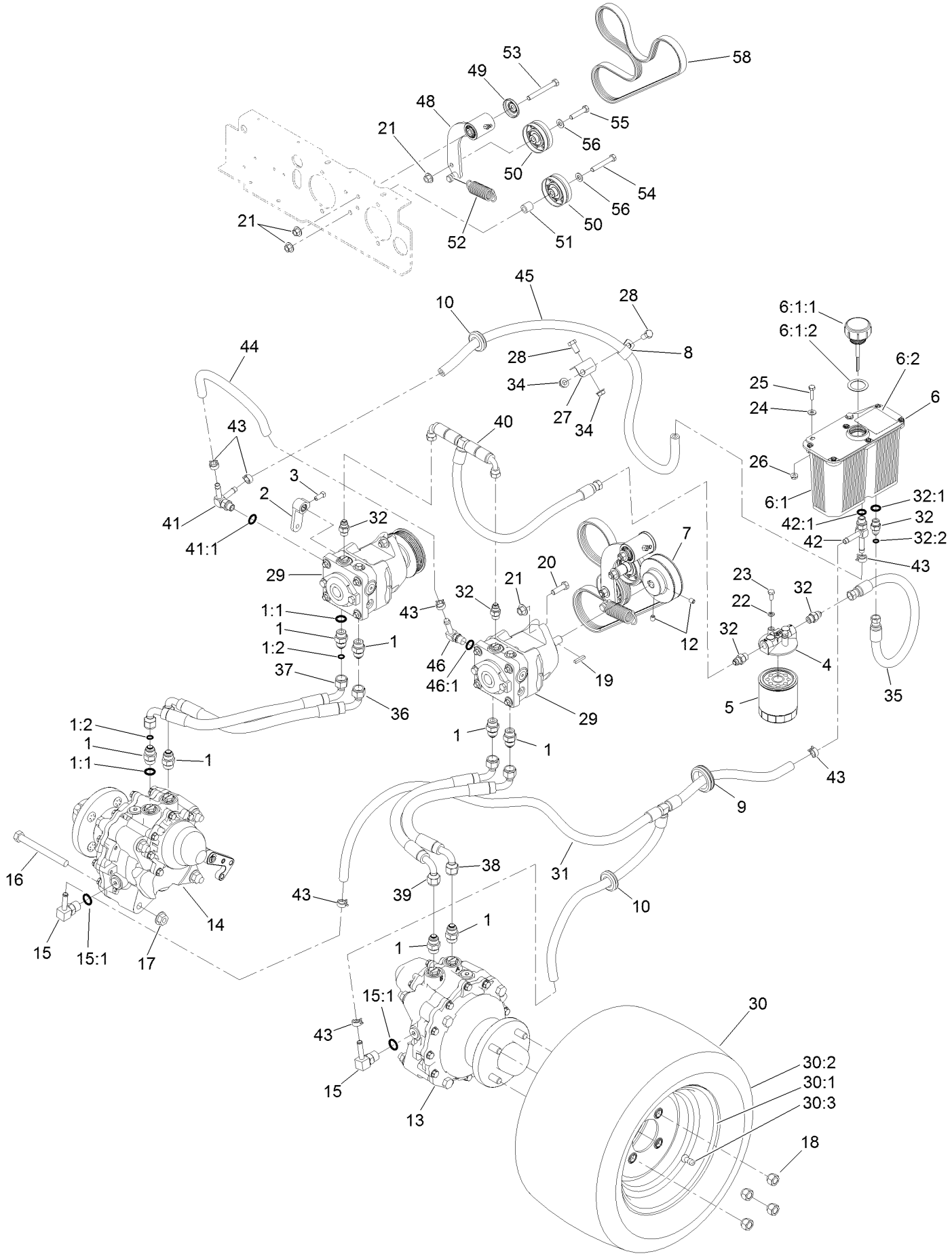

# Hydraulic Assembly (continued)

| Ref. | Part Number | Qty. | Description |
|---|---|---|---|
| 1 | 1-603990 | 8 | Fitting-Straight |
| 1:1 | 1-603920 | 1 | O-Ring |
| 1:2 | 1-603992 | 1 | O-Ring |
| 2 | 1-632208 | 2 | Arm-Control, Pump |
| 3 | 120-6474 | 2 | Screw-Set, SQH |
| 4 | 104-7836 | 1 | Head-Filter |
| 5 | 114-3494 | 1 | Element-Filter, 25 Micron |
| 6 | 116-9274 | 1 | Reservoir ASM |
| 6:1 | | 1 | Reservoir-HYD ● |
| 6:1:1 | 116-9273 | 1 | Reservoir Cap ASM |
| 6:1:2 | 103-1949 | 1 | Gasket-Cap |
| 6:2 | 115-4212 | 1 | Decal-Warning |
| 7 | 103-4246 | 2 | Sheave |
| 8 | 1-633396 | 1 | Clip-Loom |
| 9 | 103-7706 | 1 | Grommet |
| 10 | 1-543286 | 2 | Grommet |
| 12 | 1-803310 | 4 | Screw-Set |
| 13 | 116-7401 | 1 | Motor-HYD, LH |
| 14 | 116-7402 | 1 | Motor-HYD, RH |
| 15 | 354-134 | 2 | Fitting-HYD, 90 DEG |
| 15:1 | 237-79 | 1 | O-Ring |
| 16 | 325-19 | 8 | Screw-HH |
| 17 | 32128-49 | 8 | Nut-HHF |
| 18 | 242-50 | 8 | Nut-Lug |
| 19 | 1-807272 | 2 | Key |
| 20 | 323-7 | 4 | Screw-HH |
| 21 | 32128-43 | 7 | Nut-Flange |
| 22 | 1-805004 | 2 | Washer-Lock |
| 23 | 321-3 | 2 | Screw-HH |
| 24 | 3256-22 | 2 | Washer-Flat |
| 25 | 321-6 | 2 | Screw-HH |
| 26 | 32128-33 | 2 | Nut-HF |
| 27 | 103-8631 | 1 | Bracket-Clamp |
| 28 | 323-4 | 2 | Screw-HH |
| 29 | 116-7836 | 2 | 12Cc Hydro Pump ASM |
| 30 | 130-2869 | 2 | Wheel And Tire ASM |
| 30:1 | 130-2868 | 1 | Wheel |
| 30:2 | 105-1945 | 1 | Tire |
| 30:3 | 232-27 | 1 | Stem-Valve |
| 31 | 116-7831 | 1 | Hydraulic Hose ASM |
| 32 | 103-2156 | 5 | Fitting-Straight |
| 32:1 | 1-603921 | 1 | O-Ring |
| 32:2 | 103-1020 | 1 | O-Ring |
| 34 | 3290-357 | 2 | Nut-HHF, Whiz |
| 35 | 126-4400 | 1 | Hydraulic Hose ASM |
| 36 | 116-7827 | 1 | Hydraulic Hose ASM |
| 37 | 116-7828 | 1 | Hydraulic Hose ASM |
| 38 | 116-7829 | 1 | Hydraulic Hose ASM |
| 39 | 116-7830 | 1 | Hydraulic Hose ASM |
| 40 | 109-1264 | 1 | Hydraulic Hose ASM |
| 41 | 103-5469 | 1 | Adapter-Tee |
| 41:1 | 237-42 | 1 | O-Ring |
| 42 | 103-1828 | 1 | Adapter-Run, Tee |
| 42:1 | 237-42 | 1 | O-Ring |
| 43 | 103-1988 | 7 | Clamp-Hose |
| 44 | 103-5452 | 1 | Hose-HYD |
| 45 | 103-5477 | 1 | Hose-HYD |
| 46 | 100-4887 | 1 | Fitting-Barbed, 90 DEG |
| 46:1 | 237-42 | 1 | O-Ring |
| 48 | 103-7349 | 1 | Short Idler ASM |
| 49 | 103-2916 | 1 | Guard-Top |
| 50 | 116-6361 | 2 | Pulley |
| 51 | 106-5574 | 1 | Spacer-Mounting, Steering |
| 52 | 1-653331 | 1 | Spring-Idler |
| 53 | 323-20 | 1 | Screw-HH |
| 54 | 323-12 | 1 | Screw-HH |
| 55 | 323-9 | 1 | Screw-HH |
| 56 | 3256-24 | 2 | Washer-Flat |
| 58 | 130-2871 | 1 | Belt-V |

● Not serviced separately

# Hydraulic Pump Assembly No. 116-7836

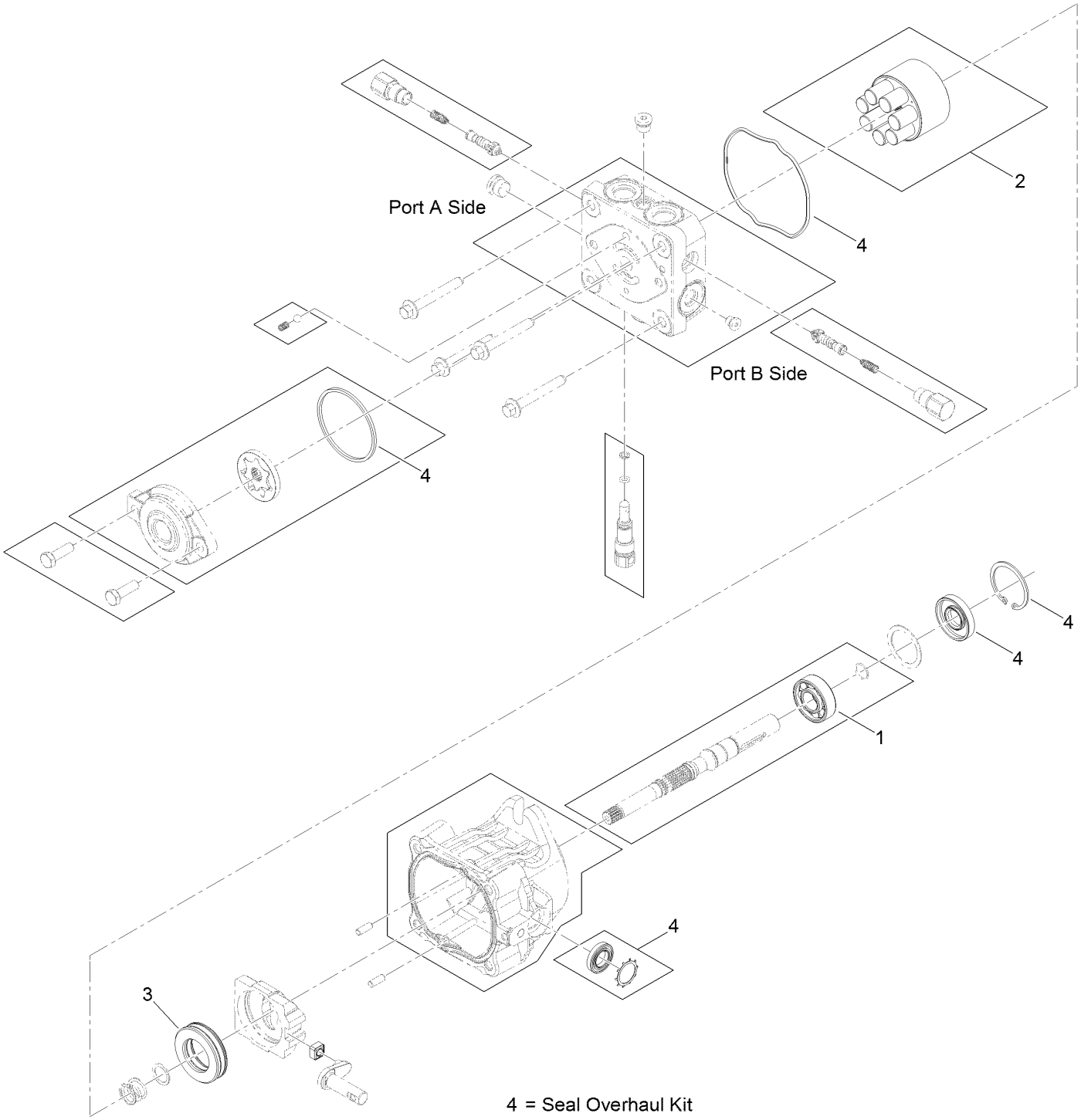

# Hydraulic Pump Assembly No. 116-7836 (continued)

| Ref. | Part Number | Qty. | Description |
|---|---|---|---|
| 1 | 104-5311 | 1 | Bearing-Ball |
| 2 | 103-7443 | 1 | Cylinder Block Kit |
| 3 | 121-3235 | 1 | Bearing-Thrust, Plastic Cage |
| 4 | 105-6184 | 1 | Seal Overhaul Kit |

# Idler Assembly No. 103-7349

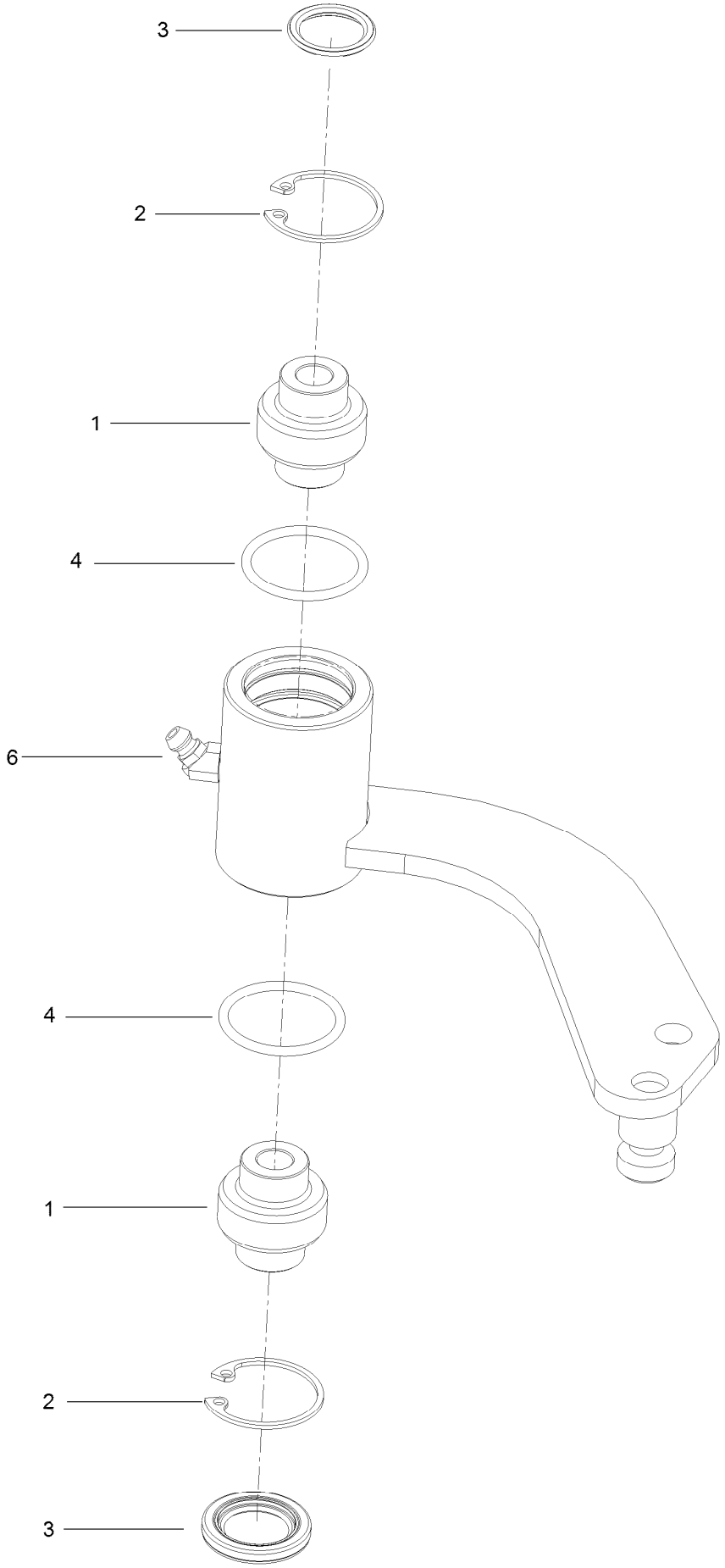

# Idler Assembly No. 103-7349 (continued)

| Ref. | Part Number | Qty. | Description |
|---|---|---|---|
| 1 | 103-3504 | 2 | Bearing-Spherical |
| 2 | 32120-10 | 2 | Ring-Snap |
| 3 | 103-3506 | 2 | Seal-Lip, Single |
| 4 | 106-7159 | 2 | O-Ring |
| 6 | 302-11 | 1 | Fitting-Lube, 45 DEG |

# Blower Mounting Assembly

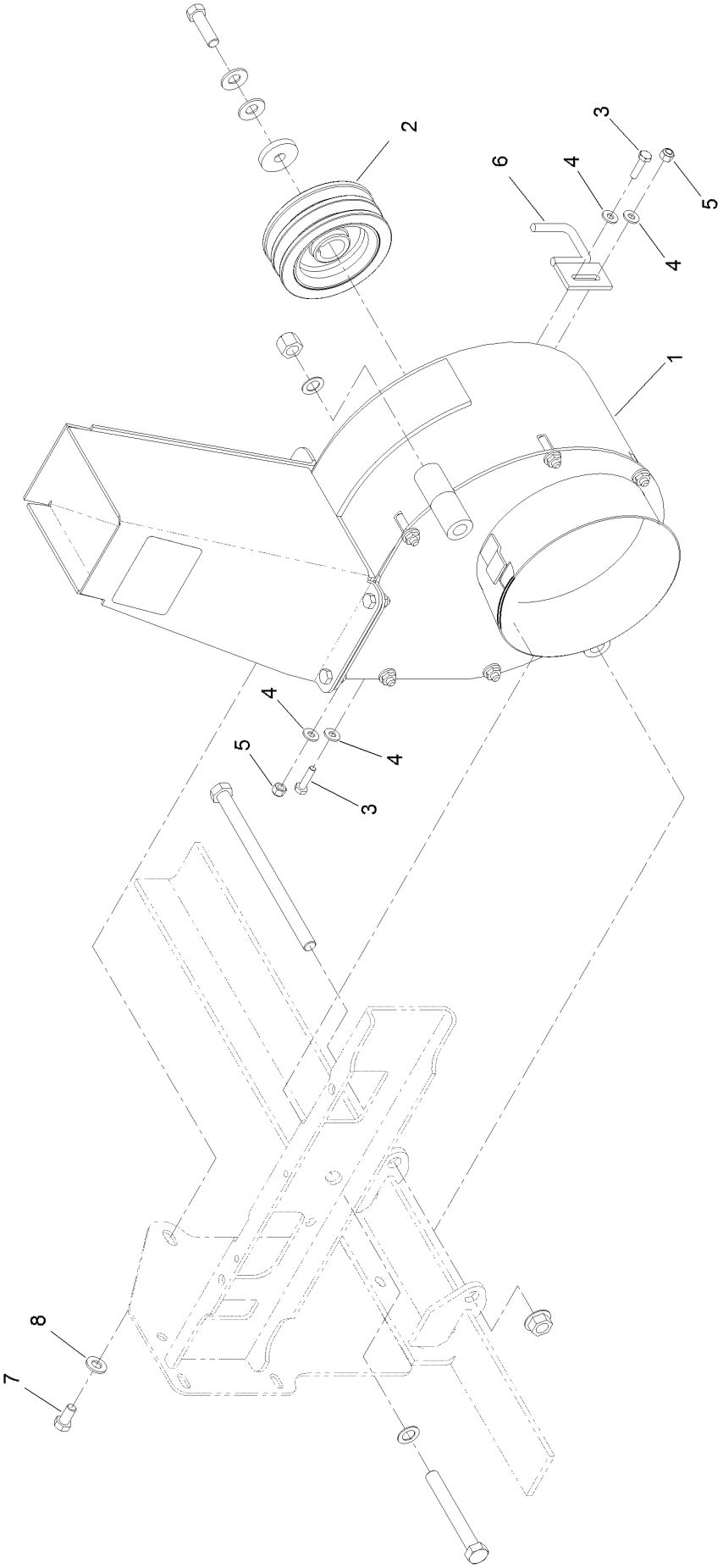

# Blower Mounting Assembly (continued)

| Ref. | Part Number | Qty. | Description |
|---|---|---|---|
| 1 | 116-9649 | 1 | Blower ASM |
| 2 | 103-6733 | 1 | Sheave-Blower |
| 3 | 321-6 | 2 | Screw-HH |
| 4 | 3256-22 | 4 | Washer-Flat |
| 5 | 3296-42 | 2 | Nut-Lock, NI |
| 6 | 103-9167-03 | 1 | Guide |
| 7 | 323-4 | 1 | Screw-HH |
| 8 | 3256-24 | 1 | Washer-Flat |

# Blower Assembly No. 116-9649

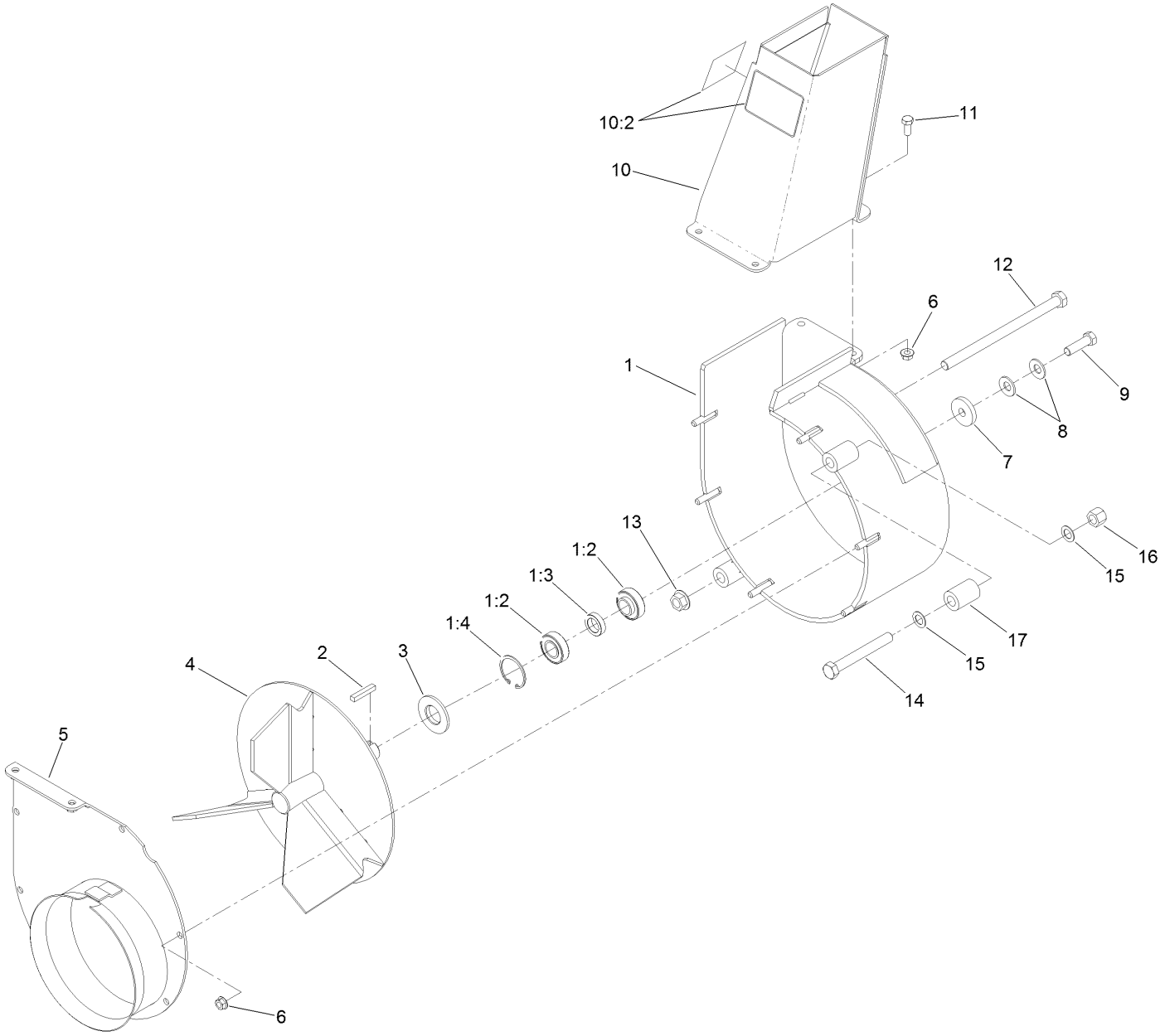

# Blower Assembly No. 116-9649 (continued)

| Ref. | Part Number | Qty. | Description |
|---|---|---|---|
| 1 | 116-9648 | 1 | Housing ASM |
| 1:2 | 103-3540 | 2 | Bearing-Ball |
| 1:3 | 103-4921 | 1 | Spacer-Bearing |
| 1:4 | 32120-8 | 2 | Ring-Snap |
| 2 | 67-7490 | 1 | Key-Square |
| 3 | 103-3894 | 1 | Spacer-Blower |
| 4 | 103-5194 | 1 | Impeller-3 Blade |
| 5 | 103-3370-03 | 1 | Cover-Blower |
| 6 | 32128-20 | 10 | Nut-HF |
| 7 | 1-543610 | 1 | Washer-Clutch |
| 8 | 1-603610 | 2 | Washer-Spring |
| 9 | 3212-6 | 1 | Screw-HH |
| 10 | 103-9474 | 1 | Discharge Chute ASM |
| 10:2 | 116-8943 | 2 | Decal-Danger, Impeller |
| 11 | 322-3 | 4 | Screw-HH |
| 12 | 325-42 | 1 | Screw-HH |
| 13 | 32128-23 | 1 | Nut-HF |
| 14 | 325-17 | 1 | Screw-HH |
| 15 | 18-9810 | 2 | Washer-Thrust |
| 16 | 3296-23 | 1 | Nut-Lock, NI |
| 17 | 103-6999 | 1 | Spacer-Mount |

# Engine, Muffler and Air Cleaner Assembly

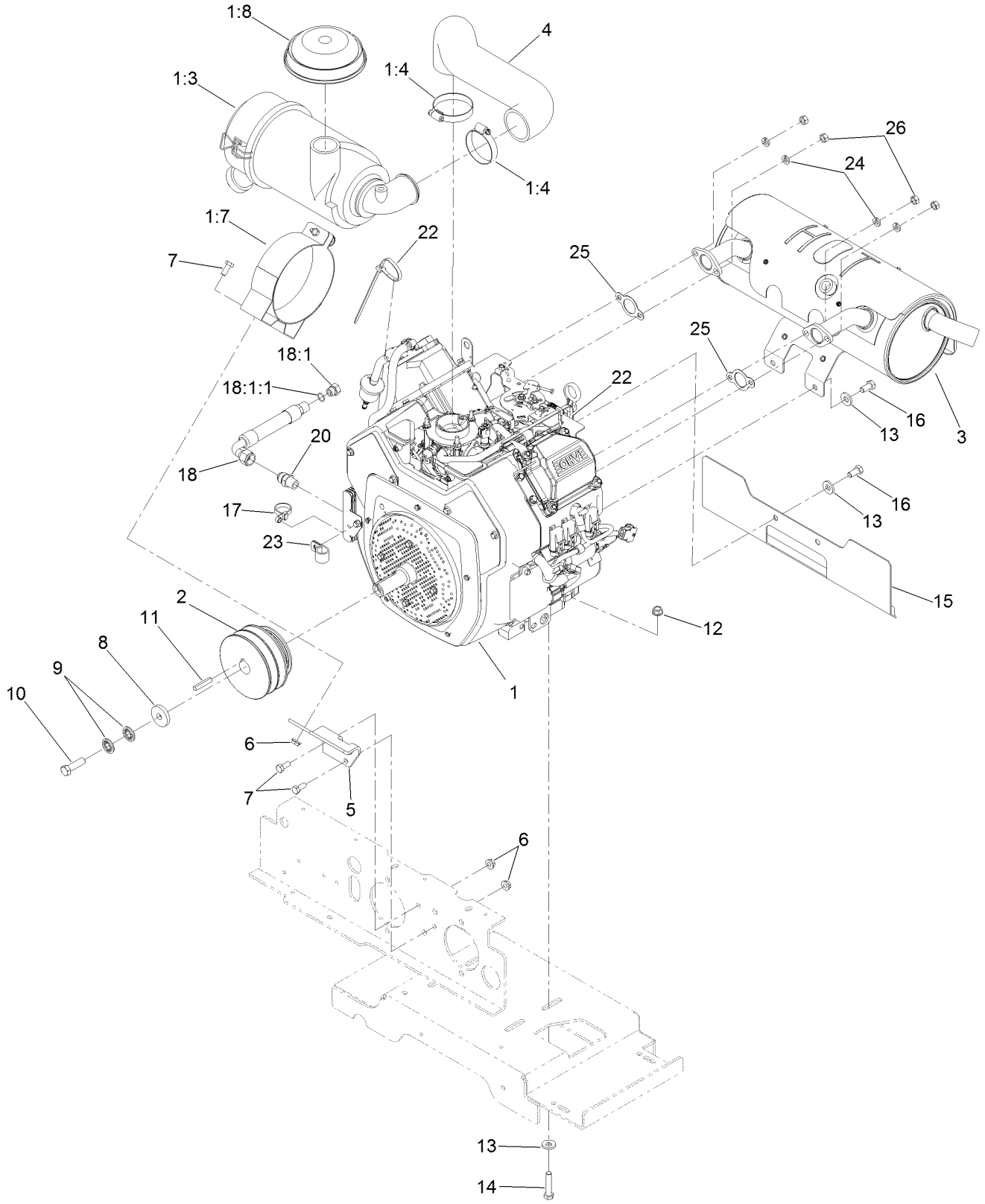

# Engine, Muffler and Air Cleaner Assembly (continued)

| Ref. | Part Number | Qty. | Description |
|---|---|---|---|
| 1 | | 1 | Engine-Kohler, Ch740 ■● |
| 1:3 | 103-8569 | 1 | Air Cleaner Canister ASM |
| 1:4 | 2412-42 | 2 | Clamp-Hose |
| 1:7 | 103-1058 | 1 | Bracket-Filter, Air |
| 1:8 | 100-2436 | 1 | Hood |
| 2 | 103-6731 | 1 | Sheave-Engine |
| 3 | 103-7444 | 1 | Muffler |
| 4 | 103-6961 | 1 | Hose-Air Intake |
| 5 | 103-3695-03 | 1 | Bracket-Filter, Air |
| 6 | 32128-20 | 4 | Nut-HF |
| 7 | 322-3 | 4 | Screw-HH |
| 8 | 1-543610 | 1 | Washer-Clutch |
| 9 | 1-603610 | 2 | Washer-Spring |
| 10 | 3212-6 | 1 | Screw-HH ◆ |
| 11 | 67-7490 | 1 | Key-Square |
| 12 | 3290-357 | 4 | Nut-HHF, Whiz |
| 13 | 98-5975 | 8 | Washer-Belleville |
| 14 | 323-9 | 4 | Screw-HH |
| 15 | 109-0181-03 | 1 | Shield-Exhaust |
| 16 | 323-4 | 4 | Screw-HH |
| 17 | 109-7896 | 1 | Tie-Cable |
| 18 | 116-5338 | 1 | Oil Drain Hose ASM |
| 18:1 | 353-508 | 1 | Plug-HH |
| 18:1:1 | 237-42 | 1 | O-Ring |
| 20 | 116-1455 | 1 | Fitting-Straight ▲ |
| 22 | 1-303335 | 3 | Tie-Plastic |
| 23 | 1-633396 | 1 | Clip-Loom |
| 24 | 1-805005 | 4 | Washer-Lock |
| 25 | 1-653291 | 2 | Gasket-Exhaust |
| 26 | 33014-00 | 4 | Nut-Hex |

● Not serviced separately
▲ Use a Teflon Pipe Sealant or equivalent on threads.
◆ Use Pro-Lock, Nut Type (P/N 1-840022, .5ml tube) on threads.
■ Obtain parts from www.kohlerplus.com

# Fuel Tank Assembly

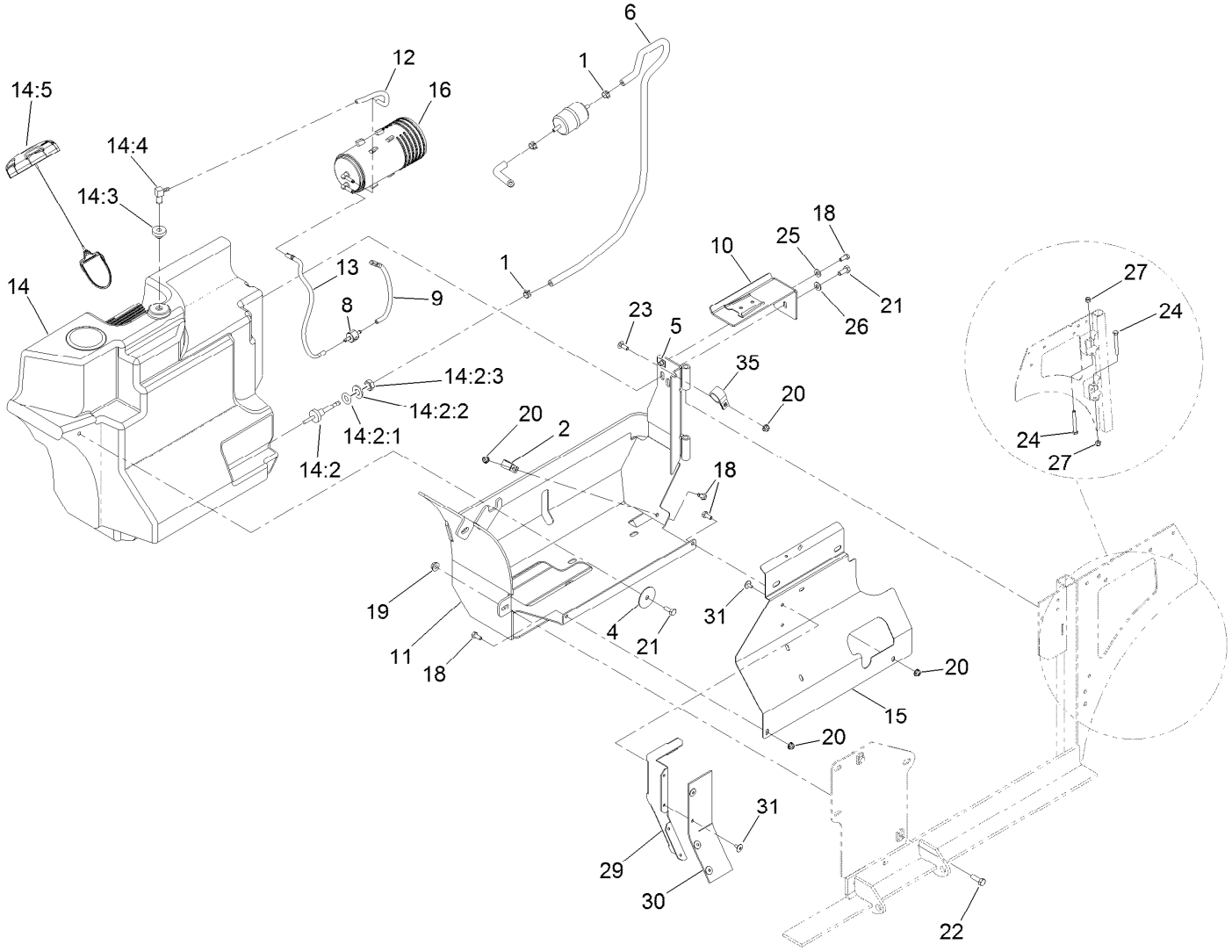

# Fuel Tank Assembly (continued)

| Ref. | Part Number | Qty. | Description |
|---|---|---|---|
| 1 | 2412-98 | 2 | Clamp-Hose |
| 2 | 1-513762 | 1 | Clip-Loom |
| 4 | 1-653036 | 1 | Washer |
| 5 | 107069 | 1 | Clip |
| 6 | 109-0284 | 1 | Hose-Fuel |
| 8 | 133-8499 | 1 | Valve-Check, Vacuum |
| 9 | 116-2619 | 1 | Hose-Vent, Formed |
| 10 | 116-2847-03 | 1 | Canister Bracket ASM |
| 11 | 116-2848-03 | 1 | Tank Frame ASM |
| 12 | 116-2966 | 1 | Hose-Vent, Formed |
| 13 | 116-2967 | 1 | Hose-Vent, Formed |
| 14 | 116-8365 | 1 | Fuel Tank ASM |
| 14:2 | 103-6057 | 1 | Fitting-Fuel, Bulkhead ● |
| 14:2:1 | 103-2784 | 1 | O-Ring |
| 14:2:2 | 3256-26 | 1 | Washer-Flat |
| 14:2:3 | 3220-5 | 1 | Nut-Jam |
| 14:3 | 46-6560 | 1 | Bushing |
| 14:4 | 100-1596 | 1 | Fitting-90 DEG |
| 14:5 | 120-5461 | 1 | Cap-Fuel, Ratcheting |
| 15 | 116-7928-03 | 1 | Panel-Tank Shield |
| 16 | 117-1221 | 1 | Canister-Carbon, 800Cc |
| 18 | 321-3 | 4 | Screw-HH |
| 19 | 32128-20 | 2 | Nut-HF |
| 20 | 104-7201 | 4 | Nut-Flange, NI |
| 21 | 322-3 | 2 | Screw-HH ● |
| 22 | 322-5 | 2 | Screw-HH ■ |
| 23 | 3229-1 | 1 | Bolt-CARR |
| 24 | 323-14 | 2 | Screw-HH |
| 25 | 3256-22 | 1 | Washer-Flat |
| 26 | 3256-23 | 1 | Washer-Flat |
| 27 | 3296-39 | 2 | Nut-Lock, NI |
| 29 | 103-7095-03 | 1 | Deflector-Air |
| 30 | 103-9658 | 1 | Flap-Rubber |
| 31 | 1-803035 | 9 | Rivet-Pop |
| 35 | 110-0824 | 1 | R-Clamp |

● Use Pro-Lock, Nut Type (P/N 1-840022, .5ml tube) on threads.
■ Use Pro-Lock retaining type, Part no. 1-840023 (.5cc tube) on threads.

# Electrical System Assembly

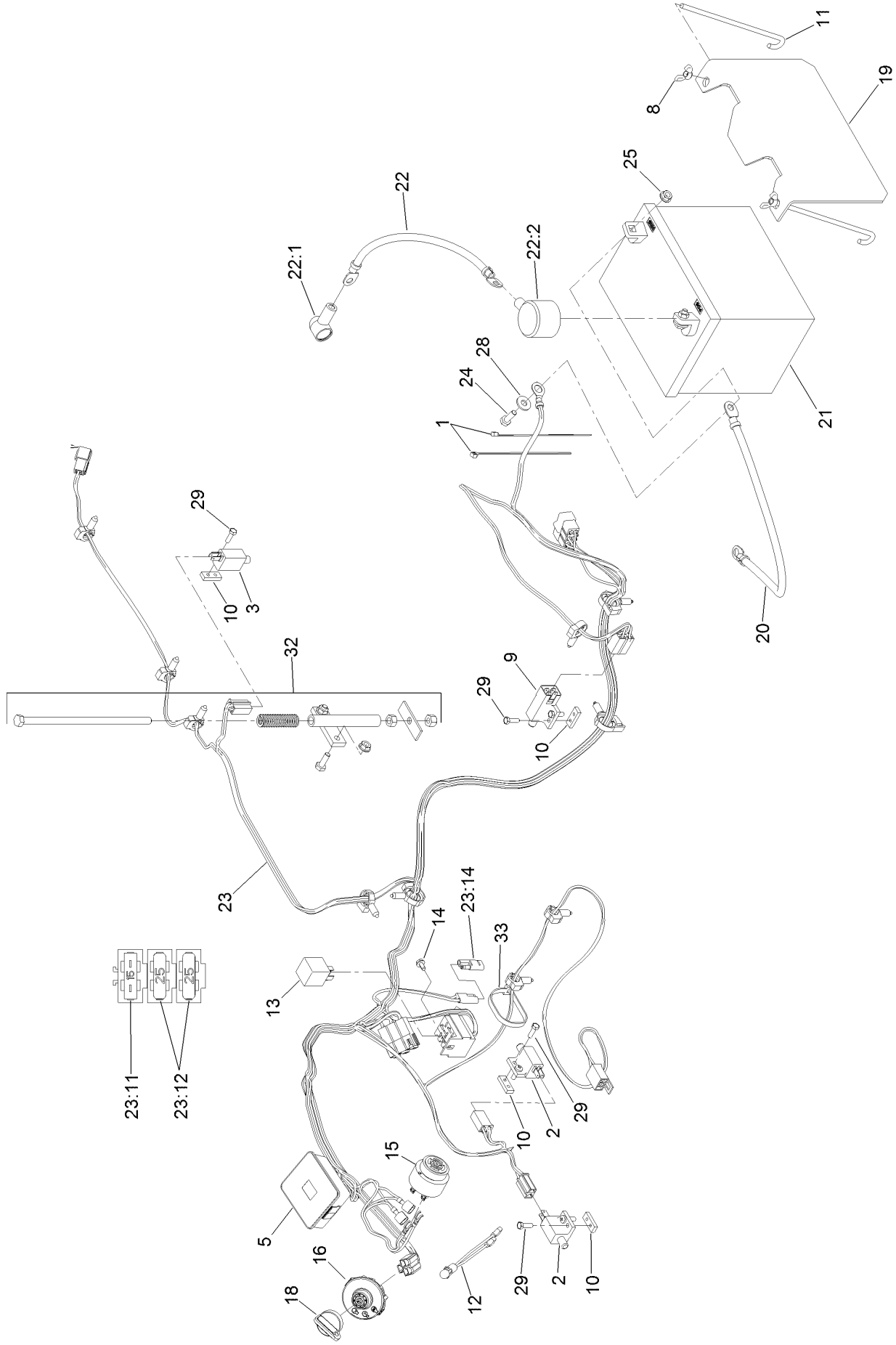

# Electrical System Assembly (continued)

| Ref. | Part Number | Qty. | Description |
|---|---|---|---|
| 1 | 1-303287 | 2 | Tie-Cable |
| 2 | 1-513051 | 2 | Switch-Open, Normally |
| 3 | 1-513152 | 1 | Switch-Closed, Normally |
| 5 | 116-8812 | 1 | Hour Meter ASM |
| 8 | 1-543792 | 2 | Wingnut |
| 9 | 1-633111 | 1 | Switch |
| 10 | 1-633181 | 4 | Plate-Tapped |
| 11 | 1-633651 | 2 | Bolt-Holddown |
| 12 | 1-643267 | 1 | Indicator-LED, Red |
| 13 | 1-643275 | 1 | Relay |
| 14 | 104-2065 | 1 | Screw-HWH |
| 15 | 103-0205 | 1 | Alarm-Tone, Dual |
| 16 | 117-2221 | 1 | Switch-Ignition |
| 18 | 63-8360 | 1 | Key-Ignition |
| 19 | 103-4161-03 | 1 | Hold Down-Battery |
| 20 | 103-8355 | 1 | Cable-Battery, Negative |

| Ref. | Part Number | Qty. | Description |
|---|---|---|---|
| 21 | | 1 | Battery (300 CCA, Wet) ●■ |
| 22 | 116-4730 | 1 | Cable-Battery, Positive |
| 22:1 | 1-543393 | 1 | Insulator-Solenoid |
| 22:2 | 109-2407 | 1 | Insulator-Battery |
| 23 | 116-9114 | 1 | Harness-Wiring ▲ |
| 23:11 | 109355 | 1 | Fuse-Blade, 15 Amp |
| 23:12 | 109102 | 2 | Fuse-Blade, 25 Amp |
| 23:14 | 116-0053 | 1 | Cap-Plug |
| 24 | 321-4 | 4 | Screw-HH |
| 25 | 32128-33 | 4 | Nut-HF |
| 28 | 3256-2 | 2 | Washer-Flat |
| 29 | 3290-134 | 8 | Screw |
| 32 | 103-8528 | 1 | Hopper Switch Actuator ASM |
| 33 | 1-303335 | 4 | Tie-Plastic |

● Obtain locally.
■ Not serviced separately
▲ Use dielectric grease on all unsealed connectors and terminals only. Do not apply in sealed connectors.

# Hopper Switch Actuator Assembly No. 103-8528

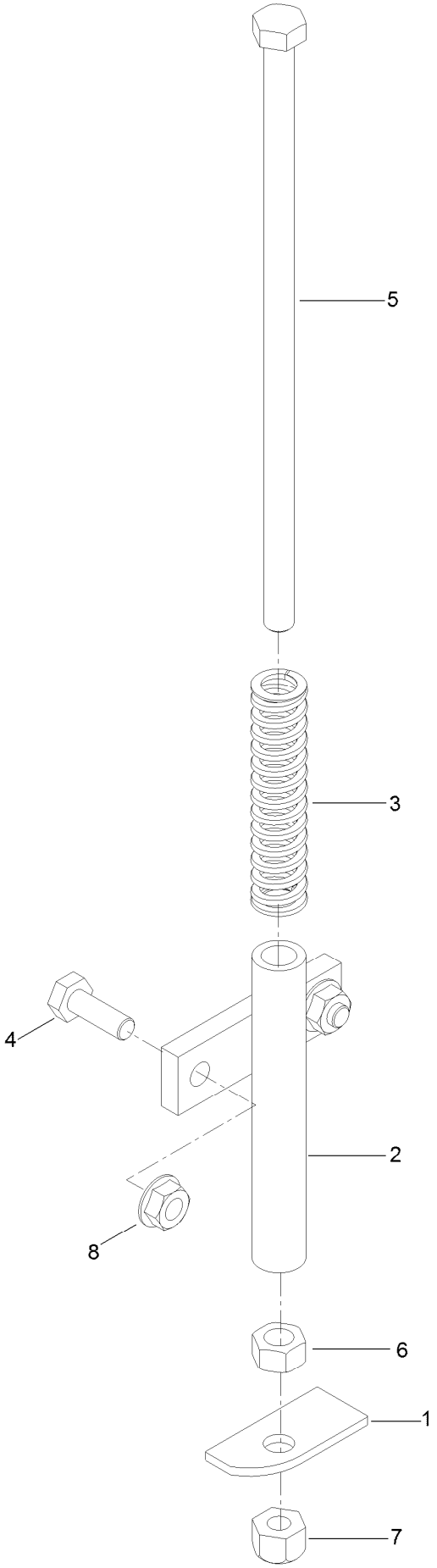

# Hopper Switch Actuator Assembly No. 103-8528 (continued)

| Ref. | Part Number | Qty. | Description |
|---|---|---|---|
| 1 | 126-7505 | 1 | Plate-Switch |
| 2 | 1-522424-03 | 1 | Mount-Spring, Seat |
| 3 | 1-523415 | 1 | Spring-Switch, Seat |
| 4 | 321-4 | 2 | Screw-HH |
| 5 | 322-50 | 1 | Screw-HH |
| 6 | 3217-6 | 1 | Nut-Hex |
| 7 | 3296-29 | 1 | Nut-Lock, NI |
| 8 | 32128-33 | 2 | Nut-HF |

# Hopper Mounting Assembly

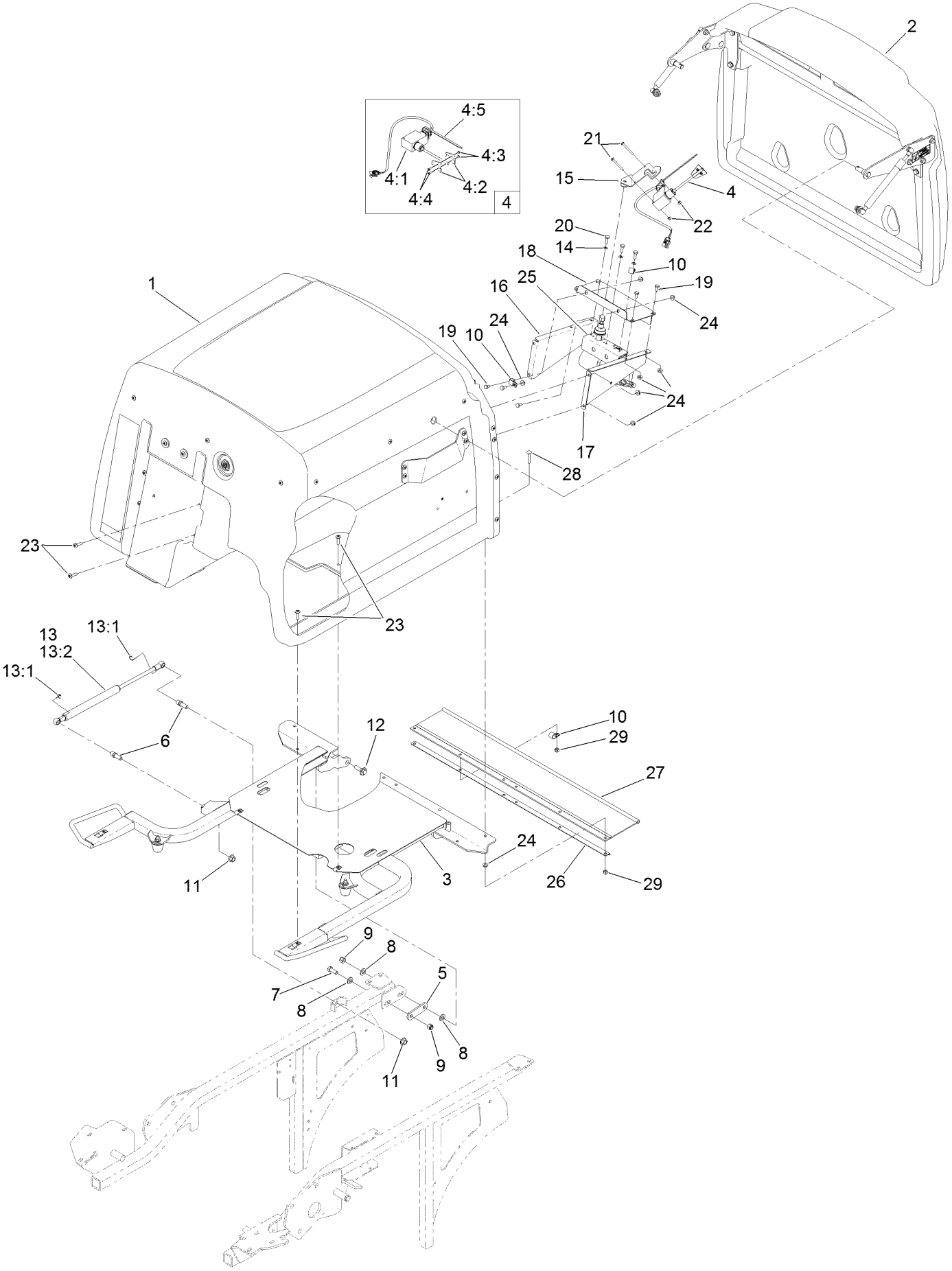

# Hopper Mounting Assembly (continued)

| Ref. | Part Number | Qty. | Description |
|---|---|---|---|
| 1 | 130-2872 | 1 | Hopper ASM |
| 2 | 130-2875 | 1 | Hopper Door ASM |
| 3 | 109-4086 | 1 | Hopper Frame ASM |
| 4 | 116-9404 | 1 | Fill Sensor ASM |
| 4:1 | 109-3854 | 1 | Fill Sensor Wire Kit |
| 4:2 | 103-8789 | 2 | Flag-Sensor, Fill |
| 4:3 | 3296-9 | 2 | Nut-Lock |
| 4:4 | 9107622 | 2 | Screw-PAN |
| 4:5 | 1-303335 | 1 | Tie-Plastic |
| 5 | 1-633068 | 2 | Arm-Lift, Deck |
| 6 | 103-5426 | 2 | Stud-Ball |
| 7 | 323-6 | 2 | Screw-HH |
| 8 | 3256-24 | 6 | Washer-Flat |
| 9 | 3296-39 | 4 | Nut-Lock, NI |
| 10 | 1-513762 | 3 | Clip-Loom |
| 11 | 33005-00 | 2 | Nut-HF |
| 12 | 614672 | 2 | Bolt-Shoulder |
| 13 | 109-0716 | 1 | Damper Kit |

| Ref. | Part Number | Qty. | Description |
|---|---|---|---|
| 13:1 | 103-8325 | 2 | Clip-Retainer |
| 13:2 | 103-5425 | 1 | Shock-Compression, Gas |
| 14 | 1-303435 | 3 | Washer-Spring |
| 15 | 109-3648 | 1 | Mount-Switch |
| 16 | 103-6067-03 | 1 | Bracket-Drive Motor, LH |
| 17 | 103-6068-03 | 1 | Bracket-Drive Motor, RH |
| 18 | 103-7085-03 | 1 | Plate-Switch |
| 19 | 321-2 | 7 | Screw-HH |
| 20 | 329-4 | 3 | Screw-HH |
| 21 | 3250-48 | 2 | Screw-PPH |
| 22 | 3296-2 | 2 | Nut-Lock, NI |
| 23 | 32105-32 | 8 | Screw-TTH |
| 24 | 32128-33 | 17 | Nut-HF |
| 25 | 103-9121 | 1 | Motor Wiring ASM |
| 26 | 103-6022-03 | 1 | Channel-Frame, Hopper |
| 27 | 103-6025 | 1 | Deflector-Grass |
| 28 | 3229-4 | 6 | Screw-CARR |
| 29 | 3296-42 | 6 | Nut-Lock, NI |

# Hopper Frame Assembly No. 109-4086

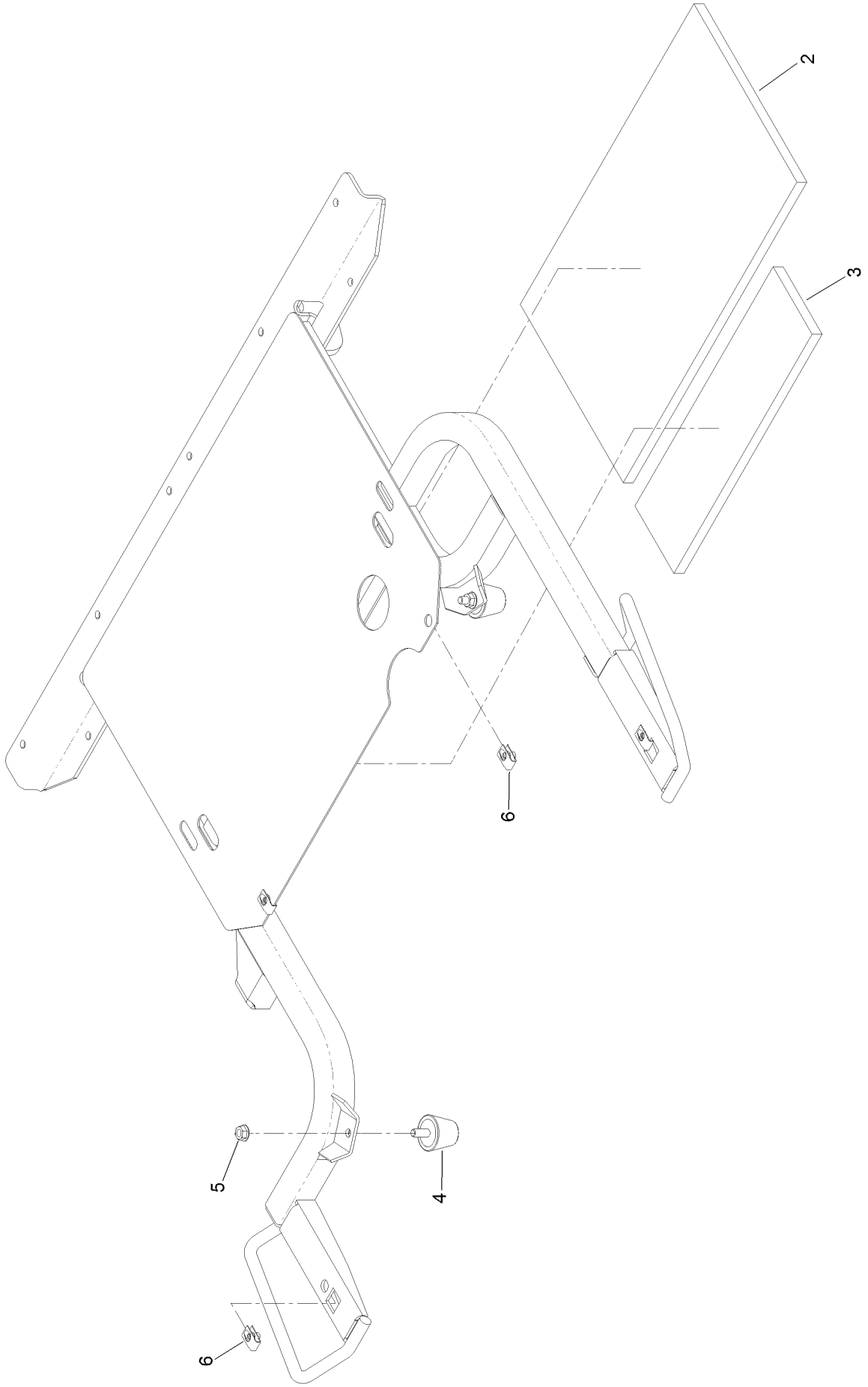

# Hopper Frame Assembly No. 109-4086 (continued)

| Ref. | Part Number | Qty. | Description |
|---|---|---|---|
| 2 | 103-7824 | 1 | Insulation-Foam Pad, Rear |
| 3 | 103-7825 | 1 | Insulation-Foam Pad, Front |
| 4 | 1-543963 | 2 | Bumper-Rubber |
| 5 | 32128-20 | 2 | Nut-HF |
| 6 | 107069 | 4 | Clip |

# Drive Assembly

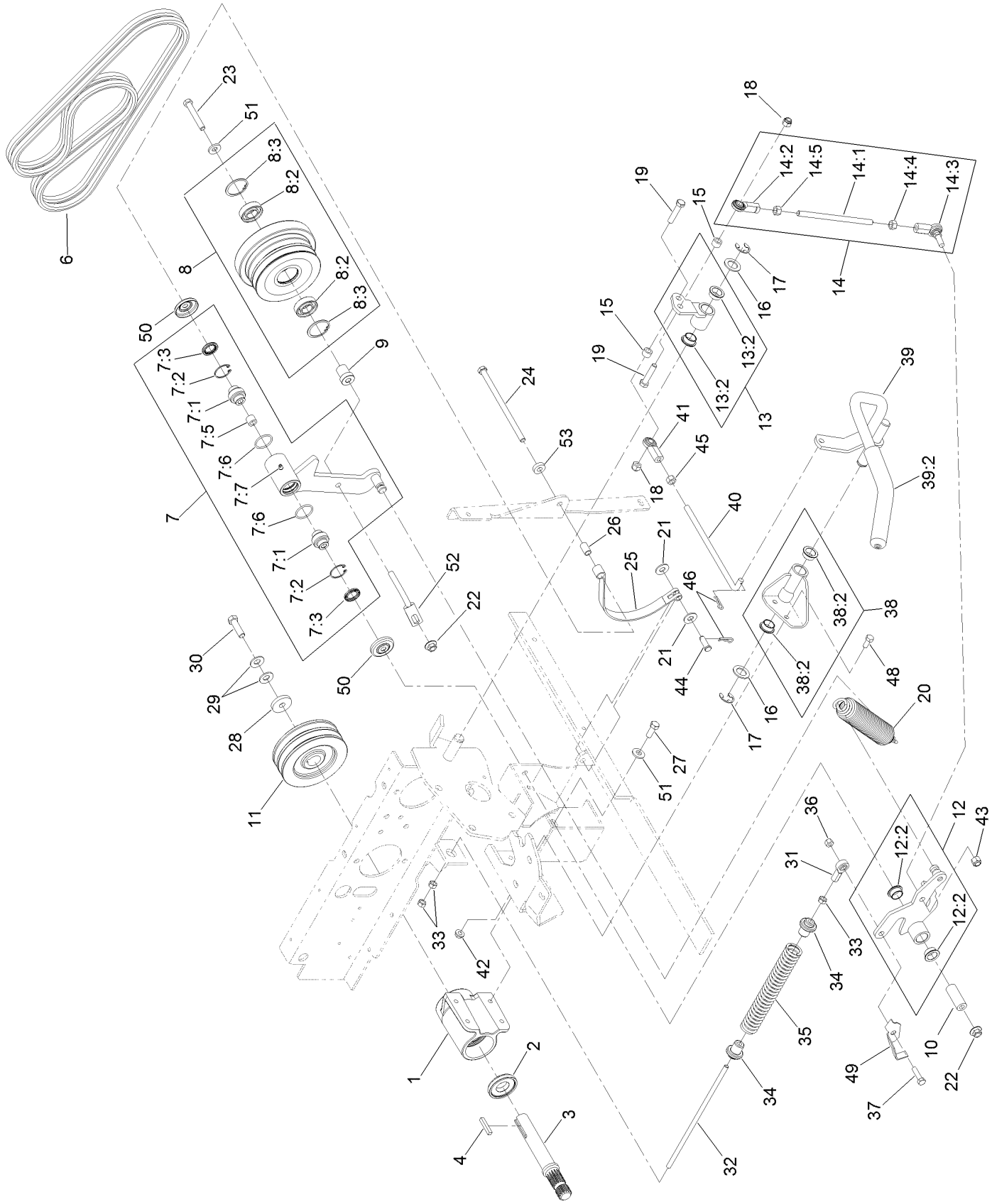

# Drive Assembly (continued)

| Ref. | Part Number | Qty. | Description |
|---|---|---|---|
| 1 | 103-2544 | 1 | Jackshaft ASM |
| 2 | 103-2535 | 1 | Spacer-Guard, Bottom |
| 3 | 103-6735 | 1 | Jackshaft |
| 4 | 67-7490 | 1 | Key-Square |
| 6 | 130-2870 | 1 | Belts-Pair, Matched |
| 7 | 103-8253 | 1 | Idler Pivot ASM |
| 7:1 | 103-3504 | 2 | Bearing-Spherical |
| 7:2 | 32120-10 | 2 | Ring-Snap |
| 7:3 | 103-3506 | 2 | Seal-Lip, Single |
| 7:5 | 1-413088 | 1 | Bushing-Lever, Lift |
| 7:6 | 106-7159 | 2 | O-Ring |
| 7:7 | 302-19 | 1 | Fitting-Grease |
| 8 | 103-9439 | 1 | Idler Sheave ASM |
| 8:2 | 251-347 | 2 | Bearing-Ball |
| 8:3 | 32151-13 | 2 | Ring-Retaining |
| 9 | 103-7350 | 1 | Spacer-Idler |
| 10 | 103-7382 | 1 | Bushing |
| 11 | 103-6732 | 1 | Sheave |
| 12 | 103-9296 | 1 | Arm ASM |
| 12:2 | 108519 | 2 | Bushing-Bronze |
| 13 | 103-9297 | 1 | Arm ASM |
| 13:2 | 108519 | 2 | Bushing-Bronze |
| 14 | 103-7392 | 1 | Clutch Link ASM |
| 14:1 | 103-7393 | 1 | Rod-Linkage |
| 14:2 | 103-1167 | 1 | Joint-Ball End, LH |
| 14:3 | 103-7994 | 1 | Balljoint-RH |
| 14:4 | 3219-3 | 1 | Nut-Hex |
| 14:5 | 3219-20 | 1 | Nut-Hex, LH |
| 15 | 92-9025 | 2 | Spacer |
| 16 | 1-303007 | 2 | Washer |
| 17 | 32151-48 | 2 | E-Ring |
| 18 | 3296-39 | 2 | Nut-Lock, NI |
| 19 | 323-9 | 2 | Screw-HH |
| 20 | 109-0148 | 1 | Spring-Extension |

| Ref. | Part Number | Qty. | Description |
|---|---|---|---|
| 21 | 3256-4 | 2 | Washer-Flat |
| 22 | 32128-19 | 2 | Nut-HF |
| 23 | 323-12 | 1 | Screw-HH |
| 24 | 323-36 | 1 | Screw-HH |
| 25 | 103-7697 | 1 | Band-Brake |
| 26 | 103-9816 | 1 | Spacer |
| 27 | 323-6 | 4 | Screw-HH |
| 28 | 1-543610 | 1 | Washer-Clutch |
| 29 | 1-603610 | 2 | Washer-Spring |
| 30 | 3212-6 | 1 | Screw-HH |
| 31 | 1-543017 | 1 | Balljoint-RH |
| 32 | 103-7996 | 1 | Linkage-Rod, PTO Brake |
| 33 | 3219-2 | 3 | Nut-Hex |
| 34 | 103-8254 | 2 | Bushing-Spring |
| 35 | 103-7997 | 1 | Spring-Brake |
| 36 | 3296-29 | 1 | Nut-Lock, NI |
| 37 | 322-6 | 1 | Screw-HH |
| 38 | 103-9295 | 1 | Pivot ASM |
| 38:2 | 108519 | 2 | Bushing-Bronze |
| 39 | 103-9486 | 1 | PTO Handle ASM |
| 39:2 | 103-8153 | 1 | Grip-Lever, Control |
| 40 | 103-8277 | 1 | Link-Handle |
| 41 | 103-0608 | 1 | Joint-Ball, End |
| 42 | 32128-20 | 2 | Nut-HF |
| 43 | 3296-6 | 1 | Nut-Lock |
| 44 | 283-2 | 1 | Pin-Clevis |
| 45 | 3219-3 | 1 | Nut-Hex |
| 46 | 1-806003 | 2 | Pin-Cotter |
| 48 | 322-3 | 2 | Screw-HH |
| 49 | 103-8716-03 | 1 | Switch-Flag |
| 50 | 103-2916 | 2 | Guard-Top |
| 51 | 98-5975 | 5 | Washer-Belleville |
| 52 | 109-5491 | 1 | Guide-Belt |
| 53 | 5-0652 | 1 | Spacer |

# Deck Mounting Assembly

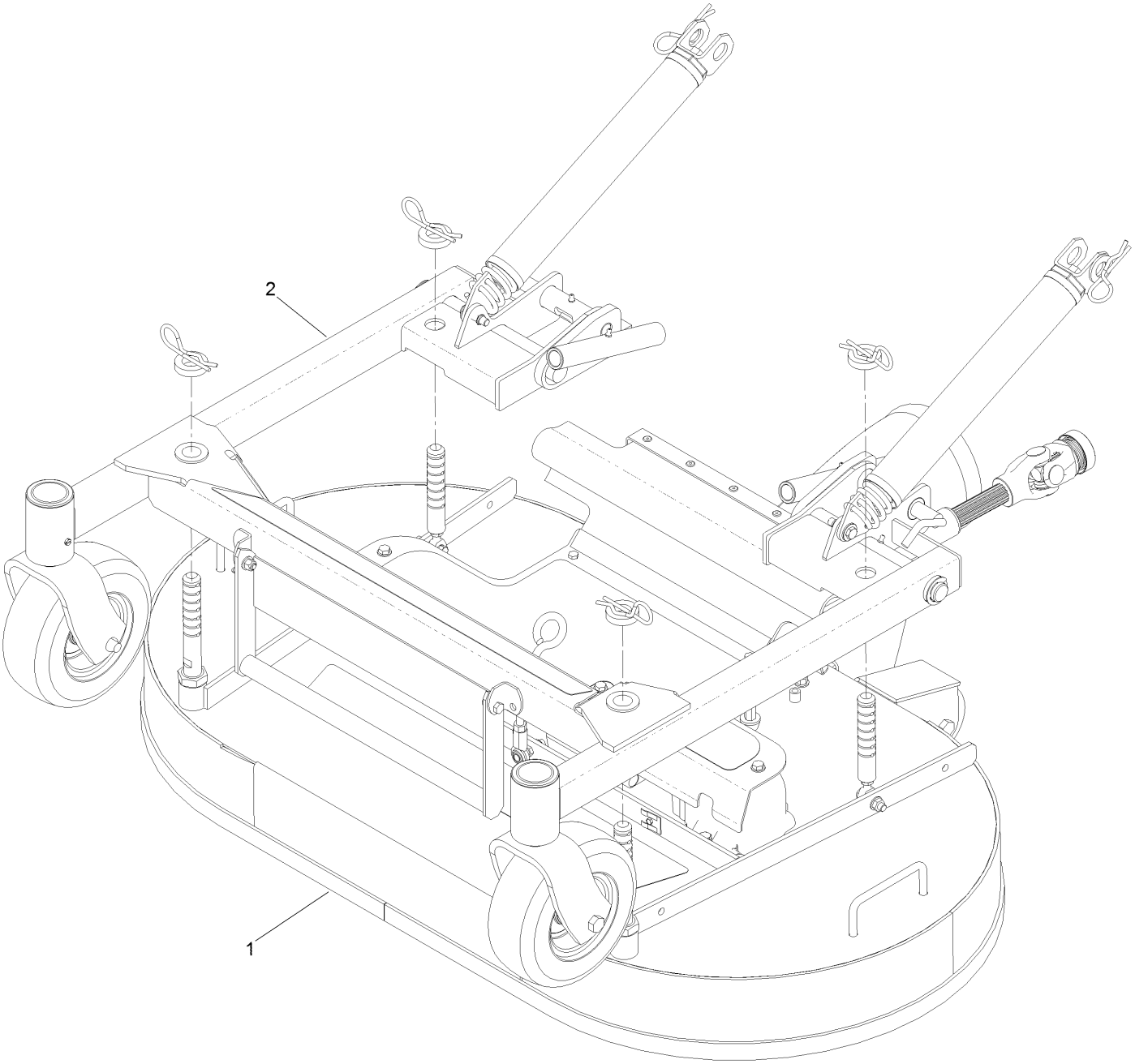

# Deck Mounting Assembly (continued)

| Ref. | Part Number | Qty. | Description |
|---|---|---|---|
| 1 | 130-2890 | 1 | Deck ASM |
| 2 | 130-2892 | 1 | Deck Frame Support ASM |

# Deck, Gearbox and Driveshaft Mounting Assembly

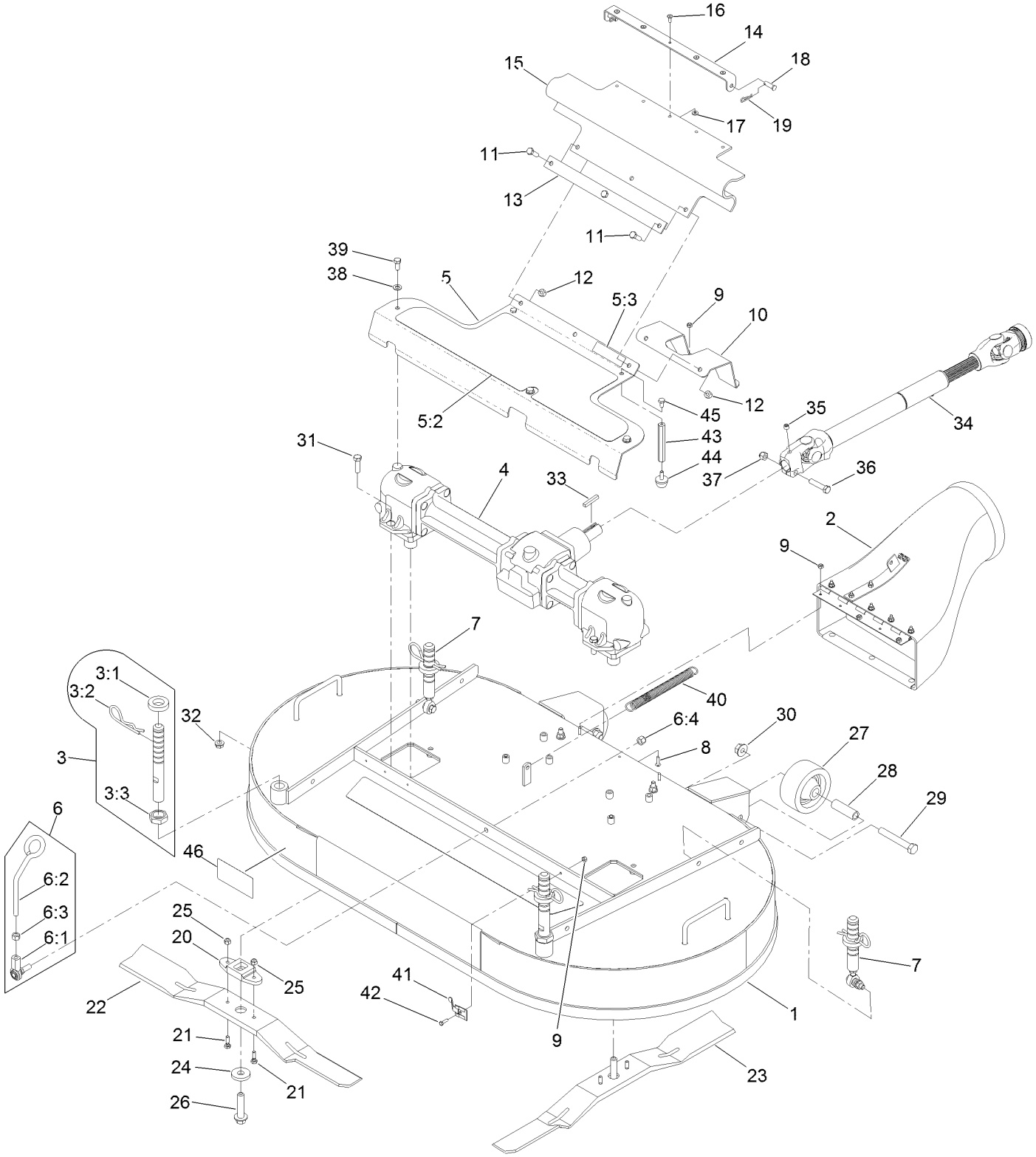

# Deck, Gearbox and Driveshaft Mounting Assembly (continued)

| Ref. | Part Number | Qty. | Description |
|---|---|---|---|
| 1 | 109-4373 | 1 | Deck ASM |
| 2 | 103-9487 | 1 | Discharge Tube ASM |
| 3 | 109-0321 | 2 | Front Deck Height Adjust ASM |
| 3:1 | 1-413425 | 1 | Spacer-Deck Support |
| 3:2 | 103-7353 | 1 | Pin-Cut Height |
| 3:3 | 103-8496 | 1 | Nut-Jam |
| 4 | 103-3460 | 1 | Gearbox ASM |
| 5 | 130-2894 | 1 | Gearbox Cover ASM |
| 5:2 | 103-8626 | 1 | Pad-Anti Skid |
| 5:3 | 119-0217 | 1 | Decal-Danger |
| 6 | 103-8363 | 1 | Deck Latch ASM |
| 6:1 | 103-7994 | 1 | Balljoint-RH |
| 6:2 | 103-8307 | 1 | Latch-Deck |
| 6:3 | 3219-3 | 1 | Nut-Hex |
| 6:4 | 3296-6 | 1 | Nut-Lock |
| 7 | 109-0322 | 2 | Rear Deck Height Adjust ASM |
| 8 | 1-803075 | 3 | Screw-Head, Truss |
| 9 | 3296-2 | 6 | Nut-Lock, NI |
| 10 | 116-7842-01 | 1 | Guard-Drive Shaft |
| 11 | 322-5 | 3 | Screw-HH |
| 12 | 3296-29 | 3 | Nut-Lock, NI |
| 13 | 103-6290-03 | 1 | Strap-Drive, Line Cover |
| 14 | 103-6183-03 | 1 | Bracket-Guard, PTO |
| 15 | 103-5979 | 1 | Guard-PTO |
| 16 | 114439 | 5 | Rivet-Pop |
| 17 | 3256-14 | 5 | Washer-Flat |
| 18 | 1-808280 | 2 | Pin-Clevis |
| 19 | 1-806003 | 2 | Pin-Cotter |
| 20 | 103-7705 | 2 | Driver-Blade |
| 21 | 99-0283 | 4 | Bolt-Shear |
| 22 | 130-2859 | 1 | Blade-22In, RH |
| 23 | 130-2860 | 1 | Blade-22In, LH |
| 24 | 30-8770 | 2 | Washer |
| 25 | 3296-42 | 4 | Nut-Lock, NI |
| 26 | 92-5816 | 2 | Bolt-Blade |
| 27 | 103-3700 | 2 | Roller-Deck |
| 28 | 103-4230 | 2 | Spacer-Roller |
| 29 | 325-14 | 2 | Screw-HH |
| 30 | 32128-49 | 2 | Nut-HHF |
| 31 | 323-7 | 4 | Screw-HH |
| 32 | 3290-357 | 4 | Nut-HHF, Whiz |
| 33 | 67-7490 | 1 | Key-Square |
| 34 | 103-9485 | 1 | Drive Shaft ASM |
| 35 | 3247-2 | 1 | Screw-Set, HSH |
| 36 | 323-9 | 1 | Screw-HH |
| 37 | 3296-39 | 1 | Nut-Lock, NI |
| 38 | 3256-23 | 3 | Washer-Flat |
| 39 | 322-3 | 3 | Screw-HH |
| 40 | 103-8841 | 1 | Spring-Extension |
| 41 | 1-513690 | 1 | Clip-Deck, Hold Up Rod |
| 42 | 3290-134 | 1 | Screw |
| 43 | 103-8610 | 2 | Stand-Off |
| 44 | 1-523420 | 2 | Bumper |
| 45 | 321-2 | 2 | Screw-HH |
| 46 | 130-2888 | 1 | Decal |

# Deck Decal Assembly No. 109-4373

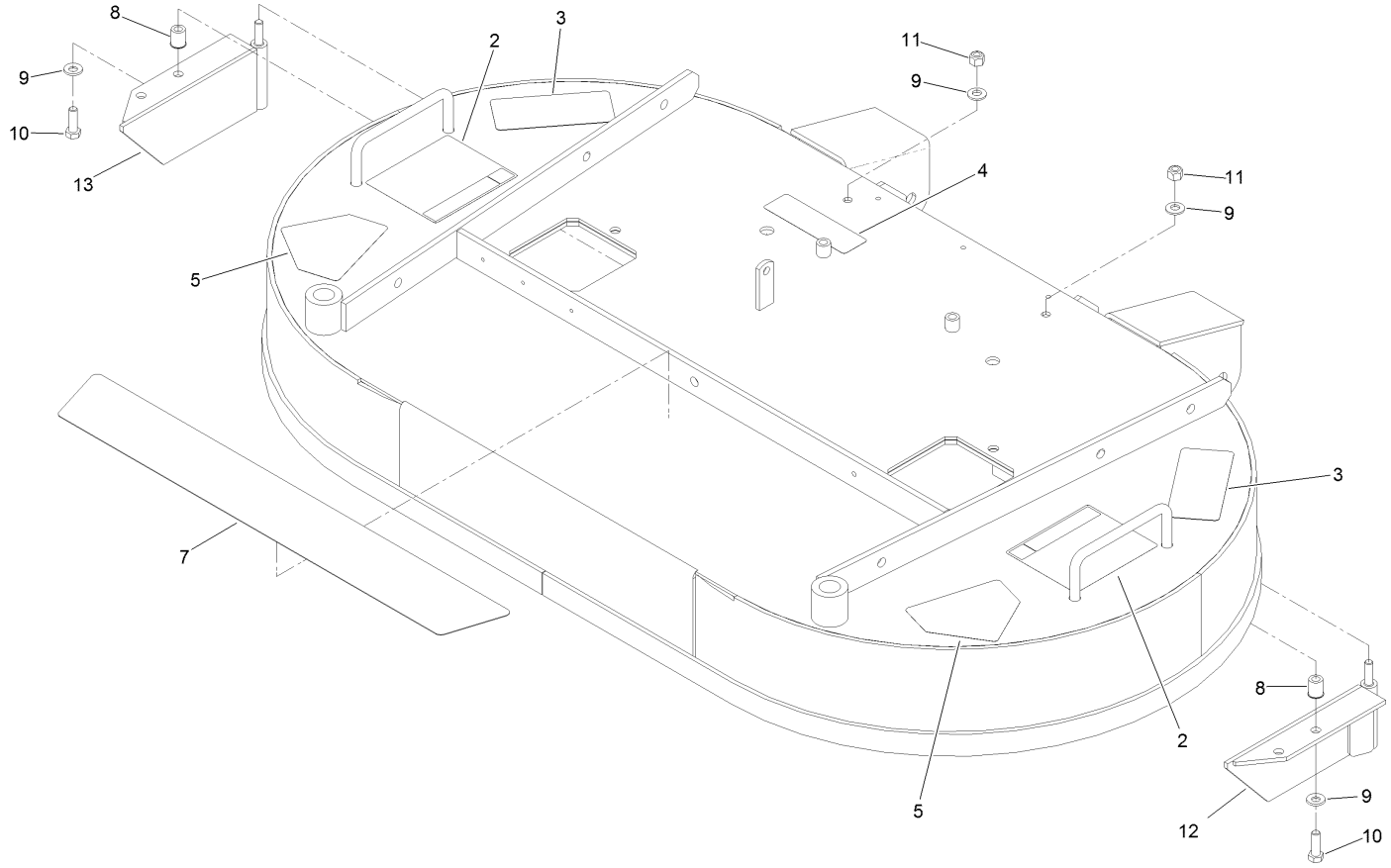

# Deck Decal Assembly No. 109-4373 (continued)

| Ref. | Part Number | Qty. | Description |
|---|---|---|---|
| 2 | 116-8934 | 2 | Decal-Height Adjust, Cutting |
| 3 | 93-7818 | 2 | Decal-Torque, Blade Bolt |
| 4 | 112-9028 | 1 | Decal-Missing, Cover |
| 5 | 112-8760 | 2 | Decal-Danger |
| 7 | 103-8667 | 1 | Pad-Anti Skid |
| 8 | 32148-7 | 4 | Nut-Insert |
| 9 | 1-303334 | 4 | Washer-Spring |
| 10 | 322-5 | 2 | Screw-HH |
| 11 | 3296-29 | 2 | Nut-Lock, NI |
| 12 | 109-4053-01 | 1 | Baffle-LH |
| 13 | 109-4054-01 | 1 | Baffle-RH |

# Discharge Tube Assembly No. 103-9487

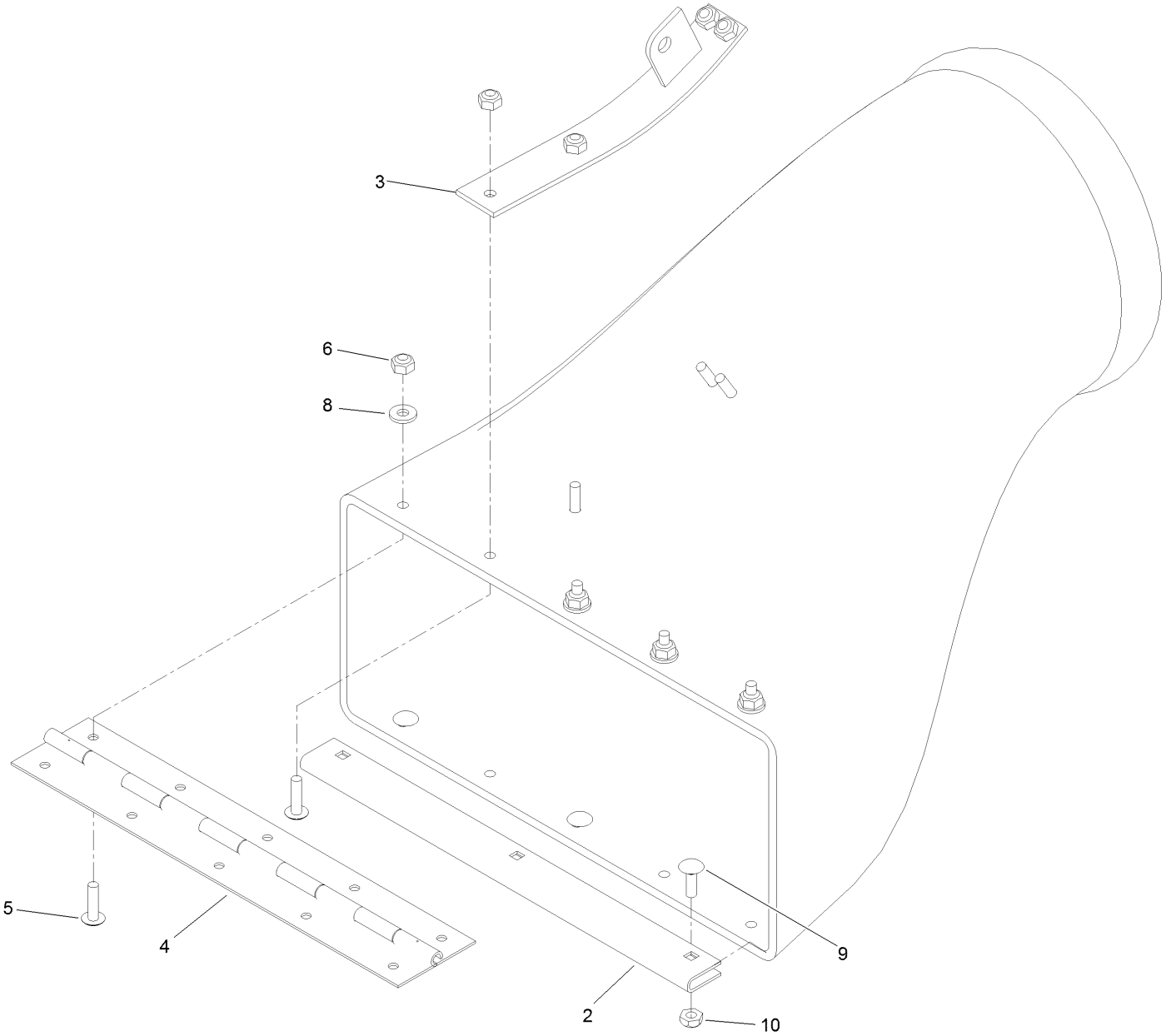

# Discharge Tube Assembly No. 103-9487 (continued)

| Ref. | Part Number | Qty. | Description |
|---|---|---|---|
| 2 | 109-2228-03 | 1 | Guard-Plenum |
| 3 | 103-5868-01 | 1 | Mount-Spring |
| 4 | 103-4974 | 1 | Hinge-Piano |
| 5 | 1-803075 | 8 | Screw-Head, Truss |
| 6 | 3296-2 | 8 | Nut-Lock, NI |
| 8 | 3256-14 | 4 | Washer-Flat |
| 9 | 1-807533 | 3 | Bolt-CARR |
| 10 | 3296-12 | 3 | Nut-Lock, NI |

# Gearbox Assembly No. 103-3460

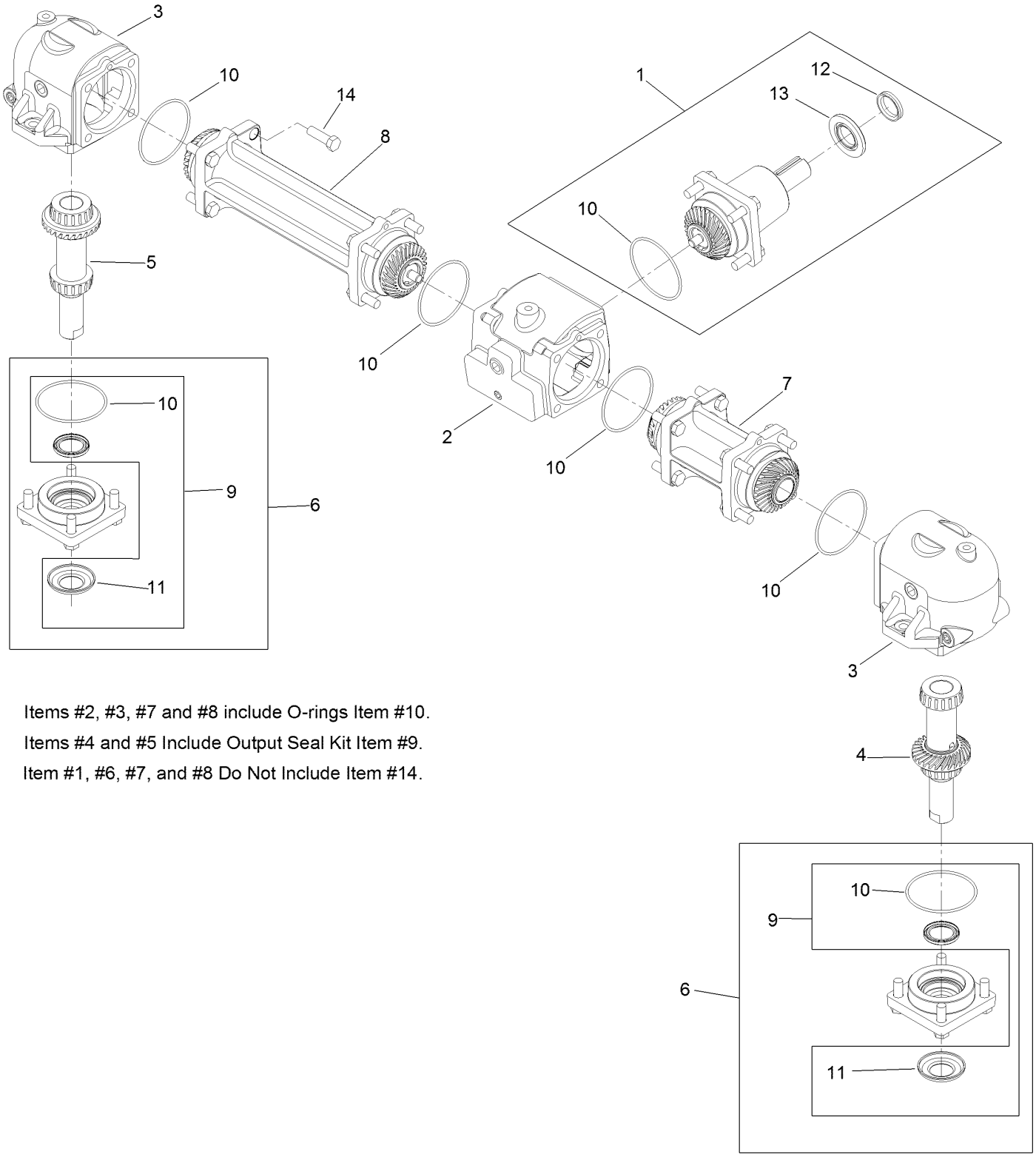


Items #2, #3, #7 and #8 include O-rings Item #10.

Items #4 and #5 Include Output Seal Kit Item #9.

Item #1, #6, #7, and #8 Do Not Include Item #14.

# Gearbox Assembly No. 103-3460 (continued)

| Ref. | Part Number | Qty. | Description |
|---|---|---|---|
| 1 | 109-0188 | 1 | Input Pinion ASM |
| 2 | 109-0190 | 1 | Housing-Center |
| 3 | 109-0191 | 1 | Housing-End |
| 4 | 109-0192 | 1 | LH Output Shaft And Gear ASM |
| 5 | 109-0194 | 1 | RH Output Shaft And Gear ASM |
| 6 | 109-0196 | 1 | Cap-Output |
| 7 | 109-0197 | 1 | Tube-Connector, Short |
| 8 | 109-0199 | 1 | Tube-Connector, Long |
| 9 | 109-0201 | 1 | Output Seal Kit |
| 10 | 109-0203 | 1 | Seal-O-Ring |
| 11 | 109-0204 | 1 | Washer-Cupped |
| 12 | 109-0205 | 1 | Seal-V-Ring ● |
| 13 | 109-0202 | 1 | Seal-Input ● |
| 14 | 93-3987 | 28 | Bolt-Blade |

● Apply bead of Mobil HTS grease (P/N 103-5217 1.5 oz packet) (or a food-grade anti-seize) between input seal and v-ring.

# Rear Deck Height Adjustment
# Assembly No. 109-0322

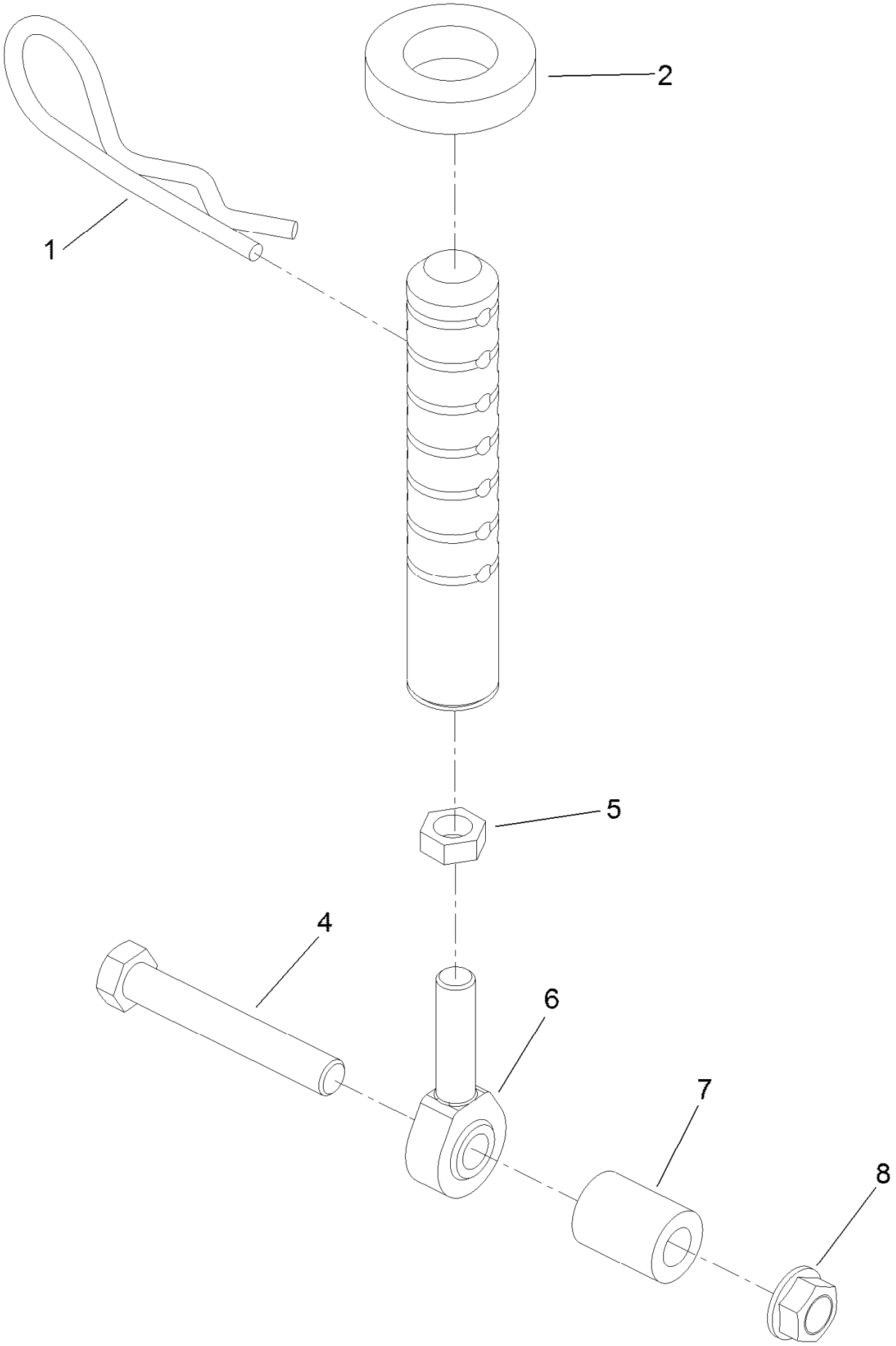

# Rear Deck Height Adjustment
# Assembly No. 109-0322 (continued)

| Ref. | Part Number | Qty. | Description |
|---|---|---|---|
| 1 | 103-7353 | 1 | Pin-Cut Height |
| 2 | 1-413425 | 1 | Spacer-Deck Support |
| 4 | 323-11 | 1 | Screw-HH |
| 5 | 3220-3 | 1 | Nut-HJ |
| 6 | 1-613204 | 1 | Balljoint |
| 7 | 106-5620 | 1 | Tube-Interlock |
| 8 | 3290-357 | 1 | Nut-HHF, Whiz |

# Drive Shaft Assembly No. 103-9485

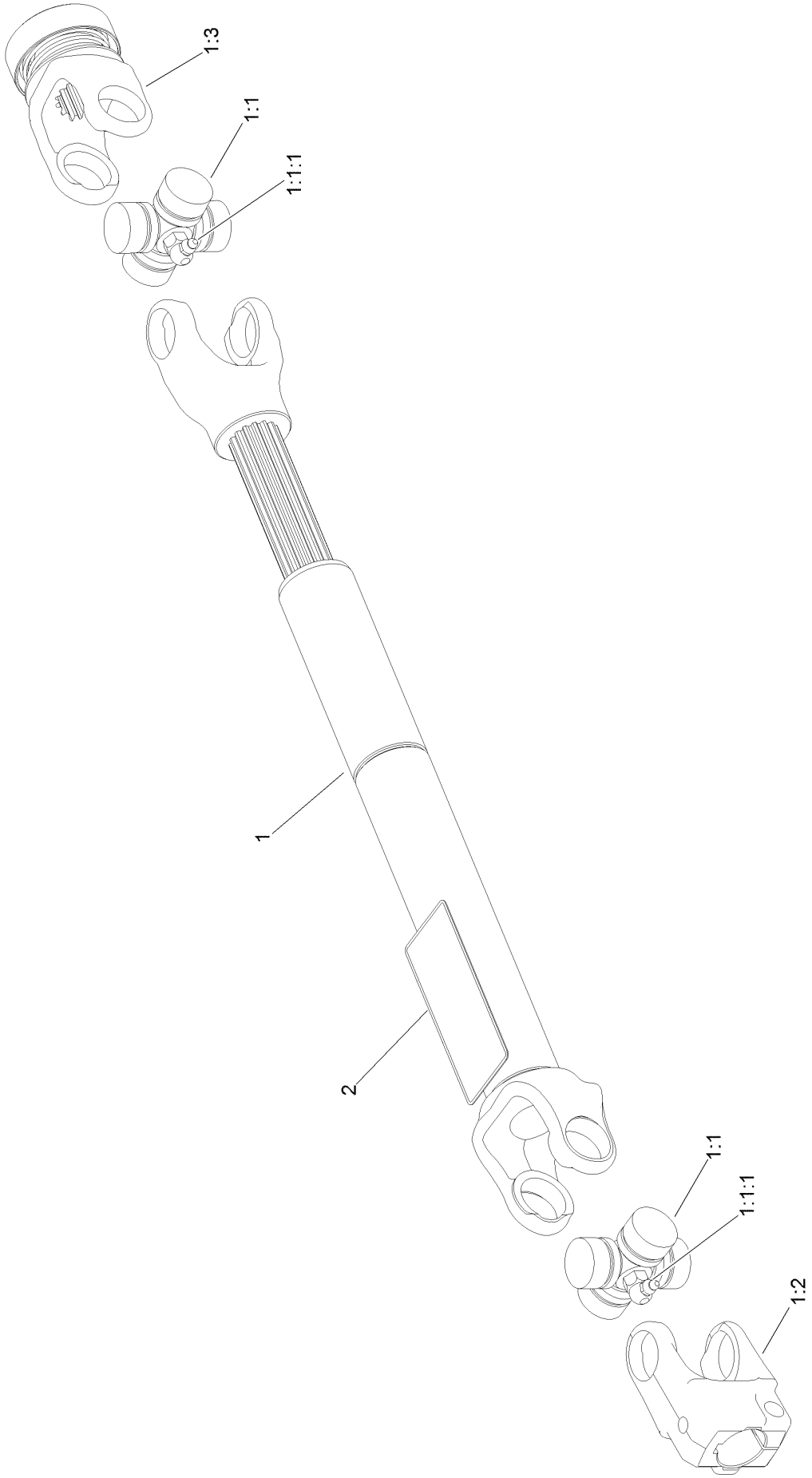

# Drive Shaft Assembly No. 103-9485 (continued)

| Ref. | Part Number | Qty. | Description |
|---|---|---|---|
| 1 | | 1 | Drive Shaft-Telescoping ● |
| 1:1 | 54-9180 | 2 | U-Joint Kit |
| 1:1:1 | 62-3820 | 1 | Fitting-Grease |
| 1:2 | 103-9328 | 1 | Yoke-Keyed |
| 1:3 | 103-9329 | 1 | Yoke-Quick Disconnect |
| 2 | 116-9049 | 1 | Decal-Danger, Driveline |

● Not serviced separately

# Deck Support Frame Assembly No. 130-2892

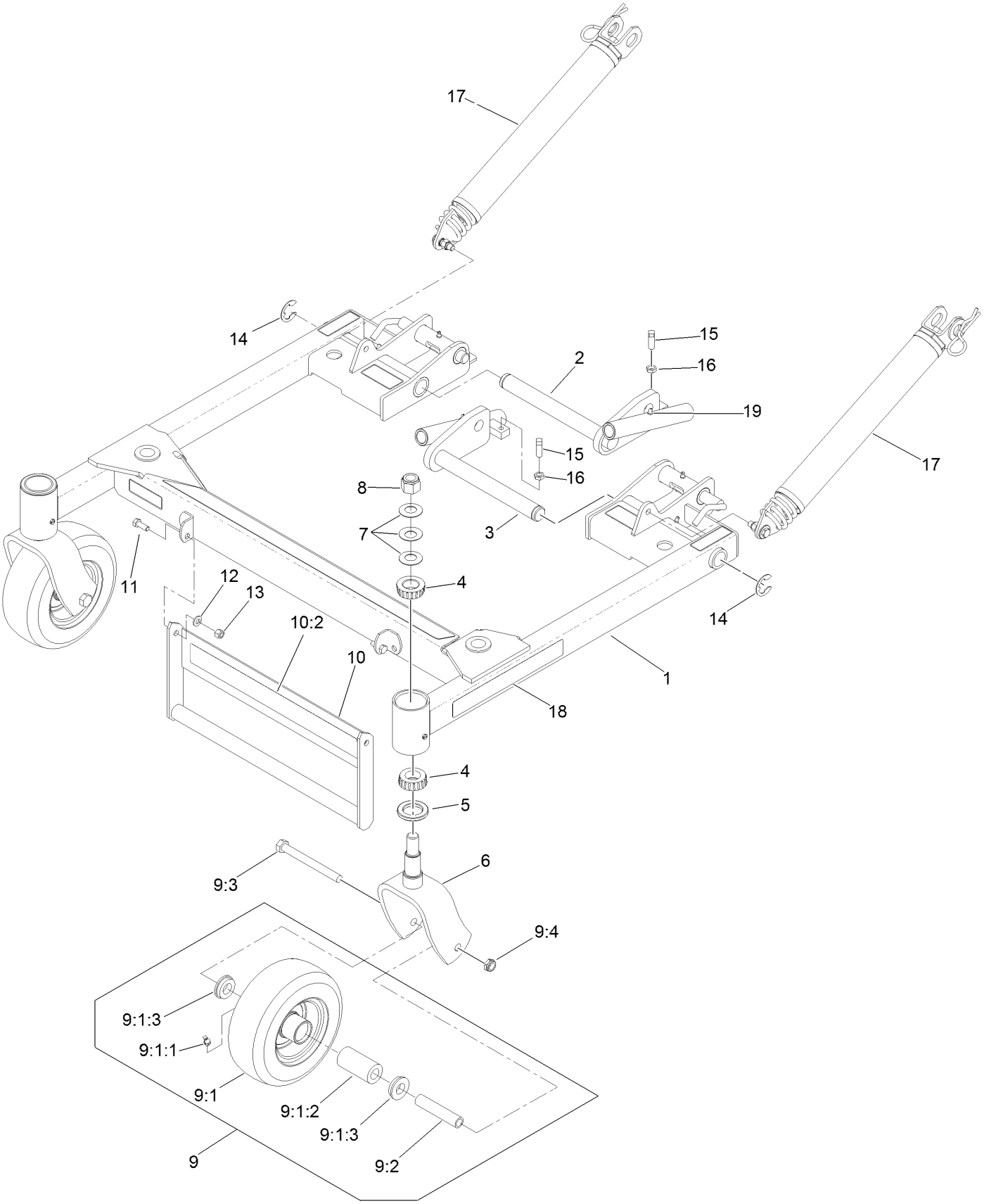

# Deck Support Frame Assembly No. 130-2892 (continued)

| Ref. | Part Number | Qty. | Description |
|---|---|---|---|
| 1 | 103-9481 | 1 | Deck Support ASM |
| 2 | 103-3729-01 | 1 | Pivot-Deck, RH |
| 3 | 103-3732-01 | 1 | Pivot-Deck, LH |
| 4 | 1-543509 | 4 | Bearing-Roller, Tapered |
| 5 | 1-543511 | 2 | Seal-Grease |
| 6 | 109-1933-01 | 2 | Fork-Caster |
| 7 | 1-633508 | 6 | Washer-Bellville |
| 8 | 3296-51 | 2 | Nut-Lock, NI |
| 9 | 130-2867 | 2 | Wheel And Axle ASM |
| 9:1 | 130-2866 | 1 | Wheel And Tire |
| 9:1:1 | 302-61 | 1 | Fitting-Grease |
| 9:1:2 | 103-4588 | 1 | Bearing-Roller, Straight |
| 9:1:3 | 1-513810 | 2 | Bushing |
| 9:2 | 109-2094 | 1 | Spacer-Caster, Front |
| 9:3 | 325-19 | 1 | Screw-HH |
| 9:4 | 3296-45 | 1 | Nut-Lock, NI |
| 10 | 130-2897 | 1 | Deck Lift Handle ASM |
| 10:2 | 130-2883 | 1 | Decal |
| 11 | 322-4 | 2 | Screw-HH |
| 12 | 1-303334 | 2 | Washer-Spring |
| 13 | 3296-29 | 2 | Nut-Lock, NI |
| 14 | 1-808519 | 2 | Ring-Snap |
| 15 | 3243-5 | 2 | Screw-Set, SQH |
| 16 | 3218-3 | 2 | Nut-Jam |
| 17 | 116-7850 | 2 | Lift Assist Spring ASM |
| 18 | 130-2884 | 2 | Decal |
| 19 | 302-19 | 2 | Fitting-Grease |

# Deck Support W/Decals Assembly No. 103-9481

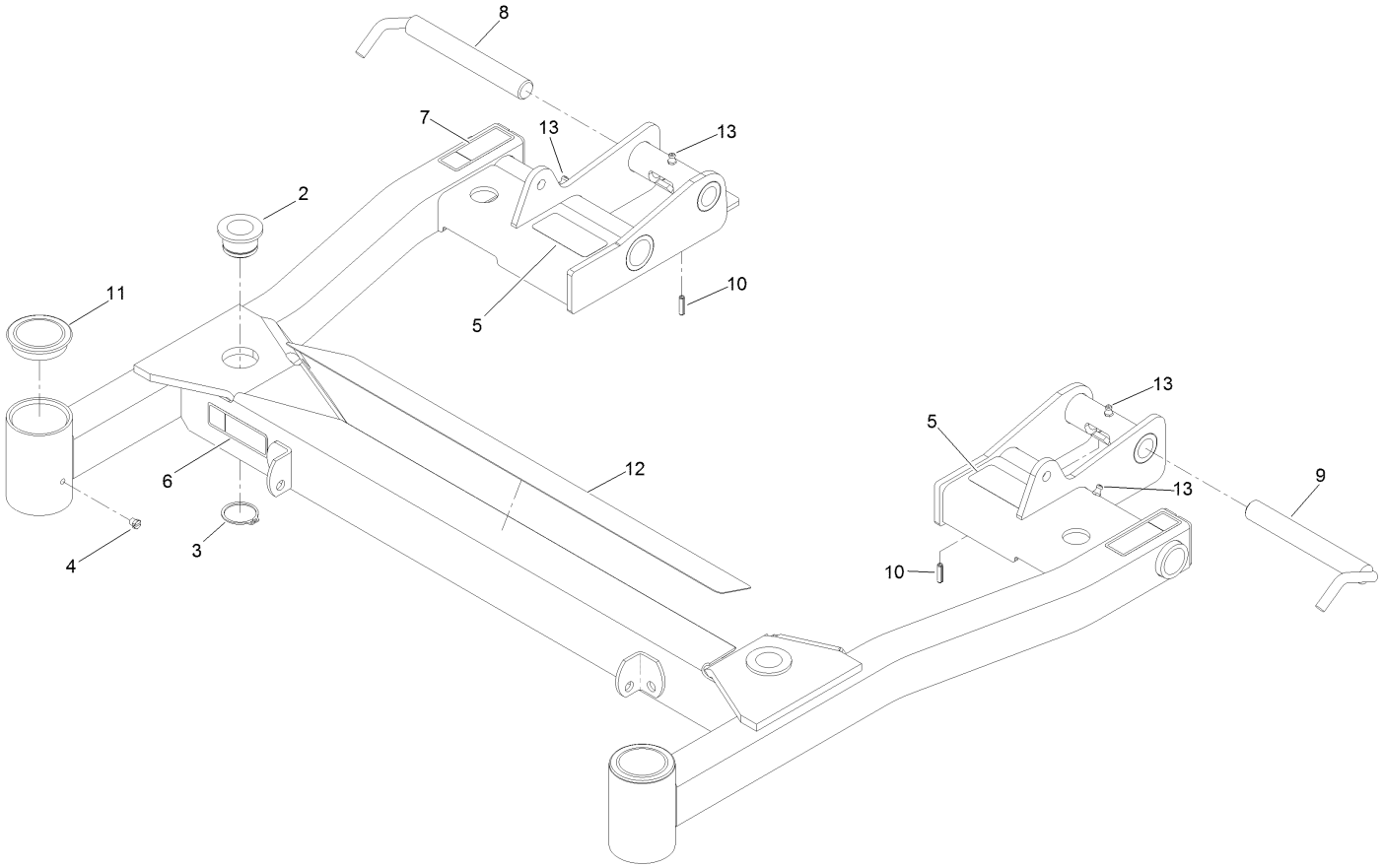

# Deck Support W/Decals Assembly No. 103-9481 (continued)

| Ref. | Part Number | Qty. | Description |
|---|---|---|---|
| 2 | 103-7436 | 2 | Bushing-Support, Deck |
| 3 | 32120-33 | 2 | Ring-Retaining |
| 4 | 1-811010 | 2 | Plug |
| 5 | 93-6696 | 2 | Decal-Warning |
| 6 | 116-8936 | 1 | Decal-Danger |
| 7 | 116-8935 | 2 | Decal-Warning, Folding Deck |
| 8 | 103-4119 | 1 | Lock-Deck, RH |
| 9 | 103-4118 | 1 | Lock-Deck, LH |
| 10 | 32121-3 | 2 | Pin-Spring |
| 11 | 103-4882 | 2 | Cap-Grease |
| 12 | 103-8667 | 1 | Pad-Anti Skid |
| 13 | 302-19 | 4 | Fitting-Grease |

# Spring Lift Assist Assembly No. 116-7850

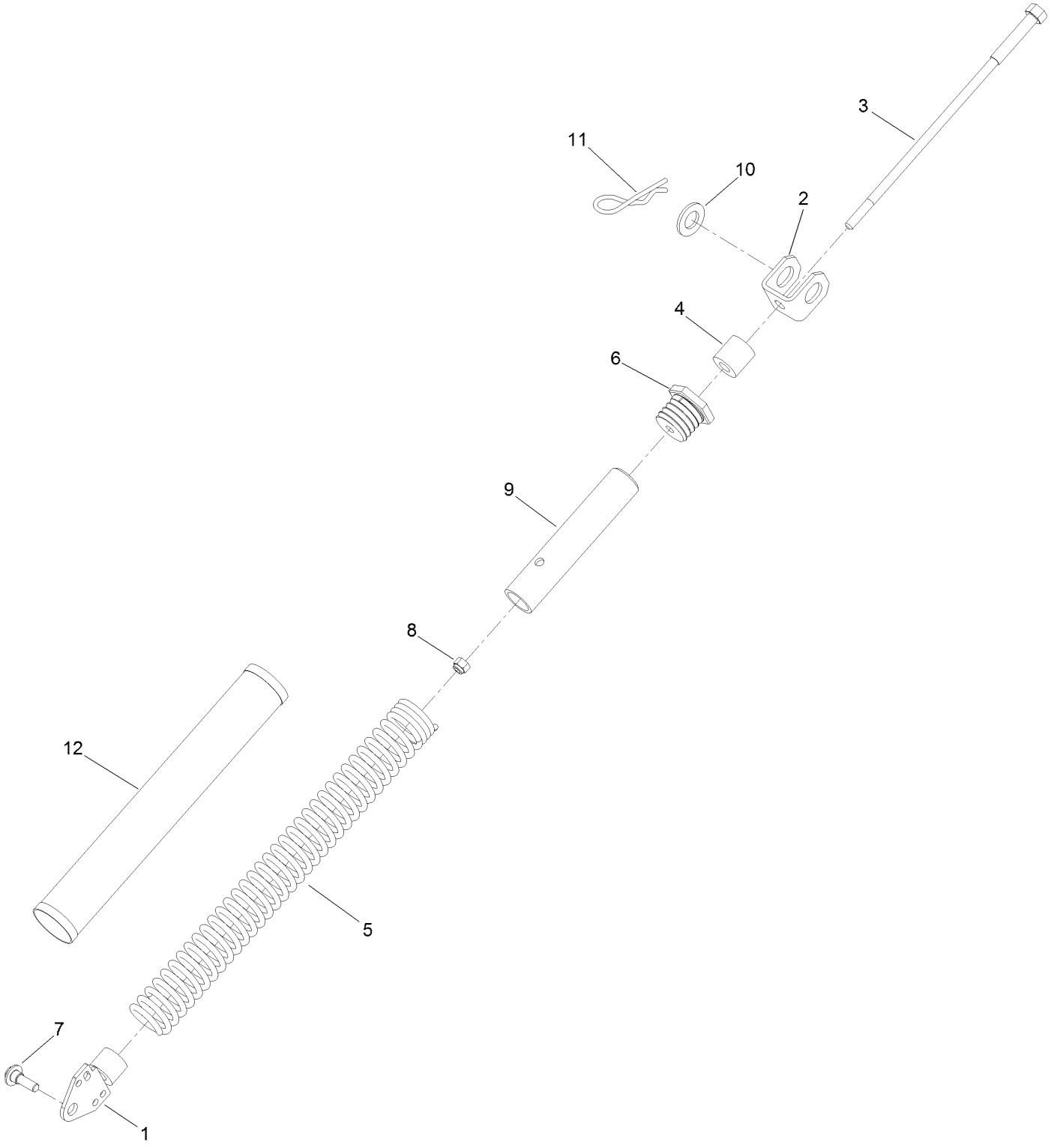

# Spring Lift Assist Assembly No. 116-7850 (continued)

| Ref. | Part Number | Qty. | Description |
|---|---|---|---|
| 1 | 103-4284 | 1 | Tensioner-Spring |
| 2 | 103-4285 | 1 | Mount-Lift Assist, Deck |
| 3 | 103-3773 | 1 | Shaft-Adjustment, Spring |
| 4 | 109-1978 | 1 | Spacer |
| 5 | 103-4281 | 1 | Spring-Extension |
| 6 | 103-3772 | 1 | Plug-Adjuster, Spring |
| 7 | 614672 | 1 | Bolt-Shoulder |
| 8 | 3296-39 | 2 | Nut-Lock, NI |
| 9 | 103-7865 | 1 | Spring-Tube |
| 10 | 3256-28 | 1 | Washer-Flat |
| 11 | 103-7353 | 1 | Pin-Cut Height |
| 12 | 103-7971 | 1 | Cover-Spring, Deck |

# Attachments and Accessories

## For 74315 Z Master 8000 Series Riding Mower with 42in Cutting Unit

| Product Name | Model/Part |
|---|---|
| Mulch Kit | 130-8460 |
| 22in LH Mulching Blade | 130-8461 |
| 22in RH Mulching Blade | 130-8462 |
| Light Kit | 130-8469 |
| Automatic Door Opener Kit | 130-8470 |
| Hopper Power Dump Kit | 130-8458 |
| Suspension Seat Kit | 130-8471 |
| Removable Grass Tubs Kit | 130-8457 |
| Dual Split Caster Kit | 130-8455 |
| Hypr-Oil 500 (quart) | 114-4713 |
| ROPS Kit | 130-8459 |
| Hypr-Oil 500 (gallon) | 114-4714 |
| Winter Hydraulic Filter | 1-633752 |
| Hypr-Oil 500-5 (5 gallon) | 114-4715 |
| MVP Kit | 130-8467 |
| ROPS Pin Kit | 126-1339 |

**Notes:**

TORO®

Count on it.