Form No. 3411-761 Rev A

TORO®

Count on it.

Parts Catalog

Z Master® Professional 6000 Series Riding Mower

with 152cm TURBO FORCE® Rear Discharge Mower

Model No. 74942TE—Serial No. 400000000 and Up

Register at www.Toro.com.
Original Instructions (EN)

CE

3411-761 A

Ordering Replacement Parts

To order replacement parts, please supply the part number, the quantity, and the description of each part desired.

Understanding Reference Numbers

Each identified part in an illustration has a reference number. The reference number for a part also appears in the parts list, along with other information about the part.

This catalog uses two special reference number formats, one to indicate parts in a service assembly and another to indicate the quantity of a given part in an illustration.

Service Assembly Reference Numbers

Parts in service assemblies have reference numbers in the form a:b. The a represents the reference number of the entire service assembly and the b represents a sequential number unique to each part within the service assembly.

For example, a wheel assembly might be identified by reference number 6, the tire by 6:1, the valve by 6:2, and the wheel by 6:3. When you order the assembly identified by reference number 6, you receive all parts identified by reference numbers 6:1,6:2, and 6:3. However, you may also order any part individually. Reference numbers of this type appear in illustration and in parts lists.

Reference Numbers Indicating Quantity

In an illustration, if a reference number indicates more than one part, the reference number has the form nX y. The n represents the quantity of the part, the X is the multiplication symbol, and the y represents the reference number.

For example, in an illustration, the reference number 2X 37 means that two of the parts identified by reference number 37 are indicated.

Contents

Frame Assembly 4
Caster Wheel and Fork Assembly 6
Hydraulic Drive Assembly 8
Pump Idler Assembly No. 116-1255 10
LH Hydro Assembly No. 126-1325 12
RH Hydro Assembly No. 126-1326 14
Rear Wheel Assembly 16
Park Brake Assembly 18
Fuel System Assembly 20
Fuel Tank Assembly No. 135-0643 22
Seat Mounting Assembly 24
Seat Assembly No. 125-3107 26
Motion Control Assembly 28
Console and Control Assembly 30
RH Console Assembly No. 115-7400 32
LH Console Assembly No. 115-7401 34
Electrical Assembly 36
Deck Lift Assembly 38
Height-of-Cut Assembly No. 117-3842 40
Engine, Clutch and Muffler Assembly 42
Rear Discharge Tunnel Assembly 44
Discharge Tunnel Assembly No. 126-4930 46
Deck Assembly 48
Deck Decal Assembly No. 136-8629 50
Spindle Assembly No. 127-0560 52
LH Spindle Assembly No. 127-0570 54
Idler Assembly No. 126-0853 56
Deck Idler Assembly No. 126-1720 58
Frame Decal Assembly 60
Attachments and Accessories 62

© 2017—The Toro® Company
8111 Lyndale Avenue South
Bloomington, MN 55420

Contact us at www.Toro.com.
Printed in the USA.
All Rights Reserved

Frame Assembly

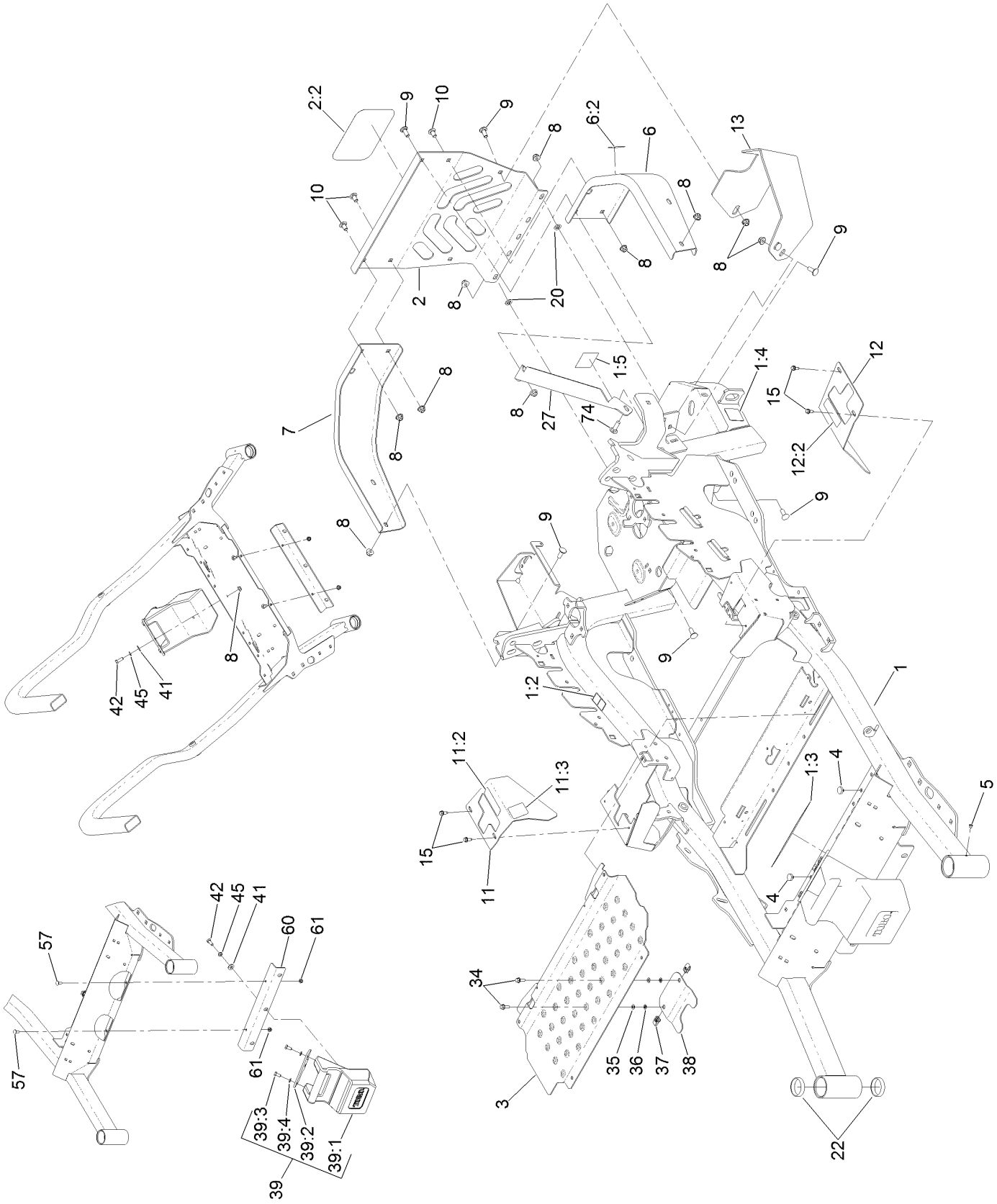

Frame Assembly (continued)

Ref.	Part Number	Qty.	Description
1	116-9720	1	Mainframe ASM
1:2	106-5517	2	Decal-Warning
1:3	132-0871	1	Decal-Danger
1:4	106-2655	2	Decal-Hazard, Pinched Finger
1:5	116-4858	1	Decal-Spark Arrester
2	115-7410	1	Rear Guard ASM
2:2	67-7320	1	Decal
3	116-8898-01	1	Floorpan
4	1-513658	2	Bumper
5	1-811010	2	Plug
6	116-0180	1	LH Bumper ASM
6:2	106-5517	1	Decal-Warning
7	116-0057-03	1	Bumper-RH
8	104-8301	12	Nut-HF, NI
9	3231-22	7	Screw-CARR
10	3231-21	3	Screw-CARR
11	116-5899	1	RH Motion Control Cover ASM
11:2	99-8936	1	Decal-Control, Motion
11:3	116-5988	1	Decal-Park Brake, CE
12	116-0580	1	LH Motion Control Cover ASM
12:2	99-8936	1	Decal-Control, Motion
13	117-0908-03	1	Guard-Muffler
15	32144-10	4	Screw-HWH
20	107-3154	2	Nut-Push
22	1-543508	4	Cup-Bearing
27	127-0324-03	1	Strap
34	3234-4	2	Screw-HHF
35	3256-60	2	Washer-Flat
36	106-8737	2	Nut-Retainer
37	107069	2	Clip
38	119-0395-03	1	Adapter-Captive
39	120-7885	1	Weight ASM
39:1	120-7881	1	Weight-43 Lb
39:2	115-3616-01	1	Tab-Support, Weight
39:3	323-4	2	Screw-HH
39:4	3253-5	2	Washer-Lock
41	3256-4	2	Washer-Flat
42	323-6	2	Screw-HH
45	3253-5	2	Washer-Lock
57	3230-23	2	Screw-CARR
60	115-3615-01	1	Bracket-Mount, Weight
61	104-8300	2	Nut-HF, NI
74	3231-25	1	Bolt-CARR

Caster Wheel and Fork Assembly

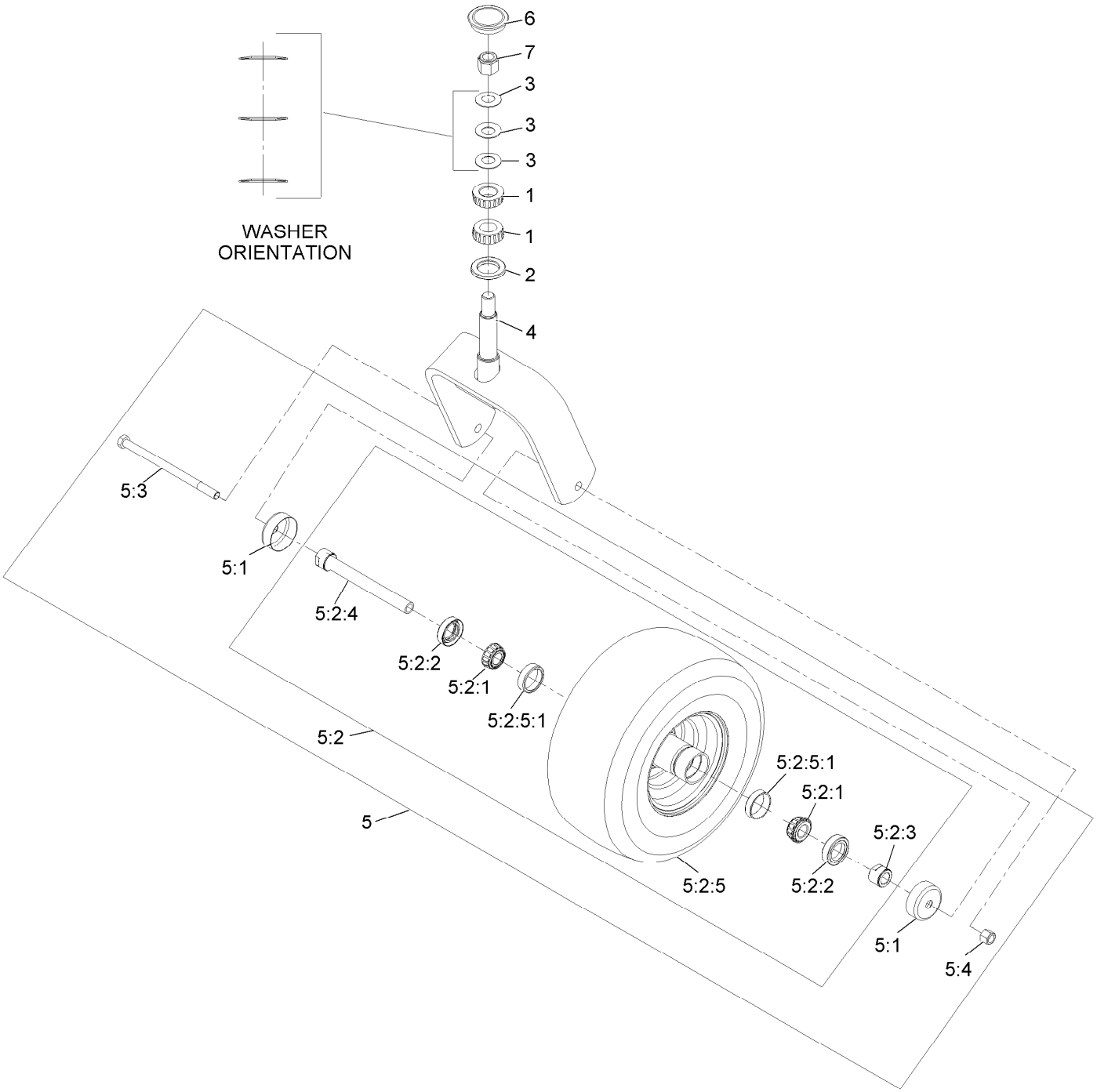

Caster Wheel and Fork Assembly (continued)

Ref.	Part Number	Qty.	Description
1	1-543509	2	Bearing-Roller, Tapered
2	116-5647	1	Seal-Grease
3	1-633508	3	Washer-Bellville
4	116-6707-01	1	Caster
5	109-9127	1	Wheel & Tire ASM
5:1	103-2768	2	Guard-Seal
5:2		1	Wheel And Tire ASM ●
5:2:1	1-633585	2	Bearing-Cone, Taper
5:2:2	103-0063	2	Seal-Caster
5:2:3	103-3051	1	Spacer-Nut ■
5:2:4	126-5361	1	Axle Caster ASM
5:2:5		1	Wheel And Tire ASM ●
5:2:5:1	1-633584	2	Bearing-Cup
5:3	325-39	1	Screw-HH
5:4	3296-23	1	Nut-Lock, NI
6	103-4882	1	Cap-Grease
7	3296-51	1	Nut-Lock, NI

● Not serviced separately
■ Use Pro-Lock, Nut Type (P/N 1-840022, .5ml tube) on threads.

Hydraulic Drive Assembly

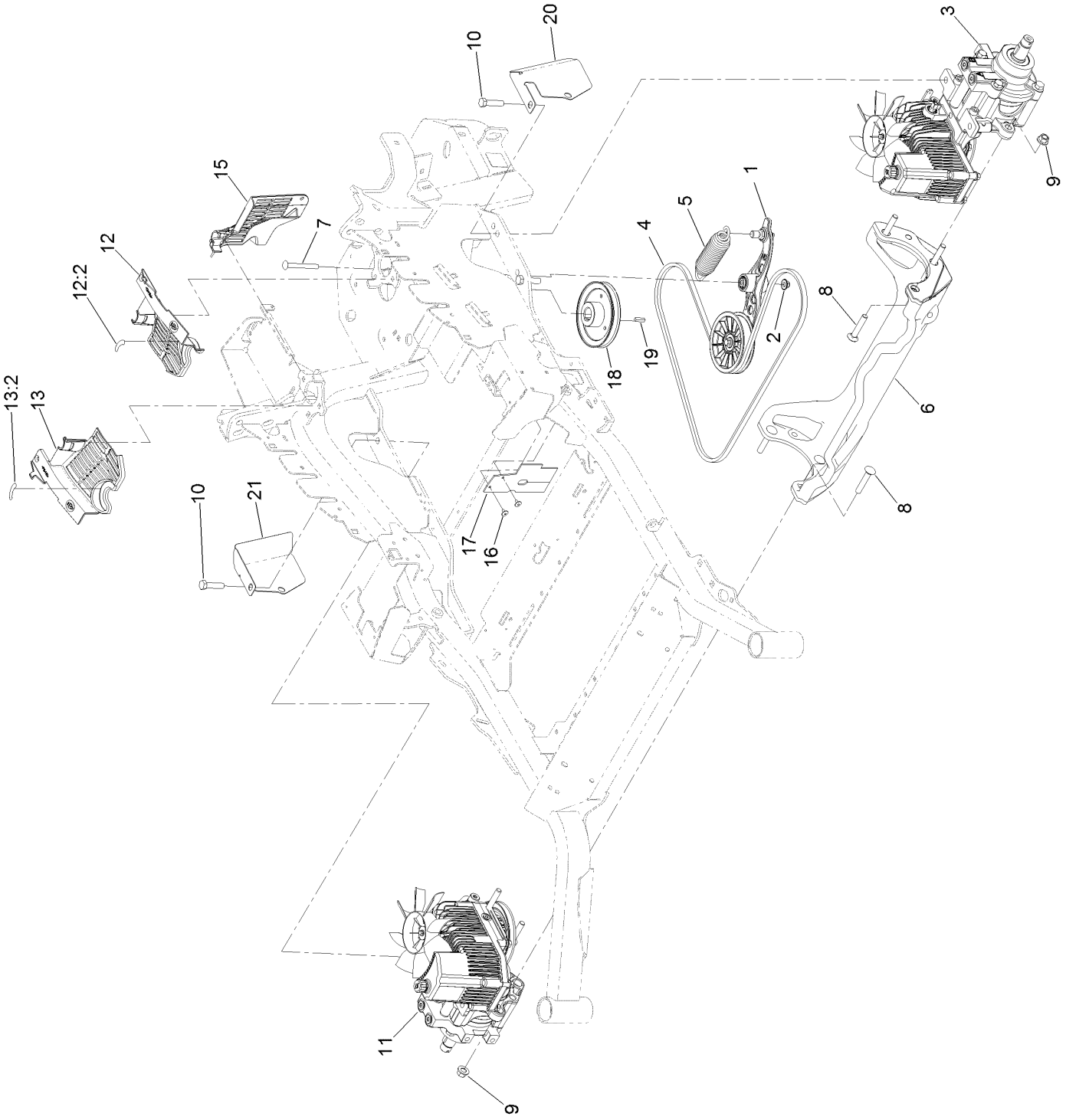

Hydraulic Drive Assembly (continued)

Ref.	Part Number	Qty.	Description
1	116-1255	1	Pump Idler ASM
2	109-6658	1	Nut-Flange, NI
3	126-1325	1	LH Hydro ASM (16Cc W/ Shock)
4	109-3388	1	Belt
5	116-6317	1	Spring-Extension
6	116-7558	1	Cradle-Hydro
7	116-1502	1	Bolt-Shoulder, Carriage
8	126-0095	6	Screw-CARR
9	99-5107	6	Nut-Lock
10	325-8	4	Screw-HH
11	126-1326	1	RH Hydro ASM (16Cc W/ Shock)
12	116-0170	1	LH Hydro Guard ASM
12:2	116-8726	1	Decal-Oil, Hydro
13	116-0171	1	RH Hydro Guard ASM
13:2	116-8726	1	Decal-Oil, Hydro
15	109-9058	1	Guard-Hydro, Rear (RH)
16	1-803035	2	Rivet-Pop
17	116-2362	1	Deflector-Air Flow
18	109-9905	1	Sheave
19	1-807259	1	Key
20	131-7651-03	1	Guard, LH Rear [black]
21	131-7650-03	1	Guard, RH Rear [black]
99	114-4713	1	Hypr-Oil 500 (Quart) ●
99	114-4714	1	Hypr-Oil 500 (Gallon) ●
99	114-4715	1	Hypr-Oil 500-5 (5 Gallon) ●
99	117-0390	1	Filter-Hydro ●

● Not illustrated

Pump Idler Assembly No. 116-1255

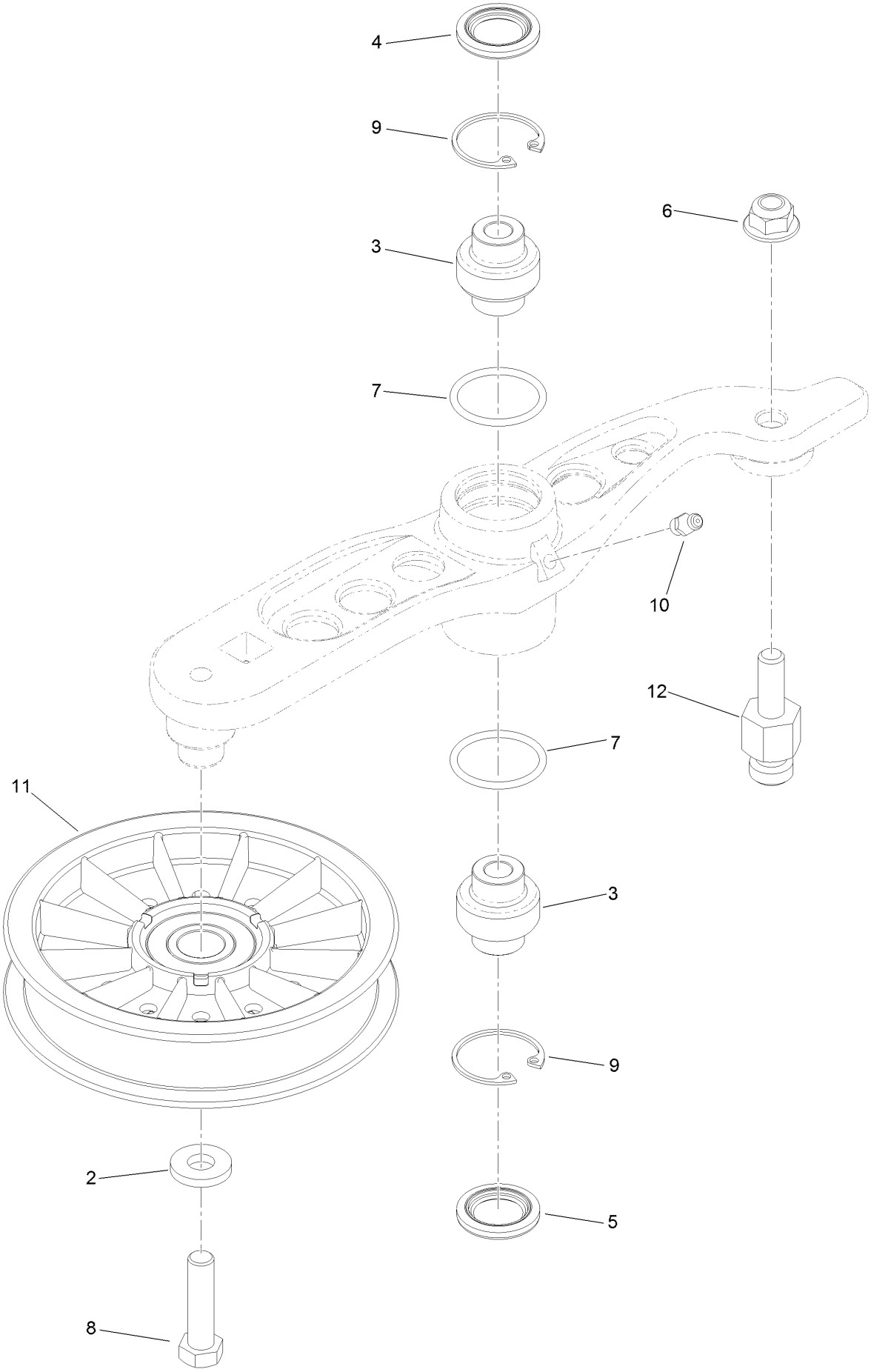

Pump Idler Assembly No. 116-1255 (continued)

Ref.	Part Number	Qty.	Description
2	43-0940	1	Spacer
3	103-3504	2	Bearing-Spherical
4	103-3505	1	Seal-Lip, Double
5	103-3506	1	Seal-Lip, Single
6	109-6658	1	Nut-Flange, NI
7	106-7159	2	O-Ring
8	323-8	1	Screw-HH
9	32120-10	2	Ring-Snap
10	302-19	1	Fitting-Grease
11	109-8076	1	Pulley-Idler
12	132-4724	1	Pin-Anchor, Spring

LH Hydro Assembly No. 126-1325

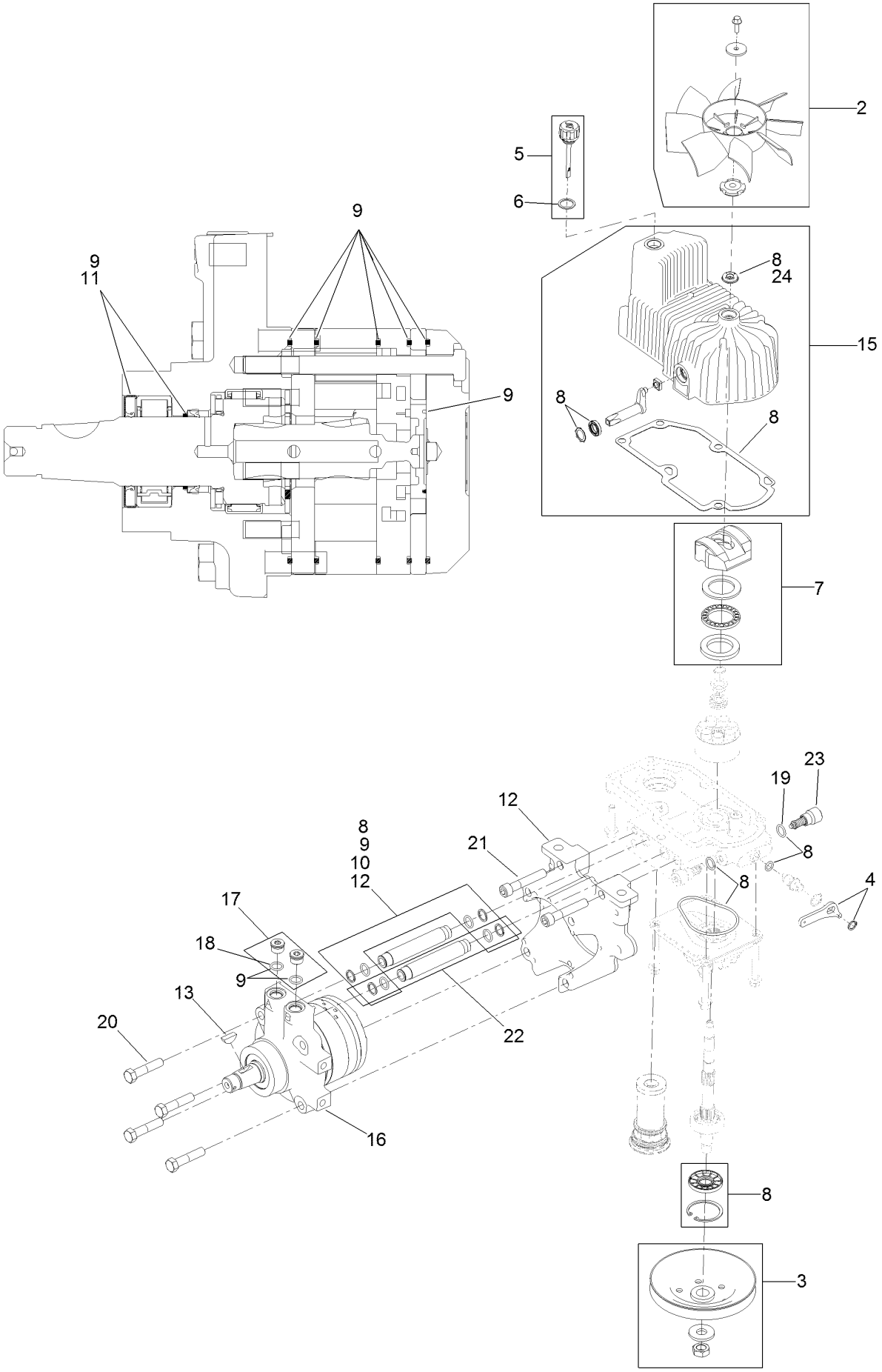

LH Hydro Assembly No. 126-1325 (continued)

Ref.	Part Number	Qty.	Description
2	116-0233	1	Fan Kit
3	116-0234	1	Pulley Kit
4	116-0235	1	Handle-Bypass Valve, Hydro
5	116-0236	1	Dipstick-Hydro W/Gasket
6	116-0237	1	Gasket-Dipstick, Hydro
7	116-1367	1	Swash Block Kit
8	116-1368	1	Pump Seal Kit
9	116-1369	1	Motor Seal Kit
10	116-1370	1	Tube Seal Kit
11	116-1371	1	Output Shaft Seal Kit
12	116-5469	1	Nose Cup-Uht
13	3257-42	1	Key-Woodruff
15	116-3287	1	Housing-LH
16	116-8917	1	Motor-Hydraulic, LH 280Cc
17	116-7901	1	Magnetic Plugs Service Kit
18	76-1900	2	O-Ring
19	116-8662	2	O-Ring-Check Valve
20	116-8974	4	Screw HH
21	116-8975	2	Screw-HSH
22	116-9922	2	Hydraulic Tube Kit
23	126-7467	2	Shock Valve, 16Cc Hydro
24	126-7711	1	Seal-Fan Drive
99	116-1373	1	Flow Test Kit ●
99	116-4245	1	Puller-Pulley

● Not illustrated

RH Hydro Assembly No. 126-1326

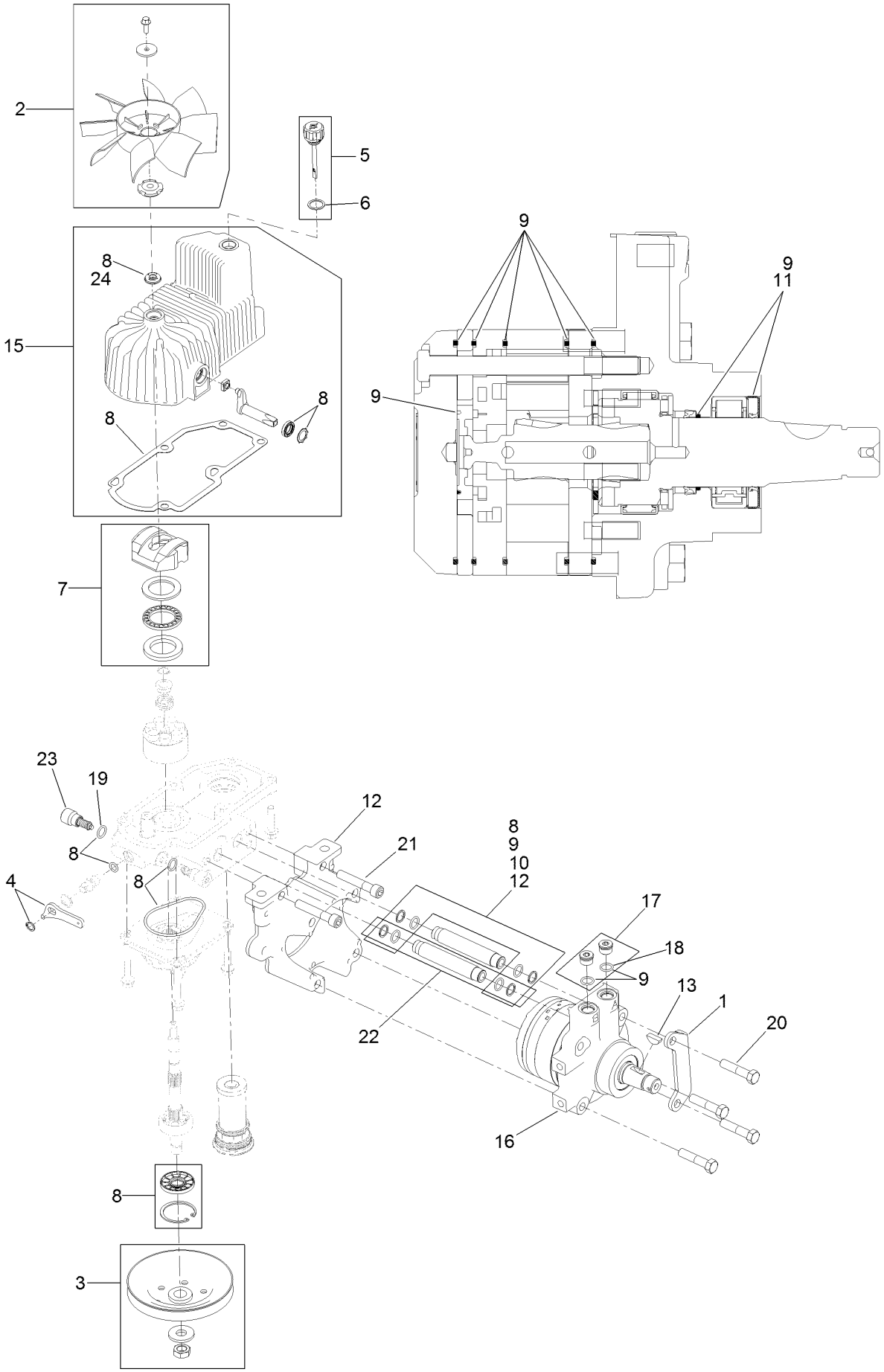

RH Hydro Assembly No. 126-1326 (continued)

Ref.	Part Number	Qty.	Description
1	116-9063	1	Mount-Shoe, Horse
2	116-0233	1	Fan Kit
3	116-0234	1	Pulley Kit
4	116-0235	1	Handle-Bypass Valve, Hydro
5	116-0236	1	Dipstick-Hydro W/Gasket
6	116-0237	1	Gasket-Dipstick, Hydro
7	116-1367	1	Swash Block Kit
8	116-1368	1	Pump Seal Kit
9	116-1369	1	Motor Seal Kit
10	116-1370	1	Tube Seal Kit
11	116-1371	1	Output Shaft Seal Kit
12	116-5469	1	Nose Cup-Uht
13	3257-42	1	Key-Woodruff
15	116-3288	1	Housing-RH
16	116-8918	1	Motor-Hydraulic, RH 280Cc
17	116-7901	1	Magnetic Plugs Service Kit
18	76-1900	2	O-Ring
19	116-8662	2	O-Ring-Check Valve
20	116-8974	4	Screw HH
21	116-8975	2	Screw-HSH
22	116-9922	2	Hydraulic Tube Kit
23	126-7467	2	Shock Valve, 16Cc Hydro
24	126-7711	1	Seal-Fan Drive
99	116-1373	1	Flow Test Kit ●
99	116-4245	1	Puller-Pulley

● Not illustrated

Rear Wheel Assembly

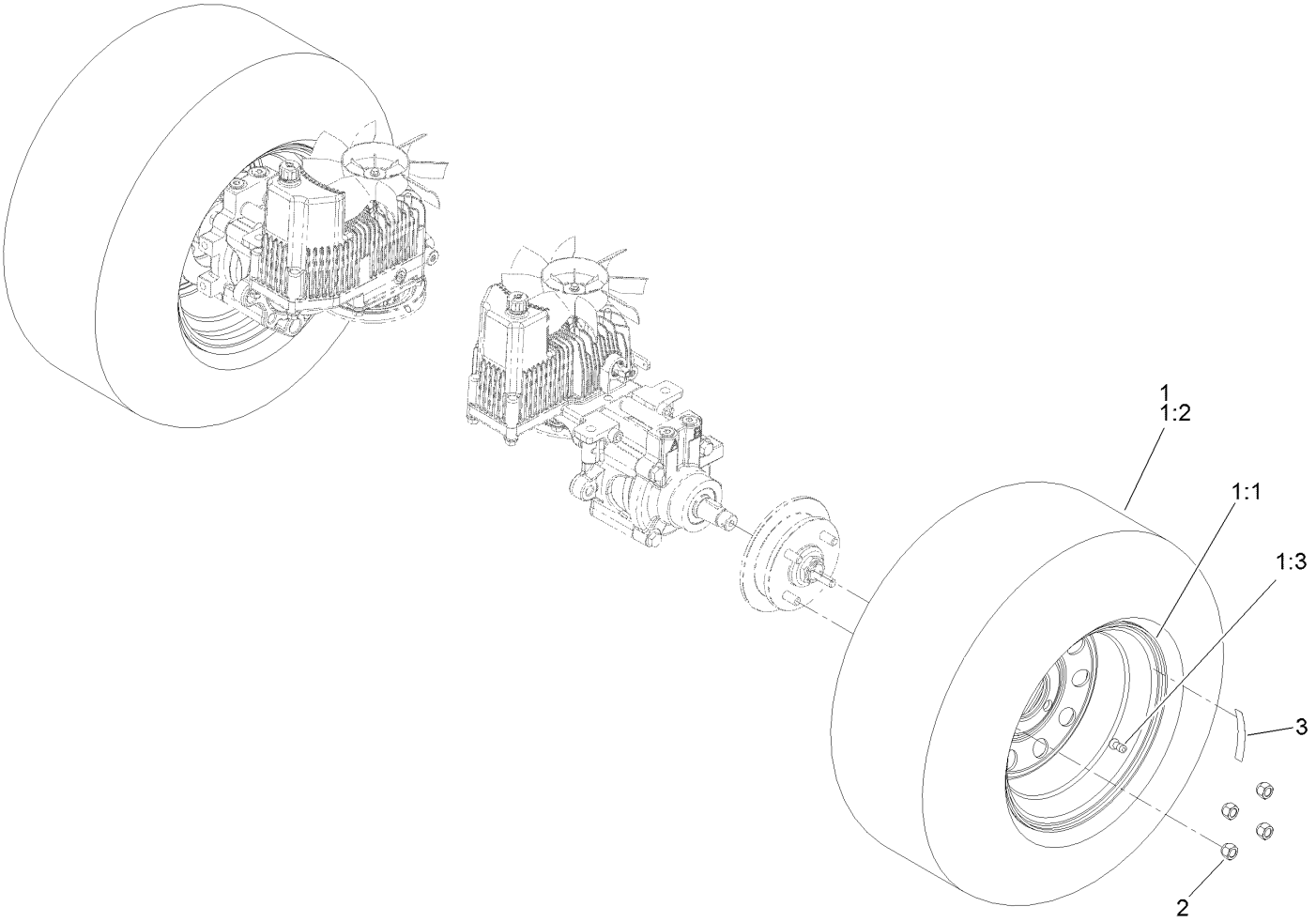

Rear Wheel Assembly (continued)

Ref.	Part Number	Qty.	Description
1	115-3588	2	Wheel And Tire ASM
1:1	109-2871	1	Rim
1:2	1-633993	1	Tire
1:3	232-27	1	Stem-Valve
2	242-50	8	Nut-Lug
3	126-2055	2	Decal-Torque, Wheel Hub Lug

Park Brake Assembly

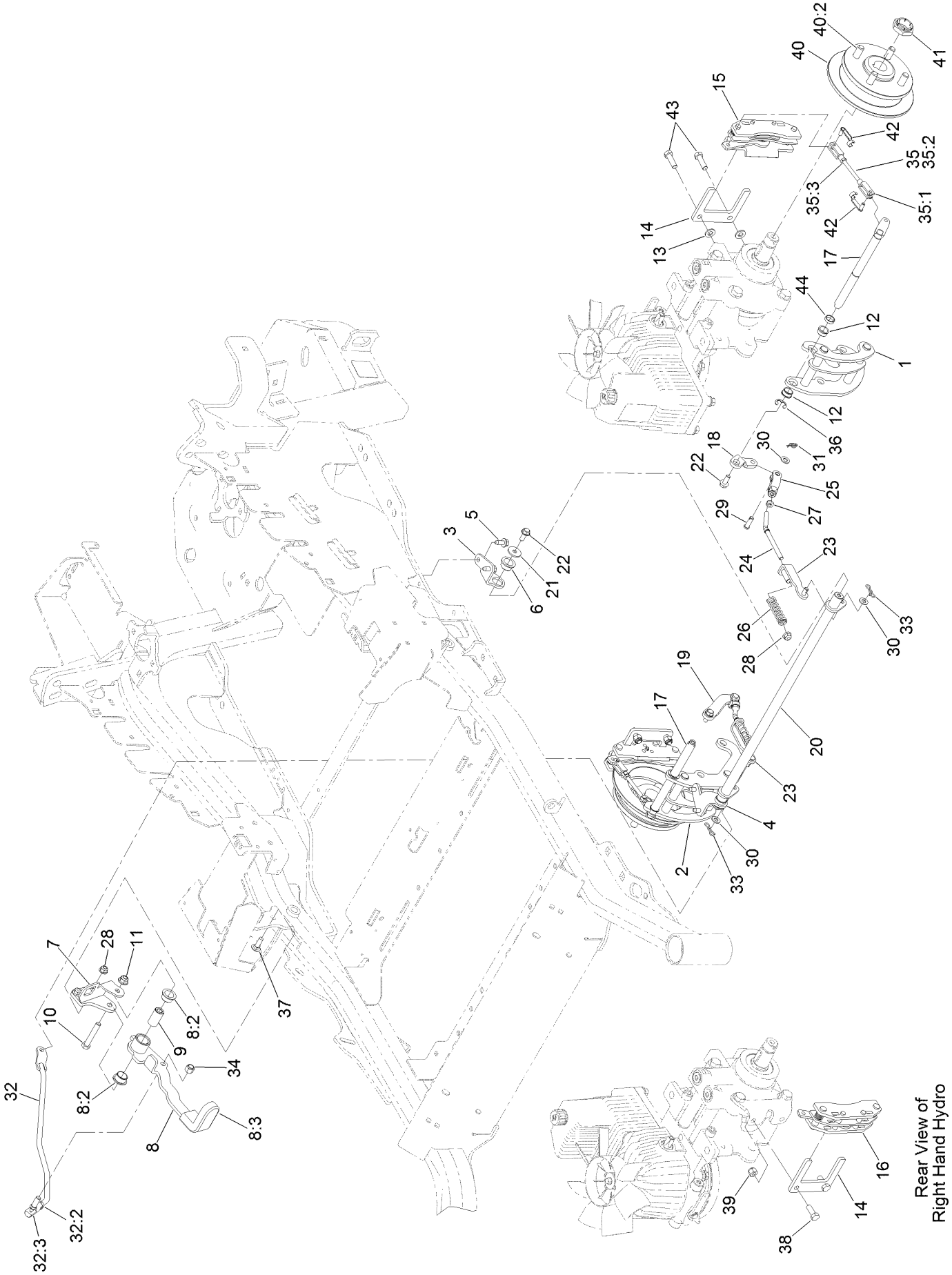

Park Brake Assembly (continued)

Ref.	Part Number	Qty.	Description
1	126-4248	1	Mount-Bellcrank, LH
2	126-4249	1	Mount-Bellcrank, RH
3	116-9681	1	Mount-Pivot, LH
4	116-9682	1	Mount-Pivot, RH
5	32144-70	4	Screw-HWHTF
6	109-8054	2	Bushing-Flange
7	116-9096-01	1	Bracket-Mount
8	132-9406	1	Brake Lever ASM W/ Grip
8:2	109-8054	2	Bushing-Flange
8:3	132-4749	1	Grip-Lever
9	116-9117	1	Handle-Pivot, Brake
10	323-11	1	Screw-HH
11	104-8301	1	Nut-HF, NI
12	126-6199	4	Bushing
13	3256-24	2	Washer-Flat
14	109-0958	2	Plate-Mount, Brake
15	109-2889	1	Caliper-Brake
16	116-9103	1	Caliper-Brake, RH
17	126-4251	2	Bellcrank
18	126-3715	1	Arm-Inner, LH
19	126-3716	1	Arm-Inner, RH
20	116-9080	1	Shaft-Cross
21	115-7109	2	Washer-Flat
22	98-9940	4	Screw
23	116-9609	2	Bracket-L
24	116-9086	2	Linkage-Mid
25	126-3693	2	Yoke-Offset
26	116-9085	2	Spring-Compression
27	3220-2	2	Nut-Jam
28	104-8300	4	Nut-HF, NI
29	1-808280	2	Pin-Clevis
30	3256-23	4	Washer-Plain
31	116-6639	2	Pin-Cotter, Locking
32	116-9102	1	Front Linkage ASM
32:2	94-7572	1	End-Tie Rod, RH
32:3	3220-3	1	Nut-HJ
33	119-1415	2	Pin-Cotter, Locking
34	3296-6	1	Nut-Lock
35	126-7587	2	Rear Linkage ASM
35:1	126-7588	2	Yoke
35:2	116-9069	1	Linkage, Rear
35:3	3220-1	1	Nut-Jam
36	32120-19	2	E-Ring
37	3230-2	2	Bolt-CARR
38	323-6	2	Screw-HH
39	3296-39	2	Nut-Lock, NI
40	116-1746	2	Wheel Hub ASM
40:2	116-1696	4	Stud-Wheel
41	116-1399	2	Locknut
42	126-6395	4	Pin-Clevis, Spring
43	92-5727	2	Screw-Lock, Patch
44	126-6200	2	Spacer

Fuel System Assembly

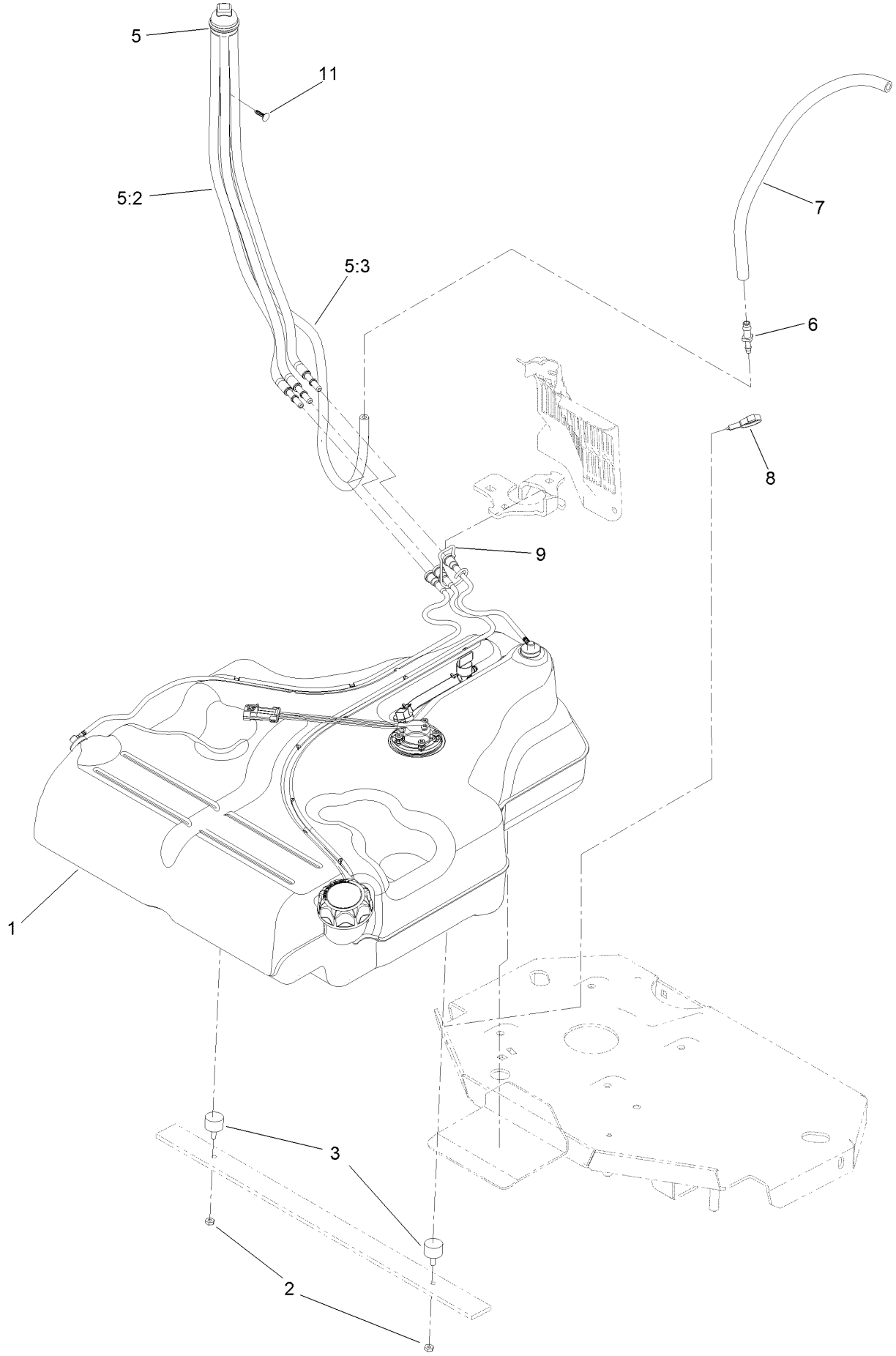

Fuel System Assembly (continued)

Ref.	Part Number	Qty.	Description
1	135-0643	1	Fuel Tank ASM
2	3218-1	2	Nut-Jam
3	1-523420	2	Bumper
5	127-0583	1	Fuel Manifold Vent ASM
5:2	109-0302	3	Hose-Fuel
5:3	108-5376	1	Hose-Fuel
6	116-5072	1	Fitting-Straight
7	116-5087	1	Hose-Fuel
8	105-1853	1	Clamp-Hose
9	116-6005	1	Retainer-Line, Vapor
11	125-8067	1	Plug-Plastic

Fuel Tank Assembly No. 135-0643

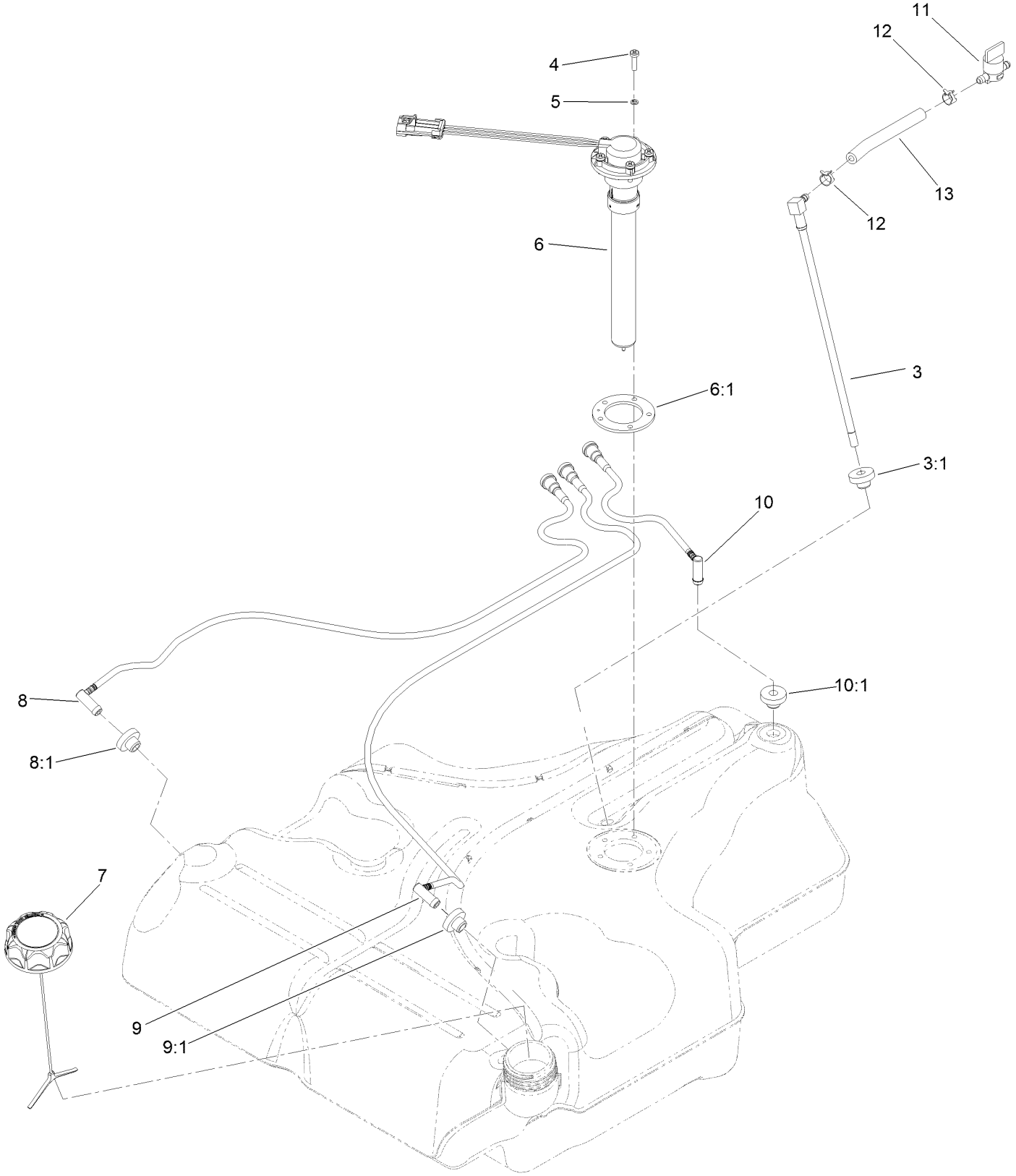

Fuel Tank Assembly No. 135-0643 (continued)

Ref.	Part Number	Qty.	Description
3	116-2459	1	Fuel Line Kit (With Grommet)
3:1	46-6560	1	Bushing
4	3290-500	5	Screw-PPH
5	3253-17	5	Washer-Lock
6	126-3913	1	Float-Sender, Fuel
6:1	126-3950	1	Gasket-Sender
7	126-1789	1	Cap-Fuel, Ratcheting
8	116-2460	1	RH Vent Line Kit (With Grommet)
8:1	46-6560	1	Bushing
9	116-2461	1	LH Vent Line Kit (With Grommet)
9:1	46-6560	1	Bushing
10	116-2462	1	Rear Vent Line Kit (With Grommet)
10:1	46-6560	1	Bushing
11	1-603770	1	Valve-Fuel
12	2412-98	2	Clamp-Hose
13	109-0650	1	Hose-Fuel

Seat Mounting Assembly

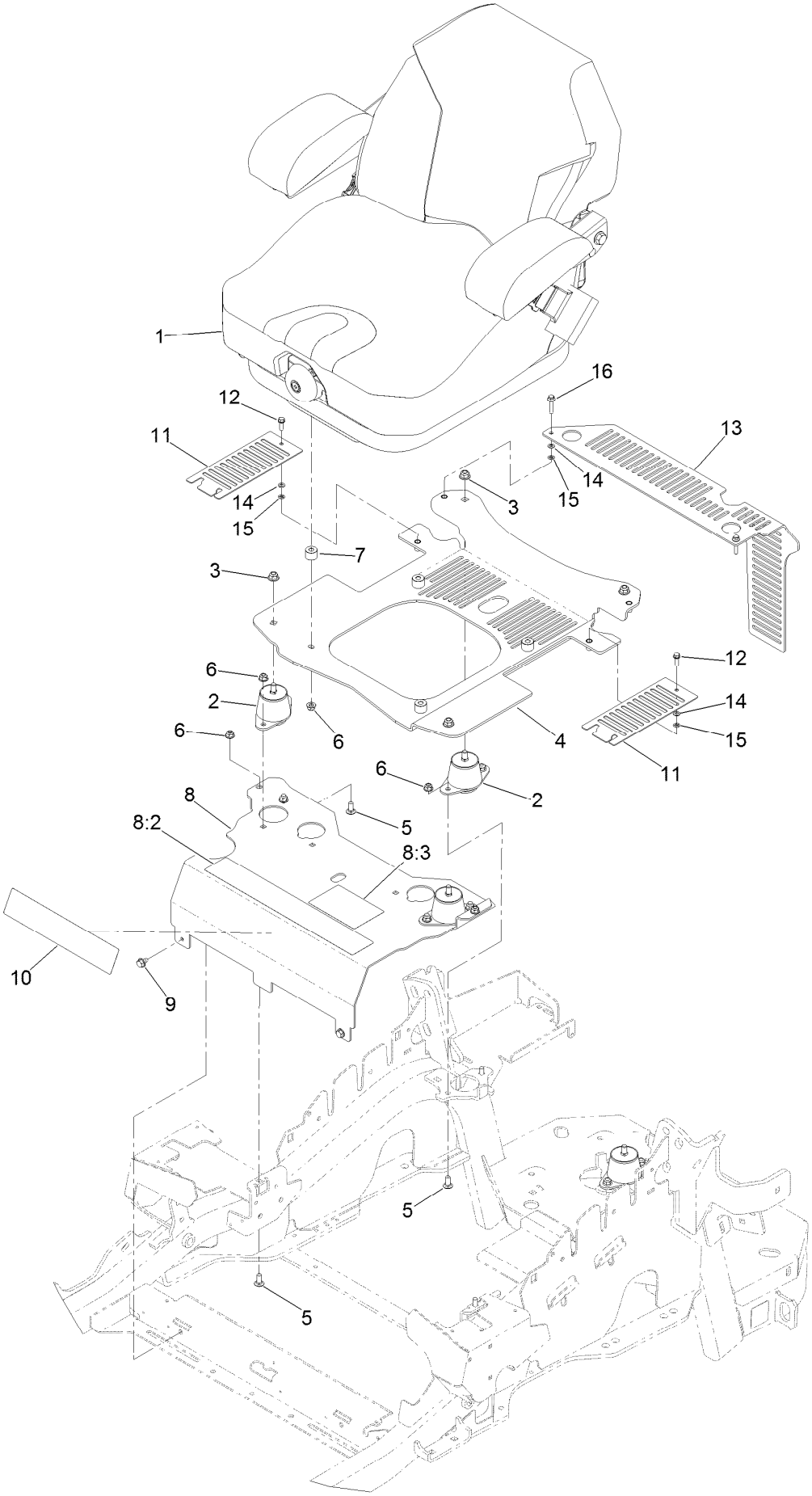

Seat Mounting Assembly (continued)

Ref.	Part Number	Qty.	Description
1	125-3107	1	Suspension Seat ASM
2	109-9034	4	Isolator-Seat
3	104-8301	4	Nut-HF, NI
4	117-0910	1	Seat Base ASM
5	3230-23	10	Screw-CARR
6	104-8300	14	Nut-HF, NI
7	116-9329	4	Spacer
8	116-2324	1	Mount-Seat
8:2	114-4468	1	Decal-Console
8:3	125-9383	1	Decal-Service Aid
9	9266934	2	Screw
10	119-2507	1	Decal
11	117-0901-03	2	Cover
12	32105-15	2	Screw-HWH
13	114-1548-03	1	Guard
14	3256-60	4	Washer-Flat
15	106-8737	4	Nut-Retainer
16	3234-21	2	Screw-HHF

Seat Assembly No. 125-3107

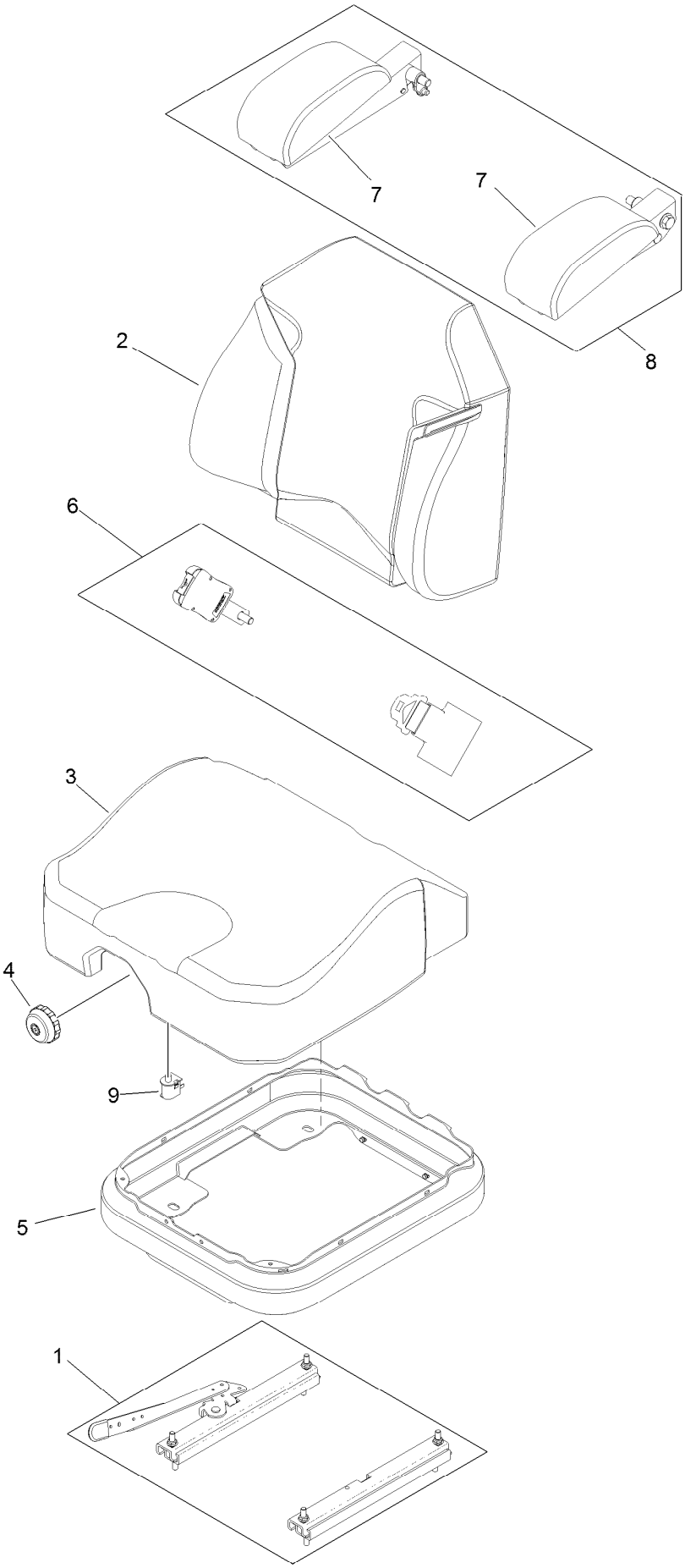

Seat Assembly No. 125-3107 (continued)

Ref.	Part Number	Qty.	Description
1	116-8910	1	Seat Track Set
2	125-3112	1	Cover-Back
3	125-3111	1	Cover-Cushion
4	116-8911	1	Knob-Adjuster
5	116-5659	1	Cover-Suspension Bellows
6	126-2061	1	Seat Belt Service Kit
7	109-9802	1	Arm Rest Pad Set
8	109-9803	1	Arm Rest Set
9	82-2190	1	Switch-Bail

Motion Control Assembly

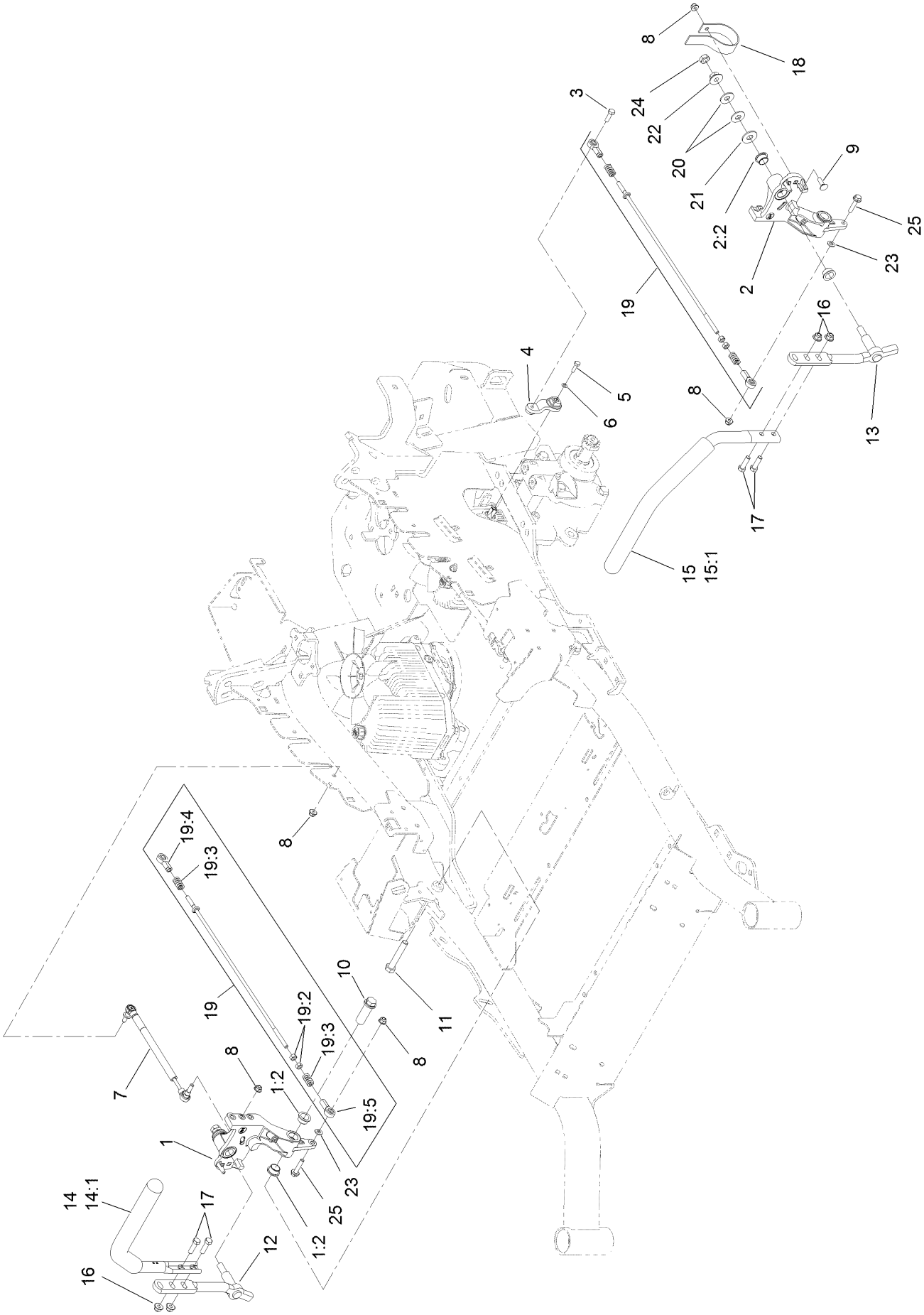

Motion Control Assembly (continued)

Ref.	Part Number	Qty.	Description
1	116-0880	1	RH Motion Control And Bushing ASM
1:2	109-8054	4	Bushing-Flange
2	116-0881	1	LH Motion Control And Bushing ASM
2:2	109-8054	4	Bushing-Flange
3	116-0648	2	Screw-HH, Thread Locking ●
4	109-4581	2	Arm-Control, Pump
5	9080046	2	Screw-HH ●
6	1-303435	2	Washer-Spring
7	116-0027	2	Damper-Control, Motion
8	104-8300	8	Nut-HF, NI
9	3230-2	2	Bolt-CARR
10	109-5891	2	Hub-Threaded
11	325-12	2	Screw-HH
12	116-0039	1	Lever-Control Motion, RH
13	116-0040	1	Lever-Control Motion, LH

Ref.	Part Number	Qty.	Description
14	109-6589	1	RH Steering Handle ASM
14:1	109-5668	1	Grip-Control, Lever
15	109-6590	1	LH Steering Handle ASM
15:1	109-5668	1	Grip-Control, Lever
16	104-8301	4	Nut-HF, NI
17	323-7	4	Screw-HH
18	109-5575	2	Spring-Leaf
19	109-8106	2	Front Pump Linkage ASM
19:2	3219-2	2	Nut-Hex
19:3	1-323245	2	Spring-Compression
19:4	1-633152	1	Balljoint-LH
19:5	1-543017	1	Balljoint-RH
20	109-9505	4	Washer-Spring
21	3256-6	2	Washer-Flat
22	32128-56	2	Nut-HF
23	3256-23	2	Washer-Plain
24	3218-5	2	Nut-Jam
25	115-1794	2	Screw-HHF

● Use Pro-Lock, Nut Type (P/N 1-840022, .5ml tube) on threads.

Console and Control Assembly

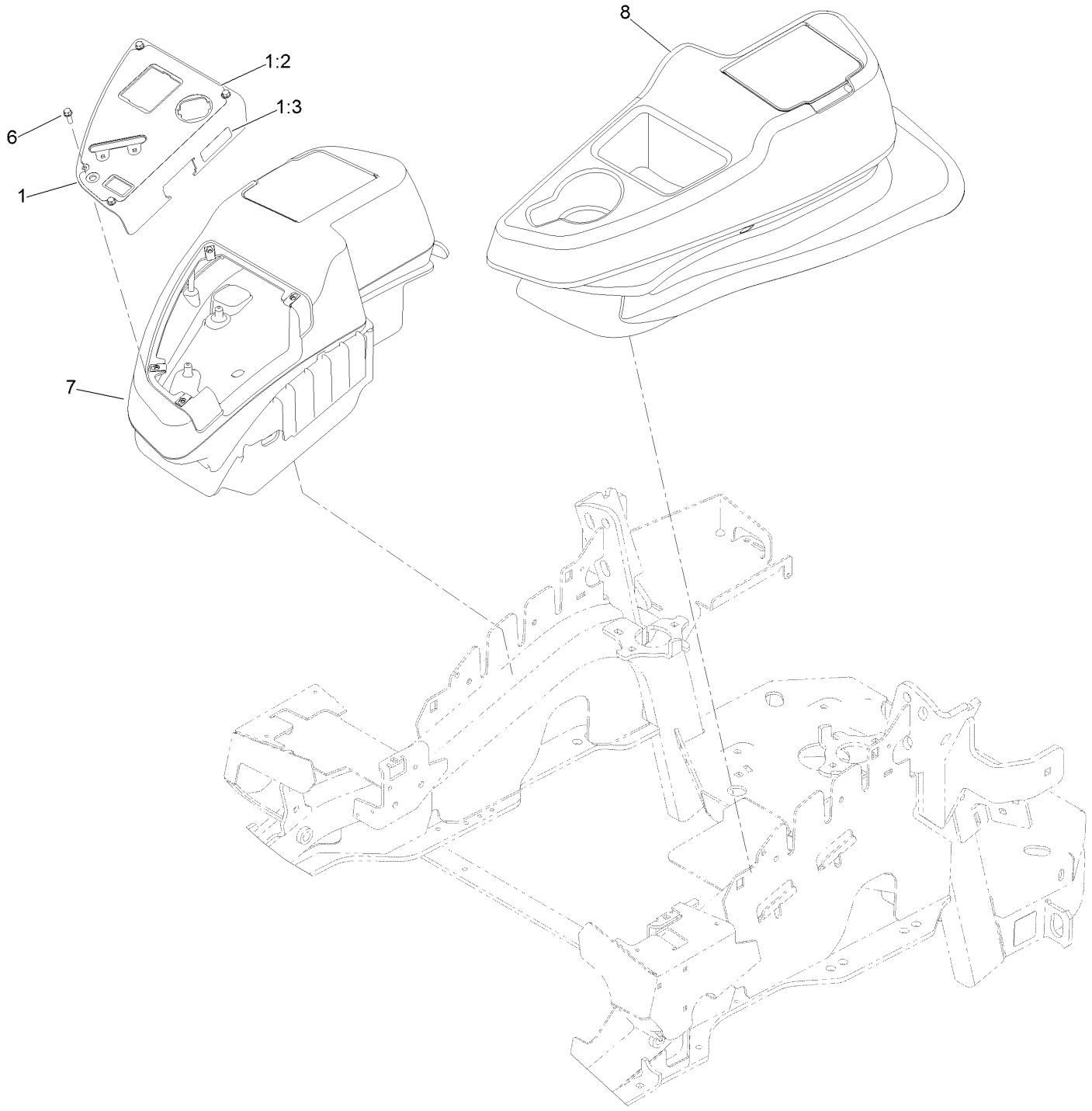

Console and Control Assembly (continued)

Ref.	Part Number	Qty.	Description
1	114-9836	1	Control Panel ASM
1:2	120-5897	1	Decal-Panel, Control
1:3	114-4466	1	Decal-Fuses
6	32105-15	4	Screw-HWH
7	115-7400	1	RH Console ASM
8	115-7401	1	LH Console ASM

RH Console Assembly No. 115-7400

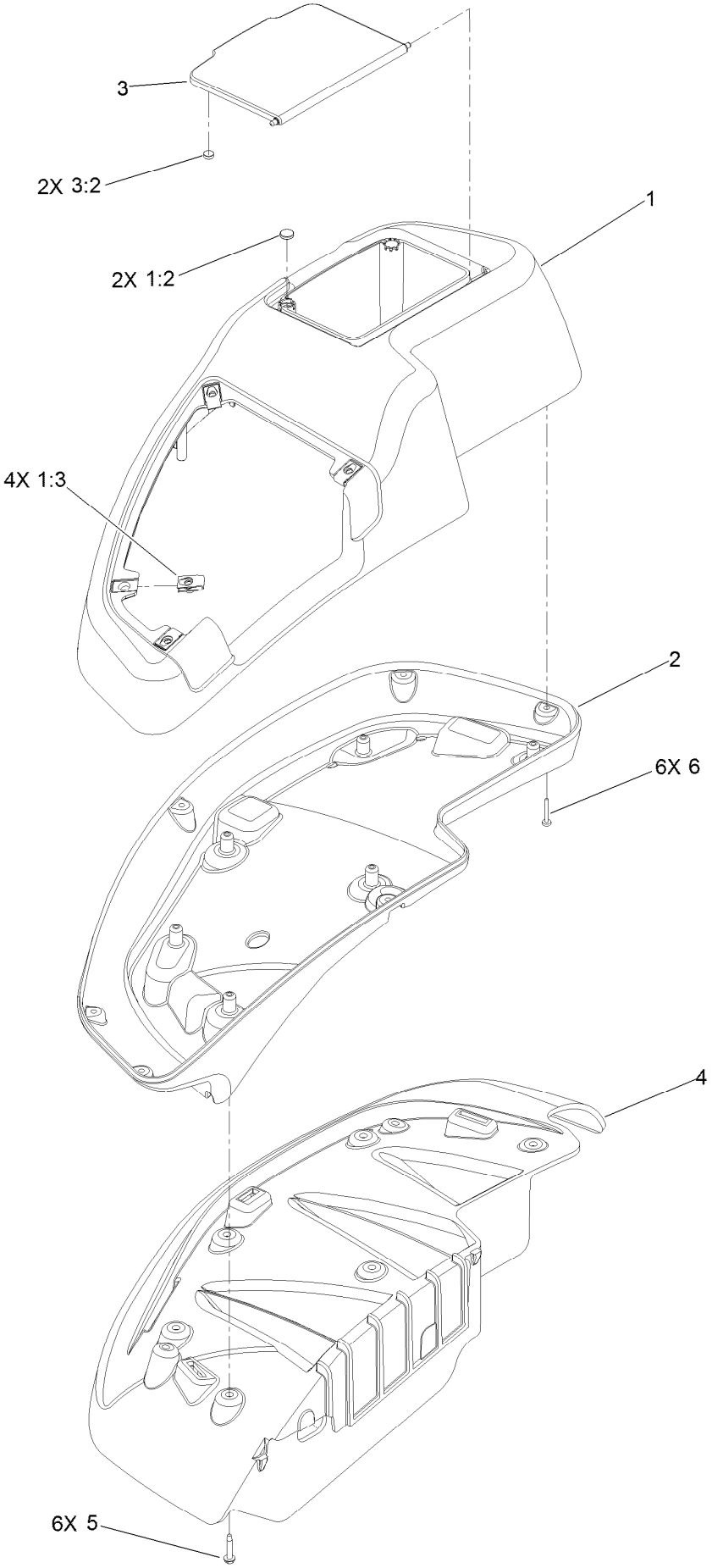

RH Console Assembly No. 115-7400 (continued)

Ref.	Part Number	Qty.	Description
1	114-1538	1	RH Wide Top Console ASM
1:2	117-0883	2	Puck
1:3	107069	4	Clip
2	115-3643	1	Console-Lower, RH Wide
3	114-1537	1	Wide Lid ASM
3:2	114-5896	2	Magnet
4	109-9083	1	Fender-Wide, RH
5	32144-89	6	Screw-Thread Forming
6	117-0347	6	Screw-PPH

LH Console Assembly No. 115-7401

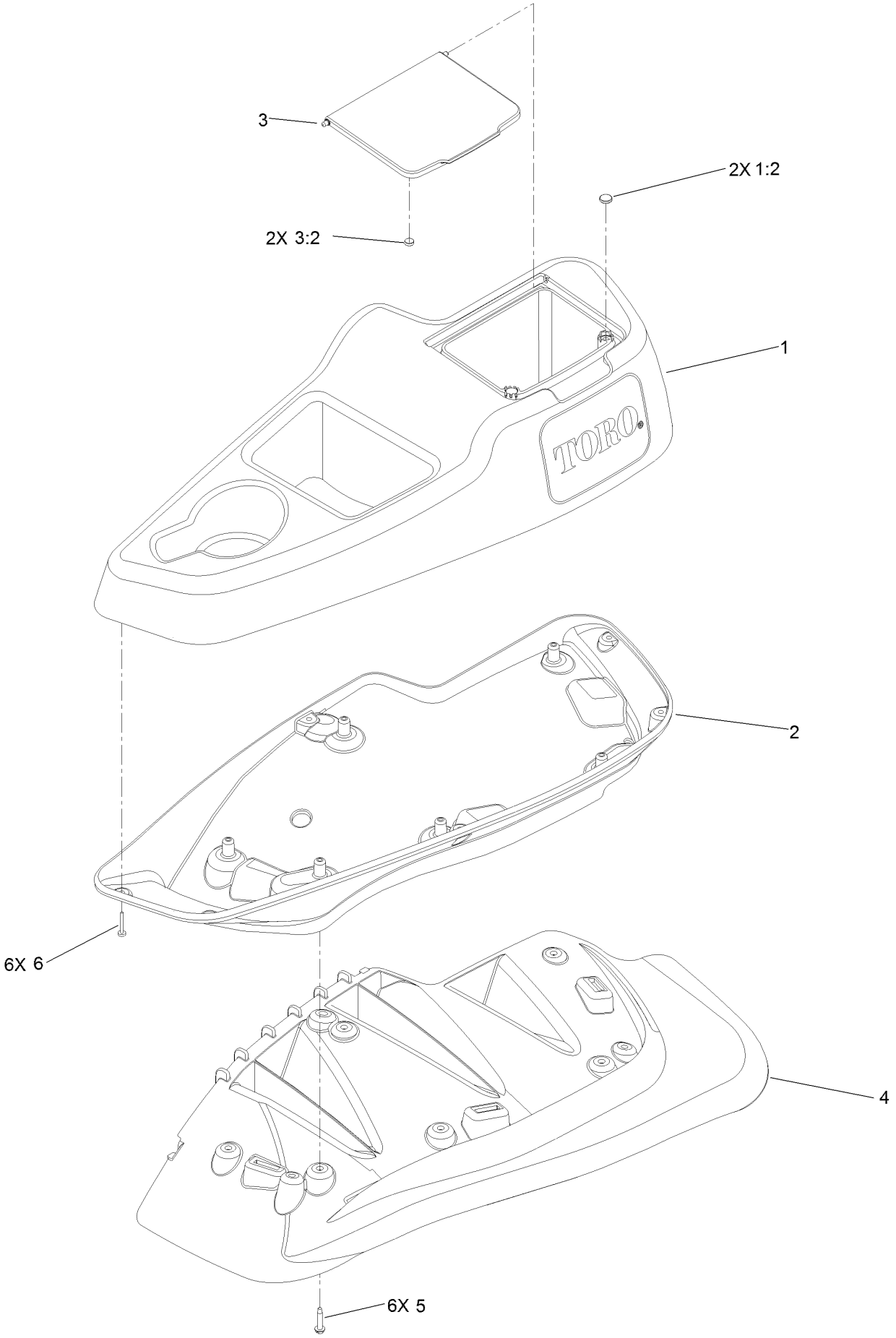

LH Console Assembly No. 115-7401 (continued)

Ref.	Part Number	Qty.	Description
1	114-1539	1	LH Wide Console Top ASM
1:2	117-0883	2	Puck
2	115-3641	1	Console-Lower, LH Wide
3	114-1537	1	Wide Lid ASM
3:2	114-5896	2	Magnet
4	109-9085	1	Fender-Wide, LH
5	32144-89	6	Screw-Thread Forming
6	117-0347	6	Screw-PPH

Electrical Assembly

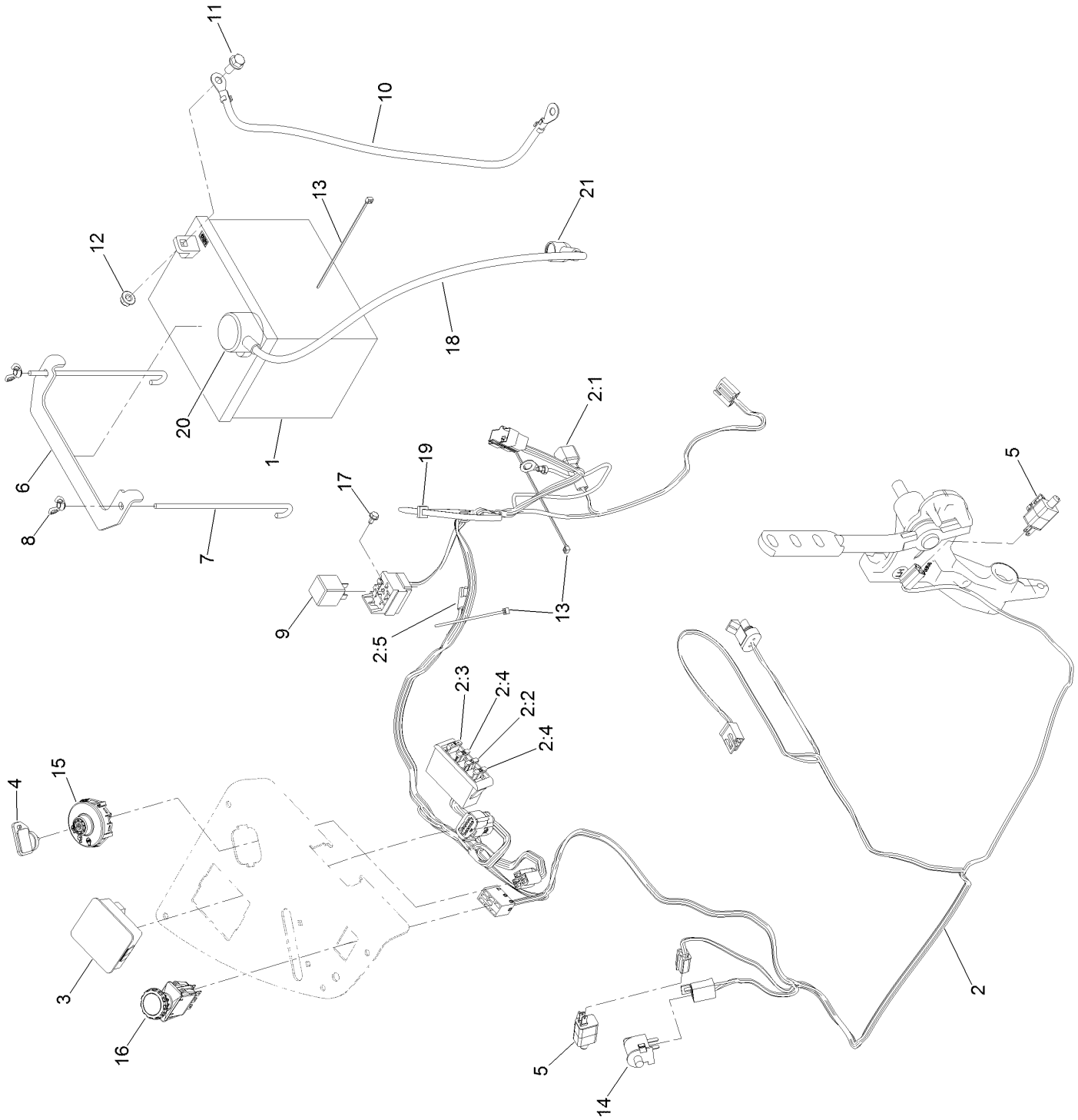

Electrical Assembly (continued)

Ref.	Part Number	Qty.	Description
1	104-8162	1	Battery-Dry
2	116-6009	1	Harness-Wire, Main ●
2:1	103-3895	1	Diode
2:2	218-578	1	Fuse-Blade, 10 Amp
2:3	109355	1	Fuse-Blade, 15 Amp
2:4	109102	2	Fuse-Blade, 25 Amp
2:5	116-0053	1	Cap-Plug
3	117-3882	1	Fuel/Hour Meter ASM
4	1-603511	1	Keys-Ignition (Spare Pair)
4	63-8360	1	Key-Ignition
5	110-6765	2	Switch
6	116-0042-03	1	Strap-Tie Down, Battery
7	1-633651	2	Bolt-Holddown
8	1-543792	2	Wingnut
9	1-643275	1	Relay
10	114-1218	1	Cable-Battery, Negative
11	3234-5	2	Screw-HHF
12	104-8300	2	Nut-HF, NI
13	1-303287	3	Tie-Cable
14	82-2190	1	Switch-Bail
15	137-4100	1	Switch-Ignition
16	116-0124	1	Switch-PTO, 10 Amp
17	104-2065	1	Screw-HWH
18	115-3864	1	Cable-Battery, Positive
19	1-303335	1	Tie-Plastic
20	109-2407	1	Insulator-Battery
21	1-543393	1	Insulator-Solenoid

● Use dielectric grease on all unsealed connectors and terminals only. Do not apply in sealed connectors.

Deck Lift Assembly

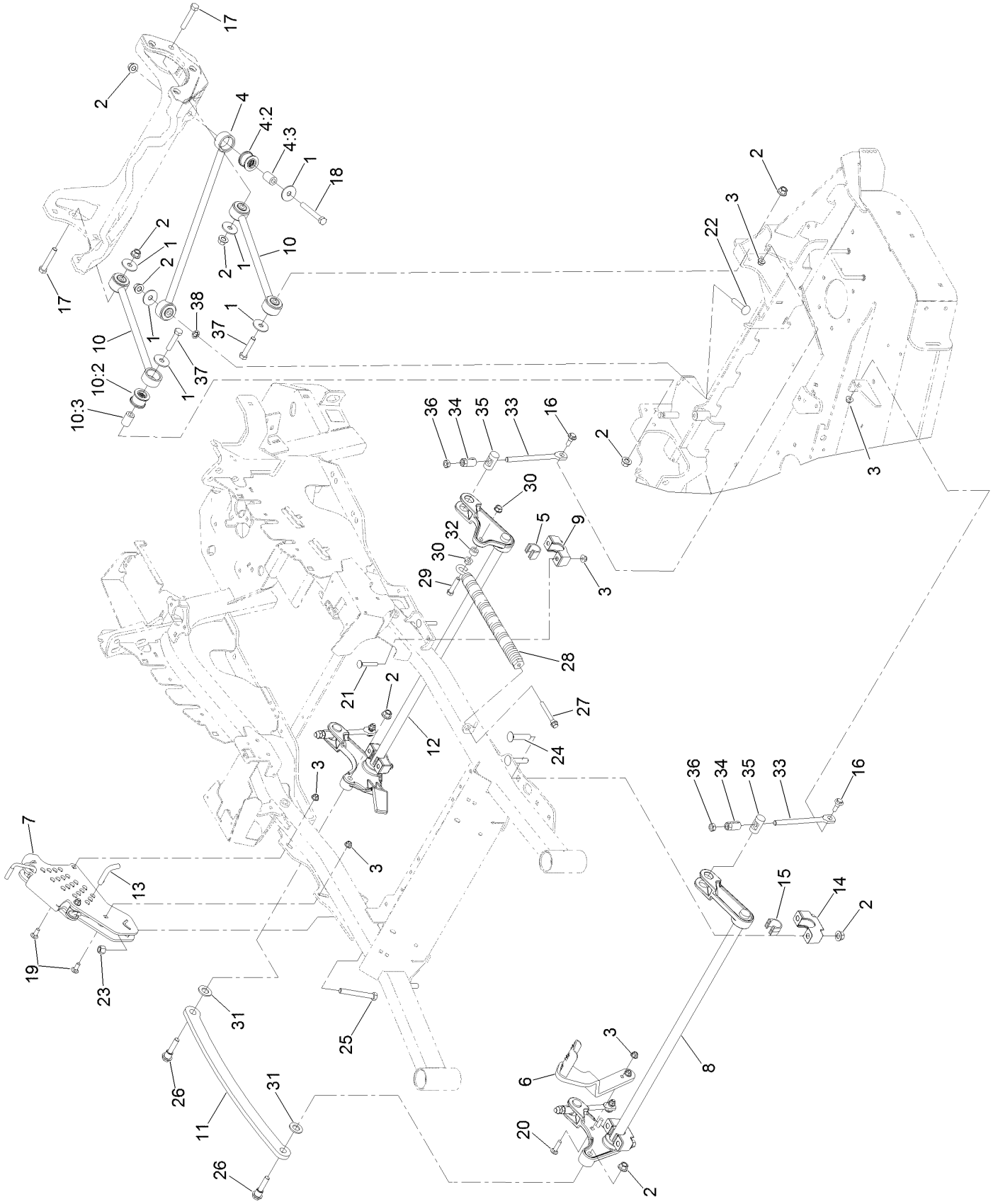

Deck Lift Assembly (continued)

Ref.	Part Number	Qty.	Description
1	86-1990	6	Washer-Thrust
2	99-5107	12	Nut-Lock
3	104-8301	12	Nut-HF, NI
4	109-5013	1	Panhard Rod ASM
4:2	109-5009	2	Bushing-Suspension, Rubber
4:3	109-5010	2	Spacer
5	109-7173	2	Bearing-Cross Shaft, Rear
6	116-1919-01	1	Lever-Foot
7	117-3842	1	Height-Of-Cut ASM
8	126-2477-03	1	Decklift-Front
9	127-0553	2	Support-Cross Shaft, Bearing Rear
10	109-7952	2	Deck Strut ASM
10:2	109-5009	2	Bushing-Suspension, Rubber
10:3	109-5010	2	Spacer
11	116-0797-03	1	Link-Lift, Deck
12	116-2645-03	1	Lift-Deck, Rear
13	116-5584	1	Pin-HOC
14	109-9409	2	Support-Cross Shaft, Bearing
15	109-9410	2	Bearing-Cross Shaft, Front
16	109-9840	4	Screw-Shoulder, HHF
17	325-12	2	Screw-HH
18	325-17	1	Screw-HH
19	3231-2	2	Bolt-CARR
20	3231-4	2	Screw-CARR
21	3231-7	4	Screw-CARR
22	3233-34	1	Screw-CARR
23	3296-23	1	Nut-Lock, NI
24	116-1700	4	Bolt-CARR
25	116-0559	1	Bolt-TAP
26	116-2022	2	Screw-HHF, Shoulder
27	92-7674	1	Bolt-Shoulder
28	116-0000	1	Spring-Extension
29	109-9065	1	Screw-HH
30	32128-37	2	Nut-HF
31	3256-28	2	Washer-Flat
32	116-2695	1	Spacer
33	109-8007	4	Link-Adjuster, Deck Lift
34	109-7840	4	Adjuster-Lift, Deck
35	109-8353	4	Trunnion
36	3218-5	4	Nut-Jam
37	325-10	2	Screw-HH
38	126-2916	1	Nut-Push

Height-of-Cut Assembly No. 117-3842

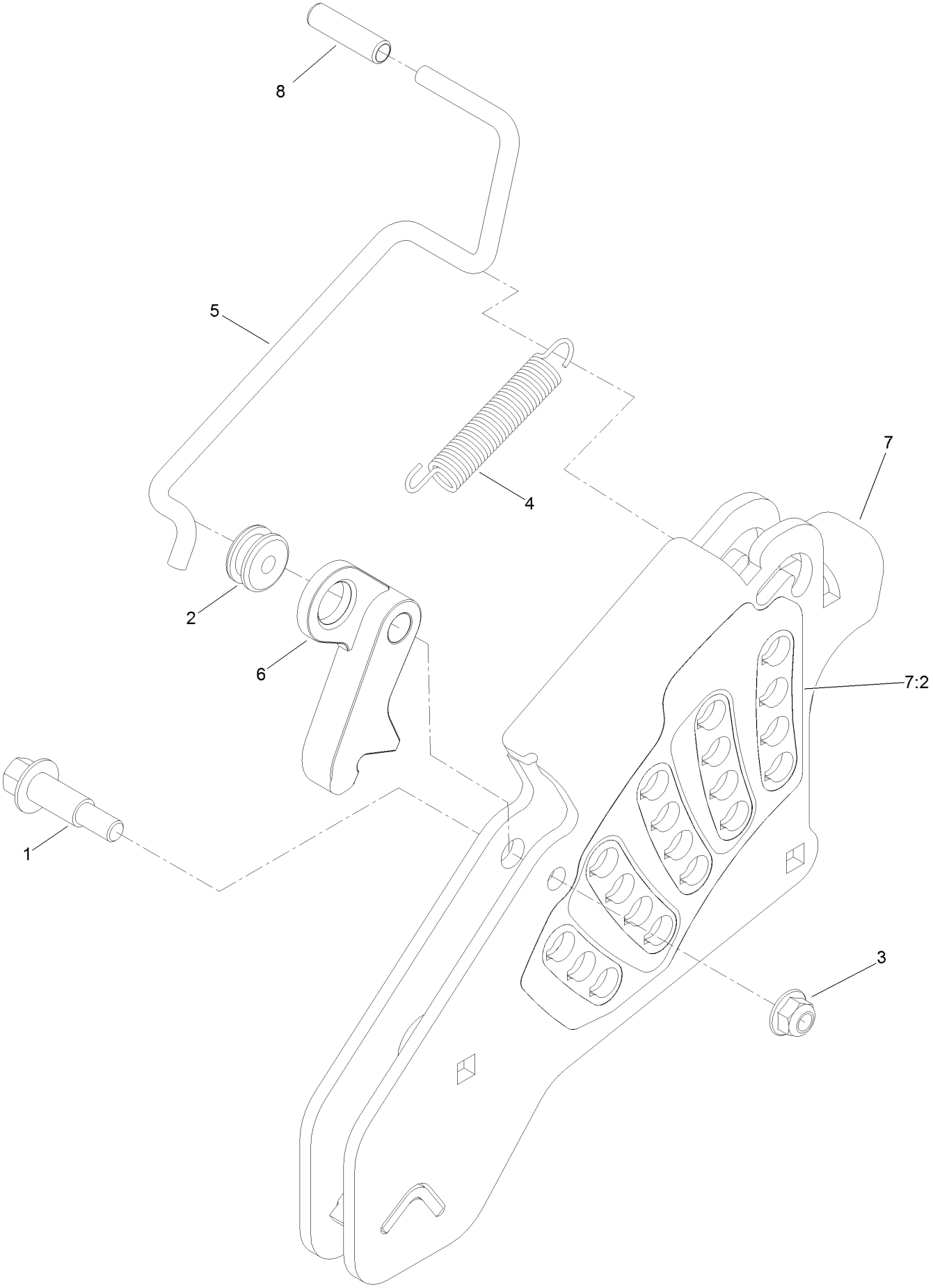

Height-of-Cut Assembly No. 117-3842 (continued)

Ref.	Part Number	Qty.	Description
1	62-1330	1	Bolt-Shoulder
2	109-7130	1	Grommet
3	104-8301	1	Nut-HF, NI
4	109-7124	1	Spring-Extension
5	109-7128	1	Rod-Lock, Transport
6	116-0118	1	Pawl-Transport, HOC
7	117-3837	1	Plate-Height Adjuster
7:2	114-4470	1	Decal-HOC
8	109-8250	1	Grip-Lever

Engine, Clutch and Muffler Assembly

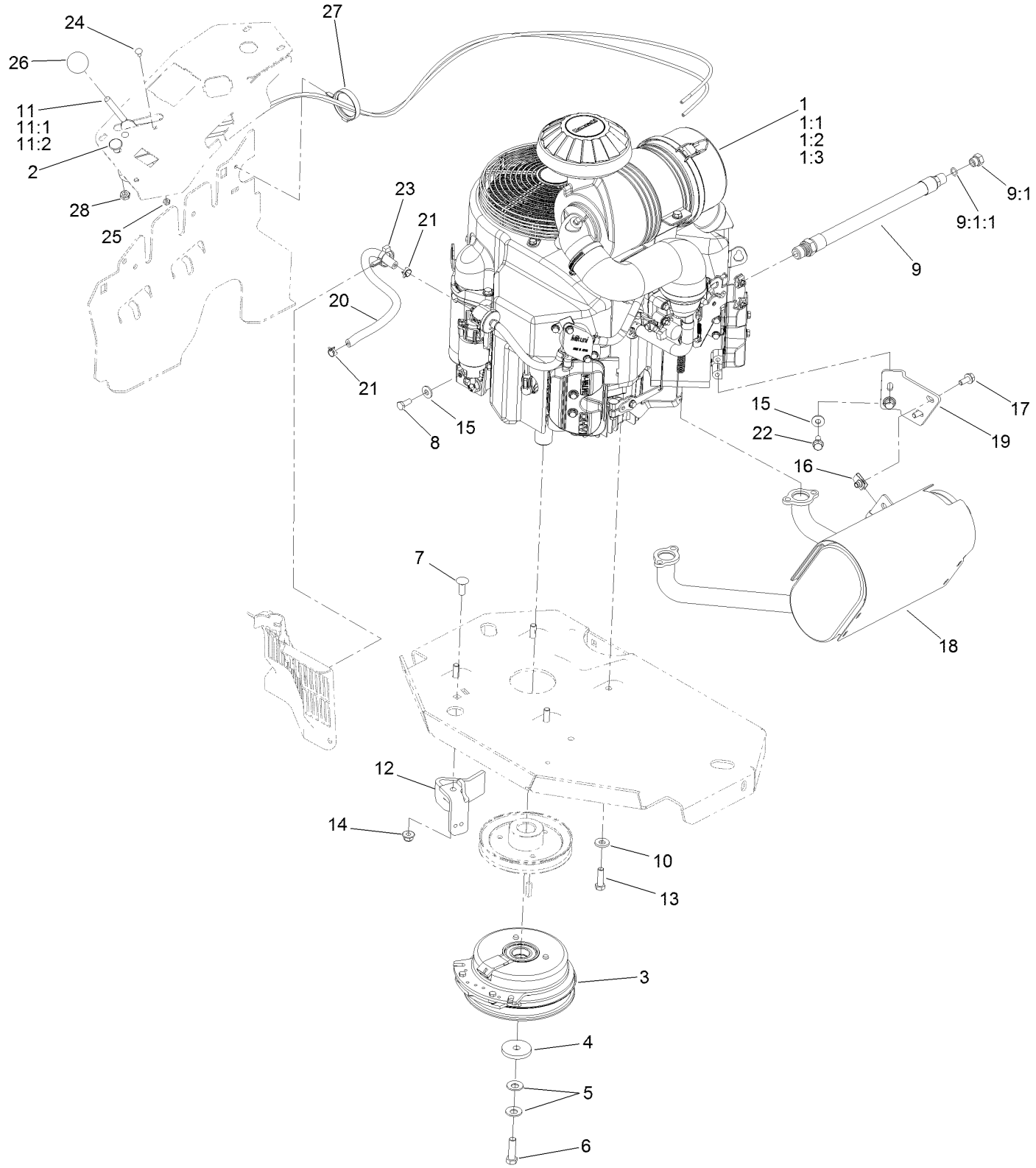

Engine, Clutch and Muffler Assembly (continued)

Ref.	Part Number	Qty.	Description
1		1	Engine-Kawasaki, Fx801V-S04-R ▲◆
1:1		1	Kawasaki 49065-2078 Engine Oil Filter ▲◆
1:2		1	Kawasaki 11013-7044 Engine Air Filter ▲◆
1:3		1	Kawasaki 11013-7045 Safety Filter ▲◆
2	115-2753	1	Control-Choke
3	116-1620	1	Clutch Kit
4	109-6919	1	Washer-Clutch
5	1-603610	2	Washer-Spring
6	109-9761	1	Screw-HH ❑
7	3231-22	1	Screw-CARR
8	33114-020	1	Screw-HH
9	116-4924	1	Engine Oil Drain Hose ASM ■
9:1	353-508	1	Plug-HH ●
9:1:1	237-42	1	O-Ring
10	98-5975	4	Washer-Belleville
11	110-5727	1	Throttle Control ASM
11:1	112-2334	1	Lever-Throttle
11:2	110-5728	1	Cable-Throttle
12	116-2612-01	1	Clutch-Anchor
13	323-7	4	Screw-HH
14	104-8301	1	Nut-HF, NI
15	1-303334	3	Washer-Spring
16	94-2413	2	Nut-U
17	3234-5	2	Screw-HHF
18	116-1712	1	Muffler
19	116-0203	1	Bracket-Muffler
20	109-0296	1	Hose-Fuel
21	2412-98	2	Clamp-Hose
22	95-4184	2	Screw-HHF
23	105-1853	1	Clamp-Hose
24	1-807513	2	Bolt-CARR
25	3296-2	2	Nut-Lock, NI
26	1-603175	1	Knob-Ball
27	117-7817	1	Clamp-Harness
28	3220-3	1	Nut-HJ

● Torque to 24-26 ft-lb
▲ Not serviced separately
❑ Use Pro-Lock, Nut Type (P/N 1-840022, .5ml tube) on threads.
■ Torque to 23-29 ft-lb
◆ Obtain parts from www.kawpowerepc.com

Rear Discharge Tunnel Assembly

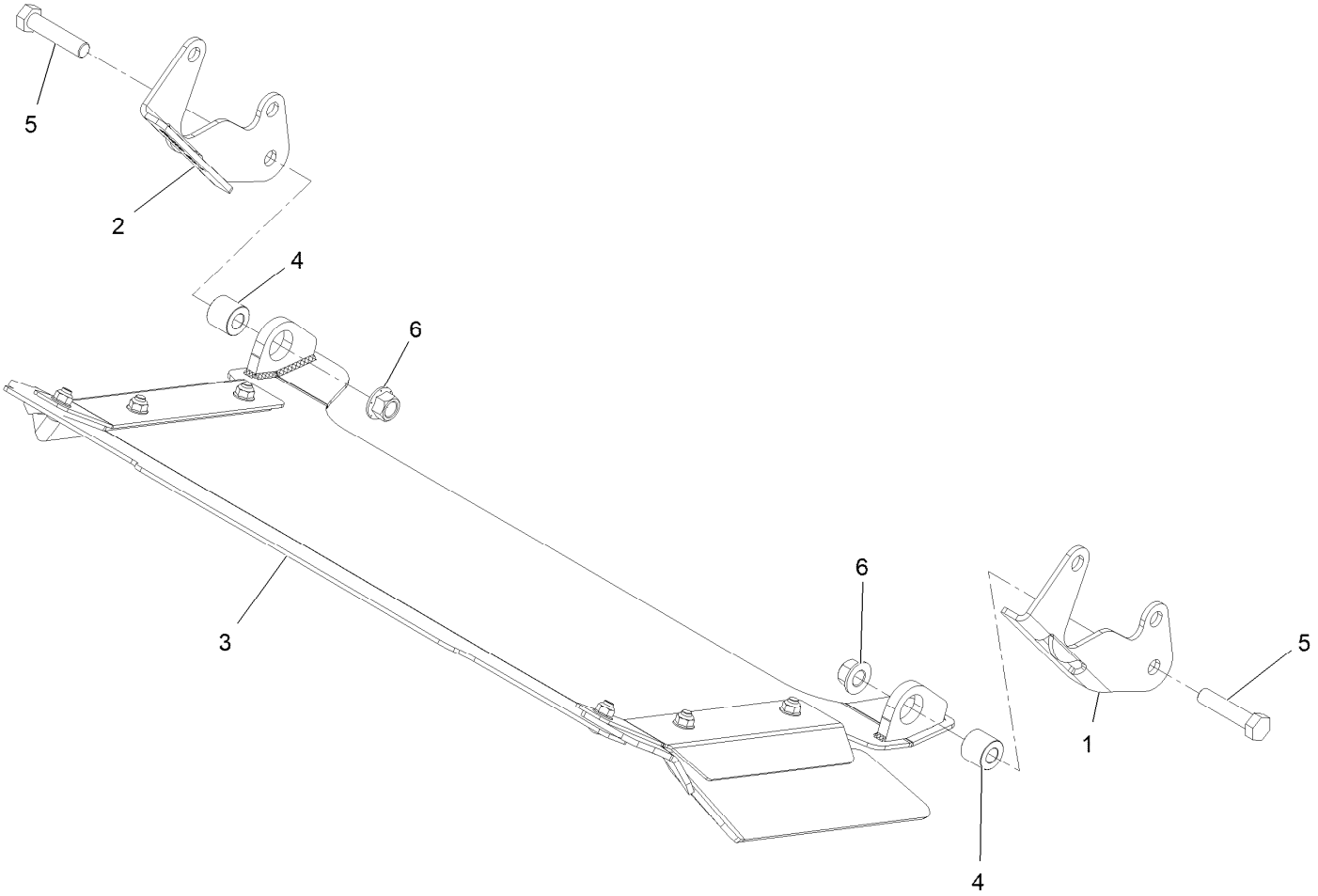

Rear Discharge Tunnel Assembly (continued)

Ref.	Part Number	Qty.	Description
1	125-9369-03	1	Bracket-Discharge Mount, LH
2	125-9370-03	1	Bracket-Discharge Mount, RH
3	126-4930	1	Discharge Tunnel ASM
4	126-1705	2	Bushing-Sleeve
5	325-9	2	Screw-HH
6	99-5107	2	Nut-Lock

Discharge Tunnel Assembly No. 126-4930

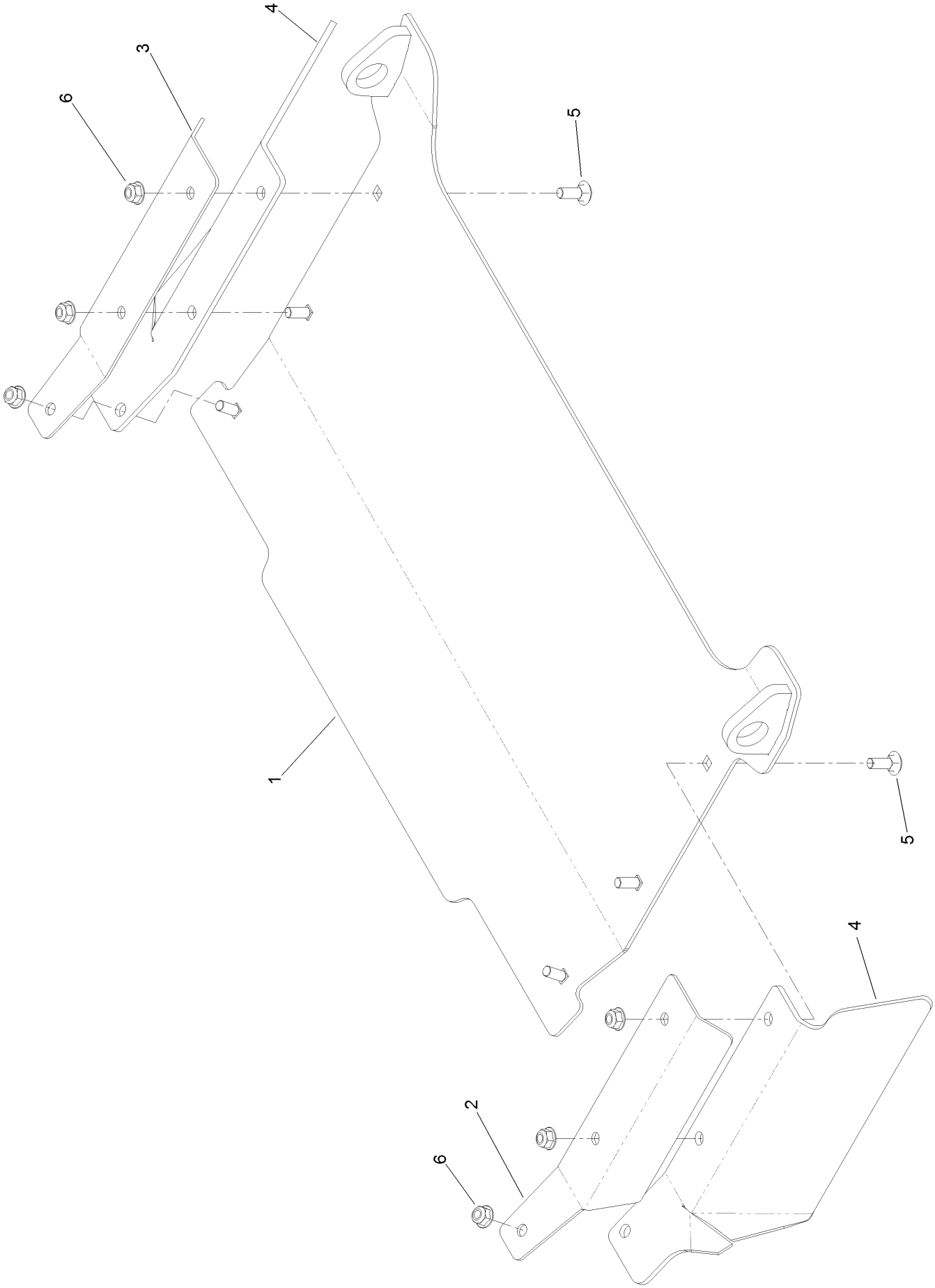

Discharge Tunnel Assembly No. 126-4930 (continued)

Ref.	Part Number	Qty.	Description
1	126-4929-03	1	Discharge Tunnel ASM
2	125-9366-03	1	Bracket-Flap, LH
3	125-9367-03	1	Bracket-Flap, RH
4	125-9368	2	Flap-Rubber
5	3230-16	6	Screw-CARR
6	104-8300	6	Nut-HF, NI

Deck Assembly

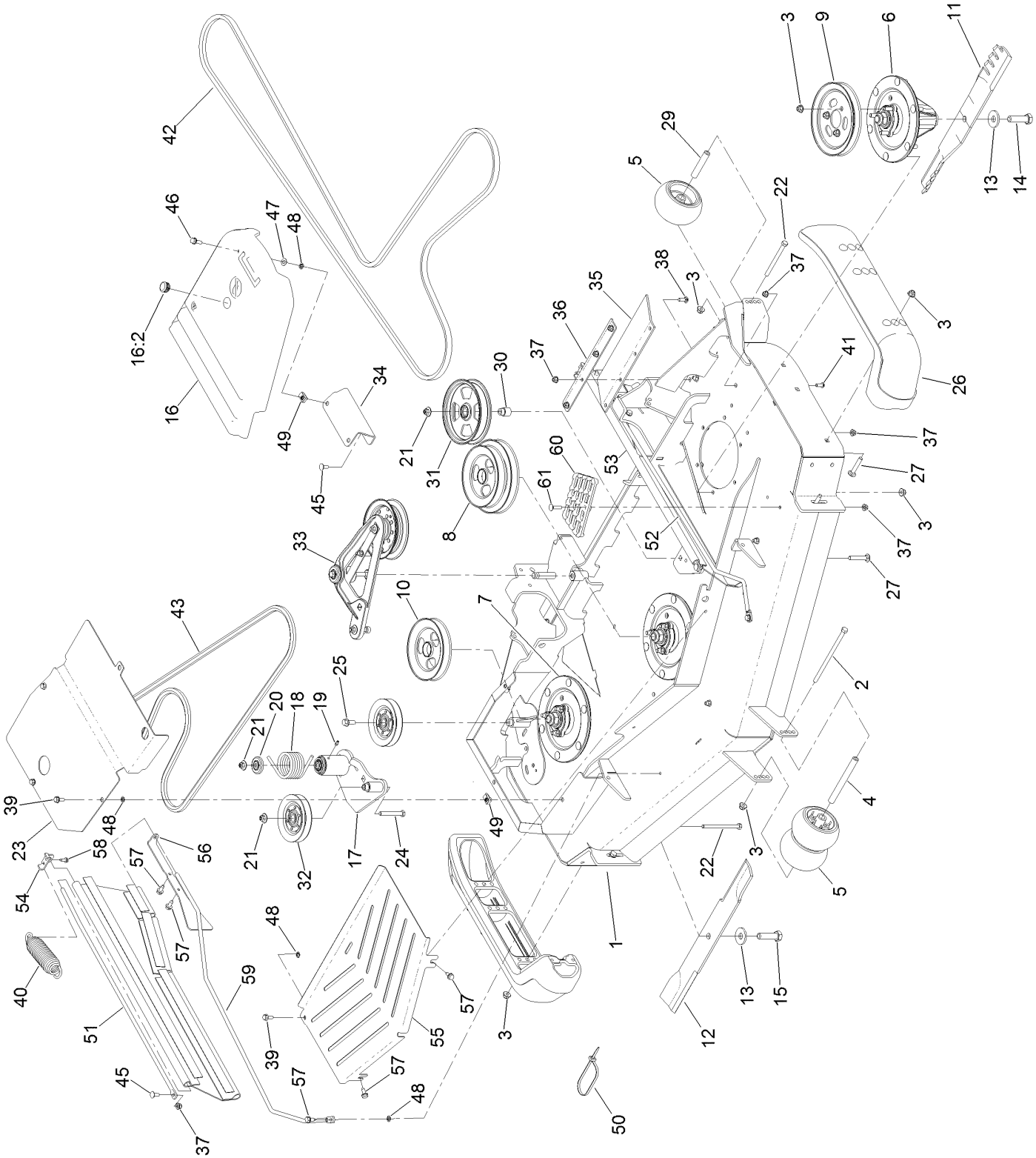

Deck Assembly (continued)

Ref.	Part Number	Qty.	Description
1	136-8629	1	Deck Decal ASM
2	108-5388	1	Screw-HH
3	104-8301	37	Nut-HF, NI
4	98-5967	1	Spacer-Wheel
5	1-603299	4	Roller-Scalp, Anti
6	127-0560	2	Spindle ASM
7	127-0570	1	LH Spindle ASM
8	125-9317	1	Pulley
9	105-7734	1	Pulley
10	125-9316	1	Pulley
11	105-8777-03	2	Blade-Atomic, 20.5In
12	125-9329-01	1	Blade-Rotary, 20.5In Low Flow
13	103-0865	3	Washer-Blade Bolt, Heavy
14	51-4060	2	Screw-Blade
15	125-9326	1	Screw-Blade, LH
16	117-7816	1	LH Belt Cover ASM
16:2	117-3824	1	Plug-Plastic
17	127-6659	1	Deck Idler ASM
18	108-1921	1	Spring-Torsion
19	302-19	1	Fitting-Grease
20	103-2916	1	Guard-Top
21	109-6658	3	Nut-Flange, NI
22	323-23	3	Screw-HH
23	131-3997-03	1	Cover-Spindle
24	323-13	1	Screw-HH
25	3234-11	1	Screw-HHF
26	112-1479	2	Skid-Bumper, Deck
27	3231-7	7	Screw-CARR
29	98-7912	2	Tube-Spanner
30	1-633456	1	Bushing, Idler
31	136-5404	1	Pulley-Idler, Flat
32	126-1478	2	Sheave
33	126-1720	1	Deck Idler ASM
34	114-5882-01	1	Bracket-Cover, Belt
35	116-8191	2	Guard-Tire
36	126-0413-01	2	Support-Outer Flap
37	104-8300	19	Nut-HF, NI
38	3230-16	8	Screw-CARR
39	3234-47	4	Screw-HHF
40	116-6317	1	Spring-Extension
41	3274-55	6	Screw-HSBH
42	125-9371	1	Belt
43	116-8187	1	Belt
45	3230-23	4	Screw-CARR
46	3234-29	1	Screw-HHF
47	73-0041	1	Washer-Thrust
48	117-2749	7	Nut-Push
49	94-2413	5	Nut-U
50	103-2446	2	Tie-Cable
51	131-3987	2	Rod-Support, Upper
52	132-5988	1	Rod Support Wldmnt, Lower-LH
53	131-4016	2	Guard Side
54	131-4194-03	2	Bracket-Mounting, Upper
55	131-3982-03	1	Shield-Front,
56	131-4197-03	2	Bracket-Mounting, Rear
57	32144-70	8	Screw-HWHTF
58	32144-10	2	Screw-HWH
59	132-5990	1	Rod Support Wldmnt, Lower-RH
60	126-4781-03	1	Step-Deck
61	3230-3	1	Screw-CARR

Deck Decal Assembly No. 136-8629

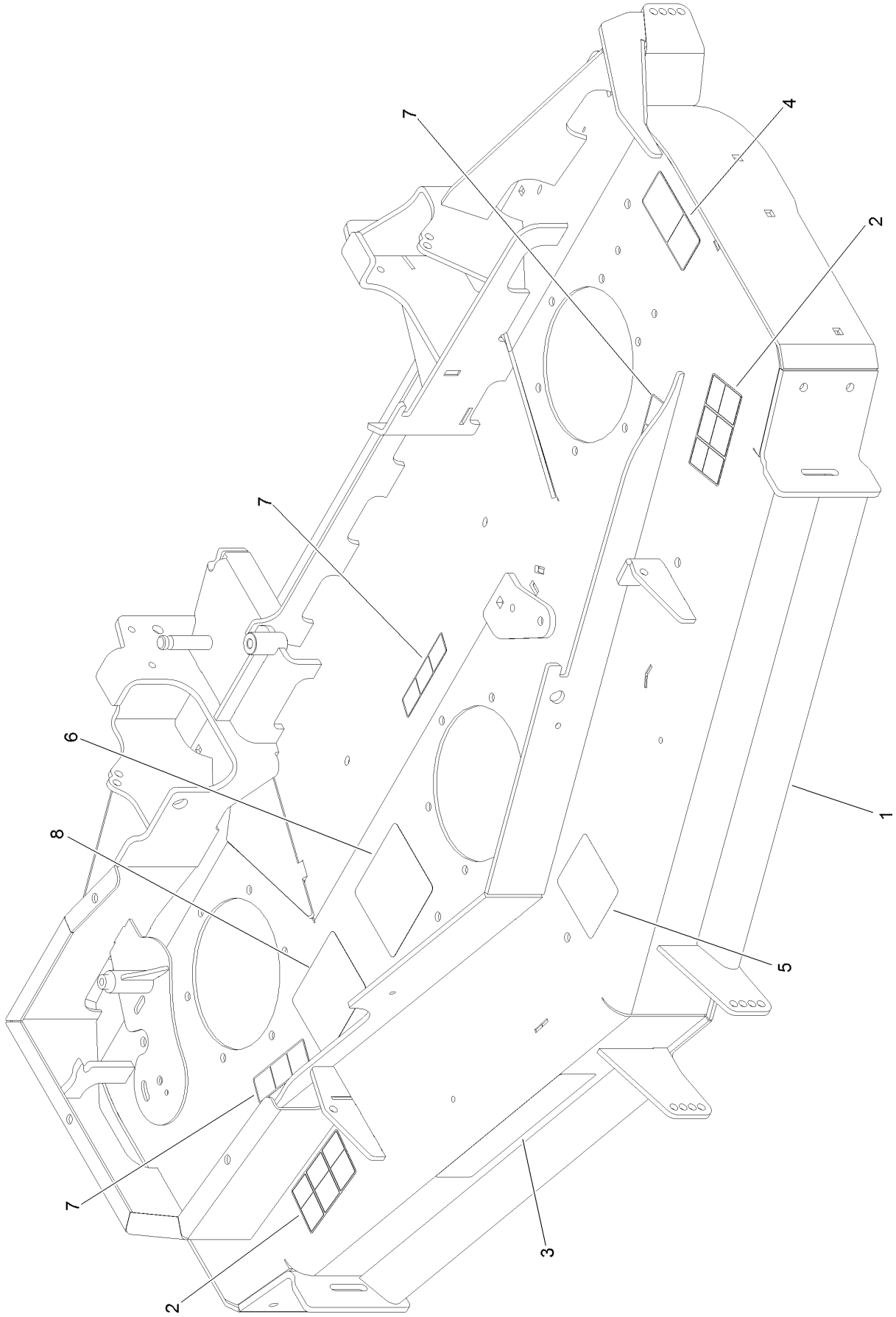

Deck Decal Assembly No. 136-8629 (continued)

Ref.	Part Number	Qty.	Description
1		1	Deck Decal ASM ●
2	117-3848	2	Decal-Danger
3	107-1619	1	Decal
4	93-7818	1	Decal-Torque, Blade Bolt
5	109-6036	1	Decal-Roller, Anti-Scalp
6	136-5522	1	Decal-Routing, Deck Belt
7	112-9028	3	Decal-Cover, Missing
8	127-6662	1	Decal-Spindle, Counter Rotating

● Not serviced separately

Spindle Assembly No. 127-0560

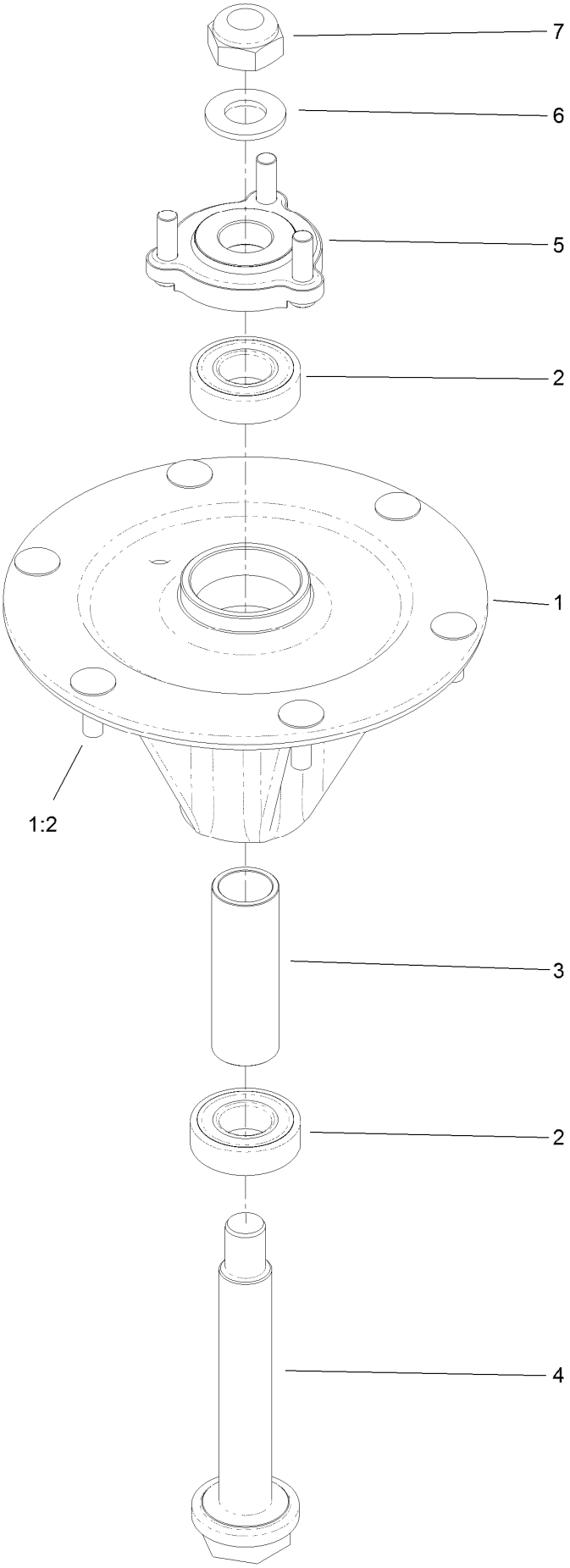

Spindle Assembly No. 127-0560 (continued)

Ref.	Part Number	Qty.	Description
1		1	Spindle Housing ASM W/Studs ●
1:2	114-8195	6	Bolt-Ribbed Neck
2	116-0720	2	Bearing-Ball
3	127-0554	1	Spacer-Bearing
4	127-0556	1	Shaft-Spindle, Ball Bearing
5	127-0557	1	Hub-Spindle (W/Studs)
6	92-5836	1	Washer
7	3296-67	1	Nut-Lock, NI

● Not serviced separately

LH Spindle Assembly No. 127-0570

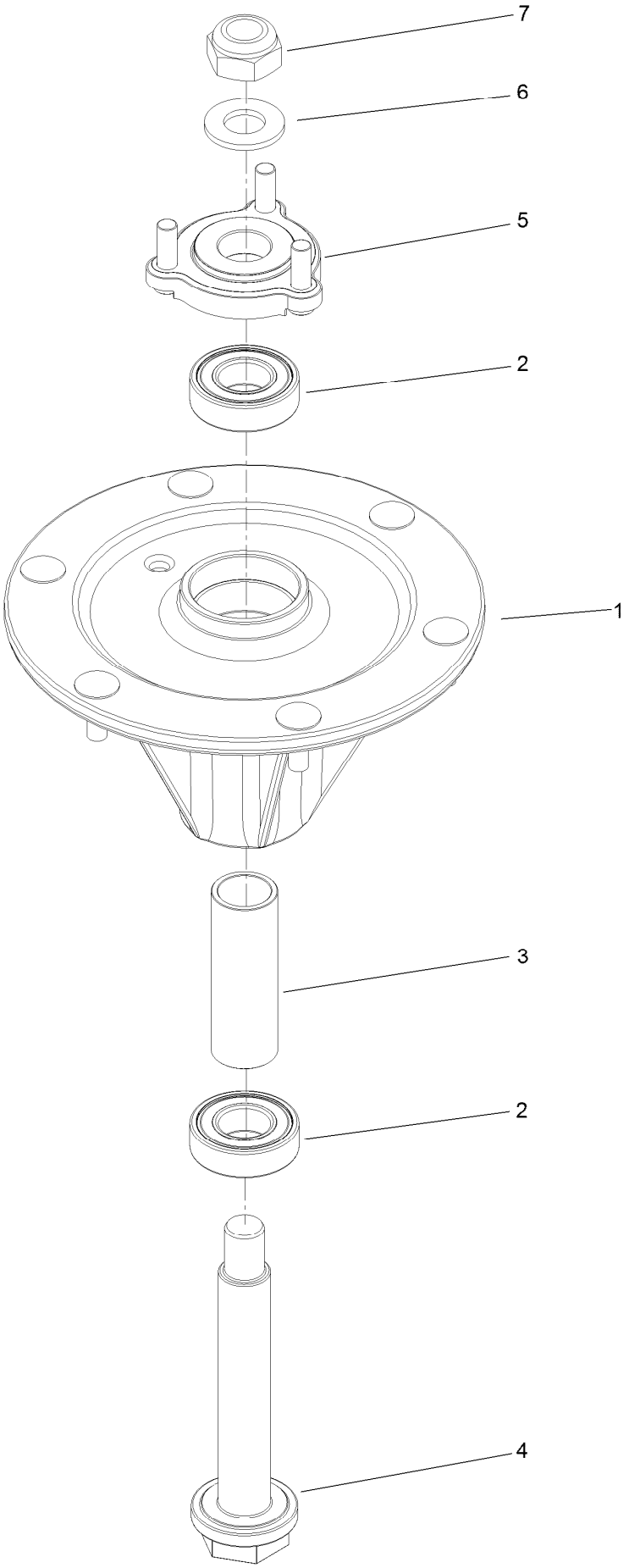

LH Spindle Assembly No. 127-0570 (continued)

Ref.	Part Number	Qty.	Description
1	127-0569	1	Housing-Spindle, LH (W/Studs)
2	116-0720	2	Bearing-Ball
3	127-0554	1	Spacer-Bearing
4	127-0567	1	Shaft-LH, Spindle-Ball Bearing
5	127-0557	1	Hub-Spindle (W/Studs)
6	92-5836	1	Washer
7	125-9325	1	Nut-Lock,NI Left Hand Thread

Idler Assembly No. 126-0853

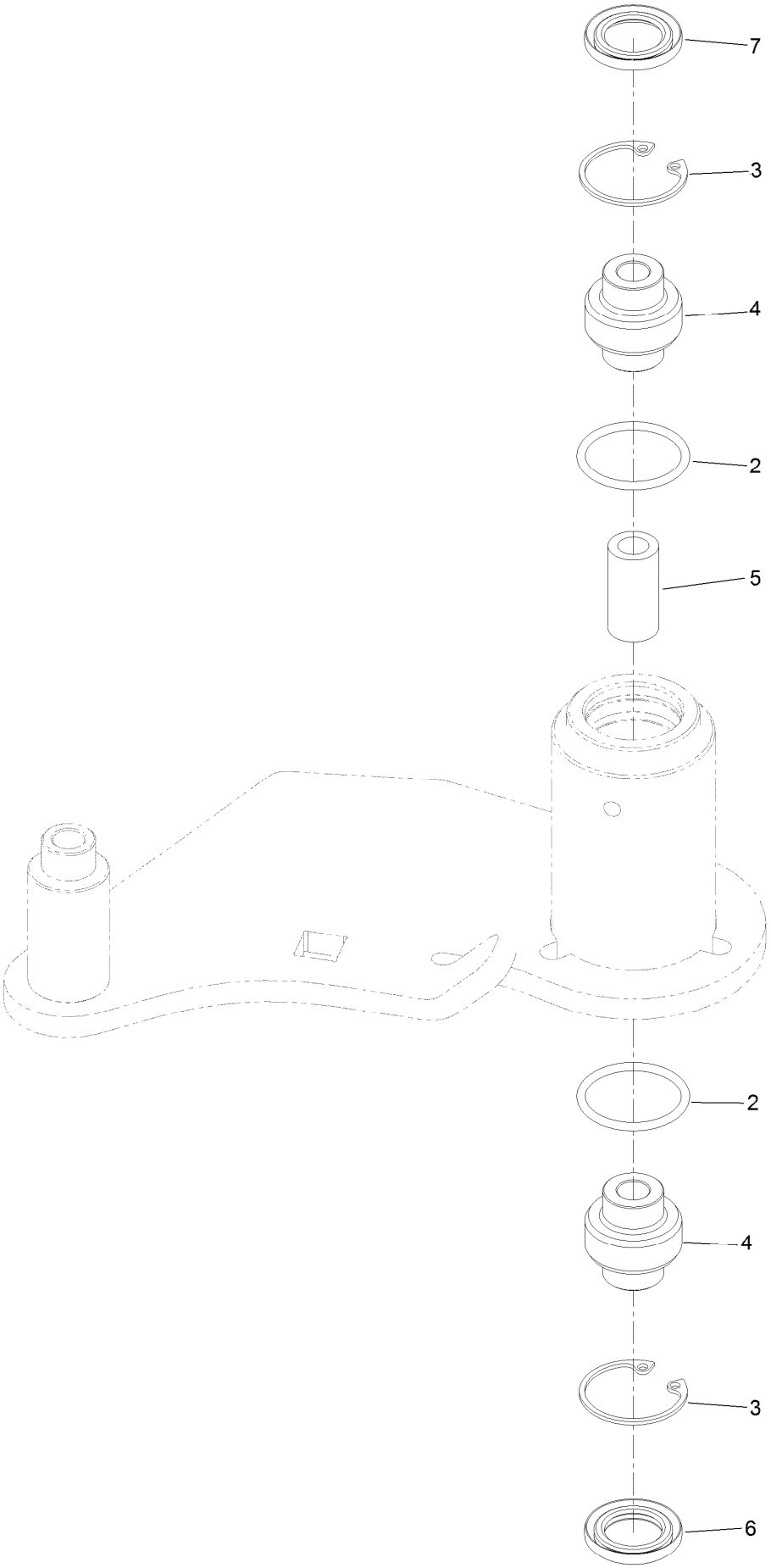

Idler Assembly No. 126-0853 (continued)

Ref.	Part Number	Qty.	Description
2	106-7159	2	O-Ring
3	32120-10	2	Ring-Snap
4	103-3504	2	Bearing-Spherical
5	108-6544	1	Spacer
6	103-3505	1	Seal-Lip, Double
7	103-3506	1	Seal-Lip, Single

Deck Idler Assembly No. 126-1720

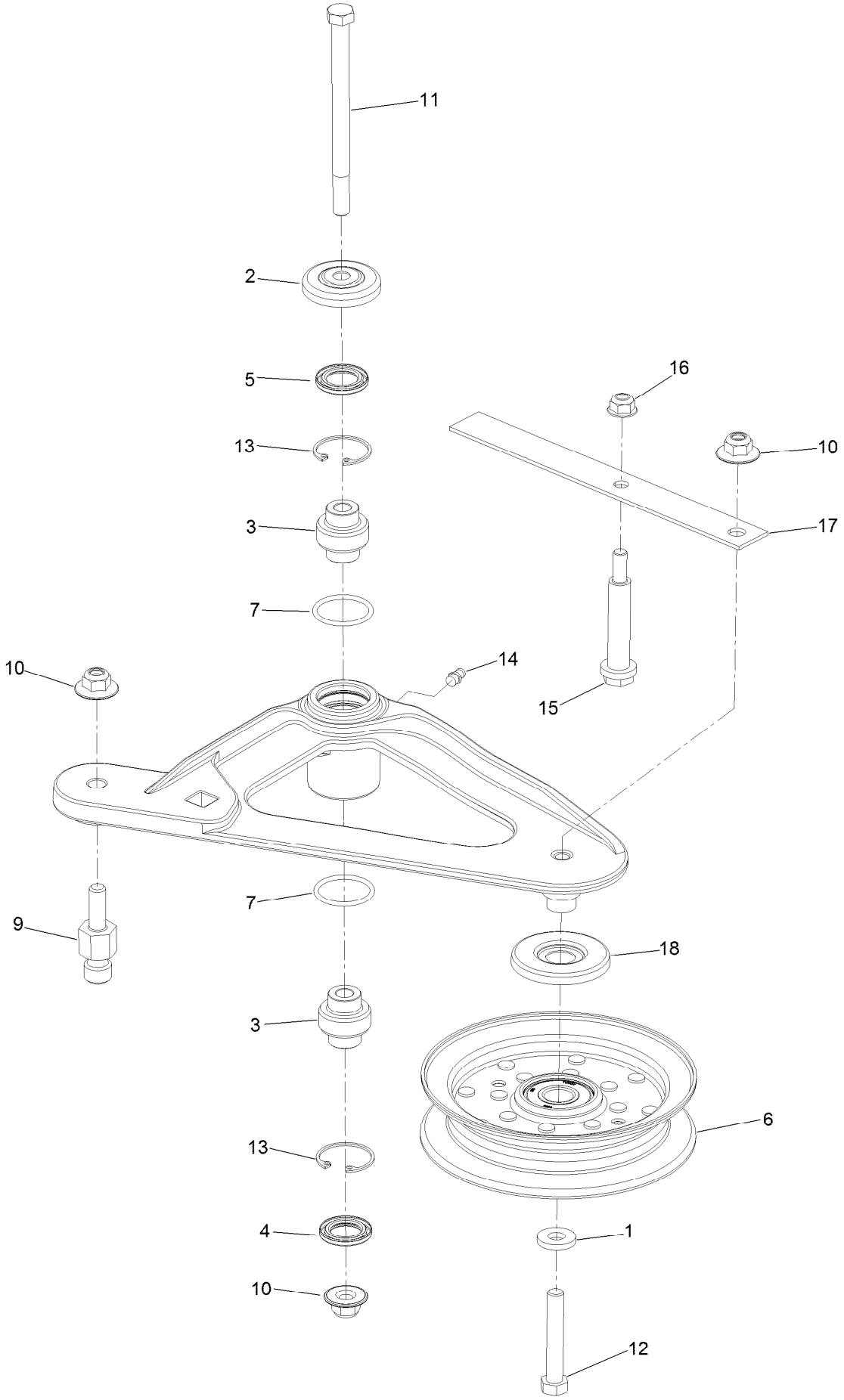

Deck Idler Assembly No. 126-1720 (continued)

Ref.	Part Number	Qty.	Description
1	43-0940	1	Spacer
2	103-2916	1	Guard-Top
3	103-3504	2	Bearing-Spherical
4	103-3505	1	Seal-Lip, Double
5	103-3506	1	Seal-Lip, Single
6	126-9196	1	Idler-Pulley, Flat
7	106-7159	2	O-Ring
9	126-0423	1	Pin-Spring, Anchor
10	109-6658	3	Nut-Flange, NI
11	109-7409	1	Screw-Shoulder, HH
12	104-3396	1	Screw-HH
13	32120-10	2	Ring-Snap
14	302-19	1	Fitting-Grease
15	88-4590	1	Bolt-Shoulder
16	104-8300	1	Nut-HF, NI
17	126-1704	1	Spring-Belt
18	126-9195	1	Shield-Guard, Dust

Frame Decal Assembly

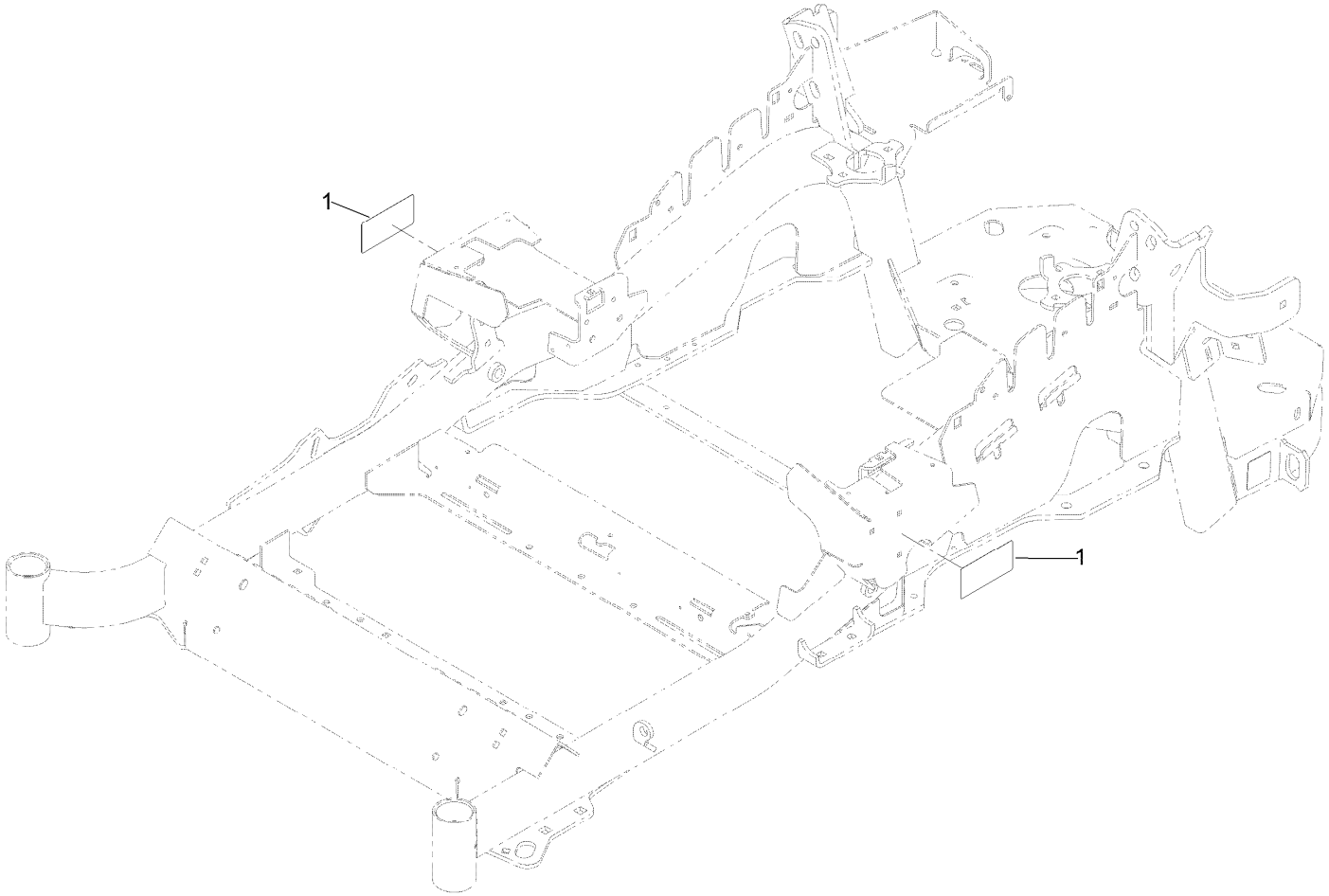

Frame Decal Assembly (continued)

Ref.	Part Number	Qty.	Description
1	120-5895	2	Decal

Attachments and Accessories

For 74942TE Z Master Professional 6000 Series Riding Mower with 152cm TURBO FORCE Rear Discharge Mower

Product Name	Model/Part
Deluxe Seat Kit	121-7595
Bimini Folding Shade Assembly	115-4510
Light Kit	116-1154
Hitch Kit	109-9487
Trash Holder Kit	TC26
Hypr-Oil 500 (quart)	114-4713
Hypr-Oil 500 (gallon)	114-4714
Hypr-Oil 500-5 (5 gallon)	114-4715
Blade-Atomic, 20.5in	105-8777-03
6 Pack-Blade, 20.5in Atomic	108-1115
Seat Cover W/arm rest	117-0095
Filter Minder Gauge	99-4664
Toro Deluxe Rider Cover	490-7319
Spark Arrestor Screen	75-6880
Baffle Kit	125-9305
Anti-Scalp and Wear Bar Kit	127-6650
Deck Skid Bumper	126-0854
Jack Mount Kit	127-6665
Counter Rotating Rotary Blade 20.5in Low Flow	125-9329-01
Jack Kit	127-6666

Notes:

TORO®

Count on it.