FORM NO. 3317–308 Rev. A

TORO®

Wheel Horse®

44" Recycler® Mower

for Lawn Tractor

Model No. 79105 – 5900001 & Up

Operator's Manual

IMPORTANT: Read this manual carefully. It contains information about your safety and the safety of others. Also become familiar with the controls and their proper use before you operate the product.

Litho in U.S.A.

Introduction

We want you to be completely satisfied with your new product, so feel free to contact your local Authorized Service Dealer for help with service, genuine replacement parts, or other information you may require.

Whenever you contact your Authorized Service Dealer or the factory, always know the model and serial numbers of your product. These numbers will help the Service Dealer or Service Representative provide exact information about your specific product. You will find the model and serial number plate located in a unique place on the product as shown below.

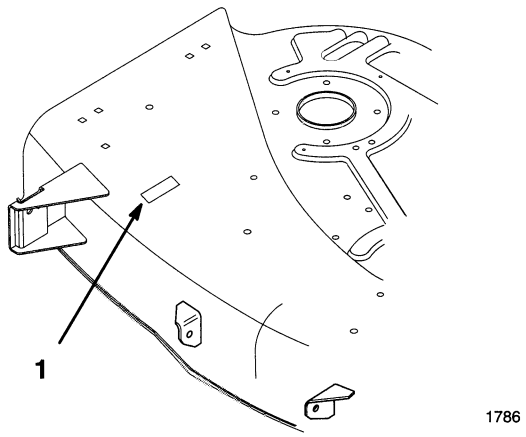

1. Model and Serial Number Plate

For your convenience, write the product model and serial numbers in the space below.

Model No: _____

Serial No. _____

The warning system in this manual identifies potential hazards and has special safety messages that help you and others avoid personal injury, even death. DANGER, WARNING and CAUTION are signal words used to identify the level of hazard. However, regardless of the hazard, be extremely careful.

DANGER signals an extreme hazard that will cause serious injury or death if the recommended precautions are not followed.

WARNING signals a hazard that may cause serious injury or death if the recommended precautions are not followed.

CAUTION signals a hazard that may cause minor or moderate injury if the recommended precautions are not followed.

Two other words are also used to highlight information. "Important" calls attention to special mechanical information and "Note" emphasizes general information worthy of special attention.

The left and right side of the machine is determined by sitting on the seat in the normal operator's position.

Printed in USA

Contents

	Page
Safety and Instruction Decals	2
Installation	3
Loose Parts	3
Mower Preparation	4
Installing the Mower	5
Side-to-Side Mower Leveling	8
Front-to-Rear Blade Slope	9
Removing the Mower	10
Installing the Recycler) Baffle	13
Removing the Recycler) Baffle	13
Operation	14
Side Discharge or Mulch Grass	14
Using the Blade Control (PTO)	14
Setting the Height-of-Cut	15
Adjusting the Gage Wheels	15
Tips for Mowing Grass	16
Maintenance	17
Service Interval Chart	17
Cutting Blade	17
Blade Drive Belt	19
Storage	20
Troubleshooting	21

Safety and Instruction Decals

Safety decals and instructions are easily visible to the operator and are located near any area of potential danger. Replace any decal that is damaged or lost.

ON MOWER RIGHT TOP AND UNDER DEFLECTOR (Part No. 93–1122)



ON MOWER LEFT SIDE (Part No. 66–1340)



NEXT TO GAGE WHEELS (Part No. 93–7282)

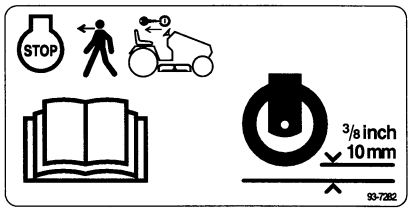

ON MOWER RIGHT SIDE (Part No. 93–3777)

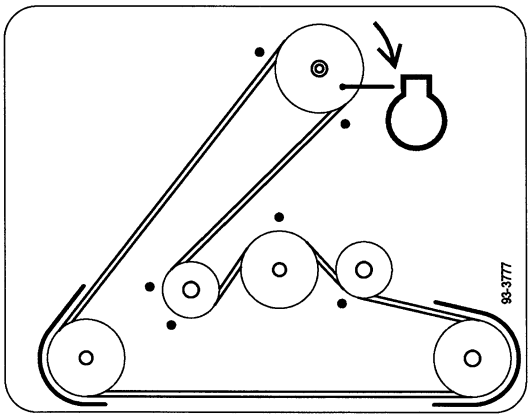

UNDER BELT COVERS (Part No. 68–3660)

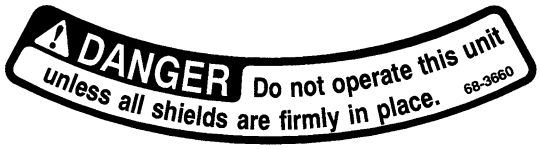

UNDER GRASS DEFLECTOR (Part No. 68–3650)



ALONGSIDE MOWER LIFT BRACKETS (Part No. 55–4300)

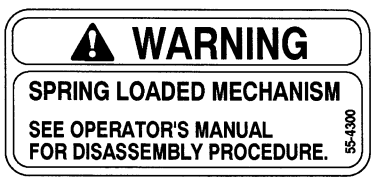

Installation

Loose Parts

Note: Use the chart below to identify parts used for assembly.

DESCRIPTION	QTY.	USE
Grass deflector	1	Install grass deflector
Spring	2	
Bolt 3/8–16 x 2-1/2"	2	
Lock nut 3/8"	2	
Gage wheel	2	Install gage wheels
Pin	2	
Hair pin cotter	2	
Mower mounting plate	1	Install front mount to mower
Shoulder bolt	2	
Lock nut 3/8"	2	
Bolt 5/16–18 x 2-1/2"	2	Install mower to tractor
Lock nut 5/16"	2	
Hairpin cotter	2	
Washer	2	
Jam nut	1	
Carriage bolt 3/8-16 x 1/2"	2	Fill open holes when Recycler® is removed
Washer	2	
Lock nut 3/8"	2	
Operator's Manual	1	Read before operating

Mower Preparation

1. Place springs into brackets on mower with hooked ends over raised back (Fig. 1).
2. Align grass deflector with holes in brackets and spring straight ends in space under hinge and above deflector (Fig. 1).
3. Secure deflector to bracket with bolts through grass deflector, springs and brackets. Secure with lock nuts (Fig. 1).
4. Lift grass deflector and check that it is spring loaded and pivots freely to the full down position.

   IMPORTANT: Grass deflector must be spring loaded in the down position. Lift deflector up to test that it snaps to the full down position.

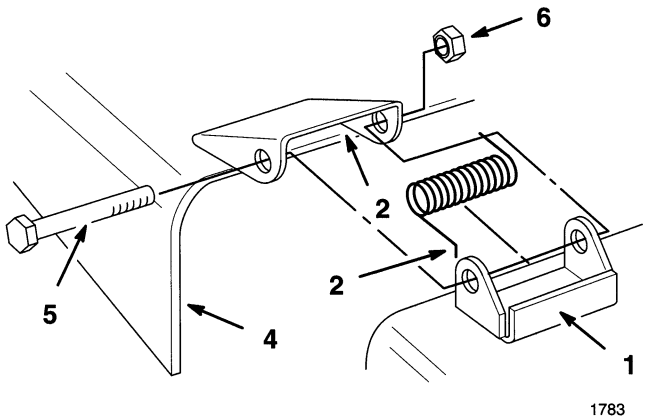

Figure 1

1. Bracket
2. Spring hook end
3. space for spring
4. Grass deflector
5. Bolt
6. Lock nut

5. Slide adjusting plate of gage wheel into mower gage wheel bracket and secure with pin and hair pin cotter (Fig. 23).

   Note: After installing mower onto tractor and adjusting height-of-cut. adjust gage wheels; refer to Adjusting the Gage Wheels, page 15.

6. Repeat adjustment on the other gage wheels.

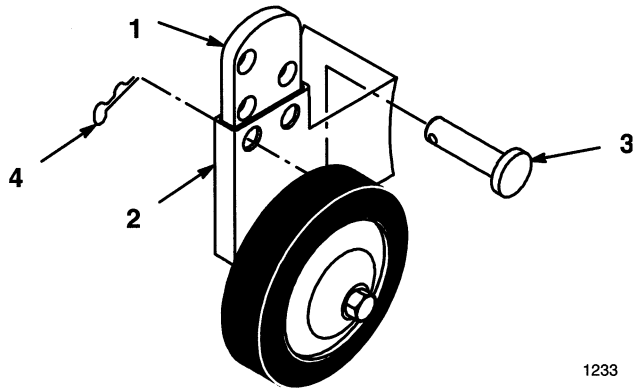

Figure 2

1. Plate
2. Bracket
3. Pin
4. Hair pin Cotter

7. Position mounting plate with tabs up, between brackets on the front of the mower (Fig. 3).
8. Insert shoulder bolts, through mounting plate into mower brackets. Secure with lock nuts (Fig. 3).

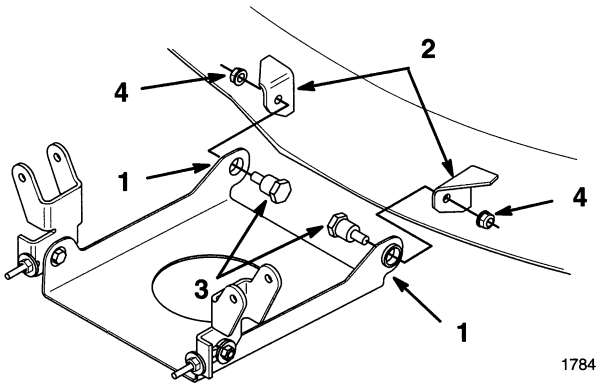

Figure 3

1. Tab up
2. Mower bracket
3. Shoulder bolt
4. Lock nut

Installing the Mower

⚠ DANGER

POTENTIAL HAZARD

- **Without the grass deflector, mulch baffle, or complete grass catcher assembly mounted in place, you and others are exposed to blade contact and thrown debris.**

WHAT CAN HAPPEN

- **Contact with rotating mower blade(s) and thrown debris will cause injury or death.**

HOW TO AVOID THE HAZARD

- **NEVER remove the grass deflector from the mower because the grass deflector routes material down toward the turf. If the grass deflector is ever damaged, replace it immediately.**
- **Never put your hands or feet under the mower.**
- **Never try to clear discharge area or mower blades unless you move the power take off (PTO) to "OFF" and rotate the ignition key to "OFF." Also remove the key and pull the wire off the spark plug(s).**

1. Park the machine on a level surface, disengage the blade control (PTO), set the parking brake, and turn the ignition key to "OFF" to stop the engine. Remove the key.

2. Turn the front wheels fully to the left. Slide the mower under the chassis from the right side.

3. Install mower belt onto the lower engine pulley (Fig. 4). If you are careful, you can flex the belt guide(s) just far enough away from the pulley to install the belt. If it is too difficult to install the belt, loosen the bolts and nuts securing the belt guides.

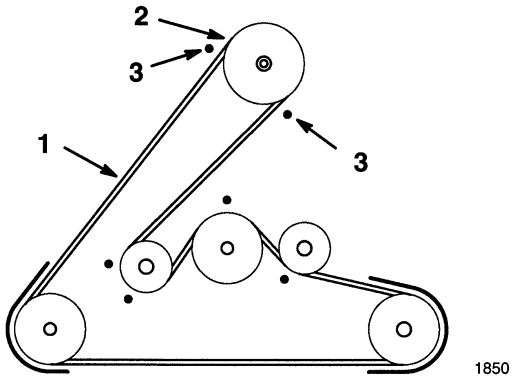

Figure 4

Top View

1. Mower belt
2. Engine pulley
3. Belt guide

IMPORTANT: Do not bend the belt guides away from the pulley. There must be a maximum 1/8" (3.175 mm) between the belt guide and the edge of the pulley to keep the belt on the pulley during operation. If the space is more than 1/8" (3.175 mm), adjust the belt guide(s) and tighten them securely. The belt guide must not contact the pulley.

4. Install the mower pivot mount brackets onto the front axle with bolts and lock nuts (Fig. 5).

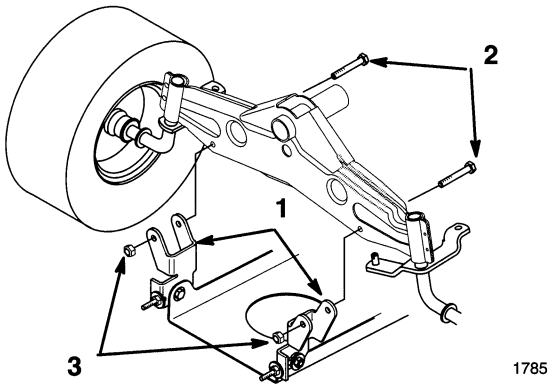

Figure 5

1. Pivot mount bracket
2. Bolt 5/16–18 x 2-1/2"
3. Lock nut

5. Remove the lift assist spring between the mower right side lift bracket and the retaining bolt (Fig. 6) Use the spring tool provided with the machine.

6. Move the height-of-cut lever (deck lift) into the "A" notch.

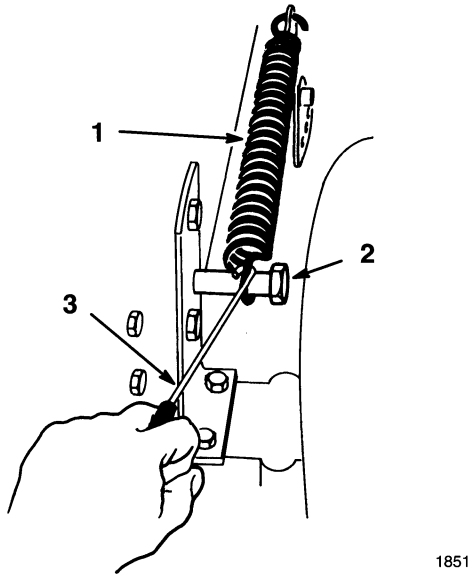

Figure 6

1. Spring
2. Bolt
3. Spring tool

7. Slide the end of the long rod through the hole in the mower mount (Fig. 7). Install the washer and hair pin cotter to secure the rod in place. Repeat this step on the opposite side of the mower.

8. Mount the slotted mower leveling bracket onto the pin on the mower mount (Fig. 7). Install the washer and hair pin cotter to secure the mower. Repeat this step on the opposite side of the mower.

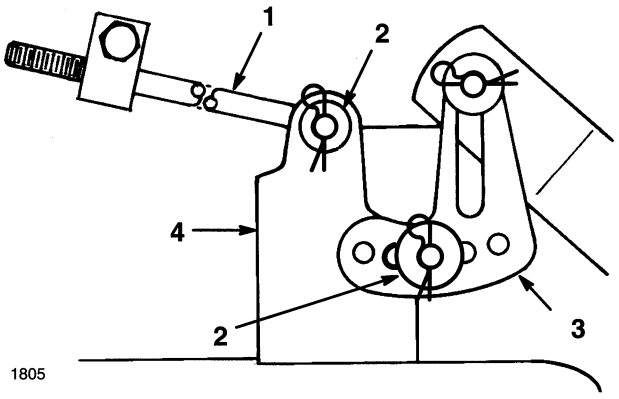

Figure 7

1. Rod
2. Hair pin cotter and washer
3. Leveling bracket
4. Mower mount

9. Look under tractor and take down blade control (PTO) cable nested inside frame rail.

10. Thread first jam nut onto the blade control (PTO) cable all the way. Rout cable through slot in deck bracket and thread second jam nut onto cable (Fig. 8).

11. Hook Z end of blade control (PTO) cable into bellcrank arm (Fig. 8).

12. Engage blade control (PTO) lever on dash. Measure distance between Z end of cable and mounting bracket (Fig. 8). Adjust jam nuts so 2–1/2" (63.5 mm) dimension is obtained (Fig. 8).

13. Tighten jam nuts securely and disengage blade control (PTO).

14. Check that blade brake pads contact pulleys and actuating rods are loose when blade control (PTO) is disengaged, and that brake pads are away from pulleys when blade control (PTO) is engaged.

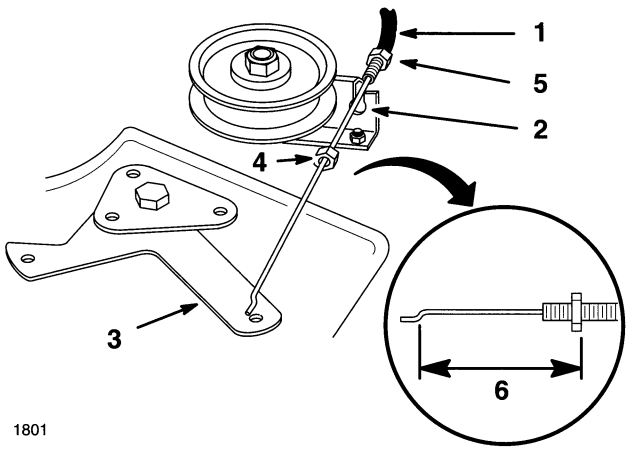

Figure 8

1. Blade control cable
2. Mounting bracket slot
3. Cable Z end
4. Idler arm
5. Jam nut
6. 2–1/2" (63.5 mm) Engaged

15. Move the height-of-cut lever (deck lift) into the "D" notch to make it easier to install the height-of-cut lift assist spring.

16. Hook the lift assist spring between the mower right side lift bracket and the retaining bolt (Fig. 9) Use the spring tool provided with the machine.

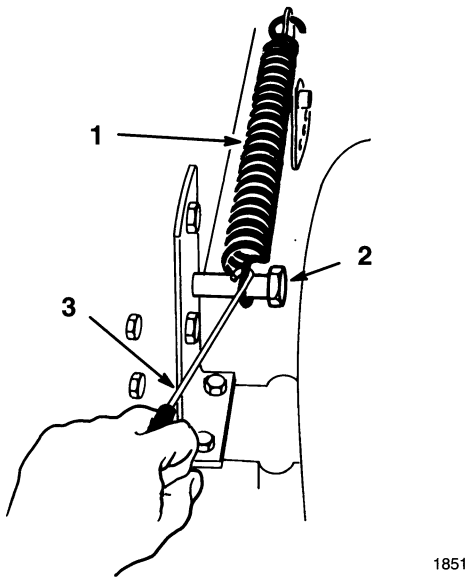

Figure 9

1. Spring
2. Bolt
3. Spring tool

17. Check mower level; refer to Side-to-Side Mower Leveling page 8, and Front-to-Rear Blade Leveling page 9.

Side-to-Side Mower Leveling

The mower blades must be level from side to side. Check the side-to-side level any time you install the mower or when you see an uneven cut on your lawn. Before you level the mower, set the air pressure in the front and rear tires, refer to the tractor Operator's Manual for correct tire pressure.

1. Park the machine on a level surface, disengage the blade control (PTO), set the parking brake, and turn the ignition key to "OFF" to stop the engine. Remove the key.

2. Move the height-of-cut lever (deck lift) into the "C" notch.

3. Carefully rotate blade(s) side to side (Fig. 10). Measure between the outside cutting edges and the flat surface (Fig. 10). If both measurements are not within 3/16" (4.762mm), an adjustment is required; refer to steps 4 and 5.

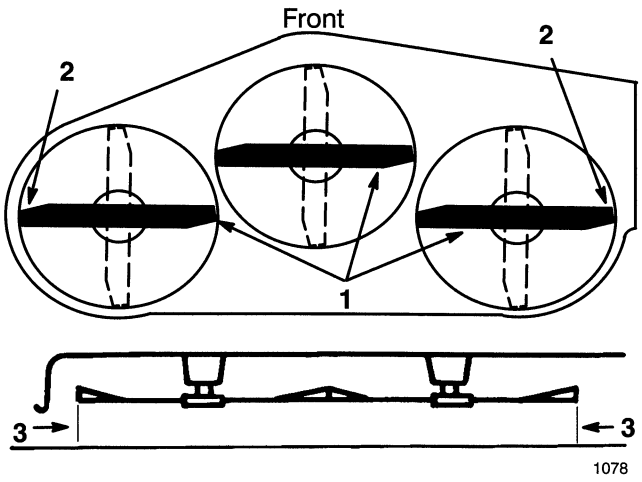

Figure 10

1. Blades side to side
2. Outside cutting edges
3. Measure here

4. Remove the hair pin cotter and washer from the leveling bracket (Fig. 11). To level the blade(s), reposition the leveling bracket in a different hole and install the washer and hair pin cotter. (Fig. 11). A front hole lowers the blade height and a rear hole raises its height. Adjust both sides as required.

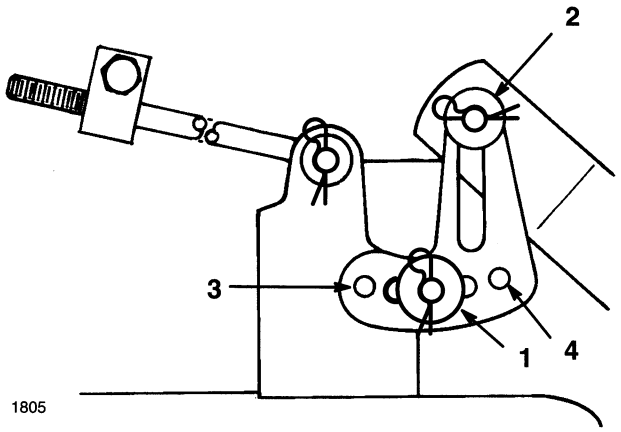

Figure 11

1. Hair pin cotter and washer
2. Leveling bracket
3. Front hole
4. Rear hole

5. Check the front-to-rear blade slope; refer to Front-to-Rear Blade Slope, page 9.

Front-to-Rear Blade Slope

Check the front-to-rear blade slope any time you install the mower. Before you check the slope, set the air pressure in the front and rear tires, refer to the tractor Operator's Manual for correct tire pressure. If the front of the mower is more than 3/16" (4.762mm) lower than the rear of the mower, adjust the blade slope using the following instructions:

1. Park the machine on a level surface, disengage the blade control (PTO), set the parking brake, and turn the ignition key to "OFF" to stop the engine. Remove the key.

2. Check and adjust side-to-side blade level if you have not checked the setting; refer to Side-to-Side Mower Leveling, page 8.

3. Measure the length of the rod extending out the front of the adjusting block on the sides of the chassis (Fig. 12). If the rod length is not 5/8" (15.875 mm), remove the hair pin cotter and washer from the end of the rod (Fig. 12), and turn the rod until the 5/8" (15.875 mm) dimension is obtained. Then install the end of the rod into the hole in the mower mount and secure in place with washer and hair pin cotter. Repeat this procedure on the opposite side of the mower.

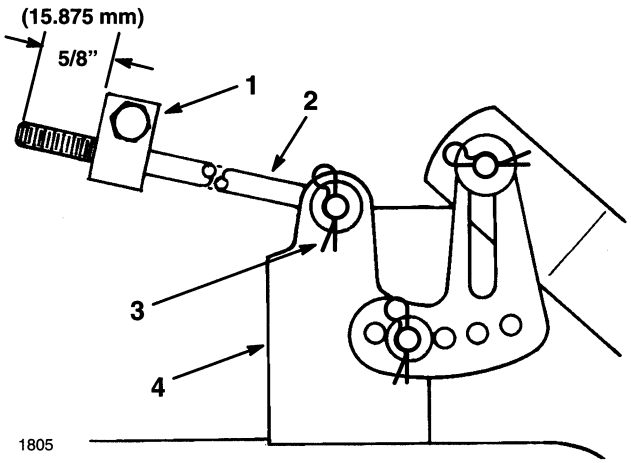

Figure 12

1. Hair pin cotter and washer
2. Leveling bracket
3. Front hole
4. Rear hole

4. Move the height-of-cut lever (deck lift) into the "C" notch and carefully rotate the blades so they are facing front to rear (Fig. 13).

5. Measure between the tip of the front blade (Fig. 13) and the tip of the rear blade to the flat surface. If the front blade tip is not 0–1/8" (0-3.2 mm) lower than the rear blade tip an adjustment front mower mounting plate at axle (Fig. 13).

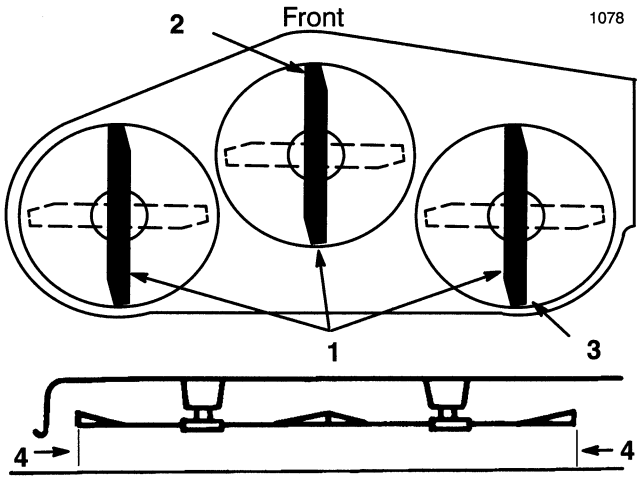

Figure 13

1. Blade front to rear
2. Measure front blade tip
3. Measure rear blade tip
4. Measure here

6. To adjust front-to-rear blade slope loosen front pivot plate mounting bolts slightly (Fig. 14).

7. Rotate lock nuts on eyebolts to change adjustment (Fig. 14).To raise the front of the mower tighten the eyebolt lock nuts. To lower the front of the mower loosen the eyebolt lock nuts.

8. After adjusting both eyebolt lock nuts evenly, check the front-to-rear slope again. Continue adjusting eyebolts until the front blade tip is 0-3/8" (0-9.2 mm) lower than the rear blade tip (Fig. 14).

9. When front-to-rear slope is correct, tighten the pivot plate mounting bolts (Fig. 14).

10. When front-to-rear blade slope is correct, recheck the side-to-side level of the mower; refer to Side-to-Side Mower Leveling, page 8.

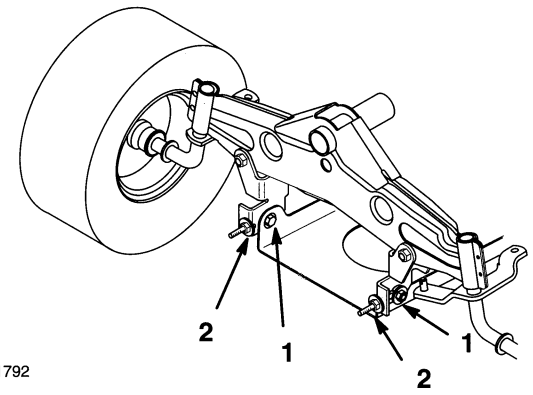

Figure 14

1. Pivot mounting bolt
2. Eyebolt lock nut

11. Check gage wheel height; refer to Adjusting Gage Wheels, page 15.

Removing the Mower

1. Park the machine on a level surface, disengage the blade control (PTO), set the parking brake, and turn the ignition key to "OFF" to stop the engine. Remove the key.

2. Move the height-of-cut lever (deck lift) into the "D" notch.

3. Remove the height-of-cut lift assist spring from the retaining bolt (Fig. 15), using the spring tool provided with the machine. The spring is between the frame and the right rear wheel.

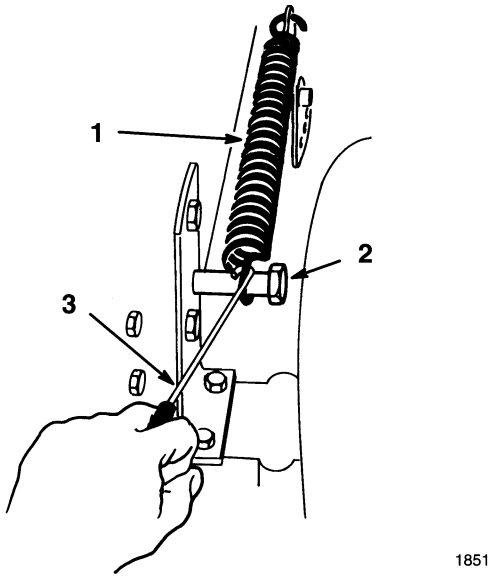

Figure 15

1. Spring
2. Bolt
3. Spring tool

4. Move the height-of-cut lever (deck lift) into the "A" notch.

5. Unhook the blade control (PTO) cable Z end from the idler arm on the mower (Fig. 16).

6. Remove jam nut from blade control (PTO) at mounting bracket. Slide the cable from the bracket and re-install jam nut for safekeeping (Fig. 16).

7. Move the cable out of the way and lay inside frame rail so it cannot get caught in drive belts or pulleys.

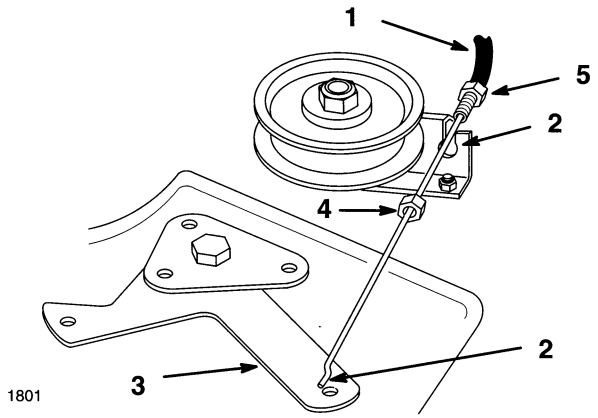

Figure 16

1. Blade control (PTO) cable
2. Z end
3. Idler arm
4. Jam nut
5. Mounting bracket

8. Remove the bolts and lock nuts and pull the two mower pivot mount brackets down from the front axle (Fig. 17).

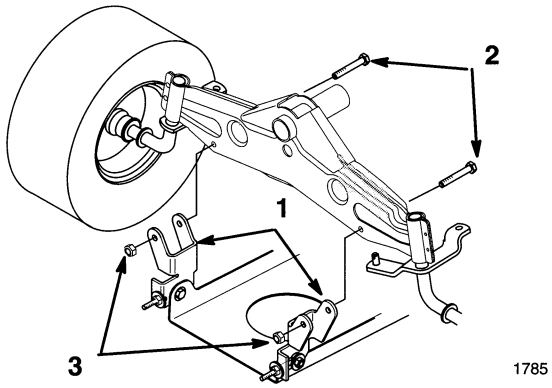

Figure 17

1. Pivot mount bracket
2. Bolt 5/16–18 x 2-1/2"
3. Lock nut

9. Remove the hair pin cotter and washer from the end of the long rod (Fig. 18). Slide the rod out of the mower mount.

10. Remove the hair pin cotter and washer at the mower leveling bracket (Fig. 18). Slide the bracket off the mounting pin. Re-install the washer and hairpin cotter for storage.

11. Rotate the leveling bracket up, toward the frame, and hook the long rod into one of the holes to store. Secure long rod with washer and hairpin cotter.

12. Repeat steps 9–11 on the opposite side of the mower.

13. Move the height-of-cut lever (deck lift) into the "D" notch. Hook lift assist spring onto retaining bolt for storage (Fig. 15).

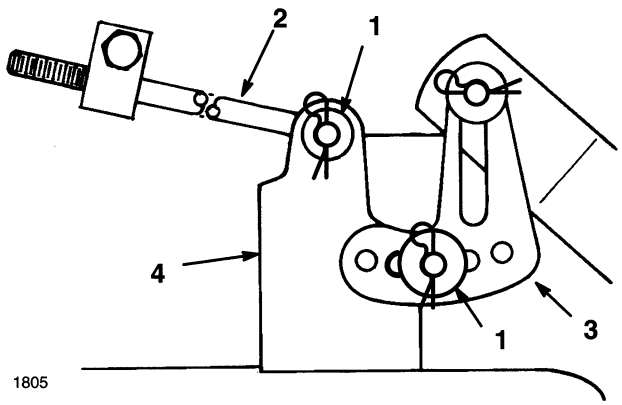

Figure 18

1. Hair pin cotter and washer
2. Long rod
3. Leveling bracket
4. Mower mount

14. Remove the mower belt from the engine pulley (Fig. 19). If you are careful, you can flex the belt guide(s) just far enough away from the pulley to remove the belt. If it is too difficult to remove the belt, loosen the bolts and nuts securing the belt guides. Tighten bolts.

IMPORTANT: Do not bend the belt guide(s) away from the pulley because the belt will not operate properly when the mower is installed later.

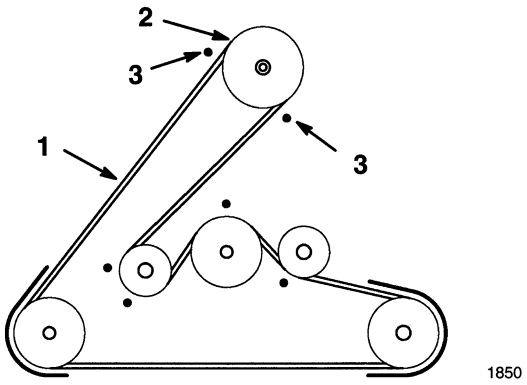

Figure 19

Top View

1. Mower belt
2. Engine pulley
3. Belt guides

15. Turn the front wheels fully to the left. Slide the mower out to the right to complete removal.

Installing the Recycler® Baffle

1. Remove the mower from tractor; refer to Removing the Mower, page 10.
2. Thoroughly clean the mower. All debris must be removed to ensure baffle will fit properly against cutting chamber.
3. Tip the mower upside down and block up ends to ease installation of recycler baffle.
4. Place the baffle inside cutting chamber.
5. Secure the baffle to mower with 3/4" bolts from outside of deck through front brackets (Fig. 20). Secure with lock nuts.
6. Secure baffle to mower with 3/4" bolt from outside of deck through bracket at discharge chute (Fig. 20). Secure with lock nut.
7. Secure baffle to left side of mower with 3/4" bolt through from outside of deck (Fig. 20). Secure with lock nut.
8. Tighten all mounting hardware securely.
9. Rotate blades to assure there is at least 1/8" clearance between blades and baffle.
10. Install mower onto tractor; refer to Installing the Mower, page 5.

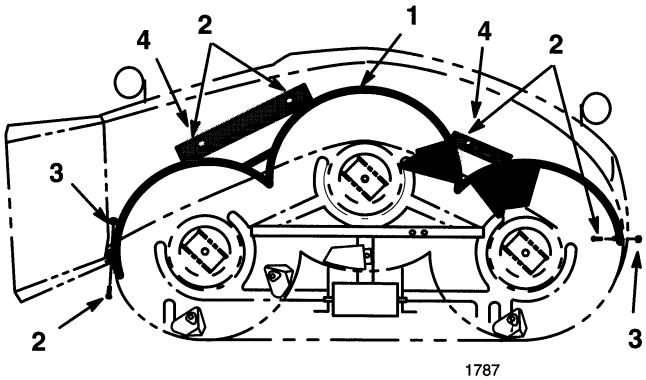

Figure 20

1. Baffle
2. Bolt 3/4"
3. Lock nut
4. Fill open hole when Recycler® is removed

Removing the Recycler® Baffle

1. Remove the mower from tractor; refer to Removing the Mower, page 10.
2. Thoroughly clean the mower.
3. Tip the mower upside down and block up ends to ease removal of baffle.
4. Remove 3/4" bolts through front brackets (Fig. 20).
5. Remove 3/4" bolt through bracket at discharge chute (Fig. 20).
6. Remove 3/4" bolt through baffle at left side of mower (Fig. 20).
7. Remove baffle from inside cutting chamber.
8. Install (2) 3/8-16 x 1/2" carriage bolts, from inside out, to fill open holes of mower for safety. Secure with washers and 3/8 lock nuts (Fig. 20).

⚠ DANGER

POTENTIAL HAZARD

- **Open holes in the mower expose you and others to thrown debris.**

WHAT CAN HAPPEN

- **Debris thrown out of holes in the mower can cause injury.**

HOW TO AVOID THE HAZARD

- **Never operate mower without hardware mounted in all holes in mower.**
- **Install hardware in mounting holes when recycle baffle is removed.**

9. Install the mower onto tractor; refer to Installing the Mower, page 5.

Operation

Side Discharge or Mulch Grass

⚠ DANGER

POTENTIAL HAZARD

- **Without the grass deflector, mulch baffle, or complete grass catcher assembly mounted in place, you and others are exposed to blade contact and thrown debris.**

WHAT CAN HAPPEN

- **Contact with rotating mower blade(s) and thrown debris will cause injury or death.**

HOW TO AVOID THE HAZARD

- **NEVER remove the grass deflector from the mower because the grass deflector routes material down toward the turf. If the grass deflector is ever damaged, replace it immediately.**
- **Never put your hands or feet under the mower.**
- **Never try to clear discharge area or mower blades unless you move the power take off (PTO) to "OFF" and rotate the ignition key to "OFF." Also remove the key and pull the wire off the spark plug(s).**

1. The mower has a hinged grass deflector that disperses clippings to the side and down toward the turf.
2. To mulch grass clippings you must install the Recycler® baffles (optional on some models) into the mower; refer to Installing the Recycler® Baffle, page 13.

Using the Blade Control (PTO)

The blade control (PTO) engages and disengages power to the blade(s).

Engaging the Blade(s)

1. Depress the brake pedal to stop the machine.
2. Move the blade control (PTO) to "ENGAGED" (Fig. 21).

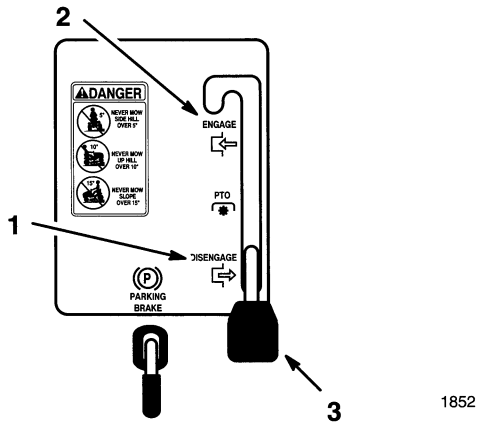

Figure 21

1. Disengaged
2. Engaged
3. Blade control (PTO)

Disengaging the Blade(s)

1. Depress the brake pedal to stop the machine.
2. Move the blade control (PTO) to "DISENGAGED" (Fig. 21).

Setting the Height-of-Cut

The height-of-cut lever (deck lift) is used to raise and lower the mower to the desired cutting height.

1. The cutting height may be set in one of seven positions from approximately 1-1/2 to 4-1/2 inches (38 to 116 mm).
2. Pull on the height-of-cut lever (deck lift) and move it to the desired position (Fig. 22).

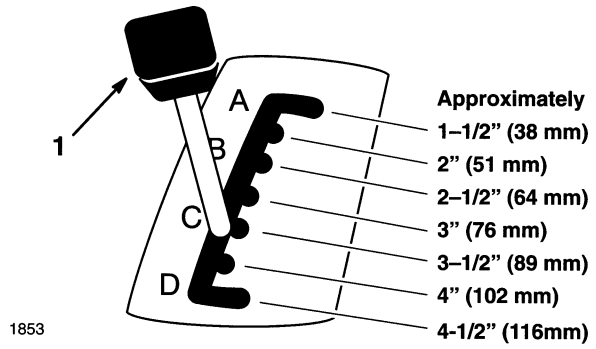

Figure 22

1. Height-of-cut lever (deck lift)

3. After adjusting height-of-cut adjust gage wheels; refer to Adjusting the Gage Wheels, page 15.

Adjusting the Gage Wheels

The gage wheels must be adjusted in the proper hole location for each height-of-cut position.

1. After adjusting height-of-cut. raise the height-of-cut lever; refer to Setting the Height-of-Cut, page 15.
2. Remove hairpin cotter and pin to change hole location (Fig. 23).
3. Select a hole position so the gage wheel is 3/8" (9.5 mm) off the ground for the height-of-cut to be used (Fig. 23).
4. Insert pin and secure with hairpin cotter.
5. Repeat adjustment on the other gage wheels.

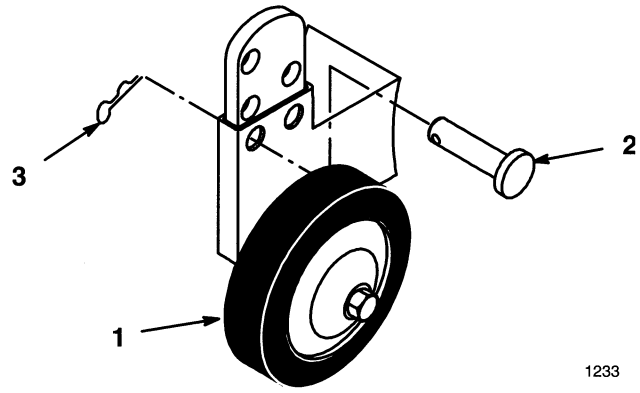

Figure 23

1. Wheel
2. Pin
3. Hair pin Cotter

Tips for Mowing Grass

Fast Throttle Setting

For best mowing and maximum air circulation, operate the engine at "FAST." Air is required to thoroughly cut grass clippings, so do not set the height-of-cut so low, as to totally surround the mower by uncut grass. Always try to have one side of the mower free from uncut grass, which allows air to be drawn into the mower.

Cutting a Lawn for the First Time

Cut grass slightly longer than normal to ensure the cutting height of the mower does not scalp any uneven ground. However, the cutting height used in the past is generally the best one to use. When cutting grass longer than six inches tall, you may want to cut the lawn twice to assure an acceptable quality-of-cut.

Cut 1/3 of the Grass Blade

It is best to cut only about 1/3 of the grass blade. Cutting more than that is not recommended, unless grass is sparse or it is late fall when grass grows more slowly.

Mowing Direction

Alternate mowing direction to keep the grass standing straight. This also helps disperse clippings which enhances decomposition and fertilization.

Mow at Correct Intervals

Normally, mow every 4 days. But remember, grass grows at different rates at different times. So to maintain the same cutting height, which is a good practice, mow more often in early spring. As the grass growth rate slows in mid summer, mow less frequently. If you cannot mow for an extended period, first mow at a high cutting height; then mow again 2 days later at a lower height setting.

Avoid Cutting Too Low

If the cutting width of the mower is wider than the mower you previously used, raise the cutting height to ensure uneven turf is not cut too short.

Long Grass

If the grass is ever allowed to grow slightly longer than normal, or if it contains a high degree of moisture, raise the cutting height higher than usual and cut the grass at this setting. Then cut the grass again using the lower, normal setting.

When Stopping

If the machine's forward motion must be stopped while mowing, a clump of grass clippings may drop onto your lawn. To avoid this:

1. With the blade(s) "ENGAGED," move onto a previously cut area.
2. To disperse the clippings evenly, raise the mower one or two height-of-cut settings while driving forward with the blade(s) "ENGAGED."

Keep the Underside of the Mower Clean

Clean clippings and dirt from the underside of the mower after each use. If grass and dirt build up inside the mower, cutting quality will eventually become unsatisfactory.

Blade Maintenance

Maintain a sharp blade throughout the cutting season because a sharp blade cuts cleanly without tearing or shredding the grass blades. Tearing and shredding turns grass brown at the edges, which slows growth and increases the chance of disease. Every 30 days, check the cutter blade(s) for sharpness and file down any nicks.

Maintenance

Service Interval Chart

Service Operation	Each Use	5 Hours	25 Hours	Storage Service	Spring Service	Notes
Cutter Blade—check		X	X	X		
Belts—check for wear/cracks				X		
Mower Housing—clean	X	X		X		
Chipped Surfaces—paint				X		

Cutting Blade

To assure a superior quality of cut, keep the blade(s) sharp. For convenient sharpening and replacement, you may want to have an extra blade(s).

⚠ WARNING

POTENTIAL HAZARD

- **A blade that is worn or damaged could break apart and pieces could be thrown at bystanders or at you as you use the mower.**

WHAT CAN HAPPEN

- **Pieces of blade that may be thrown could seriously injure or kill you or bystanders.**

HOW TO AVOID THE HAZARD

- **Periodically inspect the blade for wear and damage. Immediately install a new blade if it is worn or damaged.**

Inspecting the Blade(s)

1. Remove the mower; refer to Removing the Mower, page 10.
2. Inspect the cutting edges (Fig. 24). If the edges are not sharp or have nicks, remove the blade(s) and sharpen them; refer to Sharpening the Blade(s), page 18.
3. Inspect the blade(s), especially the curved area (Fig. 24). If you notice any damage, wear, or a slot forming in this area (Fig. 24), immediately install a new blade.

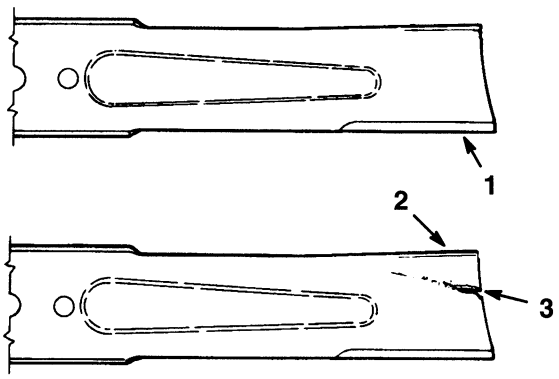

151

Figure 24

1. Cutting edge
2. Curved area
3. Wear/slot forming

Removing the Blade

1. Remove the mower; refer to Removing the Mower, page 10.
2. Carefully tip the mower over.
3. Remove the bolt, belleville washer and blade (Fig. 25). A block of wood may be wedged between the blade and the mower to lock the blade when you are removing the bolt.
4. Inspect all parts. If a defect or damage is noticed, install new parts.

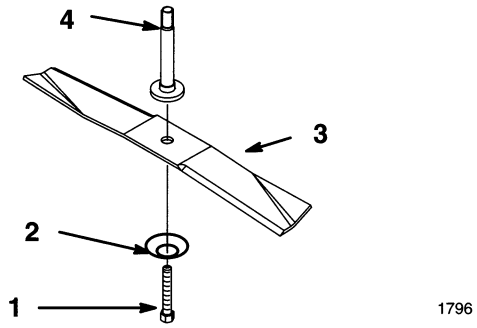

Figure 25

1. Nut
2. Belleville washer
3. Blade
4. Spindle

Sharpening the Blade(s)

1. Use a file to sharpen the cutting edge at both ends of the blade (Fig. 26). Maintain the original angle. The blade retains its balance if the same amount of material is removed from both cutting edges.

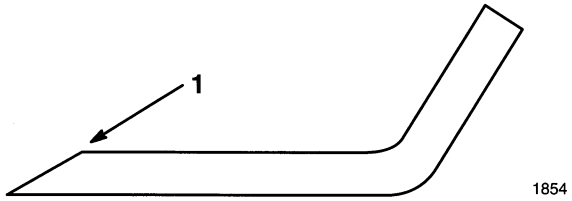

Figure 26

1. Sharpen at original angle

2. Check the balance of the blade by putting it on a blade balancer (Fig. 27). If the blade stays in a horizontal position, the blade is balanced and can be used. If the blade is not balanced, file some metal off the back side of the blade. Repeat this procedure until the blade is balanced.

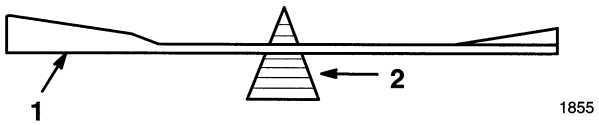

Figure 27

1. Blade
2. Balancer

Installing the Blade(s)

1. Install the blade, belleville washer, and the blade bolt (Fig. 28).

   IMPORTANT: The curved part of the blade must be pointing toward the inside of the mower to assure proper cutting.

2. Tighten the blade nut to 40-60 ft–lb (54-81 Nm).

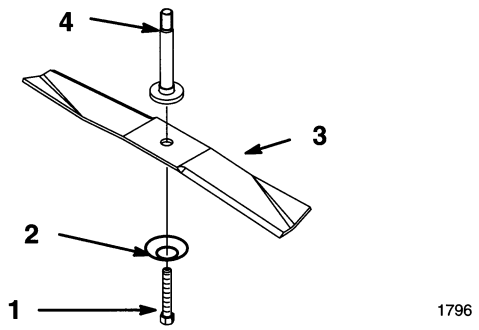

Figure 28

1. Nut
2. Belleville washer
3. Blade
4. Spindle

Blade Drive Belt

Removing the Blade Drive Belt

1. Remove the mower; refer to Removing the Mower, page 10.
2. Remove the pulley cover mounting screws and pulley covers from blade pulleys (Fig. 29).
3. Loosen idler pulley mounting bolts to move belt guides (Fig. 29).
4. Remove the belt from the pulleys (Fig. 29).

Installing the Blade Drive Belt

1. Install the new belt around the blade pulleys and the idler pulleys.
2. Adjust belt guide on idler pulley as shown and tighten mounting bolt (Fig. 29).
3. Install the left and right pulley covers with the mounting screws (Fig. 29).
4. Install the mower; refer to Installing the Mower, page 5.

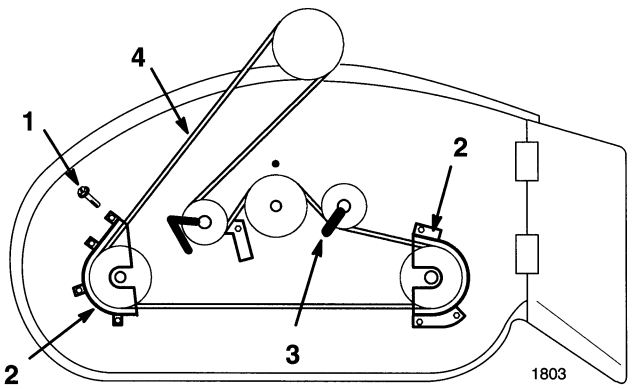

Figure 29

Top View

1. Pulley cover screw
2. Pulley cover
3. Belt Guides
4. Mower belt

Storage

1. Clean dirt and chaff from the top of the mower.
2. Scrape heavy buildup of grass and dirt from the underside of the mower. Then wash the mower with a garden hose.
3. Check the condition of the blade(s); refer to Cutting Blade, page 17.
4. Check the condition of the blade drive belt.
5. Check and tighten all bolts, nuts, and screws. Repair or replace any part that is damaged or defective.
6. Paint all scratched or bare metal surfaces. Paint is available from you Authorized Service Dealer.
7. Store the machine in a clean, dry garage or storage area. Cover the machine to protect it and keep it clean.

Troubleshooting

PROBLEM	POSSIBLE CAUSES	CORRECTIVE ACTION
Abnormal vibration.	1. Cutting blade(s) is bent or unbalanced.	1. Install new cutting blade(s).
	2. Blade mounting bolt is loose.	2. Tighten blade mounting bolt.
	3. Engine mounting bolts are loose.	3. Tighten engine mounting bolts.
	4. Loose engine pulley, idler pulley, or blade pulley.	4. Tighten the appropriate pulley.
	5. Engine pulley is damaged.	5. Contact Authorized Service Dealer.
Blade(s) does not rotate.	1. Blade drive belt is worn, loose or broken.	1. Install new blade drive belt.
	2. Blade drive belt is off pulley.	2. Install blade drive belt and check idler pulley and belt guides for correct position.
Uneven cutting height.	1. Gage wheels improperly adjusted.	1. Adjust gage wheels.
	2. Tractor tire pressure is incorrect.	2. Set tractor tire pressure.
	3. Mower is not level.	3. Level mower from side-to-side and front-to-rear.
	4. Underside of mower is dirty.	4. Clean the underside of the mower.


TORO®