Form No. 3396-375 Rev B

TORO®

Count on it.

Operator's Manual

Trench Filler

Compact Utility Loader

Model No. 22472—Serial No. 315000001 and Up

Register at www.Toro.com.
Original Instructions (EN)

CE

3396-375 B

This product complies with all relevant European directives. For details, please see the Declaration of Incorporation (DOI) at the back of this publication.

⚠ WARNING

CALIFORNIA
Proposition 65 Warning

This product contains a chemical or chemicals known to the State of California to cause cancer, birth defects, or reproductive harm.

Introduction

The trench filler is an attachment designed for use on Toro compact utility loaders to fill trenches dug by a trencher with loose soil left by the trenching process.

Read this information carefully to learn how to operate and maintain your product properly and to avoid injury and product damage. You are responsible for operating the product properly and safely.

You may contact Toro directly at www.Toro.com for product safety and operation training materials, accessory information, help finding a dealer, or to register your product.

Whenever you need service, genuine Toro parts, or additional information, contact an Authorized Service Dealer or Toro Customer Service and have the model and serial numbers of your product ready. Figure 1 identifies the location of the model and serial numbers on the product. Write the numbers in the space provided.

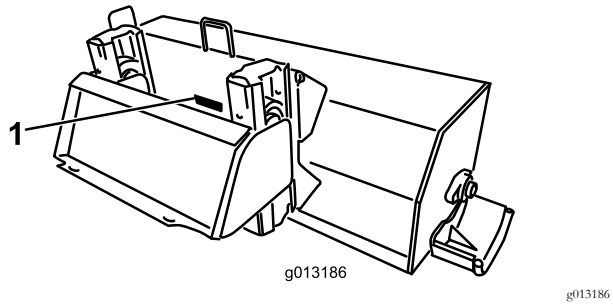

g013186

Figure 1

1. Model and serial number location

Model No. _____

Serial No. _____

This manual identifies potential hazards and has safety messages identified by the safety-alert symbol (Figure 2), which signals a hazard that may cause serious injury or death if you do not follow the recommended precautions.



g000502

Figure 2

1. Safety-alert symbol

This manual also uses 2 words to highlight information. **Important** calls attention to special mechanical information and **Note** emphasizes general information worthy of special attention.

Contents

Safety 3
General Trench Filler Safety 4
Toro Trench Filler Safety 4
Stability Ratings 5
Safety and Instructional Decals 5
Product Overview 6
Specifications 6
Attachments/Accessories 6
Operation 7
Filling a Trench 7
Transporting the Attachment on a Trailer 7
Operating Tips 7
Maintenance 8
Recommended Maintenance Schedule(s) 8
Greasing the Auger Bearing 8
Adjusting the Skids 8
Storage 9
Troubleshooting 10

© 2016—The Toro® Company
8111 Lyndale Avenue South
Bloomington, MN 55420

Contact us at www.Toro.com.
Printed in the USA
All Rights Reserved

Safety

Improper use or maintenance by the operator or owner can result in injury. To reduce the potential for injury, comply with these safety instructions and those in the traction unit *Operator's Manual*. Always pay attention to the safety-alert symbol, which means *Caution*, *Warning*, or *Danger*—personal safety instruction. Failure to comply with the instruction may result in personal injury or death.

⚠ DANGER

There may be buried power, gas, and/or telephone lines in the work area. Shock or explosion may occur if you dig into them

Have the property or work area marked for buried lines and do not dig in marked areas. Contact your local marking service or utility company to have the property marked (for example, in the United States, call 811 for the nationwide marking service).

⚠ WARNING

When the trench filler is in operation, the rollers in the float guide move and can injure hands and feet.

- **Stay in the operator's position behind the control panel while operating the trench filler.**
- **Keep face, hands, feet, and any other part of your body or clothing away from moving parts.**

⚠ WARNING

When the trench filler is in operation, the auger can be rotating and which may result in the amputation or severe injury of hands and feet.

- **Before adjusting, cleaning, repairing, and inspecting the trench filler, move the auxiliary-hydraulics lever to the OFF position, turn the key in the ignition switch to the OFF position, remove the key, and wait for all moving parts to stop.**
- **Stay behind the handles while operating the trench filler.**
- **Keep all body parts and clothing away from moving or rotating parts.**

⚠ WARNING

When the engine is off, attachments in the raised position can gradually lower. Someone nearby may be pinned or injured by the attachment as it lowers.

Always lower the attachment lift each time you shut off the traction unit.

⚠ WARNING

If you do not fully seat the attachment-locking pins in the attachment-mount plate holes, the attachment could fall off of the traction unit severely injuring the operator or bystanders.

- **Ensure that you fully seat the attachment-locking pins through the holes in the attachment-mount plate before lifting the attachment.**
- **Ensure that the attachment-mount plate is free of any dirt or debris that may hinder the connection of the traction unit to the attachment.**
- **Refer to your traction unit *Operator's Manual* for detailed information on safely connecting an attachment to your traction unit.**

⚠ CAUTION

Hydraulic fluid escaping under pressure can penetrate skin and cause injury.

- **Make sure that all hydraulic fluid hoses and lines are in good condition and all hydraulic connections and fittings are tight before applying pressure to the hydraulic system.**
- **Keep your body and hands away from pinhole leaks or nozzles that eject high pressure hydraulic fluid.**
- **Use cardboard or paper to find hydraulic leaks.**
- **Safely relieve all pressure in the hydraulic system before performing any work on the hydraulic system.**
- **Get immediate medical help if fluid is injected into skin.**

⚠ CAUTION

Hydraulic couplers, hydraulic lines/valves, and hydraulic fluid may be hot and can burn you if you touch them.

- **Wear gloves when operating the hydraulic couplers.**
- **Allow the traction unit to cool before touching hydraulic components.**
- **Do not touch hydraulic fluid spills.**

General Trench Filler Safety

The following instructions have been adapted from the ANSI/OPEI and ISO standards.

Preparation

- Never attempt to make any adjustments while the engine is running, except when specifically recommended by Toro.
- The operation of any powered machine can result in foreign objects being thrown into the eyes. Always wear safety glasses or eye shields during operation or while performing an adjustment or repair.
- Wear appropriate clothing including substantial footwear, safety glasses or eye shields, long pants, and hearing protection.

Operation

- Do not put hands or feet near or under rotating parts.
- Exercise extreme caution when operating on or crossing gravel drives, walks, or roads. Stay alert for hidden hazards or traffic. Do not carry passengers.
- After striking a foreign object, turn the key in the ignition switch to the OFF position, cycle the auxiliary-hydraulics lever, disconnect the hydraulic lines, thoroughly inspect the trench filler for any damage, and repair the damage before restarting and operating the trench filler.
- If the unit should start to vibrate abnormally, turn the key in the ignition switch to the OFF position and check immediately for the cause. Vibration is generally a warning of trouble.
- Stop the engine whenever you leave the operating position, before unclogging the auger/impeller housing or discharge chute, and when making any repairs, adjustments, or inspections.
- When cleaning, repairing, or inspecting, turn the key in the ignition switch to the OFF position, make certain the auger/impeller and all moving parts have stopped, cycle the auxiliary-hydraulics lever, and disconnect the hydraulic lines.
- Keep children and pets away.
- Do not overload the machine capacity by attempting to backfill too fast.
- Look behind and use care when backing up with the machine.
- Never operate the machine at high transport speeds on slippery surfaces.
- Keep bystanders away from the front of the unit.
- Disengage power to the auger/impeller when the trench filler is transported or not in use.
- Never operate the trench filler without good visibility or light.
- Lightning can cause severe injury or death. If lightning is seen or thunder is heard in the area, do not operate the machine; seek shelter.

Maintenance and Storage

- Check fasteners at frequent intervals for proper tightness to be sure the equipment is in safe working condition.
- Always refer to the *Operator's Manual* for important details if the trench filler is to be stored for an extended period.
- Maintain or replace safety and instruction labels, as necessary.

Toro Trench Filler Safety

The following list contains safety information specific to Toro products or other safety information that is not included in the ANSI or ISO standards.

- The rotating auger/impeller or rotor blades can cut off or injure fingers or hands. Stay in the operator's position and away from the discharge opening while operating the trench filler. Keep your face hands, feet, and any other part of your body or clothing away from concealed, moving, or rotating parts.
- Before adjusting, cleaning, repairing, and inspecting the trench filler, and before unclogging the discharge chute, turn the key in the ignition switch to the OFF position, remove the key, and wait for all moving parts to stop. Also, cycle the auxiliary-hydraulics lever and disconnect the hydraulic lines.
- Before leaving the operator's position, turn the key in the ignition switch to the OFF position, remove the key, and wait for all moving parts to stop.
- Always wear substantial footwear.
- If a shield, safety device, or decal is damaged, illegible, or lost, repair or replace it before beginning operation. Also, tighten any loose fasteners.
- Perform only those maintenance instructions described in this manual. Before performing any maintenance, service, or adjustment, turn the key in the ignition switch to the OFF position, remove the key, cycle the auxiliary-hydraulics lever, and disconnect the hydraulic lines. If major repairs are ever needed, contact your Authorized Toro Service Dealer.
- To ensure optimum performance and continued safety certification of the machine, use only genuine Toro

replacement parts and accessories. Replacement parts and accessories made by other manufacturers could be dangerous, and such use could void the product warranty.

- Always transport the trench filler in a lowered position.

Stability Ratings

To determine the degree of slope you can traverse with the attachment installed on a traction unit, find the stability rating for the hill position you want to travel in the appropriate table below, then find the degree of slope for the same rating and hill position in the Stability Data section of the traction unit *Operator's Manual*.

⚠ WARNING

Exceeding the maximum recommended slope can cause the traction unit to tip, crushing you or bystanders.

Do not drive the traction unit on a slope steeper than the maximum recommended slope, as determined in the following tables and the traction unit *Operator's Manual*.

Orientation	Stability Rating
Front Uphill 	**C**
Rear Uphill 	**C**
Side Uphill 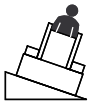	**B**

Safety and Instructional Decals

Safety decals and instructions are easily visible to the operator and are located near any area of potential danger. Replace any decal that is damaged or lost.

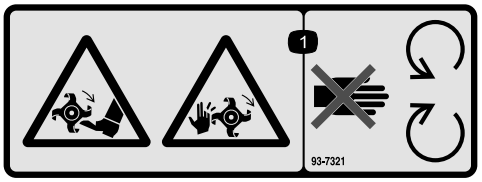

decal93-7321

93–7321

1. Cutting/dismemberment hazard of hands and feet, rotating knives—stay away from moving parts.

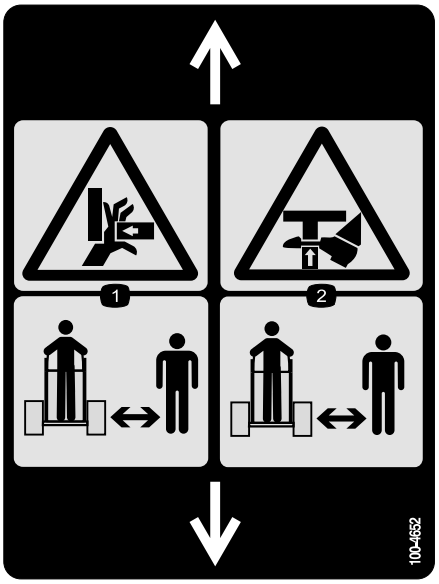

decal100-4652

100–4652

1. Crushing hazard of hand—keep bystanders a safe distance from the machine.
2. Crushing hazard of foot—keep bystanders a safe distance from the machine.

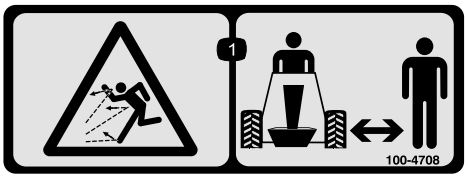

decal100-4708

100–4708

1. Thrown object hazard—keep bystanders a safe distance from the traction unit.

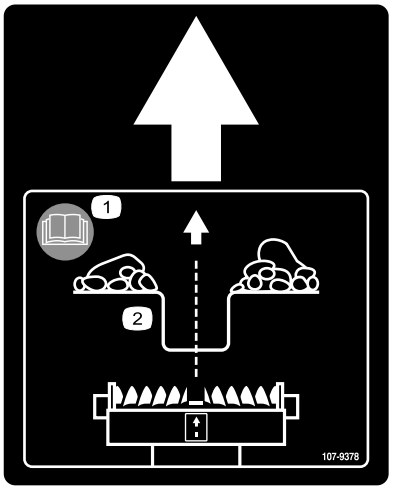

decal107-9378

107–9378

1. For more information read the *Operator's Manual*.
2. Keep the center arrow on the trench filler attachment decal centered over the trench when operating.

Product Overview

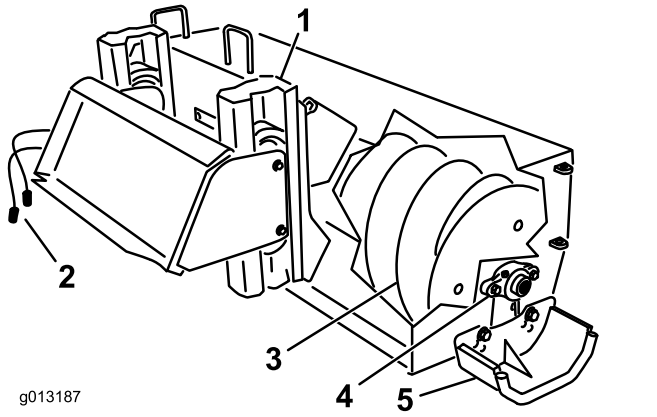

g013187

Figure 3

1. Float guide
2. Hydraulic lines
3. Auger
4. Bearing
5. Skid (2)

Specifications

Note: Specifications and design are subject to change without notice.

Width	157 cm (62 inches)
Working width	122 cm (48 inches)
Length	79 cm (31 inches)
Height	56 cm (22 inches)
Weight	186 kg (410 lb)

Attachments/Accessories

A selection of Toro approved attachments and accessories is available for use with the machine to enhance and expand its capabilities. Contact your Authorized Service Dealer or Distributor or go to www.Toro.com for a list of all approved attachments and accessories.

Operation

Refer to your traction unit *Operator's Manual* for more information on installing and removing attachments on your traction unit.

Important: Always use the traction unit to lift and move the attachment.

Filling a Trench

1. Put the key into the ignition switch and turn the key to the ON position.
2. Pull the auxiliary-hydraulics lever to the reference bar to engage the trench filler.
3. Slowly lower the trench filler to the ground so that the auger is just above the ground.
4. For best results, start with the float rollers centered in the float guide.
5. Slowly move the traction unit forward to fill the trench.

   Note: When you move too fast, the trench filler stalls. If it stalls, raise it slightly, slowly drive rearward, then resume moving forward.
6. When finished, stop the trench filler by releasing the auxiliary-hydraulics lever.

Transporting the Attachment on a Trailer

1. Place the attachment on a trailer or truck capable of carrying it.
2. Securely tie the attachment to the trailer or truck using tie straps appropriate for the weight of the attachment and for highway use.

Operating Tips

- Clean the area of trash, branches, and rocks before trench filling to prevent equipment damage.
- For best trench filling, center the unit over the trench (Figure 4).

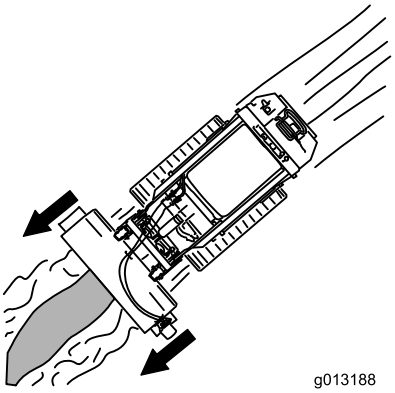

g013188

Figure 4

- Always begin trench filling with the slowest ground speed possible. Increase the speed if conditions permit.
- Always use full throttle (maximum engine speed) when trench filling.
- Never transport the trench filler with the loader arms raised.
- When trench filling, the auger should just clear the original ground surface to obtain maximum soil deposit into the trench.
- Periodically check to ensure that the rollers on the trench filler float are operating properly.
- When finished, compact the material over the trench to prepare it for grading.

Maintenance

Recommended Maintenance Schedule(s)

Maintenance Service Interval	Maintenance Procedure
Before each use or daily	• Check the bolts and nuts securing the auger.
Every 200 hours	• Grease the auger bearing.
Yearly or before storage	• Adjust the skids. • Paint chipped surfaces.

⚠ CAUTION

If you leave the key in the traction unit ignition switch, someone could accidently start the engine and seriously injure you or other bystanders.

Remove the key from the ignition switch before you do any maintenance.

Greasing the Auger Bearing

Service Interval: Every 200 hours

Grease the fitting immediately after every washing.

Grease Type: General-purpose grease

1. Turn the key in the ignition switch to the OFF position and remove the key.
2. Clean the grease fitting with a rag (Figure 5).

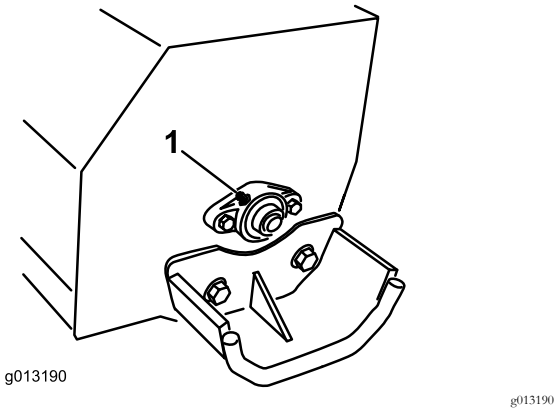

Figure 5

1. Grease fitting

3. Connect a grease gun to the fitting.
4. Pump grease into the fitting until grease begins to ooze out of the auger bearing.
5. Wipe up any excess grease.

Adjusting the Skids

Service Interval: Yearly or before storage

The distance between the auger blade and the ground is controlled by skids on each side of the housing. Adjust the height so that the auger flighting does not catch on uneven surfaces.

1. Lower the attachment until it is just above the ground and turn the key in the ignition switch to the OFF position.
2. Remove the bolts that secure the skids to the housing (Figure 6).

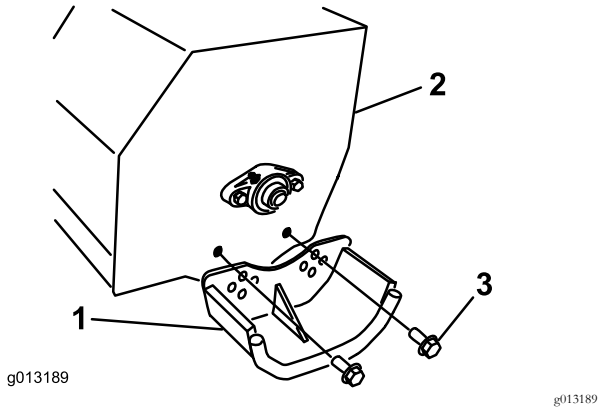

Figure 6

1. Skid
2. Housing
3. Bolts (install the bolt heads on the outside)

3. Position the skids equally on both sides and secure them with the bolts (Figure 6).

Storage

1. Before long term storage, wash the attachment with mild detergent and water to remove dirt and grime.
2. Grease the auger bearings.
3. Check and tighten all bolts, nuts, and screws. Repair or replace any damaged or worn parts.
4. Ensure that all hydraulic couplers are connected together to prevent contamination of the hydraulic system.
5. Paint all scratched or bare metal surfaces. Paint is available from your Authorized Service Dealer.
6. Store the attachment in a clean, dry garage or storage area. Cover it to protect it and keep it clean.

Troubleshooting

Problem	Possible Cause	Corrective Action
The attachment does not operate.	1. A hydraulic coupler is not completely connected.	1. Check and tighten all couplers.
	2. A hydraulic coupler is damaged.	2. Check the couplers and replace any that are damaged.
	3. There is an obstruction in a hydraulic hose.	3. Find and remove the obstruction.
	4. A hydraulic hose is kinked.	4. Replace the kinked hose.
	5. The auxiliary valve on the traction unit is not opening.	5. Repair the valve.

Notes:

Notes:

Notes:

Declaration of Incorporation

Model No.	Serial No.	Product Description	Invoice Description	General Description	Directive
22472	315000001 and Up	Trench Filler, Compact Utility Loader	TRENCH FILLER ATTACHMENT CE	Compact Utility Loader	2006/42/EC

Relevant technical documentation has been compiled as required per Part B of Annex VII of 2006/42/EC.

We will undertake to transmit, in response to requests by national authorities, relevant information on this partly completed machinery. The method of transmission shall be electronic transmittal.

This machinery shall not be put into service until incorporated into approved Toro models as indicated on the associated Declaration of Conformity and in accordance with all instructions, whereby it can be declared in conformity with all relevant Directives.

Certified:



Joe Hager
Sr. Engineering Manager
8111 Lyndale Ave. South
Bloomington, MN 55420, USA
June 23, 2015

EU Technical Contact:

Marcel Dutrieux
Manager European Product Integrity
Toro Europe NV
Nijverheidsstraat 5

2260 Oevel
Belgium

Tel. +32 16 386 659

International Distributor List

Distributor:	Country:	Phone Number:	Distributor:	Country:	Phone Number:
Agrolanc Kft	Hungary	36 27 539 640	Maquiver S.A.	Colombia	57 1 236 4079
Asian American Industrial (AAI)	Hong Kong	852 2497 7804	Maruyama Mfg. Co. Inc.	Japan	81 3 3252 2285
B-Ray Corporation	Korea	82 32 551 2076	Mountfield a.s.	Czech Republic	420 255 704 220
Brisa Goods LLC	Mexico	1 210 495 2417	Mountfield a.s.	Slovakia	420 255 704 220
Casco Sales Company	Puerto Rico	787 788 8383	Munditol S.A.	Argentina	54 11 4 821 9999
Ceres S.A.	Costa Rica	506 239 1138	Norma Garden	Russia	7 495 411 61 20
CSSC Turf Equipment (pvt) Ltd.	Sri Lanka	94 11 2746100	Oslinger Turf Equipment SA	Ecuador	593 4 239 6970
Cyril Johnston & Co.	Northern Ireland	44 2890 813 121	Oy Hako Ground and Garden Ab	Finland	358 987 00733
Cyril Johnston & Co.	Republic of Ireland	44 2890 813 121	Parkland Products Ltd.	New Zealand	64 3 34 93760
Fat Dragon	China	886 10 80841322	Perfetto	Poland	48 61 8 208 416
Femco S.A.	Guatemala	502 442 3277	Pratoverde SRL.	Italy	39 049 9128 128
FIVEMANS New-Tech Co., Ltd	China	86-10-6381 6136	Prochaska & Cie	Austria	43 1 278 5100
ForGarder OU	Estonia	372 384 6060	RT Cohen 2004 Ltd.	Israel	972 986 17979
G.Y.K. Company Ltd.	Japan	81 726 325 861	Riversa	Spain	34 9 52 83 7500
Geomechaniki of Athens	Greece	30 10 935 0054	Lely Turfcare	Denmark	45 66 109 200
Golf international Turizm	Turkey	90 216 336 5993	Lely (U.K.) Limited	United Kingdom	44 1480 226 800
Hako Ground and Garden	Sweden	46 35 10 0000	Solvert S.A.S.	France	33 1 30 81 77 00
Hako Ground and Garden	Norway	47 22 90 7760	Spypros Stavrinides Limited	Cyprus	357 22 434131
Hayter Limited (U.K.)	United Kingdom	44 1279 723 444	Surge Systems India Limited	India	91 1 292299901
Hydroturf Int. Co Dubai	United Arab Emirates	97 14 347 9479	T-Markt Logistics Ltd.	Hungary	36 26 525 500
Hydroturf Egypt LLC	Egypt	202 519 4308	Toro Australia	Australia	61 3 9580 7355
Irrimac	Portugal	351 21 238 8260	Toro Europe NV	Belgium	32 14 562 960
Irrigation Products Int'l Pvt Ltd.	India	0091 44 2449 4387	Valtech	Morocco	212 5 3766 3636
Jean Heybroek b.v.	Netherlands	31 30 639 4611	Victus Emak	Poland	48 61 823 8369

European Privacy Notice

The Information Toro Collects
Toro Warranty Company (Toro) respects your privacy. In order to process your warranty claim and contact you in the event of a product recall, we ask you to share certain personal information with us, either directly or through your local Toro company or dealer.

The Toro warranty system is hosted on servers located within the United States where privacy law may not provide the same protection as applies in your country.

BY SHARING YOUR PERSONAL INFORMATION WITH US, YOU ARE CONSENTING TO THE PROCESSING OF YOUR PERSONAL INFORMATION AS DESCRIBED IN THIS PRIVACY NOTICE.

The Way Toro Uses Information
Toro may use your personal information to process warranty claims, to contact you in the event of a product recall and for any other purpose which we tell you about. Toro may share your information with Toro's affiliates, dealers or other business partners in connection with any of these activities. We will not sell your personal information to any other company. We reserve the right to disclose personal information in order to comply with applicable laws and with requests by the appropriate authorities, to operate our systems properly or for our own protection or that of other users.

Retention of your Personal Information
We will keep your personal information as long as we need it for the purposes for which it was originally collected or for other legitimate purposes (such as regulatory compliance), or as required by applicable law.

Toro's Commitment to Security of Your Personal Information
We take reasonable precautions in order to protect the security of your personal information. We also take steps to maintain the accuracy and current status of personal information.

Access and Correction of your Personal Information
If you would like to review or correct your personal information, please contact us by email at legal@toro.com.

Australian Consumer Law

Australian customers will find details relating to the Australian Consumer Law either inside the box or at your local Toro Dealer.

Toro Compact Utility Equipment Warranty

A One-Year Limited Warranty

Conditions and Products Covered

The Toro Company and its affiliate, Toro Warranty Company, pursuant to an agreement between them, jointly warrant your Toro Compact Utility Equipment ("Product") to be free from defects in materials or workmanship. The following time periods apply from the date of purchase:

Products	Warranty Period
Pro Sneak Compact Utility Loaders, Trenchers, Stump Grinders, and Attachments	1 year or 1000 operating hours, whichever occurs first
Kohler Engines	3 years*
All other Engines	2 years*

Where a warrantable condition exists, we will repair the Product at no cost to you including diagnosis, labor, and parts.

*Some engines used on Toro Products are warranted by the engine manufacturer.

Instructions for Obtaining Warranty Service

If you think that your Toro Product contains a defect in materials or workmanship, follow this procedure:

1. Contact any Authorized Toro Compact Utility Equipment (CUE) Service Dealer to arrange service at their dealership. To locate a dealer convenient to you, access our website at www.Toro.com. You may also call our Toro Customer Care Department toll free at the number below.
2. Bring the product and your proof of purchase (sales receipt) to the Service Dealer.
3. If for any reason you are dissatisfied with the Service Dealer's analysis or with the assistance provided, contact us at:

   SWS Customer Care Department
   Toro Warranty Company
   8111 Lyndale Avenue South
   Bloomington, MN 55420-1196
   Toll Free: 888-384-9940

Owner Responsibilities

You must maintain your Toro Product by following the maintenance procedures described in the *Operator's Manual*. Such routine maintenance, whether performed by a dealer or by you, is at your expense. Parts scheduled for replacement as required maintenance ("Maintenance Parts"), are warranted for the period of time up to the scheduled replacement time for that part. Failure to perform required maintenance and adjustments can be grounds for disallowing a warranty claim.

Items and Conditions Not Covered

Not all product failures or malfunctions that occur during the warranty period are defects in materials or workmanship. This express warranty does not cover the following:

- Product failures which result from the use of non-Toro replacement parts, or from installation and use of add-on, modified, or unapproved accessories
- Product failures which result from failure to perform required maintenance and/or adjustments
- Product failures which result from operating the Product in an abusive, negligent or reckless manner
- Parts subject to consumption through use unless found to be defective. Examples of parts which are consumed, or used up, during normal product operation include, but are not limited to, belts, wipers, spark plugs, tires, filters, gaskets, wear plates, seals, O-rings, drive chains, clutches.
- Failures caused by outside influence. Items considered to be outside influence include, but are not limited to, weather, storage practices, contamination, use of unapproved coolants, lubricants, additives, or chemicals, etc.
- Normal "wear and tear" items. Normal "wear and tear" includes, but is not limited to, worn painted surfaces, scratched decals, etc.
- Repairs necessary due to failure to follow recommended fuel procedure (consult *Operator's Manual* for more details)
  - Removing contaminants from the fuel system is not covered
  - Use of old fuel (more than one month old) or fuel which contains more than 10% ethanol or more that 15% MTBE
  - Failure to drain the fuel system prior to any period of non-use over one month
- Any component covered by a separate manufacturer's warranty
- Pickup and delivery charges

General Conditions

Repair by an Authorized Toro Compact Utility Equipment (CUE) Service Dealer is your sole remedy under this warranty.

Neither The Toro Company nor Toro Warranty Company is liable for indirect, incidental or consequential damages in connection with the use of the Toro Products covered by this warranty, including any cost or expense of providing substitute equipment or service during reasonable periods of malfunction or non-use pending completion of repairs under this warranty. All implied warranties of merchantability and fitness for use are limited to the duration of this express warranty. Some states do not allow exclusions of incidental or consequential damages, or limitations on how long an implied warranty lasts, so the above exclusions and limitations may not apply to you.

This warranty gives you specific legal rights, and you may also have other rights which vary from state to state.

Except for the engine warranty coverage and the Emissions warranty referenced below, if applicable, there is no other express warranty. The Emissions Control System on your Product may be covered by a separate warranty meeting requirements established by the U.S. Environmental Protection Agency (EPA) or the California Air Resources Board (CARB). The hour limitations set forth above do not apply to the Emissions Control System Warranty. Refer to the California Emission Control Warranty Statement supplied with your Product or contained in the engine manufacturer's documentation for details.

Countries Other than the United States or Canada

Customers who have purchased Toro products outside the United States or Canada should contact their Toro Distributor (Dealer) to obtain guarantee policies for your country, province, or state. If for any reason you are dissatisfied with your Distributor's service or have difficulty obtaining guarantee information, contact the Toro importer. If all other remedies fail, you may contact us at Toro Warranty Company.

Australian Consumer Law: Australian customers will find details relating to the Australian Consumer Law either inside the box or at your local Toro Dealer.