Form No. 3412-299 Rev A

TORO®

Count on it.

Operator's Manual

Brush Cutter

Model No. 23522—Serial No. 400000000 and Up
Model No. 33522—Serial No. 400000000 and Up

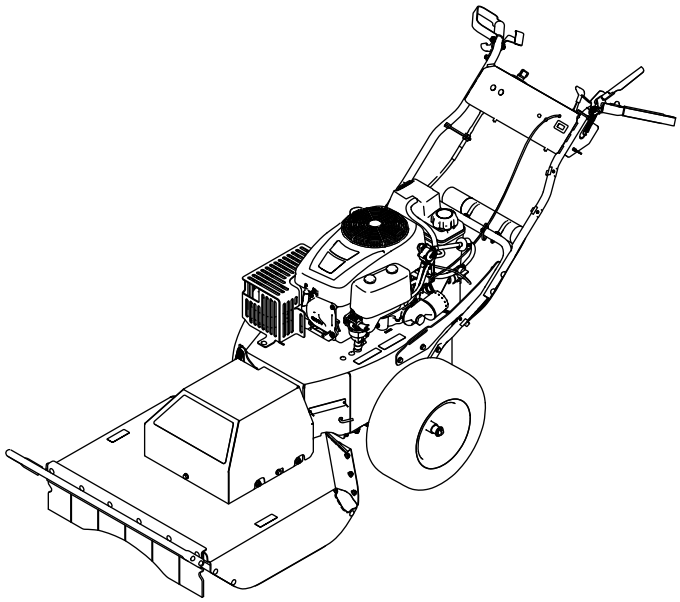

Register at www.Toro.com.
Original Instructions (EN)

CE

3412-299 A

This product complies with all relevant European directives; for details, please see the separate product specific Declaration of Conformity (DOC) sheet.

⚠ WARNING

CALIFORNIA
Proposition 65 Warning

This product contains a chemical or chemicals known to the State of California to cause cancer, birth defects, or reproductive harm.

This spark ignition system complies with Canadian ICES-002

Because in some areas there are local, state, or federal regulations requiring that a spark arrester be used on the engine of this machine, a spark arrester is available as an option. If you require a spark arrester, contact your Authorized Toro Service Dealer.

Genuine Toro spark arresters are approved by the USDA Forestry Service.

It is a violation of California Public Resource Code Section 4442 or 4443 to use or operate the engine on any forest-covered, brush-covered, or grass-covered land unless the engine is equipped with a spark arrester, as defined in Section 4442, maintained in effective working order or the engine is constructed, equipped, and maintained for the prevention of fire.

Introduction

This machine is designed to level brush, tall weeds, saplings, small trees and heavy vegetation up to 1.8 m (6 feet) tall and 5.1 cm (2 inches) in diameter.

Read this information carefully to learn how to operate and maintain your product properly and to avoid injury and product damage. You are responsible for operating the product properly and safely.

You may contact Toro directly at www.Toro.com for product and accessory information, help finding a dealer, or to register your product.

Whenever you need service, genuine Toro parts, or additional information, contact an Authorized Service Dealer or Toro Customer Service and have the model and serial numbers of your product ready. Figure 1 illustrates the location of the model and serial numbers on the product. Write the numbers in the space provided.

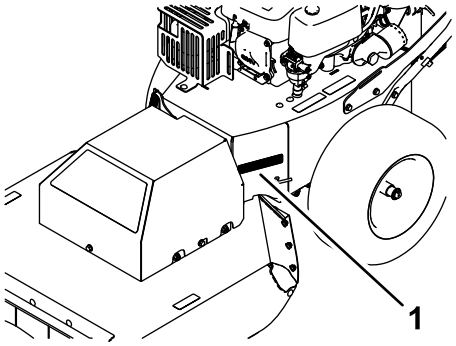

g186622

Figure 1

1. Model and serial number plate

Model No. _____

Serial No. _____

This manual identifies potential hazards and has safety messages identified by the safety-alert symbol (Figure 2), which signals a hazard that may cause serious injury or death if you do not follow the recommended precautions.



g000502

Figure 2

1. Safety-alert symbol

This manual uses 2 words to highlight information. **Important** calls attention to special mechanical information and **Note** emphasizes general information worthy of special attention.

© 2016—The Toro® Company
8111 Lyndale Avenue South
Bloomington, MN 55420

Contact us at www.Toro.com.
Printed in the USA
All Rights Reserved

Contents

Safety 4
General Safety 4
Slope Indicator 5
Safety and Instructional Decals 6
Setup 8
1 Installing the Handle 8
2 Connecting the Negative Battery Cable 8
Product Overview 10
Controls 10
Specifications 11
Before Operation 12
Before Operation Safety 12
Recommended Fuel 12
Using Stabilizer/Conditioner 12
Filling the Fuel Tank 13
Checking the Engine-Oil Level 13
Think Safety First 13
During Operation 13
During Operating Safety 13
Operating the Ignition Switch 14
Starting and Shutting Off the Engine 14
Operating the Traction Control 14
Operating the Blade-Control Clutch 15
After Operation 15
After Operation Safety 15
Moving a Nonfunctioning Machine 16
Transporting the Machine 16
Maintenance 17
Recommended Maintenance Schedule(s) 17
Maintenance Safety 17
Engine Maintenance 18
Engine Safety 18
Servicing the Air Cleaner 18
Servicing the Engine Oil 19
Servicing the Spark Plug 21
Fuel System Maintenance 22
Replacing the In-Line Fuel Filter 22
Electrical System Maintenance 23
Electrical System Safety 23
Removing the Battery 23
Charging the Battery 24
Installing the Battery 24
Servicing a Replacement Battery 24
Drive System Maintenance 25
Checking the Tire Pressure 25
Cooling System Maintenance 25
Cleaning the Engine Screen 25
Cleaning the Engine-Cooling Fins and Shrouds 25
Belt Maintenance 26
Inspecting the Belts 26
Replacing the Transmission Belt 26
Replacing the Mower Belt 26
Mower Maintenance 27
Blade Safety 27
Before Inspecting or Servicing the Blade 27
Inspecting the Blade 27
Checking for a Bent Blade 28
Removing the Blade 28
Sharpening the Blade 29
Installing the Blade 29
Cleaning 30
Removing Debris from the Machine 30
Storage 30
Storing the Machine 30
Troubleshooting 31

Safety

This machine has been designed in accordance with EN 12733.

General Safety

This product is capable of amputating hands and feet and of throwing objects. Always follow all safety instructions to avoid serious personal injury.

Using this product for purposes other than its intended use could prove dangerous to you and bystanders.

- Read and understand the contents of this *Operator's Manual* before starting the engine.
- Do not put your hands or feet near moving components of the machine.
- Do not operate the machine without all guards and other safety protective devices in place and working on the machine.
- Keep clear of any discharge opening. Keep bystanders a safe distance away from the machine.
- Keep children out of the operating area. Never allow children to operate the machine.
- Stop the machine and shut off the engine before servicing, fueling, or unclogging the machine.

Improperly using or maintaining this machine can result in injury. To reduce the potential for injury, comply with these safety instructions and always pay attention to the safety-alert symbol, which means Caution, Warning, or Danger—personal safety instruction. Failure to comply with these instructions may result in personal injury or death.

You can find additional items of safety information in their respective sections throughout this manual.

Slope Indicator

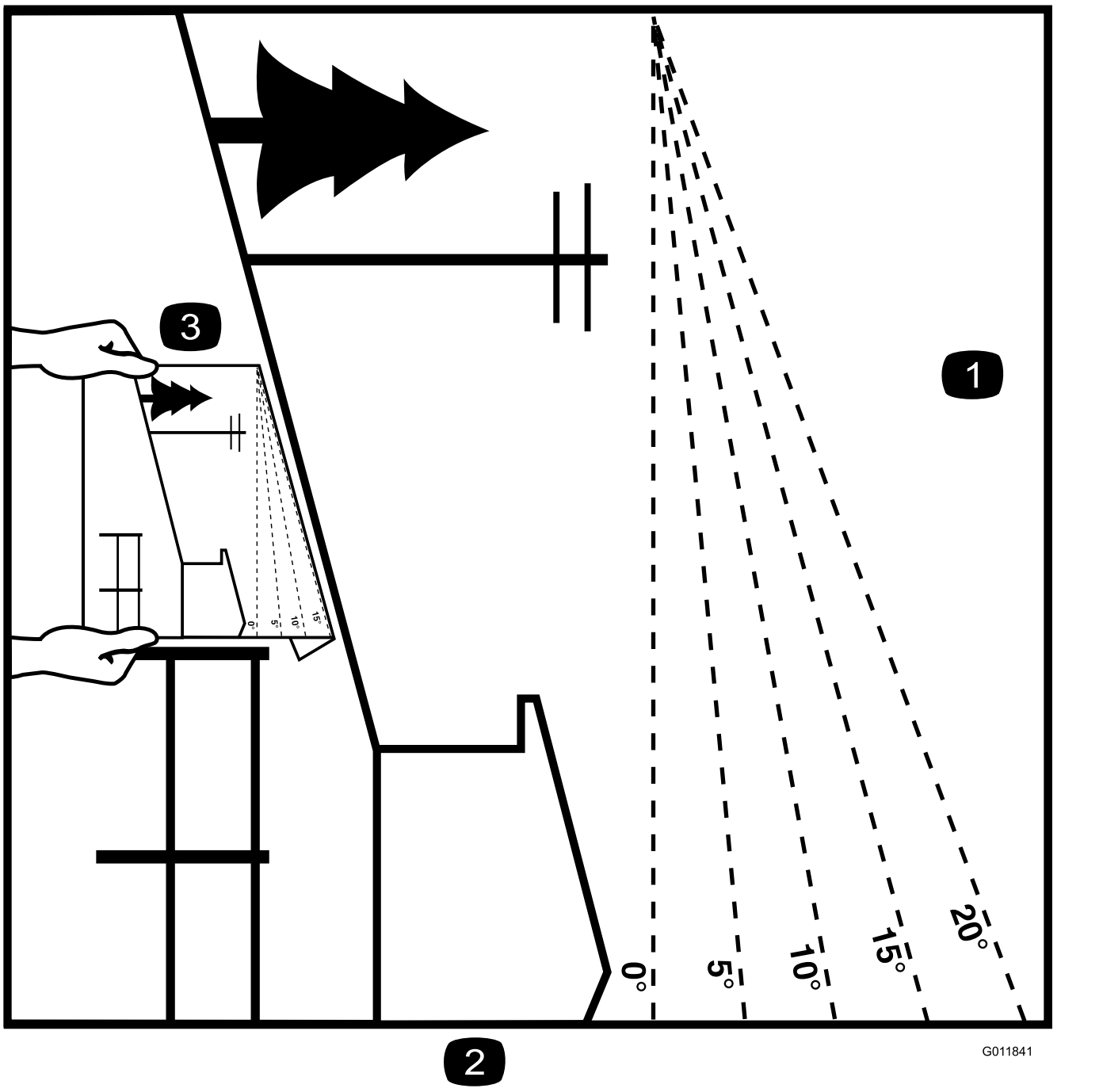

Figure 3

This page may be copied for personal use.

1. The maximum slope you can safely operate the machine on is **15 degrees**. Use the slope chart to determine the degree of slope of hills before operating. **Do not operate this machine on a slope greater than 15 degrees.** Fold along the appropriate line to match the recommended slope.
2. Align this edge with a vertical surface, a tree, building, fence pole, etc.
3. Example of how to compare slope with folded edge

Safety and Instructional Decals

Safety decals and instructions are easily visible to the operator and are located near any area of potential danger. Replace any decal that is damaged or missing.

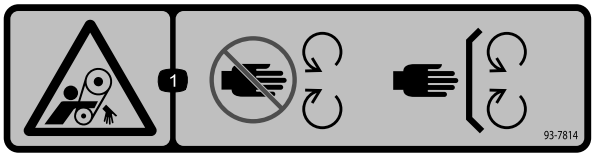

decal93-7814

93-7814

1. Entanglement hazard, belt—stay away from moving parts; keep all guards and shields in place.

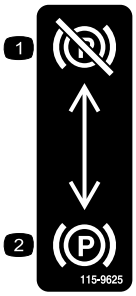

decal115-9625

115-9625

1. Parking brake—disengaged
2. Parking brake—engaged

CALIFORNIA SPARK ARRESTER WARNING

Operation of this equipment may create sparks that can start fires around dry vegetation. A spark arrester may be required. The operator should contact local fire agencies for laws or regulations relating to fire prevention requirements. 117-2718

decal117-2718

117-2718

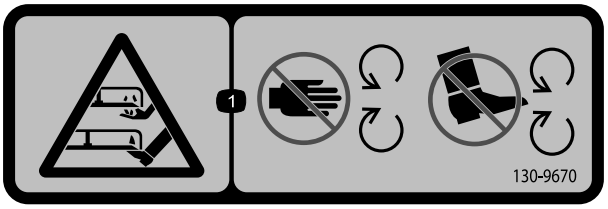

decal130-9670

130-9670

1. Severing hazard of hand or foot; mower blade—keep away from moving parts; keep all guards and shields in place.

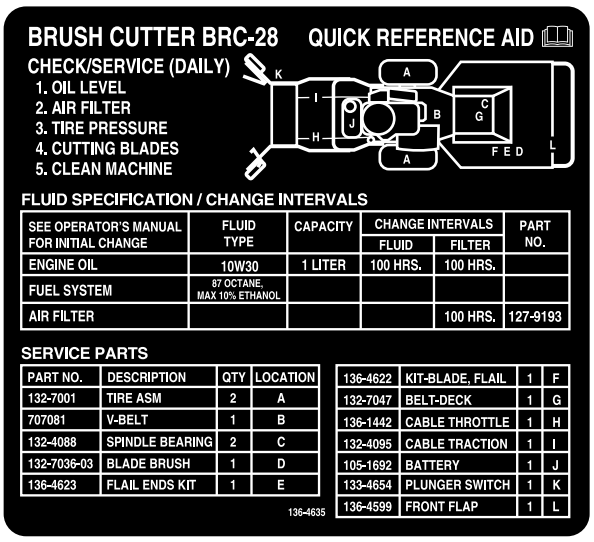

decal136-4635

136-4635

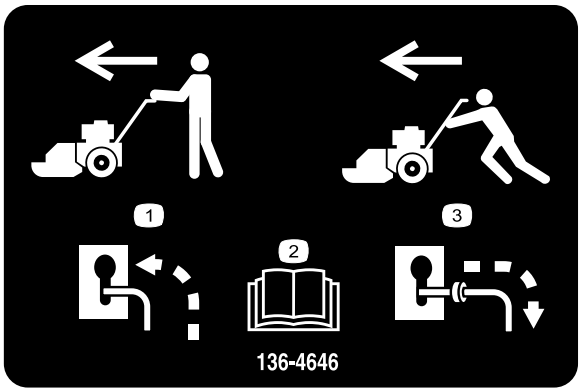

decal136-4646

136-4646

1. When the machine has power, disengage the bypass and transport the machine normally.
2. Read the *Operator's Manual*.
3. When the machine has no power, engage the bypass and push the machine to transport it.

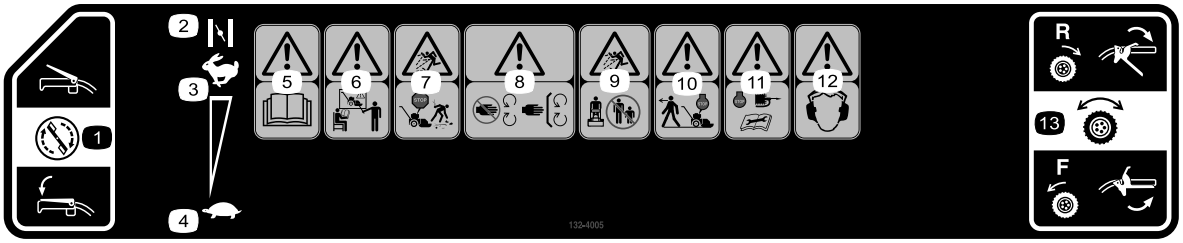

decal132-4005

132-4005

1. Cutting blade control
2. Choke
3. Fast engine speed
4. Slow engine speed
5. Warning—read the *Operator's Manual*.
6. Warning—all operator's should be trained before operating the machine.
7. Thrown object hazard—shut off the engine and pick up debris before operating.
8. Warning—keep away from moving parts; keep all guards and covers in place.
9. Thrown object hazard—keep bystanders a safe distance from the machine.
10. Warning—shut off the engine before leaving the operator position.
11. Warning—shut off the engine, disconnect the spark plug, and read the *Operator's Manual* before performing maintenance.
12. Warning—hearing protection must be worn.
13. Traction drive control

Setup

Loose Parts

Use the chart below to verify that all parts have been shipped.

Procedure	Description	Qty.	Use
1	Cable tie Handle bolt Nut (5/16 inch) Slotted-head bolt (#10) Locknut (#10)	1 4 4 2 2	Install the handle.
2	No parts required	–	Connect the negative battery cable.

1

Installing the Handle

Parts needed for this procedure:

1	Cable tie
4	Handle bolt
4	Nut (5/16 inch)
2	Slotted-head bolt (#10)
2	Locknut (#10)

Procedure

1. Install the upper handle tubes to the lower handle and braces using 2 handle bolts and 2 nuts (5/16 inch) on both sides of the machine (Figure 4).

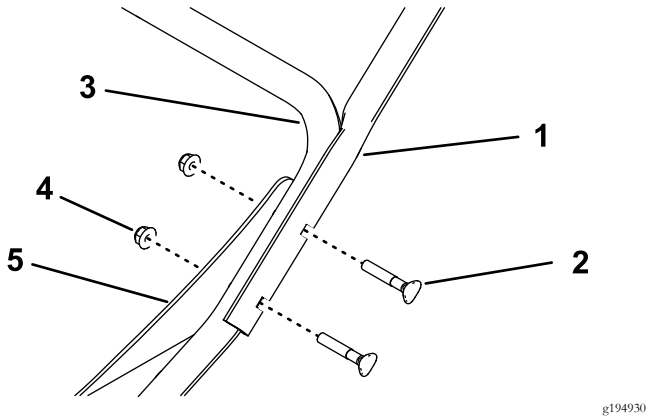

Figure 4
Left side shown

1. Upper handle tube
2. Handle bolt
3. Lower handle
4. Nut (5/16 inch)
5. Brace

2. Secure the throttle cable over the lower handle using a cable tie (Figure 5).

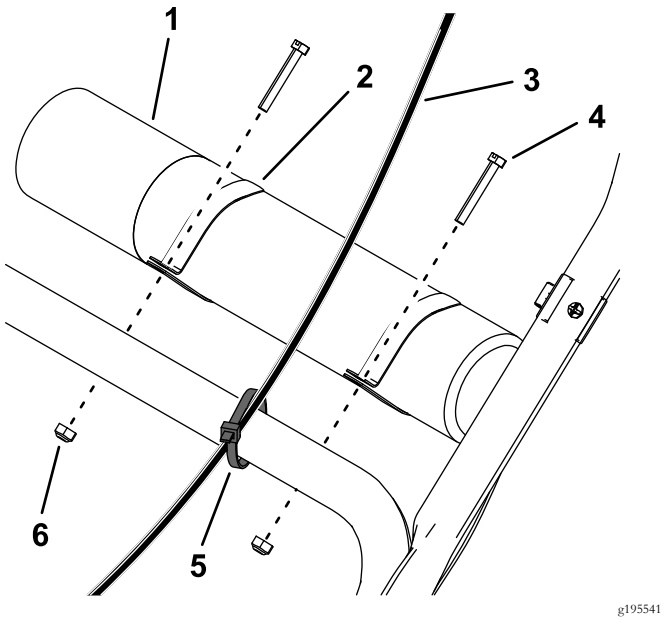

Figure 5

1. *Operator's Manual* tube
2. Clamp (2)
3. Throttle cable
4. Slotted-head bolt (2)
5. Cable tie
6. Locknut (2)

3. Slide the clamps onto the *Operator's Manual* tube and install it on top of the lower handle using 2 slotted-head bolts and 2 locknuts (Figure 5).

2

Connecting the Negative Battery Cable

No Parts Required

Procedure

⚠ WARNING

CALIFORNIA
Proposition 65 Warning

Battery posts, terminals, and related accessories contain lead and lead compounds, chemicals known to the State of California to cause cancer and reproductive harm. Wash hands after handling.

1. Remove the plastic cap from the negative battery terminal.
2. Connect the negative battery cable to the negative (-) battery post using the bolt and nut attached to the cable (Figure 6).

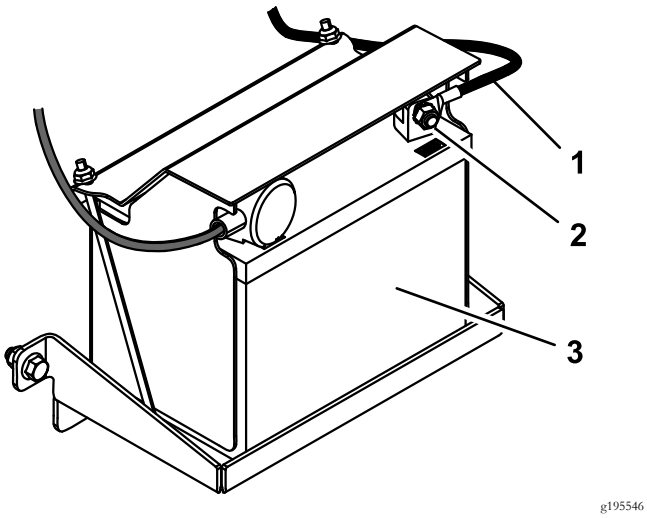

Figure 6

1. Negative battery cable
2. Bolt and nut
3. Battery

Product Overview

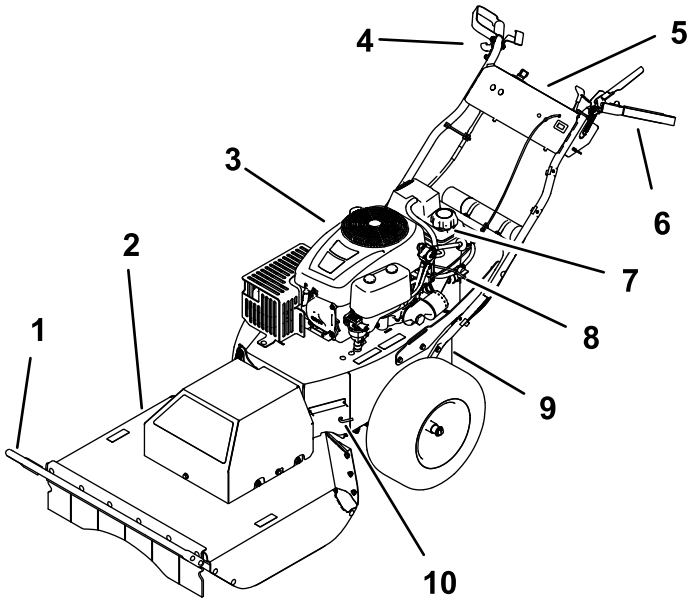

g186623

Figure 7

1. Brush bar
2. Cutter deck
3. Engine
4. Right hand grip and traction control
5. Control panel
6. Left hand grip and blade-control clutch
7. Fuel-tank cap
8. Fuel-shutoff valve
9. Parking brake
10. Bypass lever

Controls

Become familiar with all the controls (Figure 7 and Figure 8) before you start the engine and operate the machine.

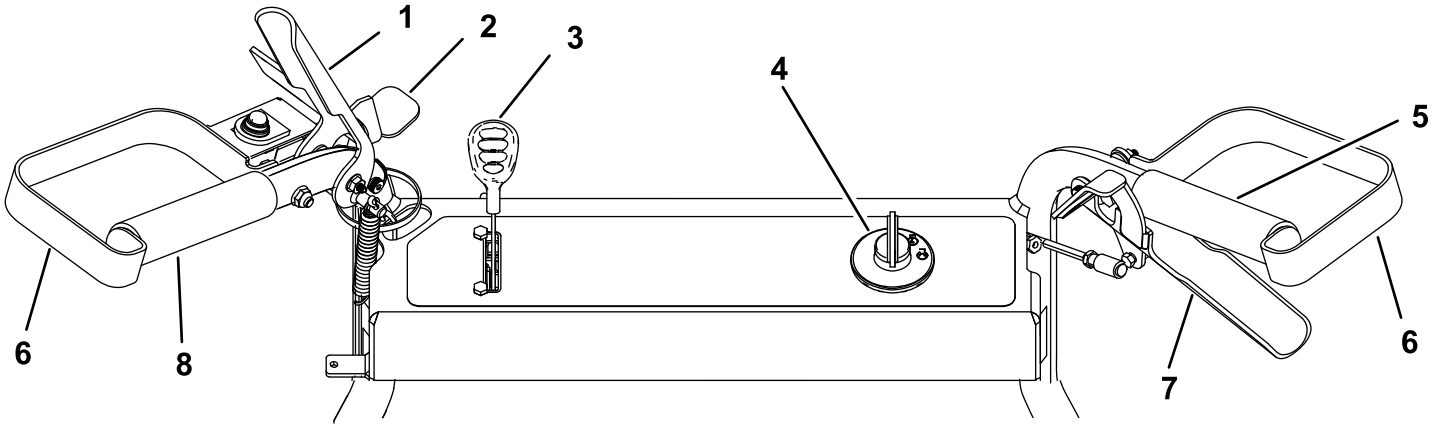

g186771

Figure 8

1. Blade-control clutch
2. Safety latch
3. Throttle/choke control
4. Ignition switch
5. Right hand grip
6. Hand guard
7. Traction control
8. Left hand grip

Blade-Control Clutch

Use the blade-control clutch to engage and disengage the mower blade.

Ignition Switch

The ignition switch has 3 positions: OFF, RUN, and START. The key turns to START and moves back to RUN upon release. Turning the key to the OFF ("STOP") position shuts off the engine; however, always remove the key from the ignition switch when leaving the machine to prevent someone from accidentally starting the engine and to prevent the battery from inadvertently draining (Figure 9).

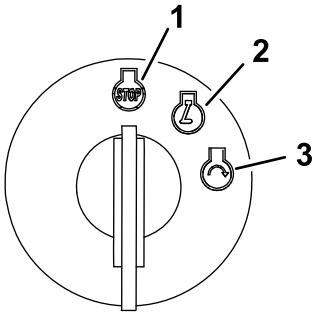

g192199

Figure 9

1. Off position
2. Run position
3. Start position

Throttle/Choke Lever

The throttle and choke controls are combined into 1 control lever. The throttle controls the engine speed and has a continuous-variable setting from SLOW to FAST. Engage the choke by moving the lever past the FAST setting until it stops

Traction Control

Use the traction control to move the machine forward and rearward with continuously variable speed.

Fuel-Shutoff Valve

Close the fuel-shutoff valve for transport, maintenance, and storage.

Ensure that the fuel-shutoff valve is open when starting the engine.

Parking Brake

The parking brake is located near the battery. To engage the parking brake, pull the lever outward through the keyhole and down to lock it in place (Figure 10). To disengage the parking brake, lift up the lever and push it inward through the keyhole.

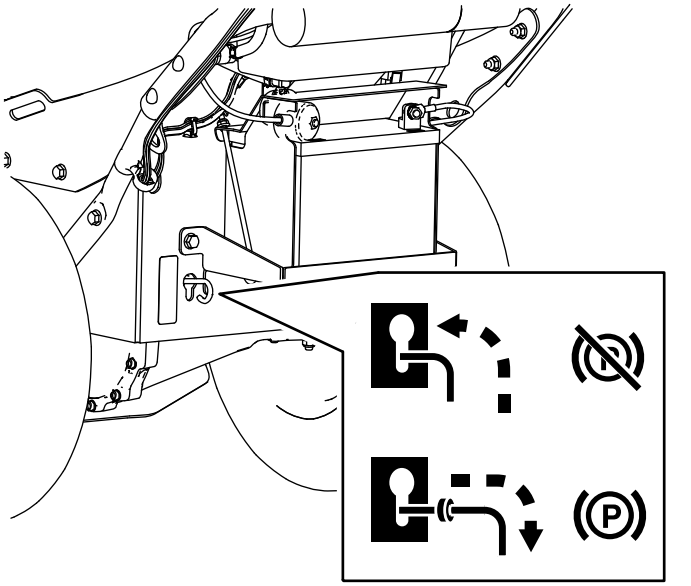

g195543

Figure 10

Hour Meter

The hour meter displays the number of hours of operation that have been logged on the machine (Figure 11).

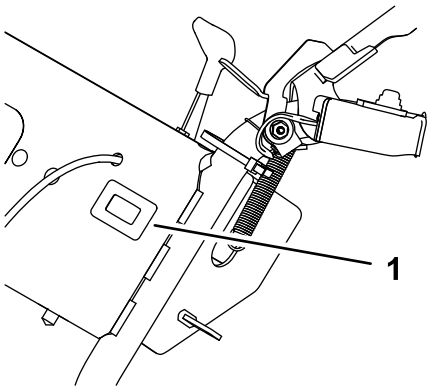

g186773

Figure 11

1. Hour meter

Specifications

Note: Specifications and design are subject to change without notice.

Length	227 cm (89 inches)
Width	88 cm (35 inches)
Height	101 cm (40 inches)
Weight	171 kg (376 lb)
Cutting width	71 cm (28 inches)

Operation

Before Operation

Note: Determine the left and right sides of the machine from the normal operating position.

Before Operation Safety

General Safety

- Become familiar with the safe operation of the equipment, operator controls, and safety signs.
- Check that all guards and safety devices are in place and working properly.
- Always inspect the machine to ensure that the blade, blade bolts, and cutting assembly are not worn or damaged.
- Inspect the area where you will use the machine and remove all objects that the machine could throw.

Fuel Safety

⚠ DANGER

Fuel is extremely flammable and highly explosive. A fire or explosion from fuel can burn you and others and can damage property.

- **To prevent a static charge from igniting the fuel, place the container and/or machine directly on the ground before filling, not in a vehicle or on an object.**
- **Fill the fuel tank outdoors, in an open area, when the engine is cold. Wipe up any fuel that spills.**
- **Do not handle fuel when smoking or around an open flame or sparks.**
- **Store fuel in an approved container and keep it out of the reach of children.**

⚠ WARNING

Fuel is harmful or fatal if swallowed. Long-term exposure to vapors can cause serious injury and illness.

- **Avoid prolonged breathing of vapors.**
- **Keep your hands and face away from the nozzle and the fuel-tank opening.**
- **Keep fuel away from your eyes and skin.**

Recommended Fuel

- For best results, use only clean, fresh (less than 30 days old), unleaded gasoline with an octane rating of 87 or higher ((R+M)/2 rating method).
- **Ethanol**: Gasoline with up to 10% ethanol (gasohol) or 15% MTBE (methyl tertiary butyl ether) by volume is acceptable. Ethanol and MTBE are not the same. Gasoline with 15% ethanol (E15) by volume is not approved for use. **Never use gasoline that contains more than 10% ethanol by volume**, such as E15 (contains 15% ethanol), E20 (contains 20% ethanol), or E85 (contains up to 85% ethanol). Using unapproved gasoline may cause performance problems and/or engine damage which may not be covered under warranty.
- **Do not** use gasoline containing methanol.
- **Do not** store fuel either in the fuel tank or fuel containers over the winter unless you use a fuel stabilizer.
- **Do not** add oil to gasoline.

Using Stabilizer/Conditioner

Use a fuel stabilizer/conditioner in the machine to provide the following benefits:

- Keeps gasoline fresh during storage of 90 days or less. For longer storage it is recommended that the fuel tank be drained.
- Cleans the engine while it runs
- Eliminates gum-like varnish buildup in the fuel system, which causes hard starting

Important: Do not use fuel additives containing methanol or ethanol.

Add the correct amount of fuel stabilizer/conditioner to the gasoline.

Note: A fuel stabilizer/conditioner is most effective when mixed with fresh gasoline. To minimize the chance of varnish deposits in the fuel system, use fuel stabilizer at all times.

Filling the Fuel Tank

1. Park the machine on a level surface and shut off the engine.
2. Allow the engine to cool.
3. Clean around the fuel-tank cap and remove it (Figure 7).
4. Add fuel to the fuel tank until the level of fuel is at the bottom of the filler neck.
5. Install the fuel-tank cap securely.
6. Wipe up any fuel that may have spilled.

Checking the Engine-Oil Level

Before you start the engine and use the machine, check the oil level in the engine crankcase; refer to Checking the Engine-Oil Level (page 19).

Think Safety First

Carefully read all the safety instructions and decals in the safety section. Knowing this information could help you or bystanders avoid injury.

⚠ CAUTION

This machine produces sound levels in excess of 85 dBA at the operator's ear and can cause hearing loss from extended periods of exposure.

Wear hearing protection when operating this machine.

Use protective equipment for your eyes, ears, hands, feet, and head.

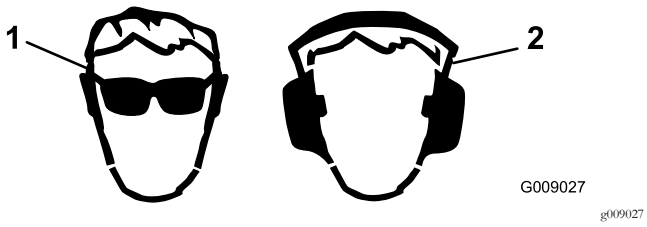

Figure 12

1. Wear eye protection.
2. Wear hearing protection.

During Operation

During Operating Safety

General Safety

- Wear appropriate clothing, including eye protection; slip-resistant, substantial footwear; thickly padded gloves; and hearing protection. Tie back long hair, secure loose clothing, and do not wear jewelry.
- Do not operate the machine while ill, tired, or under the influence of alcohol or drugs.
- The blade is sharp; contacting the blade can result in serious personal injury. Shut off the engine and wait for all moving parts to stop before leaving the operating position.
- When you release the blade-control clutch, the blade should stop within 7 seconds. If not, stop using your machine immediately and contact an Authorized Service Dealer.
- Operate the machine only in good visibility and appropriate weather conditions. Do not operate the machine when there is the risk of lightning.
- Wet grass or leaves can cause serious injury if you slip and contact the blade. Avoid mowing in wet conditions.
- Use extreme care when approaching blind corners, shrubs, trees, or other objects that may block your view.
- Watch for holes, ruts, bumps, rocks, or other hidden objects. Uneven terrain could cause a slip-and-fall accident.
- Shut off the machine and inspect the blade after striking an object or if there is an abnormal vibration in the machine. Make all necessary repairs before resuming operation.
- Before leaving the operating position, shut off the engine, and wait for all moving parts to stop.
- If the engine has been running the muffler will be hot and can severely burn you. Keep away from the hot muffler.
- Use accessories and attachments approved by the The Toro® Company only.

Slope Safety

- Use the machine across the face of slopes; never up and down. Use extreme caution when changing direction on slopes.
- Do not use the machine on excessively steep slopes. Poor footing could cause a slip-and-fall accident.
- Use the machine with caution near drop-offs, ditches, or embankments.

Operating the Ignition Switch

1. Turn the ignition key to the START position (Figure 13).

   Note: When the engine starts, release the key.

   Important: Do not engage the starter for more than 5 seconds at a time. If the engine fails to start, wait 15 seconds between attempts. Failure to follow these instructions can burn out the starter motor.

   Note: You may need multiple attempts to start the engine when you start it the first time after the fuel system has been without fuel completely.

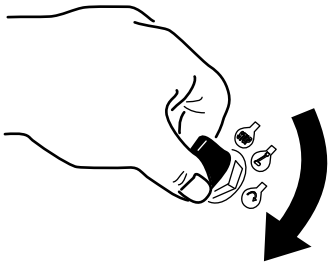

g192135

Figure 13

2. Turn the ignition key to the STOP position to shut off the engine.

Starting and Shutting Off the Engine

Starting the Engine

1. Move the throttle lever forward past the FAST position and hold it against the forward stop to activate the choke.
2. Turn the ignition switch to the START position.
3. When the engine starts, release the key and move the throttle lever back to the FAST position.

Shutting Off the Engine

1. Release the blade-control clutch to disengage the blade.
2. Turn the ignition switch to the OFF position and remove the key.

Operating the Traction Control

To move the machine forward, squeeze the traction control toward the hand grip (Figure 13).

To move the machine rearward, push the thumb pad down to move the traction control away from the hand grip (Figure 13).

The more you move the traction control in either direction, the faster the machine moves in that direction.

To disengage the traction drive, release the traction control.

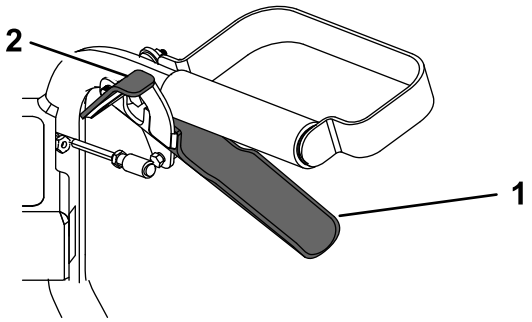

g186864

Figure 14

1. Traction control
2. Thumb pad

Operating the Blade-Control Clutch

This machine is capable of cutting brush and saplings up to 1.8 m (6 feet) tall and 5.1 cm (2 inches) in diameter. The cutting deck pivots to follow the ground contour as you move the machine.

To engage the blade, use your right hand to open the safety latch and then use your left hand to squeeze the blade-control clutch to the left handle (Figure 14).

To disengage the blade, release the blade-control clutch.

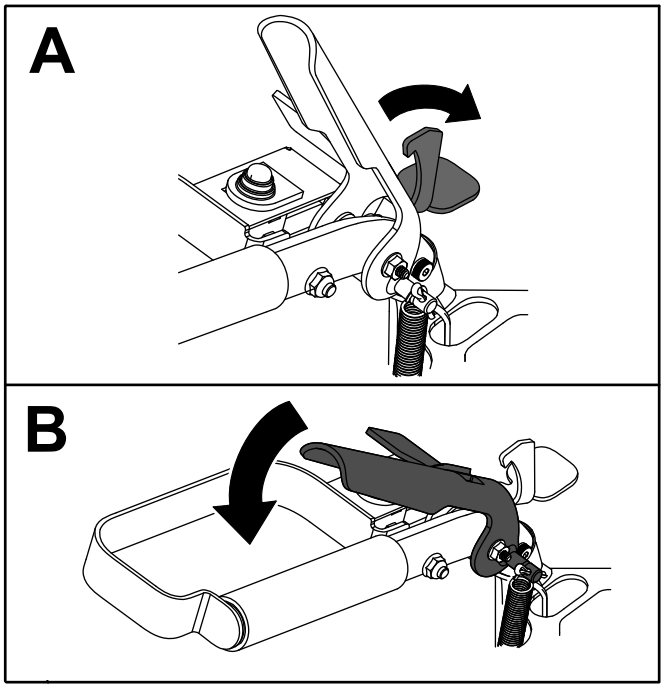

g188811

Figure 15

After Operation

After Operation Safety

General Safety

- Clean grass and debris from the machine to help prevent fires. Clean up oil or fuel spills.
- Allow the engine to cool before storing the machine in any enclosure.
- Never store the machine or fuel container where there is an open flame, spark, or pilot light, such as on a water heater or on other appliances.

Hauling Safety

- Use care when loading or unloading the machine into a trailer or truck.
- Secure the machine from rolling.

Moving a Nonfunctioning Machine

1. Park the machine on a level surface and disengage the blade-control clutch.
2. Engage the parking brake, shut off the engine, remove the key, and wait for all moving parts to stop.
3. Move the bypass lever outward through the keyhole and down to lock it in place.
4. Disengage the parking brake.
5. Push the machine as required.
6. Engage the parking brake.
7. Move the bypass lever up and inward through the keyhole to disengage the bypass.

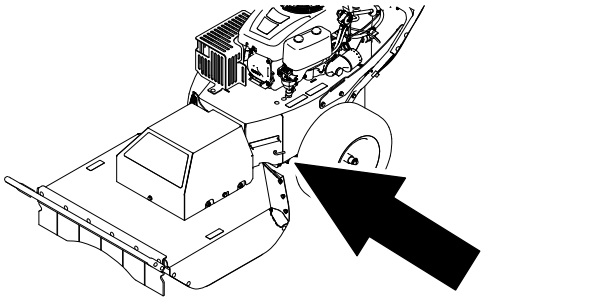

g188886

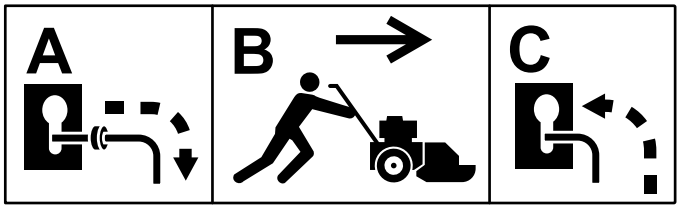

g188887

Figure 16

Transporting the Machine

Use a heavy-duty trailer or truck to transport the machine. Ensure that the trailer or truck has all necessary brakes, lighting, and marking as required by law. Please carefully read all the safety instructions. Knowing this information could help you, your family, pets, or bystanders avoid injury.

1. If using a trailer, connect it to the towing vehicle and connect the safety chains.
2. If applicable, connect the trailer brakes.
3. Load the machine onto the trailer or truck.
4. Shut off the engine, remove the key, engage the parking brake, and close the fuel valve.
5. Use the brush bar and 2 tie-down loops on the machine to securely fasten the machine to the trailer or truck with straps, chains, cable, or ropes (Figure 17).

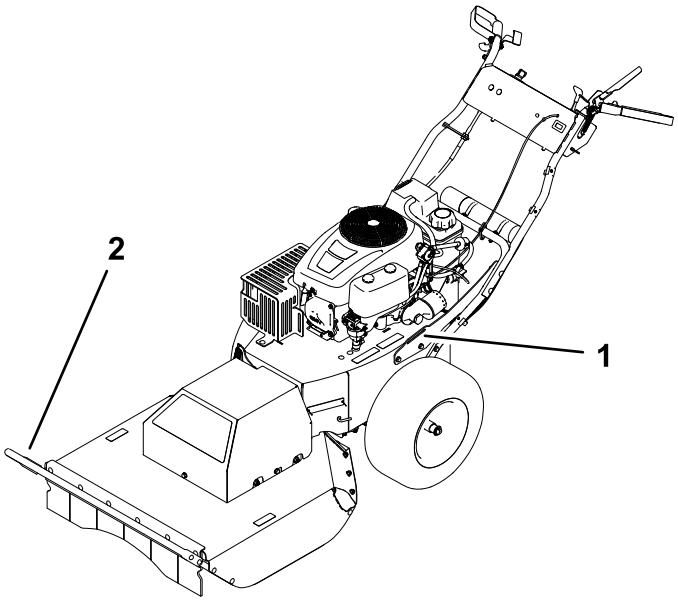

g188889

Figure 17

1. Left tie-down loop
2. Brush bar

Maintenance

Note: Determine the left and right sides of the machine from the normal operating position.

Recommended Maintenance Schedule(s)

Maintenance Service Interval	Maintenance Procedure
After the first 5 hours	• Change the engine oil and filter.
Before each use or daily	• Clean and check the air-cleaner foam and paper elements. • Check the engine-oil level. • Inspect the condition of the tires. • Clean the engine air-intake screen. • Inspect the blade. • Remove debris from the machine.
Every 25 hours	• Check tire pressure. • Check the belts for wear/cracks.
Every 50 hours	• Replace the air-cleaner foam and paper elements. • Check the spark plug.
Every 100 hours	• Change the engine oil and filter (change it more often under a heavy load or in high temperatures). • Replace the spark plug. • Replace the in-line fuel filter. • Clean the engine-cooling fins and shrouds.
Before storage	• Charge the battery and disconnect battery cables. • Change the engine oil and filter. • Service the air cleaner. • Empty the fuel tank. • Lubricate inside the engine cylinder.

Maintenance Safety

- Disconnect the spark-plug wire from the spark plug before performing any maintenance procedure.
- Wear gloves and eye protection when servicing the machine.
- The blade is sharp; contacting the blade can result in serious personal injury. Wear gloves when servicing the blade.
- Never tamper with safety devices. Check their proper operation regularly.
- Tipping the machine may cause the fuel to leak. Fuel is flammable and explosive, and can cause personal injury. Run the engine dry or remove the fuel with a hand pump; never siphon the fuel.

Engine Maintenance

Engine Safety

Shut off the engine before checking the oil or adding oil to the crankcase.

Servicing the Air Cleaner

Service Interval: Before each use or daily—Clean and check the air-cleaner foam and paper elements.

Every 50 hours—Replace the air-cleaner foam and paper elements.

Note: Service the air cleaner more frequently if the operating conditions are extremely dusty or sandy.

Removing the Foam and Paper Elements

1. Park the machine on a level surface, shut off the engine, wait for all moving parts to stop, and remove the key from the ignition switch before leaving the operating position.
2. Clean around the air cleaner to prevent dirt from getting into the engine and causing damage.
3. Remove the air-cleaner cover by unscrewing the 2 knobs (Figure 18).

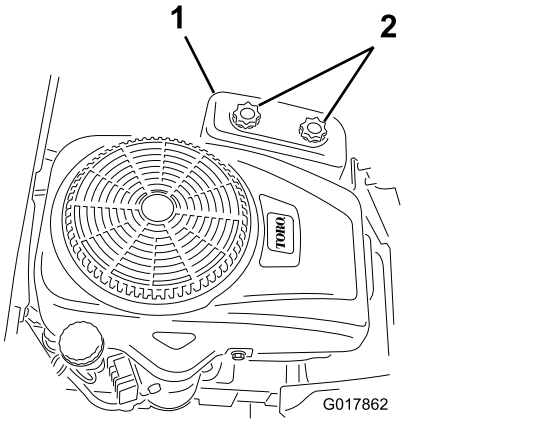

g017862

Figure 18

1. Air-cleaner cover
2. Knobs

4. Remove the 2 nuts securing the filter assembly to the housing (Figure 19).

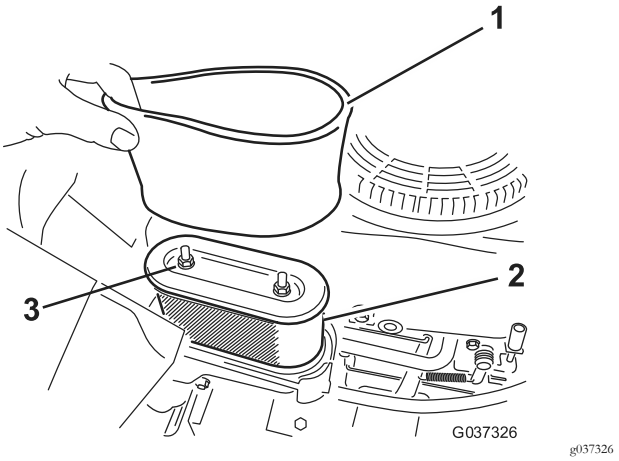

g037326

Figure 19

1. Foam element
2. Paper element
3. Nuts

5. Carefully remove the foam and paper-filter elements from the air-cleaner housing.
6. Separate the foam and paper elements.

Cleaning the Foam and Paper Elements

Foam Element:

1. Wash the foam element in liquid soap and warm water.
2. When the element is clean, rinse it thoroughly.
3. Dry the element by squeezing it in a clean cloth.

   Note: Do not oil the element.

   Important: Replace the foam element if it is torn or worn.
4. Install the foam element onto a clean paper element.

Paper Element:

1. Tap the paper element on a solid, flat surface, and blow it out from the inside with compressed air to remove dust and dirt.
2. Inspect the element for tears, an oily film, and damage to the rubber seal.

   Important: Do not clean the paper element with liquids, such as solvents, gasoline, or kerosene. Replace the paper element if it is damaged or cannot be cleaned thoroughly.
3. Clean the inside of the air-cleaner cover of all dirt, dust, and debris.

Installing the Foam and Paper Elements

Important: To prevent engine damage, always operate the engine with the complete foam and paper-air cleaner assembly installed.

1. Install the foam filter onto the paper filter (Figure 19).
2. Install the foam and paper filter into the air-cleaner housing.
3. Secure the filter assembly to the housing using the 2 nuts (Figure 19).
4. Install the air-cleaner cover, and tighten the 2 knobs (Figure 18).

Servicing the Engine Oil

Oil Type: Detergent oil (API service SF, SG, SH, SJ, or higher)

Crankcase Capacity: 1.4 L (48 oz) when you change the filter.

Viscosity: See the table below.

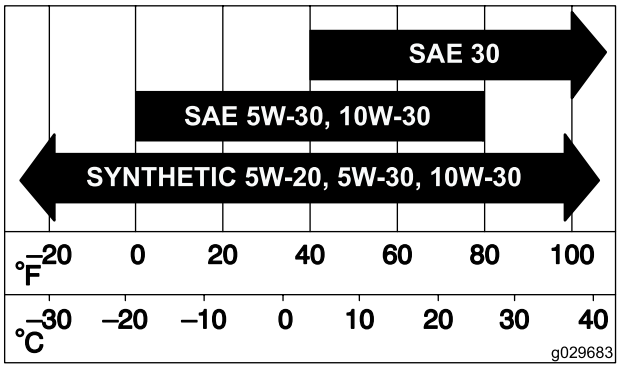

g029683

Figure 20

Checking the Engine-Oil Level

Service Interval: Before each use or daily

Note: Check the oil when the engine is cold.

⚠ WARNING

Contact with hot surfaces may cause personal injury.

Keep hands, feet, face, clothing and other body parts away the muffler and other hot surfaces.

Important: Do not overfill the crankcase with oil and run the engine; engine damage may result.

1. Park the machine on a level surface, shut off the engine, wait for all moving parts to stop, and remove the key from the ignition switch before leaving the operating position.
2. Check the engine-oil level (Figure 21).

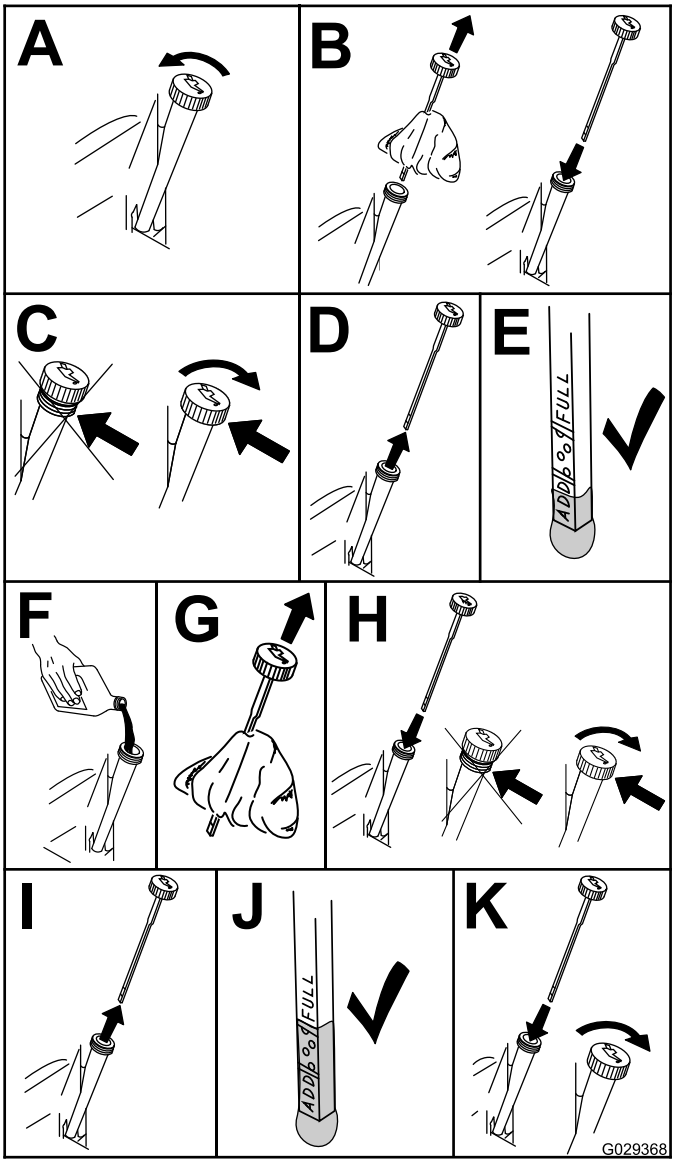

g029368

Figure 21

Changing the Engine Oil and Filter

Service Interval: After the first 5 hours

Every 100 hours (change it more often under a heavy load or in high temperatures).

Note: Change the engine-oil filter more frequently when the operating conditions are extremely dusty or sandy.

1. Park the machine on a level surface, shut off the engine, wait for all moving parts to stop, and remove the key from the ignition switch before leaving the operating position.
2. Drain the oil from the engine (Figure 22).

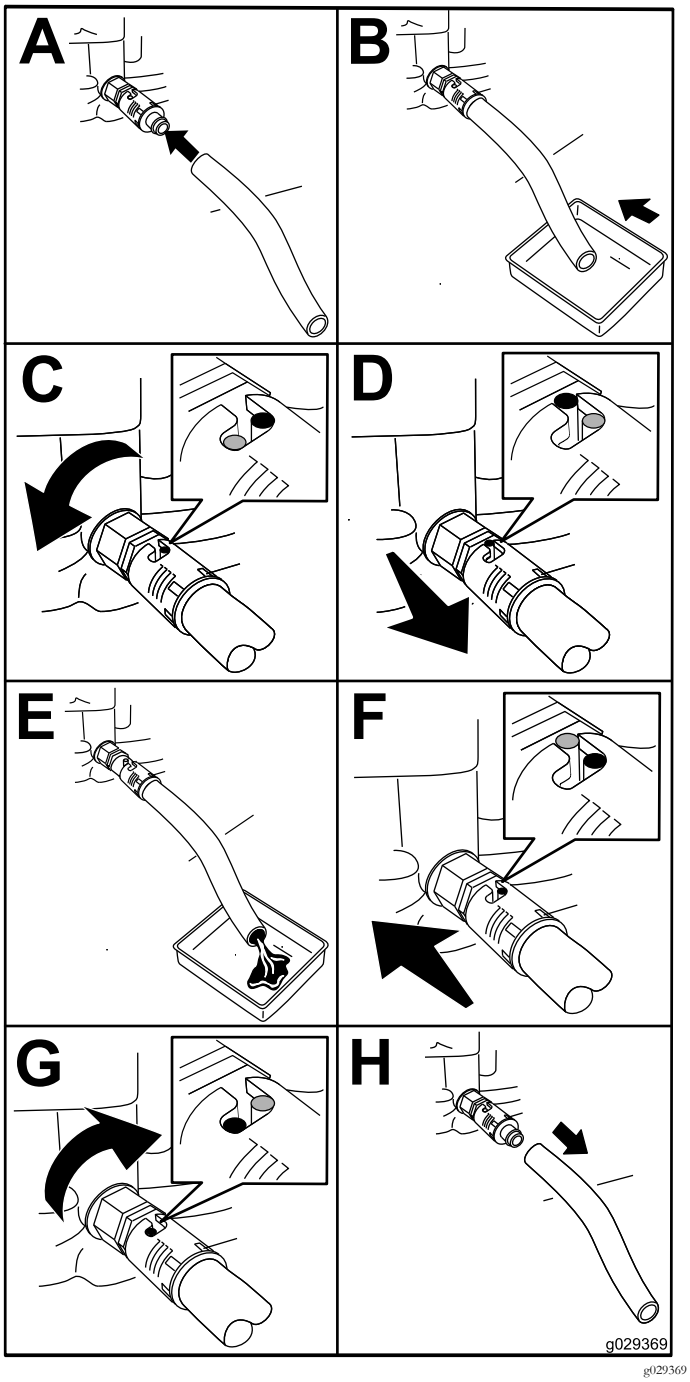

g029369

Figure 22

3. Remove the engine-oil filter (Figure 23). After the oil is drained, install a new oil filter.

   Note: Ensure the new oil-filter gasket touches the engine, and then an extra 3/4 turn is completed.

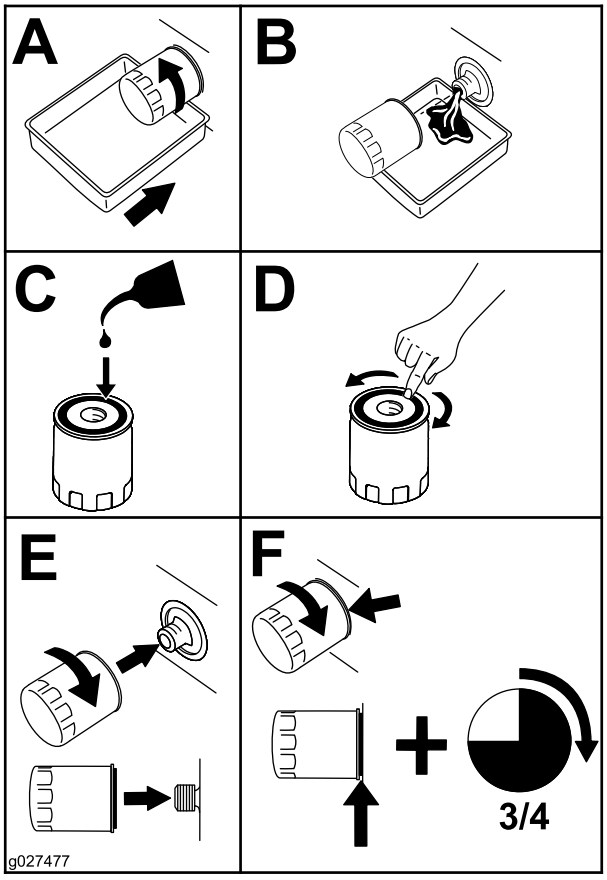

g027477

Figure 23

4. Slowly pour approximately 80% of the specified amount of oil into the fill hole (Figure 24).
5. Allow 3 to 5 minutes for the oil to settle, then check the oil level (Figure 24).

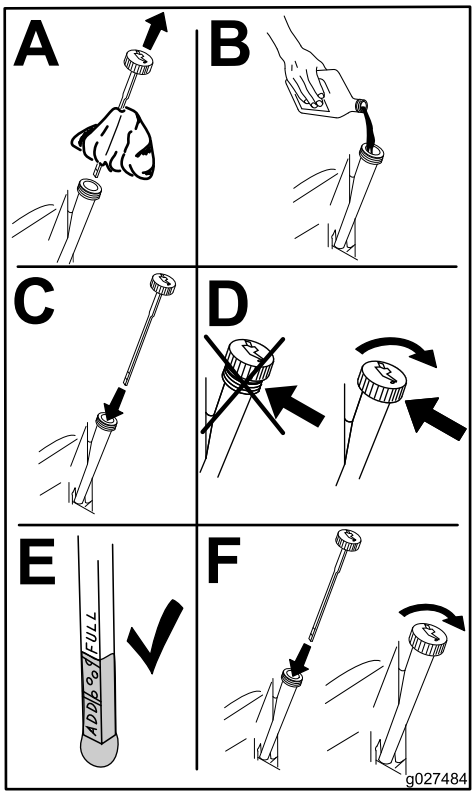

g027484

Figure 24

6. Add oil to the machine so that the oil level reaches the "Full" mark on the dipstick.

Servicing the Spark Plug

Service Interval: Every 50 hours—Check the spark plug.

Every 100 hours—Replace the spark plug.

Ensure that the air gap between the center and side electrodes is correct before installing the spark plug. Use a spark plug wrench for removing and installing the spark plug and a gapping tool or feeler gauge to check and adjust the air gap. Install a new spark plug if necessary.

Type: Champion® RC12YC, Autolite® 3924, or NGK® BPR6ES

Air Gap: 0.76 mm (0.030 inch)

Removing the Spark Plug

1. Park the machine on a level surface, shut off the engine, and remove the key from the ignition switch.
2. Before removing the spark plug(s), clean the area around the base of the plug to keep dirt and debris out of the engine.
3. Remove the spark plug (Figure 25).

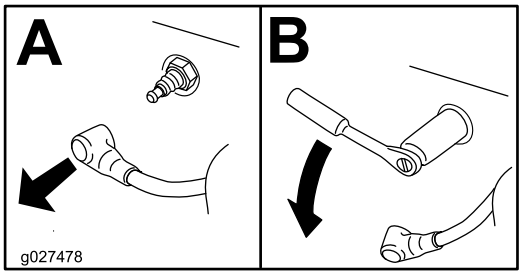

g027478

Figure 25

Checking the Spark Plug

Important: Do not clean the spark plug(s). Always replace the spark plug(s) when it has: a black coating, worn electrodes, an oily film, or cracks.

Note: If you see light brown or gray on the insulator, the engine is operating properly. A black coating on the insulator usually means the air cleaner is dirty.

Set the gap to 0.76 mm (0.030 inch).

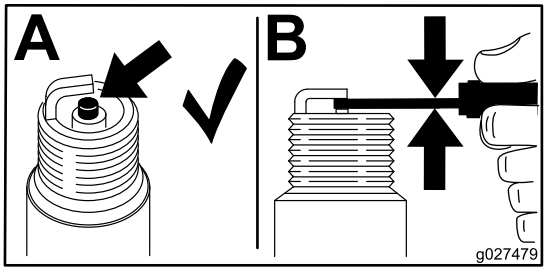

g027479

Figure 26

Installing the Spark Plug

Tighten the spark plug to 20 N·m (15 ft-lb).

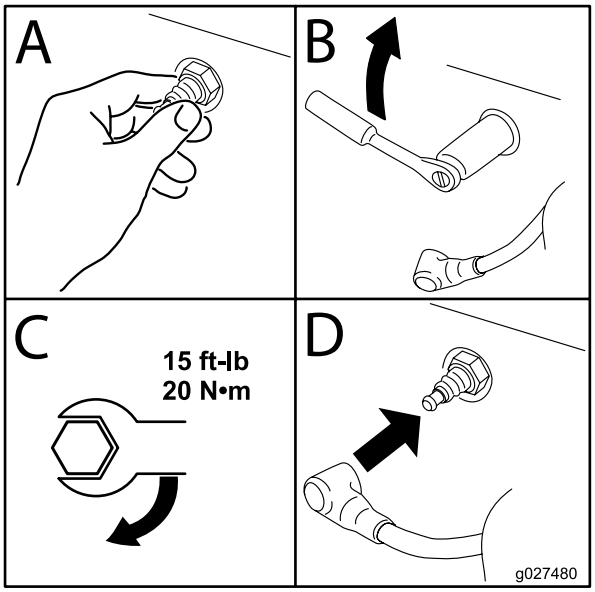

g027480

Figure 27

Fuel System Maintenance

⚠ DANGER

In certain conditions, gasoline is extremely flammable and highly explosive. A fire or explosion from gasoline can burn you, others, and can damage property.

- **Perform any fuel-related maintenance when the engine is cold. Do this outdoors in an open area. Wipe up any gasoline that spills.**
- **Never smoke when draining gasoline, and stay away from an open flame or where a spark may ignite the gasoline fumes.**

Replacing the In-Line Fuel Filter

Service Interval: Every 100 hours—Replace the in-line fuel filter.

Never install a dirty filter if it is removed from the fuel line.

1. Park the machine on a level surface, shut off the engine, and remove the key from the ignition switch.
2. Close the fuel-shutoff valve.
3. Replace the in-line filter (Figure 28).

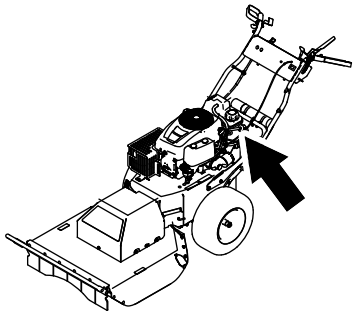

g186943

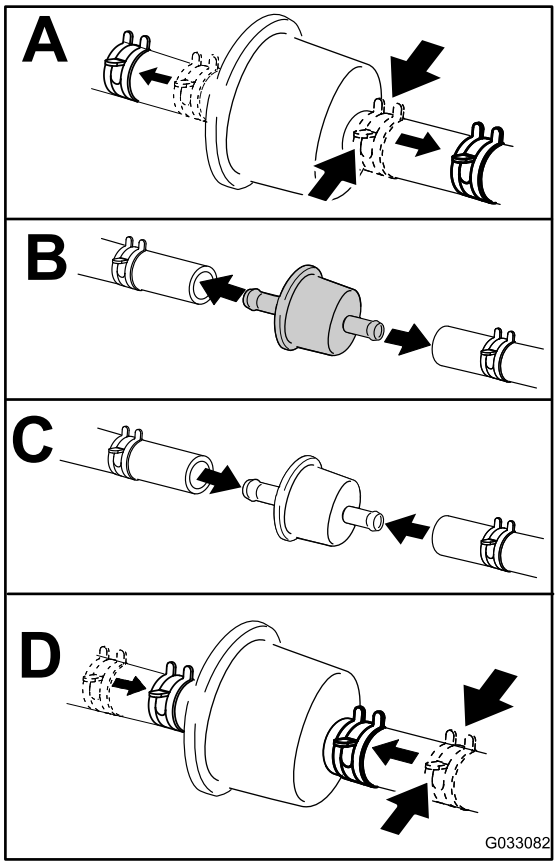

g033082

Figure 28

Electrical System Maintenance

Electrical System Safety

- Disconnect the battery before repairing the machine. Disconnect the negative terminal first and the positive last. Connect the positive terminal first and the negative last.
- Charge the battery in an open, well-ventilated area, away from sparks and flames. Unplug the charger before connecting or disconnecting the battery. Wear protective clothing and use insulated tools.

WARNING

CALIFORNIA
Proposition 65 Warning

Battery posts, terminals, and related accessories contain lead and lead compounds, chemicals known to the State of California to cause cancer and reproductive harm. Wash hands after handling.

Removing the Battery

⚠ WARNING

Battery terminals or metal tools could short against metal machine components, causing sparks. Sparks can cause the battery gasses to explode, resulting in personal injury.

- **When removing or installing the battery, do not allow the battery terminals to touch any metal parts of the machine.**
- **Do not allow metal tools to short between the battery terminals and metal parts of the machine.**

⚠ WARNING

Incorrect battery-cable routing could damage the machine and cables causing sparks. Sparks can cause the battery gasses to explode, resulting in personal injury.

- **Always disconnect the negative (black) battery cable before disconnecting the positive (red) cable.**
- **Always connect the positive (red) battery cable before connecting the negative (black) cable.**

1. Park the machine on a level surface, shut off the engine, and remove the key from the ignition switch.
2. Disconnect the negative (black) battery cable from the battery.
3. Disconnect the positive (red) battery cable from the battery.
4. Remove the nuts and securing rods from both sides of the battery, battery cover, and battery tray.

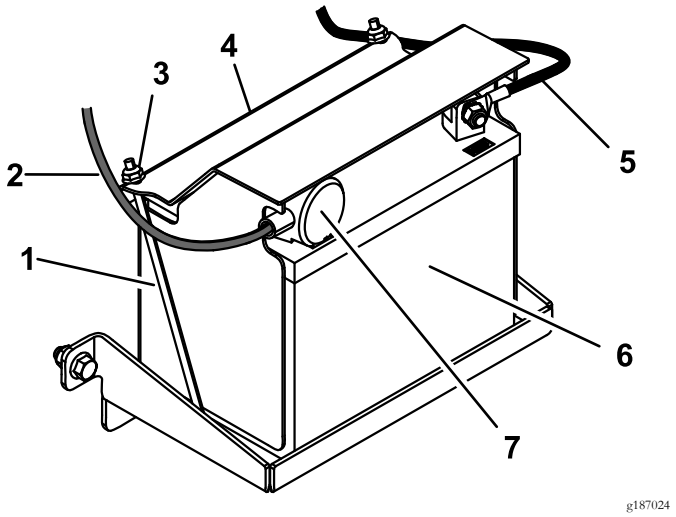

Figure 29

1. Securing rod (2)
2. Positive battery cable
3. Nut (2)
4. Battery cover
5. Negative battery cable
6. Battery
7. Red terminal boot

Charging the Battery

Service Interval: Before storage—Charge the battery and disconnect battery cables.

1. Remove the battery from the chassis; refer to Removing the Battery (page 23).
2. Charge the battery for a minimum of 1 hour at 6 to 10 amps.

   Note: Do not overcharge the battery.
3. When the battery is fully charged, unplug the charger from the electrical outlet, then disconnect the charger leads from the battery posts (Figure 30).

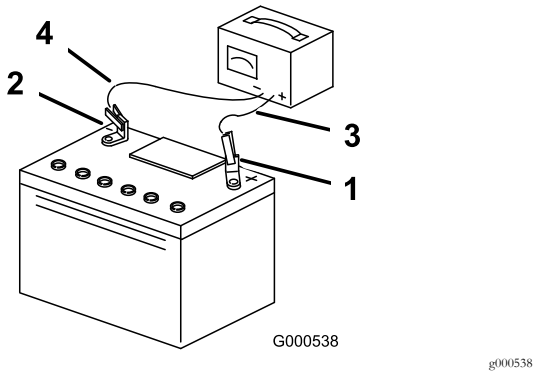

Figure 30

1. Positive (+) battery post
2. Negative (–) battery post
3. Red (+) charger lead
4. Black (–) charger lead

Installing the Battery

1. Place the battery on the tray and secure it using the battery cover, 2 securing rods, and 2 nuts (Figure 29).
2. Install the positive battery cable to the positive (+) battery post.
3. Install the negative battery cable to the negative (-) battery post.
4. Slide the red terminal boot onto the positive battery post (Figure 29).

Servicing a Replacement Battery

The original battery is maintenance-free and does not require service. For servicing a replacement battery, refer to the battery manufacturer's instructions.

Drive System Maintenance

Checking the Tire Pressure

Service Interval: Before each use or daily

Every 25 hours—Check tire pressure.

Maintain the air pressure in the tires as specified. Check the pressure at the valve stem (Figure 31). Check the tires when they are cold to get the most accurate pressure reading.

Inflate the tires to 97 kPa (14 psi).

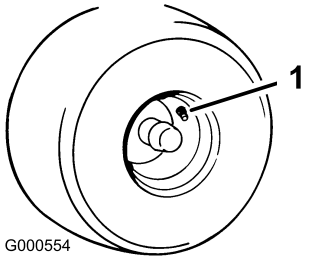

g000554

Figure 31

1. Valve stem

Cooling System Maintenance

Cleaning the Engine Screen

Service Interval: Before each use or daily—Clean the engine air-intake screen.

To ensure proper cooling, ensure that the air-intake screen, cooling fins, and other external surfaces of the engine are kept clean at all times.

Use a dry brush to clean accumulated debris from the air-intake screen and around the engine.

Important: To prevent contaminating the fuel system, do not use water to clean the engine.

Cleaning the Engine-Cooling Fins and Shrouds

Service Interval: Every 100 hours—Clean the engine-cooling fins and shrouds.

1. Park the machine on a level surface, shut off the engine, and remove the key from the ignition switch.
2. Remove the air-intake screen and cooling shrouds.
3. Clean the debris and grass from the engine parts.
4. Install the air-intake screen and cooling shrouds.

Belt Maintenance

Inspecting the Belts

Service Interval: Every 25 hours—Check the belts for wear/cracks.

Check the belts for cracks, frayed edges, burn marks, or any other damage. Replace damaged belts.

Replacing the Transmission Belt

1. Park the machine on a level surface, disengage the blade, and engage the parking brake.
2. Turn the ignition key to the OFF position, remove the key, and disconnect the spark plug wire from the spark plug.
3. Raise the machine using a hoist or jackstands.
4. Remove the extension spring from the tension arm (Figure 32).

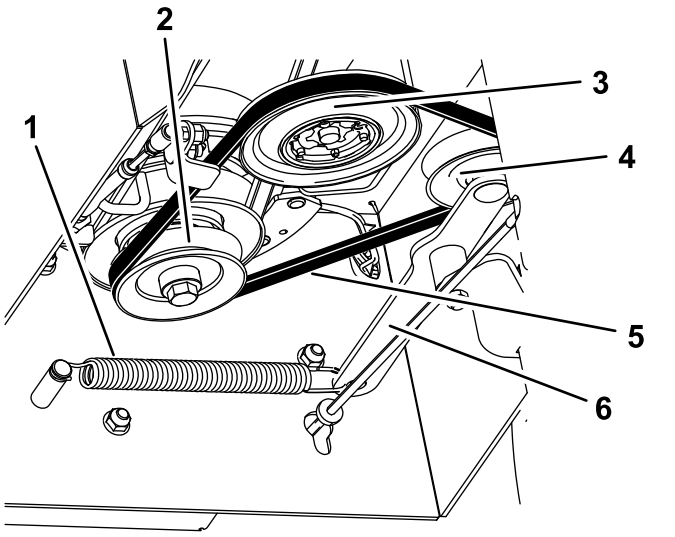

Figure 32
Transmission not shown

1. Extension spring
2. Clutch pulley
3. Transmission pulley
4. Tension pulley
5. Belt
6. Tension arm

5. Remove the transmission belt from the pulleys.
6. Wrap the new transmission belt around the clutch, transmission, and tension pulleys (Figure 32).
7. Install the extension spring onto the tension arm.

Replacing the Mower Belt

1. Park the machine on a level surface, disengage the blade, and engage the parking brake.
2. Turn the ignition key to the OFF position, remove the key, and disconnect the spark plug wire from the spark plug.
3. Raise the machine using a hoist or jackstands.
4. Remove the transmission belt; refer to Replacing the Transmission Belt (page 26).
5. Loosen the left and right side bolts a few turns, and loosen the front bolt until the cover is loose (Figure 33).

Note: Do not remove the bolts.

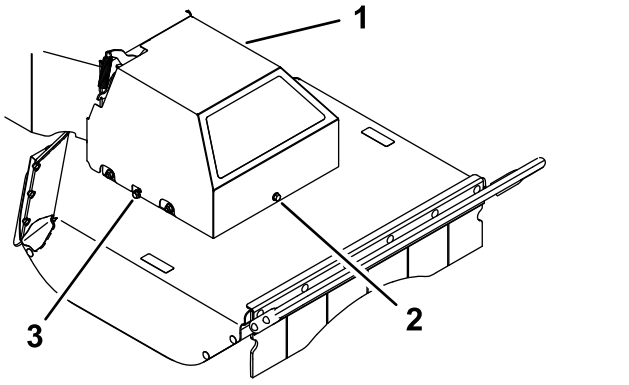

Figure 33

1. Belt cover
2. Front bolt
3. Right side bolt

6. Lift the cover upward to remove it.
7. Detach the extension spring (Figure 34).

⚠ CAUTION

The spring is under tension when installed and can cause personal injury.

Wear safety glasses and be careful when removing the spring.

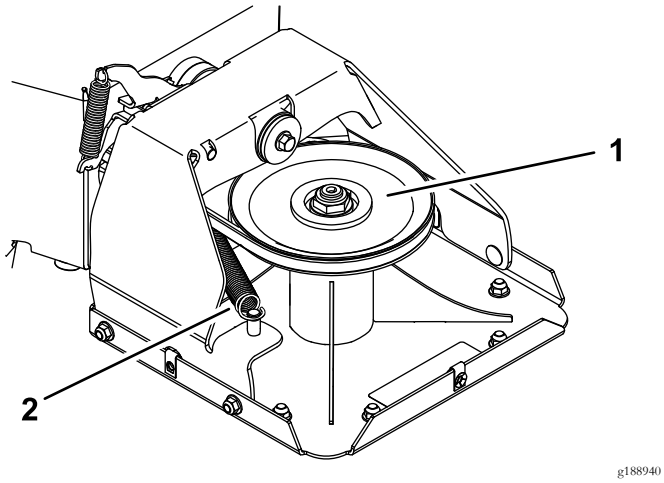

Figure 34

1. Deck pulley
2. Extension spring

8. Remove the mower belt from the clutch pulley.
9. Route the new belt around the clutch pulley, through the belt guide, along the idler pulley, and around the deck pulley (Figure 34 and Figure 35).

   Note: Ensure that the belt is seated correctly on both pulleys, with no twists. The belt needs to be in this position until you install the extension spring.

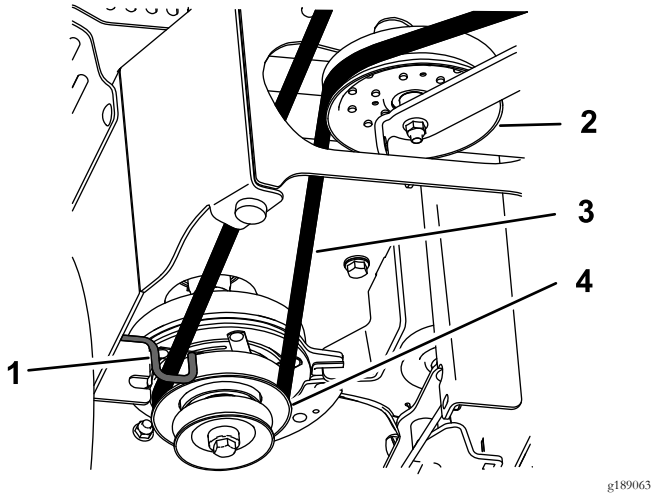

Figure 35
Transmission not shown

1. Belt guide
2. Idler pulley
3. Mower belt
4. Clutch pulley

10. Install the extension spring (Figure 34).
11. Lower the belt cover onto the deck, aligning the slots in the cover with the side bolts. Tighten the front bolt, then tighten both side bolts (Figure 33).
12. Install the transmission belt; refer to Replacing the Transmission Belt (page 26).

Mower Maintenance

To ensure a superior quality of cut, keep the blade sharp. For convenient sharpening and replacement, you may want to keep extra blades on hand.

Blade Safety

A worn or damaged blade can break, and a piece of the blade could be thrown at you or bystanders, resulting in serious personal injury or death. Trying to repair a damaged blade may result in discontinued safety certification of the product.

- Inspect the blade periodically for wear or damage.
- Use care when checking the blade. Wrap the blade or wear gloves, and use caution when servicing the blade. Only replace or sharpen the blade; never straighten or weld them.

Before Inspecting or Servicing the Blade

1. Park the machine on a level surface, disengage the blade, and engage the parking brake.
2. Turn the ignition key to the OFF position, remove the key, and disconnect the spark plug wires from the spark plugs.
3. Tilt the machine so that the deck is off the ground and place wood blocks under the deck to hold it up.

Inspecting the Blade

Service Interval: Before each use or daily

1. Inspect the cutting edges (Figure 36).
2. If the edges are not sharp or have nicks, remove and sharpen the blade; refer to Sharpening the Blade (page 29).
3. Inspect the blade.
4. If you notice any crack or wear, immediately install a new blade (Figure 36).

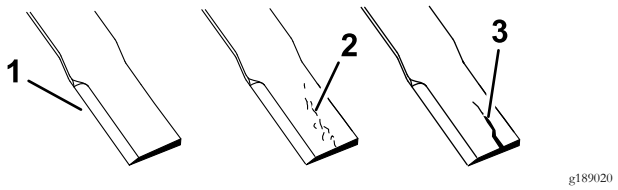

Figure 36

1. Cutting edge
2. Wear
3. Crack

Checking for a Bent Blade

Straight Blade Only

⚠ WARNING

A blade that is bent or damaged could break apart and could seriously injure or kill you or bystanders.

- **Always replace a bent or damaged blade with a new blade.**
- **Do not file or create sharp notches in the edges or surfaces of the blade.**

1. Rotate the blade until the ends face forward and backward.
2. Measure from a level surface to the cutting edge, position **A**, of the blade (Figure 37).

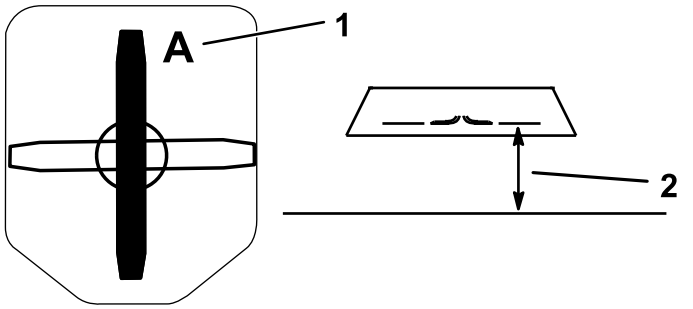

Figure 37

1. Position A
2. Measure here from blade to hard surface.

3. Rotate the opposite ends of the blade forward.
4. Measure from a level surface to the cutting edge of the blade at the same position as in step 2 above.

   Note: The difference between the dimensions obtained in steps 2 and 4 must not exceed 3 mm (1/8 inch).

   Note: If this dimension exceeds 3 mm (1/8 inch), the blade is bent and must be replaced.

Removing the Blade

Replace the blade if it hits a solid object, if the blade is out of balance, or if a blade is bent. To ensure optimum performance and continued safety conformance of the machine, use genuine Toro replacement blades. Replacement blades made by other manufacturers may result in nonconformance with safety standards.

Note: Flail blades are sharpened on 2 sides, so you can turn over a blade when you remove it for a new sharp edge

Flail Blade Only

1. Hold the blade end using a rag or a thickly padded glove.
2. Remove the blade bolt, the curved washer, and blade from the blade mount on the bottom of the spindle-cup assembly (Figure 38).

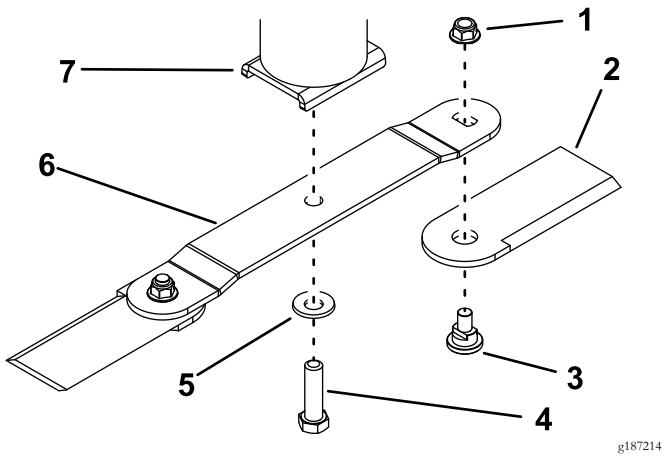

Figure 38

1. Nut
2. Flail
3. Flail bolt
4. Blade bolt
5. Curved washer
6. Blade
7. Spindle-cup assembly

3. To remove only the flail blades, remove the flails from the blade by removing the flail bolt and nut from each flail.

Straight Blade Only

1. Hold the blade end using a rag or thickly-padded glove.
2. Remove the blade bolt, curved washer, and blade from the spindle cup assembly (Figure 39).

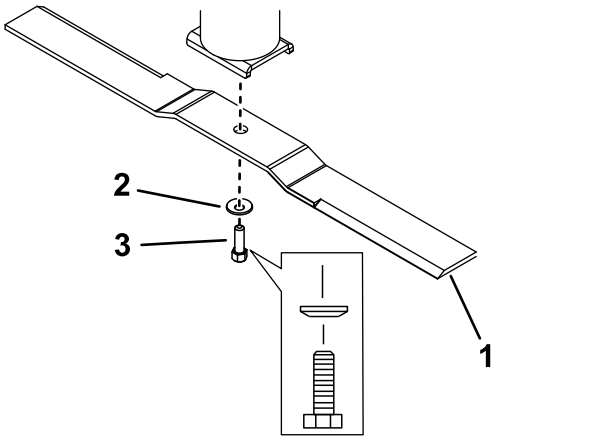

g189023

Figure 39

1. Blade
2. Curved washer
3. Blade bolt

Sharpening the Blade

1. Use a file to sharpen the cutting edge at both ends of the blade (Figure 40).

   Note: Maintain the original angle.

   Note: The blade retains balance if the same amount of material is removed from both cutting edges.

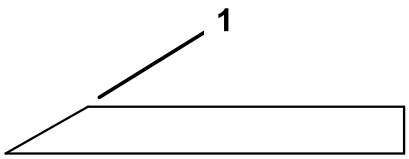

g192119

Figure 40

1. Sharpen at the original angle

2. For straight blades only, check the balance of the blade by putting it on a blade balancer (Figure 41).

   If the blade is not balanced, file some metal off the back side of the blade (opposite of the cutting edge) only (Figure 38).

   Repeat this procedure until the blade is balanced.

   Note: If the blade stays in a horizontal position, the blade is balanced.

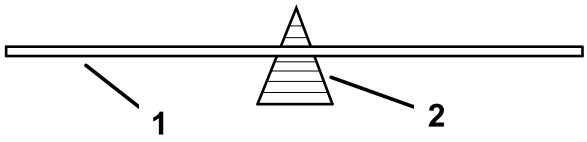

g192120

Figure 41

1. Blade
2. Balancer

Installing the Blade

Flail Blade Only

1. Attach the blade to the spindle cup assembly using the blade bolt and curved washer (Figure 38).

   Note: Ensure that cupped side of the washer faces the blade, and the convex side of the blade faces the spindle cup.

2. Torque the bolt to 136 to 149 N·m (100 to 110 ft-lb).
3. To install only the flail blades, secure the flails to the end of the blade using the flail bolt and a new nut for each flail (Figure 38). Torque the nut to 103 to 127 N·m (76 to 94 ft-lb).

   Note: Always replace a removed flail nut with a new nut.

   Note: Secure the flails to the bottom of the blade, not the top.

Straight Blade Only

1. Install the blade onto the spindle shaft (Figure 39).

   Note: Ensure that the convex side of the blade faces the spindle cup.

2. Install the curved washer (cupped side toward the blade) and blade bolt (Figure 39).
3. Torque the blade bolt to 136 to 149 N·m (100 to 110 ft-lb).

Cleaning

Removing Debris from the Machine

Regular cleaning and washing increases the lifespan of the machine. Clean the machine directly after use.

Check before cleaning that the fuel tank cap is properly in place to avoid getting water in the tank.

Use care when using a high-pressure sprayer, because it can damage warning decals, instruction signs, and the engine.

Storage

Storing the Machine

For storage over 30 days, prepare the machine as follows:

1. Park the machine on a level surface, disengage the blade, and engage the parking brake.
2. Turn the ignition key to the OFF position, remove the key, and disconnect the spark plug wire from the spark plug.
3. Remove debris, dirt, and grime from the external parts of the entire machine, especially the engine.

   Important: You can wash the unit with mild detergent and water.
4. Add a petroleum-based stabilizer/conditioner to fuel in the tank. Follow mixing instructions from stabilizer manufacturer. (7.8 ml per L or 1 oz per US gallon).

   Note: Fuel stabilizer/conditioner is most effective when mixed with fresh fuel and used at all times.

   Important: Do not use an alcohol-based stabilizer (ethanol or methanol). Do not store stabilizer/conditioned fuel over 90 days.
5. Run the engine to distribute conditioned fuel through the fuel system (5 minutes).
6. Shut off the engine, allow it to cool, and drain the fuel tank using a pump type siphon. Dispose of fuel properly; recycle as per local codes.
7. Start the engine and run it until it shuts off.
8. Start and run the engine until it does not start again.
9. Service the air cleaner; refer to Servicing the Air Cleaner (page 18).
10. Change the engine crankcase oil; refer to Changing the Engine Oil and Filter (page 19).
11. Remove and charge the battery; refer to Charging the Battery (page 24).
12. Remove the spark plug and check the condition; refer to Servicing the Spark Plug (page 21).
13. With the spark plug removed from the engine, pour 2 tablespoons of engine oil into the spark plug hole. Now use the starter to crank the engine and distribute the oil inside the cylinder. Install the spark plug(s). Do not install the wire on the spark plug(s).
14. Check and tighten all bolts, nuts, and screws. Repair or replace any part that is damaged.
15. Paint all scratched or bare metal surfaces. Paint is available from your Authorized Service Dealer.
16. Store the unit in a clean, dry garage or storage area.
17. Cover the unit to protect it and keep it clean.

Troubleshooting

Problem	Possible Cause	Corrective Action
The engine overheats.	1. The engine load is excessive. 2. The oil level in the crankcase is low. 3. The cooling fins and air passages under the engine blower housing are plugged. 4. The air cleaner is dirty. 5. Dirt, water, or stale fuel is in fuel system.	1. Reduce the ground speed. 2. Add oil to the crankcase. 3. Remove the obstruction from the cooling fins and air passages. 4. Clean or replace the air cleaner element. 5. Contact an Authorized Service Dealer
The starter does not crank.	1. The blade control switch is engaged. 2. The battery is dead. 3. The electrical connections are corroded or loose. 4. A fuse is blown. 5. A relay or switch is damaged.	1. Disengage the blade-control switch. 2. Charge the battery. Turn the ignition switch to OFF and remove the key when the machine is not in use to avoid draining the battery. 3. Check the electrical connections for good contact. 4. Replace the fuse. 5. Contact an Authorized Service Dealer.
The engine does not start, starts hard, or fails to keep running.	1. The fuel tank is empty. 2. The air cleaner is dirty. 3. The spark plug wire(s) is loose or disconnected. 4. The spark plug(s) is pitted, fouled, or the gap is incorrect. 5. There is dirt in fuel filter. 6. Dirt, water, or stale fuel is in fuel system. 7. There is incorrect fuel in the fuel tank. 8. The oil level in the crankcase is low.	1. Fill the fuel tank. 2. Clean or replace the air cleaner element. 3. Install the wire(s) on the spark plug. 4. Install a new, correctly gapped spark plug(s). 5. Replace the fuel filter. 6. Contact an Authorized Service Dealer. 7. Drain the tank and replace the fuel with the proper type. 8. Add oil to the crankcase.
The engine loses power.	1. The engine load is excessive. 2. The air cleaner is dirty. 3. The oil level in the crankcase is low. 4. The cooling fins and air passages under the engine blower housing are plugged. 5. The spark plug(s) is pitted, fouled, or the gap is incorrect. 6. The fuel tank vent is blocked. 7. There is dirt in the fuel filter. 8. Dirt, water, or stale fuel is in the fuel system. 9. There is incorrect fuel in the fuel tank.	1. Reduce ground speed. 2. Clean the air cleaner element. 3. Add oil to the crankcase. 4. Remove the obstruction from the cooling fins and air passages. 5. Install a new, correctly gapped spark plug(s). 6. Contact an Authorized Service Dealer. 7. Replace the fuel filter. 8. Contact an Authorized Service Dealer. 9. Drain the tank and replace the fuel with the proper type.
There is abnormal vibration.	1. The engine mounting bolts are loose. 2. The engine pulley, idler pulley, or blade pulley is loose. 3. The engine pulley is damaged. 4. The cutting blade(s) is/are bent or unbalanced. 5. A blade mounting bolt is loose. 6. A blade spindle is bent.	1. Tighten the engine mounting bolts. 2. Tighten the appropriate pulley. 3. Contact an Authorized Service Dealer. 4. Install a new cutting blade(s). 5. Tighten the blade mounting bolt. 6. Contact an Authorized Service Dealer.

Problem	Possible Cause	Corrective Action
The cutting height is uneven.	1. The blade(s) is not sharp. 2. The cutting blade is bent. 3. The underside of the mower is dirty. 4. A blade spindle is bent.	1. Sharpen the blade(s). 2. Install a new cutting blade. 3. Clean the underside of the mower. 4. Contact an Authorized Service Dealer.
The blade does not rotate.	1. The mower belt is off the pulley. 2. The blade-control clutch is faulty. 3. The mower belt is worn, loose, or broken.	1. Install the mower belt. 2. Contact an Authorized Service Dealer. 3. Install a new mower belt.
The brush cutter does not move when the traction drive is engaged.	1. The transmission belt is off the pulleys. 2. The transmission belt is worn, loose, or broken. 3. The transmission bypass is engaged. 4. The parking brake is engaged. 5. The shaft key that drives the wheel is missing or sheared at one or both wheels. 6. The transmission is faulty.	1. Install the transmission belt. 2. Replace the transmission belt. 3. Disengage the transmission bypass. 4. Disengage the parking brake. 5. Replace the shaft key. 6. Contact your Authorized Service Dealer.
The cutting performance is poor.	1. The forward traction speed is too fast. 2. The blade is dull. 3. The underside of the mower deck is clogged with debris.	1. Reduce the forward speed. 2. Sharpen or replace the blade. 3. Clean the debris from beneath the deck.

Notes:

Notes:

European Privacy Notice

The Information Toro Collects
Toro Warranty Company (Toro) respects your privacy. In order to process your warranty claim and contact you in the event of a product recall, we ask you to share certain personal information with us, either directly or through your local Toro company or dealer.

The Toro warranty system is hosted on servers located within the United States where privacy law may not provide the same protection as applies in your country.

BY SHARING YOUR PERSONAL INFORMATION WITH US, YOU ARE CONSENTING TO THE PROCESSING OF YOUR PERSONAL INFORMATION AS DESCRIBED IN THIS PRIVACY NOTICE.

The Way Toro Uses Information
Toro may use your personal information to process warranty claims, to contact you in the event of a product recall and for any other purpose which we tell you about. Toro may share your information with Toro's affiliates, dealers or other business partners in connection with any of these activities. We will not sell your personal information to any other company. We reserve the right to disclose personal information in order to comply with applicable laws and with requests by the appropriate authorities, to operate our systems properly or for our own protection or that of other users.

Retention of your Personal Information
We will keep your personal information as long as we need it for the purposes for which it was originally collected or for other legitimate purposes (such as regulatory compliance), or as required by applicable law.

Toro's Commitment to Security of Your Personal Information
We take reasonable precautions in order to protect the security of your personal information. We also take steps to maintain the accuracy and current status of personal information.

Access and Correction of your Personal Information
If you would like to review or correct your personal information, please contact us by email at legal@toro.com.

Australian Consumer Law

Australian customers will find details relating to the Australian Consumer Law either inside the box or at your local Toro Dealer.

The Toro Warranty

A limited warranty (see warranty periods below)

Conditions and Products Covered

The Toro Company and its affiliate, Toro Warranty Company, pursuant to an agreement between them, jointly warrant your Toro Products listed below to be free from defects in materials or workmanship.

This warranty covers the cost of parts and labor, but you must pay transportation costs.

The following time periods apply from the original date of purchase:

Products	Warranty Period
Walk-Behind Aerator	1 year
• Engine[1]	2 years
Stand-On Aerator	1 year
• Battery	90 days Parts and Labor 1 year Parts Only
• Engine[1]	2 years
Dethatcher	1 year
• Engine[1]	2 years
Turf Seeder	1 year
• Engine[1]	Honda – 2 years
• Engine[1]	Subaru – 5 years
Stand-On Spreader Sprayer	1 year
• Battery	90 days Parts and Labor 1 year Parts Only
• Engine[1]	5 years
Walk-Behind Rotary Broom	1 year
• Engine[1]	2 years
Brush Cutter	1 year
• Engine[1]	2 years

Where a warrantable condition exists, we will repair the Product at no cost to you including diagnosis, labor, and parts.

[1] Some engines used on Toro Products are warranted by the engine manufacturer.

Instructions for Obtaining Warranty Service

If you think that your Toro Product contains a defect in materials or workmanship, follow this procedure**:

1. Contact any Authorized Servicing Outlet to arrange service at their dealership. To locate one convenient to you, access our website at www.Toro.com. Select “Where to Buy” and select “Contractor” under product type. You may also call our toll free number below.
2. Bring the product and your proof of purchase (sales receipt) to them.
3. If for any reason you are dissatisfied with the Service Outlet’s analysis or with the assistance provided, contact us at:

   Toro Warranty Company
   8111 Lyndale Avenue South
   Bloomington, MN 55420-1196
   Toll Free: 888-384-9939

**Toro Authorized Rental Customers who have purchased products directly from Toro and have signed the Toro Rental Customer Agreement have the ability to perform their own warranty work. Please visit Toro’s Rental Portal for electronic warranty clam filing procedures or call the toll free number above.

Owner Responsibilities

You must maintain your Toro Product by following the maintenance procedures described in the *Operator’s Manual*. Such routine maintenance, whether performed by a dealer or by you, is at your expense. Parts scheduled for replacement as required maintenance (“Maintenance Parts”), are warranted for the period of time up to the scheduled replacement time for that part. Failure to perform required maintenance and adjustments can be grounds for disallowing a warranty claim.

Items and Conditions Not Covered

Not all product failures or malfunctions that occur during the warranty period are defects in materials or workmanship. This express warranty does not cover the following:

- Product failures which result from installation and use of add-on, modified, or unapproved accessories
- Failure to perform required maintenance and/or adjustments
- Repairs necessary due to failure to follow recommended fuel procedure (consult *Operator's Manual* for more details)
  - Removing contaminants from the fuel system is not covered
  - Use of old fuel (more than one month old) or fuel which contains more than 10% ethanol or more that 15% MTBE
  - Failure to drain the fuel system prior to any period of non-use over one month
- Product failures which result from operating the product in an abusive, negligent, or reckless manner
- Parts subject to consumption through use unless found to be defective. Examples of parts which are consumed, include, belts, cutters, clutches, blades, teeth, spark plugs, tires, filters, etc.
- Failures caused by outside influence include, weather, storage, contamination, lubricants, additives, or chemicals, etc.
- Normal “wear and tear” items incudes painted surfaces and scratched decals, etc.
- Any component covered by a separate manufacturer’s warranty
- Pickup and delivery charges

General Conditions

Repair by an Authorized Servicing Outlet or Self-Service as an Authorized Rental Customer is your sole remedy under the warranty.

Neither The Toro Company nor Toro Warranty Company is liable for indirect, incidental or consequential damages in connection with the use of the Toro Products covered by this warranty, including any cost or expense of providing substitute equipment or service during reasonable periods of malfunction or non-use pending completion of repairs under this warranty. All implied warranties of merchantability and fitness for use are limited to the duration of this express warranty. Some states do not allow exclusions of incidental or consequential damages, or limitations on how long an implied warranty lasts, so the above exclusions and limitations may not apply to you.

This warranty gives you specific legal rights, and you may also have other rights which vary from state to state.

Except for the engine warranty coverage and the Emissions warranty referenced below, if applicable, there is no other express warranty. The Emissions Control System on your Product may be covered by a separate warranty meeting requirements established by the U.S. Environmental Protection Agency (EPA) or the California Air Resources Board (CARB). Refer to the California Emission Control Warranty Statement supplied with your Product or contained in the engine manufacturer’s documentation for details.

Countries Other than the United States or Canada

Customers who have purchased Toro products outside the United States or Canada should contact their Toro Distributor (Dealer) to obtain guarantee policies for your country, province, or state. If for any reason you are dissatisfied with your Distributor's service or have difficulty obtaining guarantee information, contact the Toro importer. If all other remedies fail, you may contact us at Toro Warranty Company.

Australian Consumer Law: Australian customers will find details relating to the Australian Consumer Law either inside the box or at your local Toro Dealer.