FORM NO. 3317-429 UK

TORO®

MODEL NO. 03410, 03420, 03425, 03430
03434, 03435, 03436, 03437, 03438, 03439
03454, 03455, 03456—50001 & UP

**OPERATOR'S MANUAL**

# REELMASTER® 216, 216-D & CUTTING UNITS

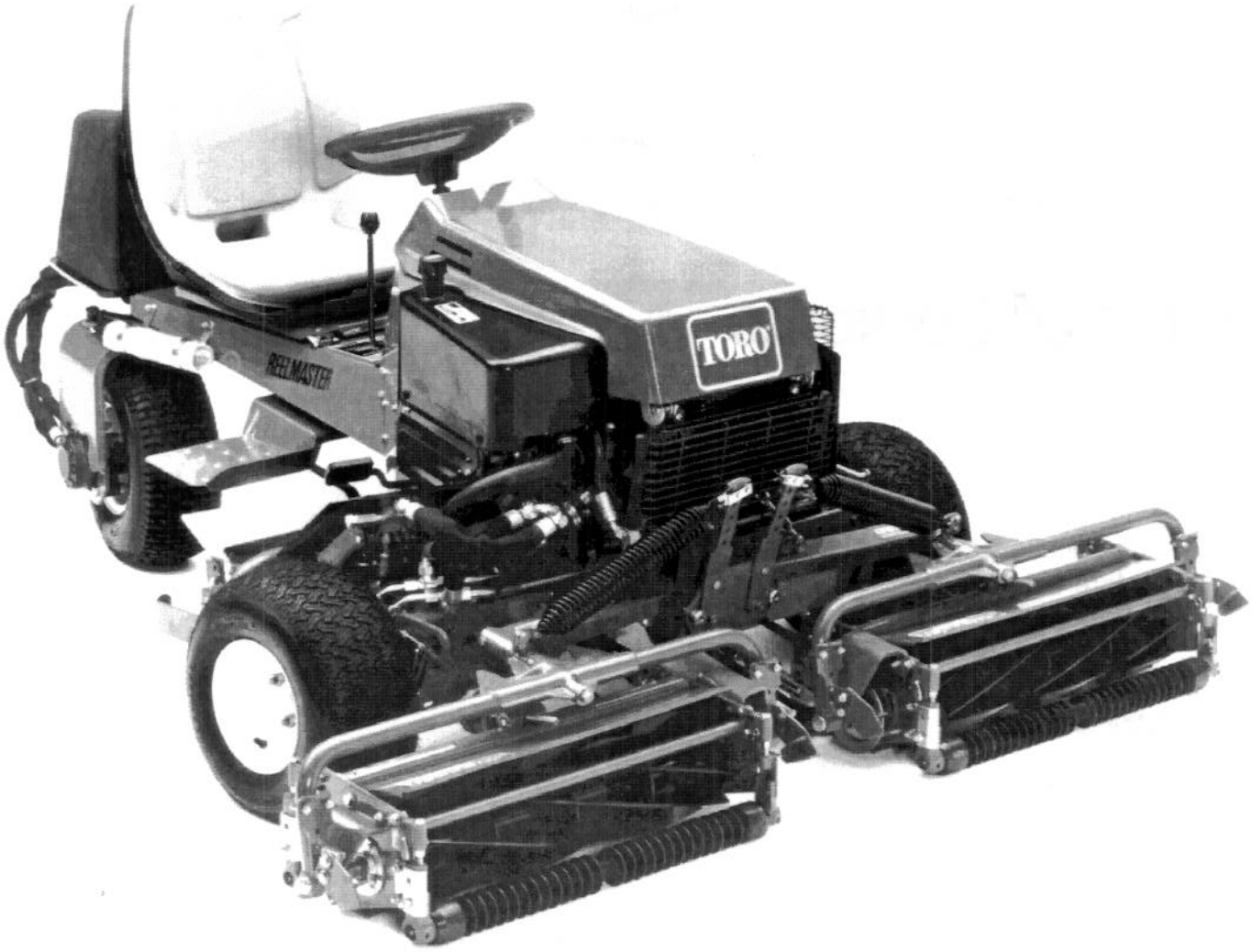


© The Toro Company—1995

This operator's manual has instructions on safety, operation, and maintenance.

This manual emphasizes safety, mechanical and general product information. DANGER, WARNING and CAUTION identify safety messages. Whenever the triangular safety alert symbol appears, understand the safety message that follows. "IMPORTANT" highlights special mechanical information and "NOTE" emphasizes general product information worthy of special attention.

## IDENTIFICATION AND ORDERING

### MODEL AND SERIAL NUMBER

The model and serial number for the traction unit is on a plate that is mounted on the left front frame member. The model and serial number for the cutting unit is on a plate that is mounted on the top front of the center cutting unit. Use model and serial number in all correspondence and when ordering parts.

To order replacement parts from an authorized TORO Distributor, supply the following information:

1. Model and serial numbers of the machine.

2. Part number, description and quantity of parts desired.

**NOTE:** Do not order by reference number if a parts catalog is being used; use the part number.

# Table of Contents


| | Page |
|---|---|
| Safety | 3 |
| Specifications | 9 |
| Before Operating | 10 |
| Controls | 13 |
| First-Time Operation | 16 |
| Operating | 20 |
| Maintenance | 23 |

# Safety

## Training

1. Read the instructions carefully. Be familiar with the controls and the proper use of the equipment.

2. Never allow children or people unfamiliar with these instructions to use the lawn mower. Local regulations may restrict the age of the operator.

3. Never mow while people, especially children, or pets are nearby.

4. Keep in mind that the operator or user is responsible for accidents or hazards occurring to other people or their property.

5. Do not carry passengers.

6. All drivers should seek and obtain professional and practical instruction. Such instruction should emphasize:

    - the need for care and concentration when working with ride-on machines;
    - control of a ride-on machine sliding on a slope will not be regained by the application of the brake. The main reasons for loss of control are:
        - insufficient wheel grip;
        - being driven too fast;
        - inadequate braking;
        - the type of machine is unsuitable for its task;
        - lack of awareness of the effects of ground conditions, especially slopes;
        - incorrect hitching and load distribution.

## Preparation

1. While mowing, always wear substantial footwear and long trousers. Do not operate the equipment when barefoot or wearing open sandals.

2. Thoroughly inspect the area where the equipment is to be used and remove all objects which may be thrown by the machine.

3. **WARNING—Petrol is highly flammable.**

    - Store fuel in containers specifically designed for this purpose.
    - Refuel outdoors only and do not smoke while refueling.
    - Add fuel before starting the engine. Never remove the cap of the fuel tank or add petrol while the engine is running or when the engine is hot.
    - If petrol is spilled, do not attempt to start the engine but move the machine away from the are of spillage and avoid creating any source of ignition until petrol vapors have dissipated.
    - Replace all fuel tanks and container caps securely.

4. Replace faulty silencers.

## Operation

1. Do not operate the engine in a confined space where dangerous carbon monoxide fumes can collect.

2. Mow only in daylight or in good artificial light.

3. Before attempting to start the engine, disengage all blade attachment clutches and shift into neutral.

4. Do not use on slopes of more than:

    - Never mow side hills over 5°
    - Never mow uphill over 10°
    - Never mow downhill over 15°

5. Remember there is no such thing as a "safe" slope. Travel on grass slopes requires particular care. To guard against overturning:

- do not stop or start suddenly when going up or downhill;
- engage the clutch slowly, and always keep the machine in gear, especially when travailing downhill;
- machine speeds should be kept low on slopes and during tight turns;
- stay alert for bumps and hollows and other hidden hazards;
- never mow across the face of the slope, unless the lawn mower is designed for this purpose.

**6.** Use care when pulling loads or using heavy equipment.

- Use only approved drawbar hitch points.
- Limit loads to those you can safely control.
- Do not turn sharply. Use care when reversing.
- Use counterweight(s) or wheel weights when suggested in the instruction handbook.

**7.** Watch out for traffic when crossing or near roadways.

**8.** Stop the blades rotating before crossing surfaces other than grass.

**9.** When using any attachments, never direct discharge of material toward bystanders nor allow anyone near the machine while in operation .

**10.** Never operate the lawn mower with defective guards, shields or without safety protective devices in place.

**11.** Do not change the engine governor settings or overspeed the engine. Operating the engine at excessive speeds may increase the hazard of personal injury.

**12.** Before leaving the operator's position:

- disengage the power take-off and lower the attachments;
- change into neutral and set the parking brake;
- stop the engine and remove the key.

**13.** Disengage the drive to attachments when transporting or not in use.

**14.** Stop the engine and disengage the drive to the attachment

- before refueling;
- before removing the grass catcher;
- before making height adjustments unless the adjustment can be made from the operator's position.
- before clearing blockages;
- before checking, cleaning or working on the lawnmower;
- after striking a foreign object. Inspect the lawnmower for damage and make repairs before restarting and operating the equipment.

**15.** Reduce the throttle setting during engine runout and, if the engine is provided with a shutoff valve, turn the fuel off at the conclusion of mowing.

## Maintenance and Storage

**1.** Keep all nuts, bolts and screws tight to be sure the equipment is in safe working condition.

**2.** Never store the equipment with petrol in the tank inside a building where fumes may reach an open flame or spark.

**3.** Allow the engine to cool before storing in any enclosure.

**4.** To reduce the fire hazard, keep the engine, silencer, battery compartment and petrol storage area free of grass, leaves, or excessive grease.

**5.** Check the grass catcher frequently for wear or deterioration.

6. Replace worn or damaged parts for safety.

7. If the fuel tank has to be drained, this should be done outdoors.

8. Be careful during adjustment of the machine to prevent entrapment of the fingers between moving blades and fixed parts of the machine.

9. On multi-bladed machines, take care as rotating one blade can cause other blades to rotate.

10. When the machine is to be parked, stored or left unattended, lower the cutting means unless a positive mechanical lock is used.

# Symbol Glossary

Safety alert symbol



Safety alert symbol



Read operator's manual



Consult technical manual for proper service procedures



Thrown or flying objects—whole body exposure



Thrown or flying objects—rotary side-mounted mower. Keep deflector shield in place.



Severing toes or foot—mower blade



Severing fingers or hand—mower blade



Rotating blade can cut off toes or fingers. Stay clear of blade as long as the engine is running.



Do not open or remove safety shields while the engine is running.



Dismemberment—Mower in rearward position.



Stay a safe distance from the machine.

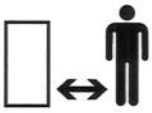

Stay a safe distance from the mower.



Keep children a safe distance from the machine.



Machine rollover—side hill




Machine rollover—up hill




Machine rollover—down hill




Machine rollover—roll over protection system



Fast



Slow



Decreasing/increasing



On/Run



Off/Stop



Engine



Engine start



Engine stop




Choke



Engine temperature



Engine lubricating oil pressure



Engine lubricating oil pressure



Fuel



Fuel level

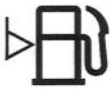

Volume empty



Volume full



Battery charging condition

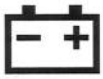

Head lights—Main/high beam



Brake system



Parking brake




Clutch



PTO (Power Take Off)



Engage

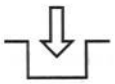

Disengage

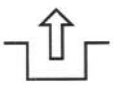

Unlock



Lock



Cutting element—basic symbol



Cutting element—height adjustment



Cutting unit—lower



Cutting unit—raised

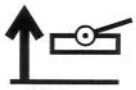

Cutting or entanglement of foot—rotating auger



Severing of fingers or hand—impeller blade



Keep a safe distance from snowthrower.



Stay a safe distance from snowthrower.



Tractors must be equipped with 45 kg rear wheel wheel weight with this attachment installed.




Machine rollover protection system snowthrower



Severing of hand—rotating knives



Severing of foot—rotating knives



Riding on this machine is allowed only on a passenger seat and only if the driver's view is not hindered.



Crushing of fingers or hands—force applied from the side



Kickback or upward motion—stored energy



Shut off engine and remove key before performing maintenance or repair work.



Machine travel direction—combined



Low — L

High — H

Reverse — R

Neutral — N

First gear — 1

Second gear — 2

Third gear up to a maximum number of forward gears. — 3

# Specifications

## Diesel Model

**216 Diesel Engine:** Perkins, 4-cycle, 3-cylinder, liquid cooled, vertical overhead valve, diesel engine with centrifugal water pump. 16.5 hp governed to a maximum speed of 3200 rpm. 37.60 cu. in. displacement. Forced lubrication gear pump. Mechanical fuel transfer pump. Fuel filter/water separator with replaceable filter element. Heavy-duty remote mounted air cleaner.

**Radiator:** Side mounted radiator, industrial construction. Cooling system capacity is 5 liters (5-1/4 quarts).

**Electrical:** 12-volt starter. Interlock switches. 14-amp alternator with remote electronic regulator rectifier.

**Fuel Capacity:** 24.6 liters (6.5 gallons.)

**Hydraulic Oil Capacity/Filter:** 8.7 liter (2.3 gallon) oil reservoir. 12.5 liter (3.3 gallon) total system capacity. 10-micron remote mounted spin on the filter.

**Ground Speed:** Infinitely variable speed selection in forward and reverse

Mowing speed: 0–8 km/h (0–5 mph)
Transport speed: 0–12.9/kmh (0–8 mph)
Reverse speed: 0–3 km/h (0–4.8 mph)

## Gasoline Model

**216 Gasoline Engine:** Kohler, 4-cycle, air cooled, 11.9 kW (16 hp) @ 3,600 rpm, 588 cc (35.9 cu. in.) displacement. Mechanical fuel pump, large capacity dual element air cleaner, 2.5 l (5-1/4 pint) oil capacity

**Steering:** Adjustable steering wheel. Pinion gear and sector gear with solid drag link to the rear steer wheel arm.

**Fuel Capacity:** 22.7 liters (6.0 gallons.)

**Electrical:** 12-volt starter. Interlock switches. 15-amp alternator with remote electronic regulator rectifier.

**Ground Speed:** Infinitely variable speed selection in forward and reverse

Mowing speed: 0–8 km/h (0–5 mph)
Transport speed: 0–10.5 kmh (0–6.5 mph)
Reverse speed: 0–4.8 km/h (0–3 mph)

## Both Models

**Traction Drive:** Hydrostatic drive; variable displacement pump, infinitely variable in both forward and reverse direction. High-torque hydraulic wheel motors.

**Brakes:** Service braking through the dynamic characteristics of the hydrostat. Parking or emergency brake is actuated by a ratchet hand lever.

**Tires/Wheels:** Two front traction tires, 18 x 8.50-8, tubeless, 4-ply rating. Rear steering tire 18 x 6.50-8, 4-ply tire with tube. Recommended tire pressure 97–138 kPa (12–16 psi).

**Frame:** The frame consists of formed steel, welded steel and steel tubing components.

Model 03420: Tricycle vehicle with 2-wheel traction drive in front and rear wheel steering.

Model 03425: Tricycle vehicle with 3-wheel traction drive and rear wheel steering.

Model 03410: Tricycle vehicle with 2-wheel traction drive in front and rear wheel steering.

Model 03430: Tricycle vehicle with 3-wheel traction drive and rear wheel steering.

**Cutting Unit Lift:** Hydraulic lift with an automatic reel shut off.

**Overall Dimensions:**

| | |
|---|---|
| Wheel tread width: | 137.2 cm (54 in.) |
| Wheel base: | 139.7 cm (55 in.) |
| Width: | 205.7 cm (81 in.) |
| Length: | 233.7 cm (92 in.) |
| Height: | 109.2 cm (43 in.) |

**Weight with 5-blade cutting unit:**

| | |
|---|---|
| Model 03420: | 449.8 kg (1,205 lb.) |
| Model 03425: | 461 kg (1,235 lb.) |

**Weight with 8-blade cutting unit:**

| | |
|---|---|
| Models 03410, 03430: | 467 kg (1,250 lb.) |

# Before Operating

**⚠ CAUTION**

Before servicing or making adjustments to the machine, stop the engine and remove the key from the switch.

## CHECK THE CRANKCASE OIL

The engine is shipped with oil in the crankcase; however, you must check the oil level before and after you first start the engine.

1. Position the machine on a level surface.

2. Remove the dipstick and wipe it with a clean rag. Push the dipstick down into the dipstick tube and make sure it is seated fully. Pull out the dipstick and check the oil level. If the level is low, add enough oil to raise the level to the FULL mark on the dipstick.

   A. Above 0° C—Use SAE 30.

   B. Below 0° C—Use SAE 5@-20 or 5W30.

**IMPORTANT Check the oil level every 5 operating hours or daily. Change the oil after every 50 hours of operation.**

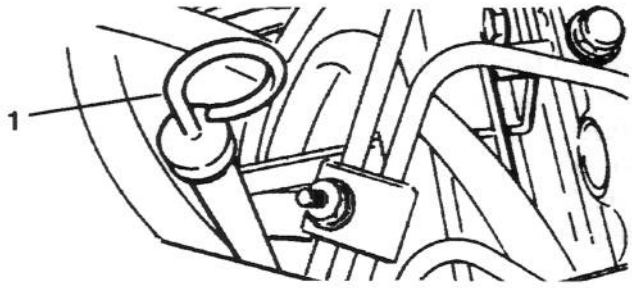


**Figure 1 Diesel Model**

1. Dipstick

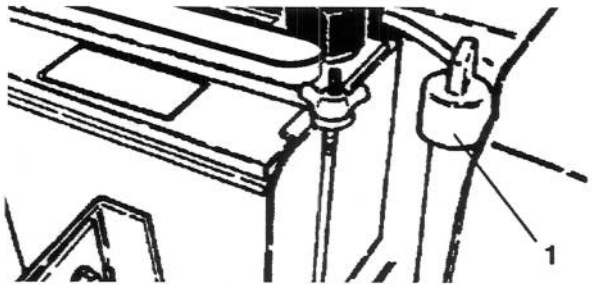


**Figure 2 Gasoline Model**

1. Oil fill cap

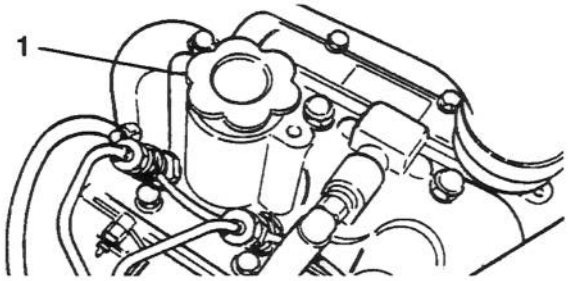


**Figure 3**

1. Oil fill cap

## FILL THE FUEL TANK

### Diesel Model:

The engine runs on No. 2 diesel fuel. Fuel tank capacity is 24.6 liters (6.5 gallons).

1. Clean the area around the fuel tank cap.

2. Remove the fuel tank cap.

3. Fill the tank to about **2.**5 cm (one inch) below the top of the tank (bottom of the filler neck). DO NOT OVERFILL. Then install the cap.

4. To prevent a fire hazard, wipe up any fuel that may have spilled .

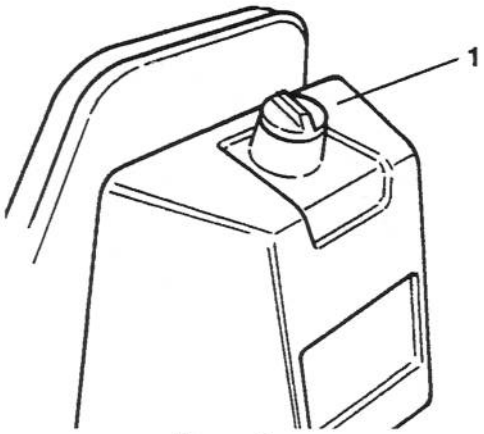


**Figure 4**

1. Fuel tank cap

**⚠ DANGER**

Because diesel fuel is flammable, use caution when storing or handling lt.

- Do not smoke while filling the fuel tank.
- Do not fill the fuel tank while the engine is running, hot, or when the machine is in an enclosed area.
- Always fill the fuel tank outside and wipe up any spilled diesel fuel before starting the engine.
- Store fuel in a clean, safety-approved container and keep the cap in place. Use diesel fuel for the engine only; not for any other purpose.

## Gasoline Model:

**THE TORO COMPANY STRONGLY RECOMMENDS THE USE OF FRESH, CLEAN, UNLEADED REGULAR GRADE GASOLINE IN TORO GASOLINE POWERED PRODUCTS. UNLEADED GASOLINE BURNS CLEANER, EXTENDS ENGINE LIFE, AND PROMOTES GOOD STARTING BY REDUCING THE BUILD-UP OF COMBUSTION CHAMBER DEPOSITS. LEADED GASOLINE CAN BE USED IF UNLEADED IS NOT AVAILABLE.**

**⚠ DANGER**

Because gasoline is flammable, use caution when storing or handling it.

- Do not fill the fuel tank while the engine is running, hot or when the machine is in an enclosed area. Vapors may build up and be ignited by a spark or flame source many feet away.
- DO NOT SMOKE while filling the fuel tank to prevent the possibility of an explosion.
- Always fill the fuel tank outside and wipe up any spilled gasoline, and fill the tank no higher than to the bottom of the filter screen. DO NOT OVERFILL.
- Store gasoline in a clean safety approved container and keep the cap on the container. Keep gasoline in a cool, well-ventilated place; never in an enclosed area such as a hot storage shed. To assure volatility, do not buy more than a 30-day supply of gasoline.
- Gasoline is a fuel for internal combustion engines; do not use it for any other purpose.
- Since children like the smell of gasoline, keep it out of their reach because the fumes are explosive and dangerous to inhale.

1. Clean the area around the fuel tank cap and remove the cap.
2. Fill the tank to about one inch below the top of the tank, (bottom of filler neck). DO NOT OVERFILL. Then install the cap.
3. Wipe up any gasoline that may have spilled to prevent a fire hazard.

# DIESEL MODELS: CHECK THE COOLING SYSTEM

Clean debris off the radiator screen, radiator and oil cooler daily (Fig. 5), or hourly if conditions are extremely dusty and dirt.

The cooling system is filled with a 50/50 solution of water and permanent ethylene glycol anti-freeze. Check the level of coolant at the beginning of each day before you start the engine. Capacity of the cooling system is 5.0 liters.

**⚠ WARNING**

If the engine has been running, pressurized hot coolant can escape when the radiator cap is removed and cause burns.

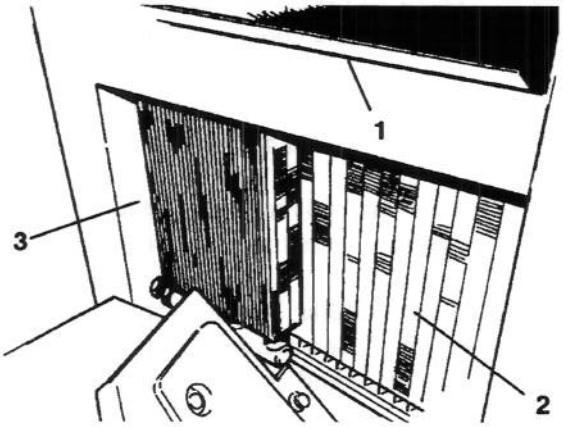


**Figure 5**

1. Radiator screen
2. Radiator
3. Oil cooler

1. Carefully remove the cap from the radiator.

2. Check the level of coolant in the radiator. The radiator should be filled to the top of the filler neck.

3. If the coolant level is low, replenish the system. DO NOT OVERFILL. If coolant is added, bleeding the system may be required; refer to Bleeding The Cooling System.

4. Install the radiator cap.

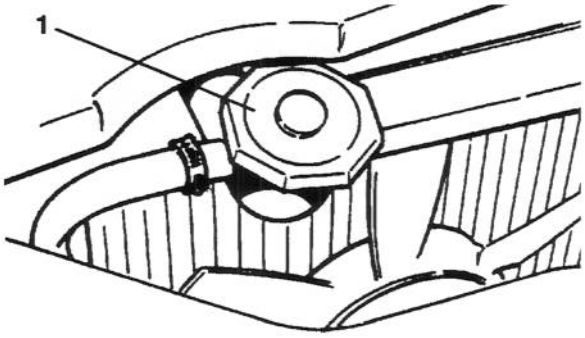


**Figure 6**

1. Radiator cap

# CHECK THE HYDRAULIC SYSTEM FLUID

The hydraulic system is designed to operate with Mobil DTE26 or equivalent anti-wear hydraulic fluid. The machine's system is filled at the factory with approximately 12.5 liters (3.3 gallons) of fluid. However, check the level of hydraulic fluid before you first start the engine and daily thereafter.

Hydraulic Oil (recommended brands): (ISO 68)

| | |
|---|---|
| Mobil | DTE26 |
| Shell | Tellus 68 |
| Amoco | Rykon Oil #68 |
| Conoco | Super Hydraulic Oil 68 |
| Exxon | Nuto 68 |
| Kendall | Kenoil R&O AW 68 |
| Pennzoil | Penreco 68 |
| Phillips | Magnus A 68 |
| Standard | Energol HLP 68 |
| Sun | Sunvis 831 WR |
| Union | Unaz AW 68 |
| Chevron | AW Hydraulic Oil 68 |

Note: All are interchangeable.

**IMPORTANT Use only the hydraulic oils specified. Other fluids could cause system damage.**

**Note:** A red dye additive for the hydraulic system oil is available in 20 ml. (2/3 oz) bottles. One bottle is sufficient for 15–23 liters (4–6 gal.) of hydraulic oil. Order Part No. 44-2500 from your authorized Toro distributor.

1. Position the machine on a level surface.

2. Make sure the machine has been operated so the oil is warm. Check the oil level oil by looking in the sight gauge. If the oil level is at the center of the gauge, it is sufficient.

3. If the oil level is not at the center of the gauge, remove the cap from the hydraulic oil reservoir and slowly fill the reservoir with Mobil DTE 26 or equivalent hydraulic oil until the level reaches the center of the sight gauge. DO NOT OVERFILL.

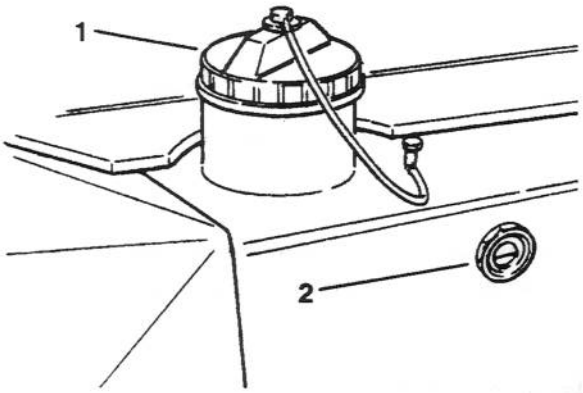


**Figure 7**
1. Hydraulic reservoir cap
2. Sight Gauge

**IMPORTANT To prevent system contamination, clean the top of the hydraulic oil containers before puncturing. Make sure the pour spout and funnel are clean.**

4. Install the reservoir cap. Wipe up any oil that may have spilled.

## DIESEL MODELS: INSPECT THE FUEL FILTER

Inspect the fuel filter bowl daily for water or other contaminants. If water or other contaminants are present, they must be removed before operation.

1. Close the fuel shut-off above the filter.

2. Unscrew the nut securing the bowl to the filter head. Remove water or other contaminants from the bowl.

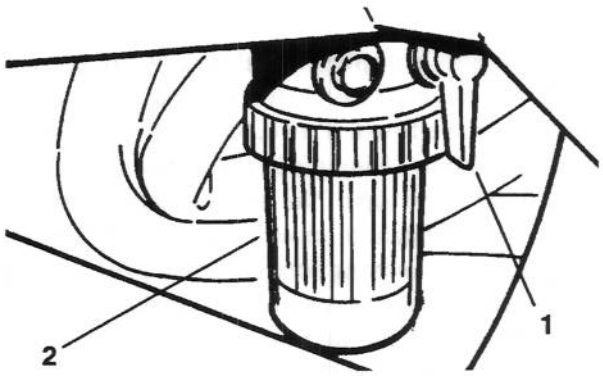


**Figure 8**
1. Fuel filter

3. Inspect the fuel filter and replace it if it is dirty.

4. Re-install the bowl to the filter head. Make sure to position the O-ring correctly between the bowl mounting nut and the filter head.

5. Open the fuel shut-off above the filter to re-fill with fuel. Close the bleed screw.

6. Open the bleed screw on the filter mounting, allowing the bowl to re-fill with fuel. Close the bleed screw.

**⚠ DANGER**

Because diesel fuel is flammable, use caution when storing or handling lt.

- Do not smoke while filling the fuel tank.
- Do not fill the fuel tank while the engine is running, hot, or when the machine is in an enclosed area.
- Always fill the fuel tank outside and wipe up any spilled diesel fuel before starting the engine.
- Store fuel in a clean, safety-approved container and keep the cap in place. Use diesel fuel for the engine only; not for any other purpose.

# Controls

**Traction and Stopping Pedal** (Fig. 9, 10, & 11)—The traction pedal has three functions: one, to make the machine move forward; two, to move it backward; and three, to stop it. Using the heel and toe of your right foot, depress the top of the pedal to move forward and bottom of the pedal to move backward or to assist in stopping when moving forward. Also, move the pedal to the neutral position to stop the machine. For your comfort, do not rest the heel of your foot on reverse when operating forward.

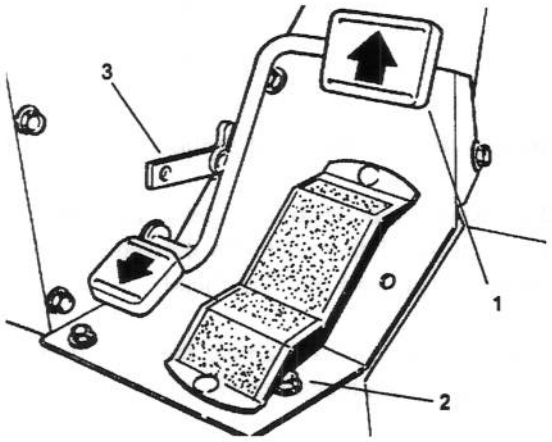


**Figure 9**

1. Traction pedal
2. Speed selector
3. Pedal stop

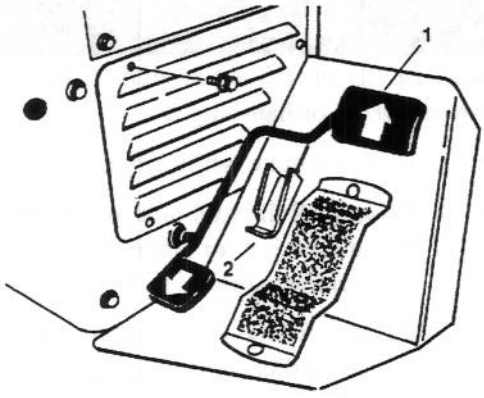


**Figure 10**

1. Traction pedal
2. Traction pedal stop (forward)

**Speed Selector (Diesel Models)** (Fig. 9)—The cam lever at the side of the traction pedal can be rotated to maintain the desired speed.

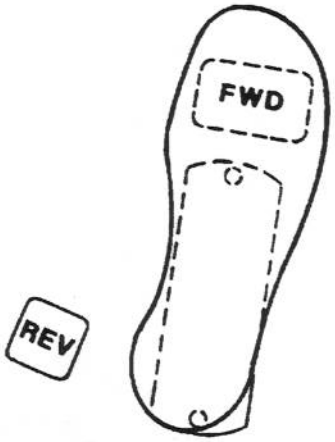


**Figure 11**

The reverse pedal stop (under the pedal) is set at the factory to provide **4.**8 kmh (3 mph) maximum speed in reverse.

**Ignition Switch**

**Diesel Models** (Fig. 12)—The ignition switch, which is used to start, stop and preheat the engine, has four positions: OFF, ON, START and GLOW PLUGS (PREHEAT).

To start the engine, turn the key counterclockwise—GLOW PLUG position—and hold it there for 20 to 30 seconds, then, turn the key clockwise to the START position to engage the starter motor. Release the key when the engine starts. The key will move automatically to ON. To shut off the engine, turn the key counterclockwise to OFF. Remove the key from the switch and install the switch cover to prevent accidental starting.

**Gasoline Models** (Fig. 13)—The ignition switch, which is used to start, stop and preheat the engine, has three positions: OFF, ON, and START.

**Throttle** (Figures 12 and 13)—The throttle is used to operate the engine at various speeds. Moving the throttle upward increases engine speed; downward decreases engine speed. The throttle controls the speed of the reel blades and, with the traction pedal, controls the machine's ground speed. Position the control in MOW

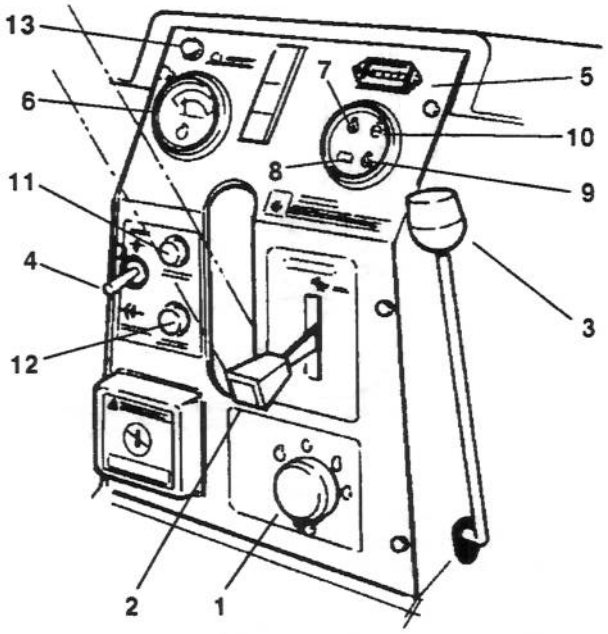


**Figure 12 (Diesel Models)**

1. Ignition switch & cover
2. Throttle
3. Cutting unit lift lever
4. Cutting unit drive switch
S. Hour meter
6. Water temperature gauge
7. Oil pressure light
8. Amp gauge
9. Glow plug indicator
10. High water temperature shut-down light
11. Engine fuse
12. Accessory fuse
13. Reel operating light

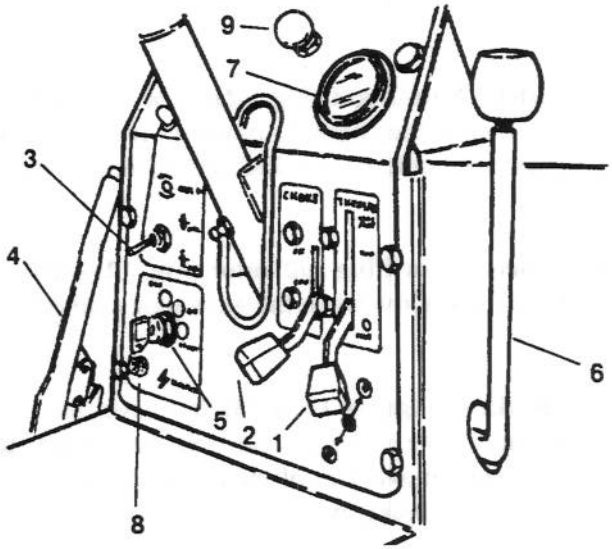


**Figure 13 (Gasoline Models)**

1. Throttle control
2. Choke control
3. Cutting unit drive switch
4. Parking brake
5. Ignition switch
6. Cutting unit left lever
7. Hour meter
8. Fuse holder
9. Hood latch
10. High water temperature shut-down light

for normal cutting. For TRANSPORT, move the control to MOW, push the control to the right, then up to FAST

**Cutting Unit Lift Lever** (Figures 12 & 13)—The lift lever has three positions: LOWER, RAISE, and NEUTRAL. To lower the cutting units to the ground, move the lift lever forward.

*When lowering the cutting units*, make sure the hydraulic cylinder is completely retracted before releasing the lift lever. The cutting units won't operate unless the cylinder is retracted.

*To raise the cutting units*, pull the lift lever rearward to the RAISE position.

**Cutting Unit Drive Switch** (Figures 12 & 13) —The switch has two positions: ENGAGE and DISENGAGE. The toggle switch engages the electromagnetic clutch to drive the cutting units. An amber light on the dash indicates when the reels are turning. Pull the switch lever out to move from disengage to engage.

**Hour Meter** (Figures 12 & 13)—Indicates the total hours of machine operation. The hour meter starts whenever the key switch is turned to "ON."

**Fuse Holders** (Fig. 12 & 13)— To replace a fuse, turn the knob counter-clockwise and remove the fuse from the case. Install the fuse, insert the knob and turn it clockwise to secure it in the panel.

**Diesel Models: Temperature Gauge (Fig. 12)**—Registers coolant temperature in the system.

**Diesel Models: Oil Pressure Light (Fig. 12)**—Glows if the engine oil pressure drops below a safe level.

**Diesel Models: Water Temperature Light (Figure 12)**—This light glows and the engine automatically

shuts-down if the engine coolant temperature gets too high.

**Diesel Models: Amp Light (Fig. 12)**—The amp light should be off when the engine is running. If it is on, the charging system should be checked and repaired as necessary.

**Diesel Models: Glow Plug Indicator (Fig. 12)**—This indicator light will glow when the glow plugs are operating.

**Parking Brake—(Figures 12 & 13)** Whenever the engine is shut off, the parking brake must be engaged to prevent accidental movement of the machine. To engage the parking brake, pull back on the lever.

**Drive Engagement Control (Fig 14)—**Models 03425 and 03430 only Located on the lower left side of the operator. Pull the knob out for 2-wheel drive; push the knob in for 3-wheel drive. The mower must come to a complete stop before shifting from 2- to 3-wheel drive.

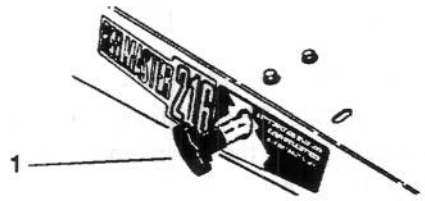


**Figure 14**
1. Deck engagement control Pull out—Two-wheel drive Push in—Three-wheel drive

**Seat Adjustments (Fig. 15)**

Fore and Aft Adjustment—Move the lever on the side of the seat outward, slide the seat to the desired position and release the lever to lock the seat into position.

**Deluxe Seat Adjustments (Fig. 15)**

*Weight Adjustment*—Push the lever up or down to adjust to the operator's weight. Lever up—light operator, lever in middle position—medium weight operator or lever down for heavy operator.

*Inclining Backrest*—Turn the handle to adjust the backrest angle. (Deluxe Seat only).

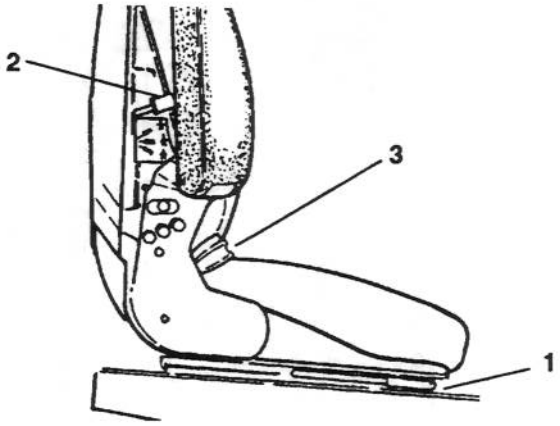


**Figure 15**
1. Fore and aft lever
2. Weight adjustment lever
3. Inclining backrest

**Fuel Shut-off Valves, Diesel Models** (Fig. 16 & 17)—Close the fuel shutoff valves under the fuel tank and on the fuel filter when storing the machine.

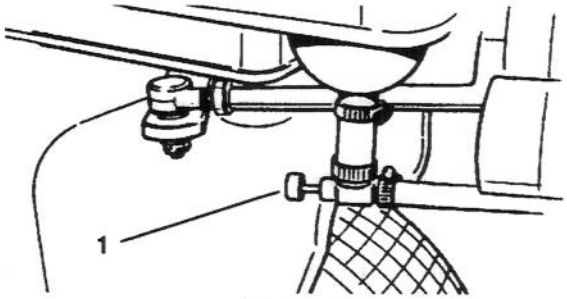


**Figure 16**
1. Fuel shut off (under the fuel tank)




**Figure 17**
1. Fuel shut off (on the fuel filter)

**Fuel Shut-off Valves, Diesel Models** (Fig. 16 & 17)—Close the fuel shutoff valves under the fuel tank and on the fuel filter when storing the machine.

# Operating Instructions

## DIESEL MODELS: STARTING/ STOPPING THE ENGINE

**IMPORTANT: The fuel system may have to be bled if any of the following situations have occurred:**

**A. Initial start up of a new engine.**

**B. The engine has ceased running due to lack of fuel.**

**C. Maintenance has been done on fuel system components; i.e., the filter replaced, etc.**

**Refer to *Bleeding The fuel System***

1. Be sure the parking brake is set and the reel drive switch is in DISENGAGE.

2. Remove your foot from the traction pedal and make sure the pedal is in the neutral position.

3. Move the throttle lever to the full throttle position.

4. Remove the cover from the ignition switch. Insert the key and turn it counterclockwise to the GLOW PLUG position—and hold it there for approximately 20 to 30 seconds. Then, turn the key clockwise to START to engage the starter motor. Release the key when the engine starts. The key will move automatically to ON.

   **IMPORTANT To prevent overheating the starter motor, do not engage the starter longer than 10 seconds. After 10 seconds of continuous cranking, wait 60 seconds before engaging the starter motor again.**

5. When starting the engine for the first time, or after an engine overhaul, operate the machine in forward and reverse for one to two minutes. Also operate the lift lever and the reel drive switch to be sure all parts operate correctly.

   Turn the steering wheel to the left and right to check steering response. Then shut the engine off and check for oil leaks, loose parts and any other noticeable malfunctions.

**⚠ CAUTION**

If the engine has been running, pressurized hot coolant can escape when the radiator cap is removed and cause burns.

6. To stop the engine, move the throttle control downward to IDLE, move the reel drive switch to DISENGAGE and turn the ignition key to OFF. Remove the key from the switch and install the switch cover to prevent accidental starting.

7. Close the fuel shut-off valves before storing the machine.

## DIESEL MODELS: BLEEDING THE FUEL SYSTEM

1. Park the machine on a level surface. Make sure the fuel tank is at least half full.

2. Unlatch and raise the hood.

3. Open the fuel shut-off valve under the fuel tank and on the fuel filter.

4. Open the (2) bleed screws on the side of the fuel filter mounting head, allowing the bowl to re-fill with fuel. Close bleed screws when the bowl is filled.

**⚠ DANGER**

Because diesel fuel is flammable, use caution when storing or handling lt.

- Do not smoke while filling the fuel tank.
- Do not fill the fuel tank while the engine is running, hot, or when the machine is in an enclosed area.
- Always fill the fuel tank outside and wipe up any spilled diesel fuel before starting the engine.
- Store fuel in a clean, safety-approved container and keep the cap in place. Use diesel fuel for the engine only; not for any other purpose.

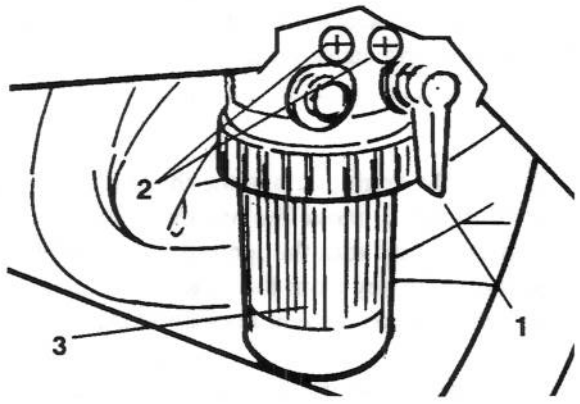


**Figure 18**

1. Fuel shutoff
2. Bleed screws (2)
3. Bowl

5. On the left side of the engine (below the alternator) find the transfer pump inlet screw. Note the angle of the fitting on the transfer pump inlet and loosen the screw (left screw only).

6. When a steady stream of fuel flows out of the transfer pump screw, tighten the screw, retaining the angle of fitting before it was loosened.

7. Loosen the injection pump inlet screw on the right side of the engine.

8. Pump the priming lever until a steady stream of fuel flows out of the injection pump inlet screw, then tighten the screw.

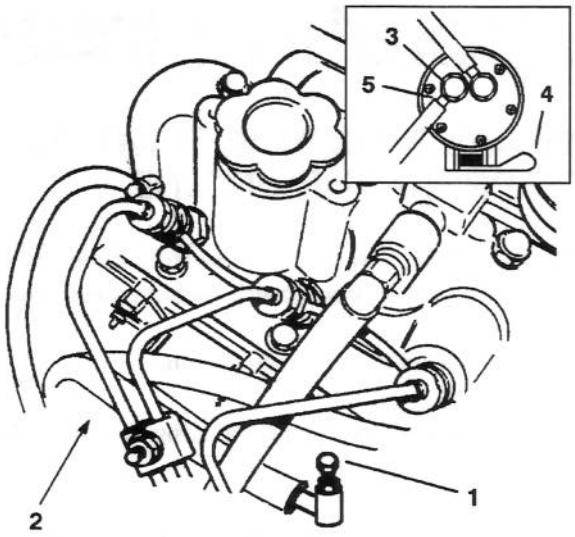


**Figure 19**

1. Transfer pump screw
2. Injection pump Inlet screw location
3. Injection pump inlet screw
4. Priming lever
5. Note fitting angle

## DIESEL MODELS: BLEEDING THE COOLING SYSTEM

If the system is being completely filled or more than a quart of coolant is being added to the system, the cooling system may need to be bled.

1. Unlatch and raise the hood.

2. Remove the radiator cap.

**⚠ CAUTION**

If the engine has been running, pressurized hot coolant can escape when the radiator cap is removed and cause burns.

3. Remove the square plug from the radiator hose.

4. Slowly fill the radiator with a 50/50 solution of water and permanent ethylene glycol anti-freeze until it comes out the plug opening in the hose.

5. Reinstall the hose plug and finish filling the radiator.

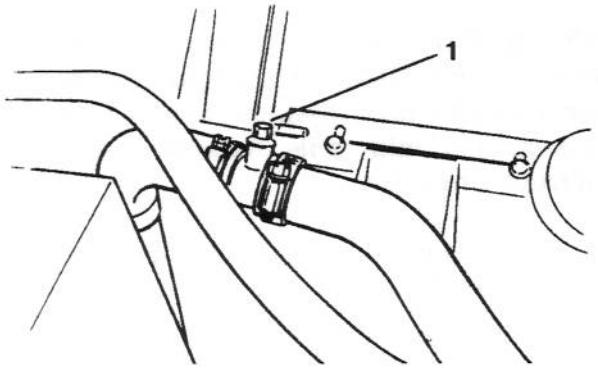


**Figure 20**

1. Hose plug

6. Install the radiator cap.

## GASOLINE MODELS: STARTING/ STOPPING THE ENGINE

1. Be sure the parking brake is set and the reel drive switch is in DISENGAGE.

   **Note:** After the hand brake is released, run the vehicle in the opposite direction of resistance to fully release the brake.

2. Remove your foot from the traction pedal and make sure the pedal is in the neutral position.

3. Move the choke lever to the ON position—when starting a cold engine—and the throttle lever to the half-throttle position.

4. Insert the key into the ignition switch and turn it clockwise to start the engine. Release the key when the engine starts. Regulate the choke to keep the engine running smoothly.

   **IMPORTANT To prevent overheating the starter motor, do not engage the starter longer than 10 seconds. After 10 seconds of continuous cranking, wait 60 seconds before engaging the starter motor again.**

5. When starting the engine for the first time, or after an engine overhaul, operate the machine in forward and reverse for one to two minutes. Also operate the lift lever and the reel drive switch to be sure all parts operate correctly.

   Turn the steering wheel to the left and right to check steering response. Then shut the engine off and check for oil leaks, loose parts and any other noticeable malfunctions.

6. To stop the engine, move the throttle control downward to IDLE, move the reel drive switch to DISENGAGE and turn the ignition key to OFF. Remove the key from the switch and install the switch cover to prevent accidental starting.

**⚠ CAUTION**

Do not disconnect the safety switches because they are for the operator's protection. Check the safety switch operation dally to be sure the system operates correctly. If a switch is not operating correctly, replace it before operating the machine. Replace the switches every two years to be sure of maximum safety.

7. Close the fuel shut-off valves before storing the machine.

## CHECK OPERATION OF INTERLOCK SWITCHES

1. With the operator off the seat, the traction pedal in neutral and the cutting unit clutch switch in disengage, the engine should start. If either the traction pedal is depressed or the cutting unit clutch switch is engaged, with the operator off the seat, the engine should stop. Correct the problem if the safety switches are not operating correctly.

2. With the operator on the seat, the engine running, and the cutting unit clutch switch engaged, the clutch should be engaged, the dash indicator light

glowing and the jackshaft turning when the lift cylinder is fully retracted. As the lift cylinder is extended, the light should go out, the clutch disengage and the jackshaft stop turning. Correct the problem if the safety switches are not operating correctly.

3. With the operator on the seat, the engine running, the clutch switch engaged, the cutting units lowered and the lift cylinder fully retracted, the reels should turn and the dash indicator light should glow. If the reels do not turn and the light does not glow, an adjustment to the cutting unit interlock switch may be necessary.

   **A.** Stop the engine and set the parking brake.

   **B.** Make sure the cutting units are completely lowered and the lift cylinder is fully retracted.

   **C.** Locate the cutting unit interlock switch on the left side of the machine on the bottom of the hydraulic cylinder.

   **D.** Turn the screw out until the switch is activated. Check continuity when the switch is activated.

   **E.** Check operation and repeat adjustment, if necessary.

## ADJUST THE STEERING COLUMN

1. Raise the hood.

2. Remove the capscrew securing the steering column to the frame bracket.

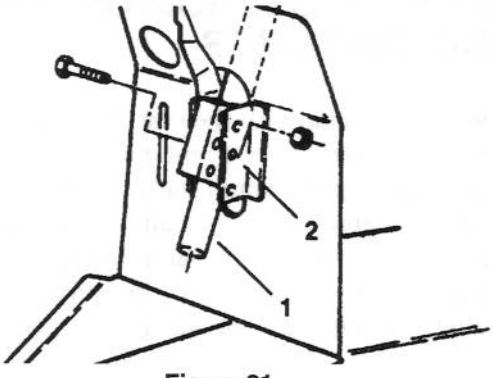


**Figure 21**

1. Steering column
2. Frame bracket

3. Adjust the steering column to the desired operating position and reinstall the capscrew.

## TOWING THE TRACTION UNIT

In case of emergency, the Reelmaster 216-D can be towed for a short distance. However, Toro does not recommend this as a standard procedure.

**IMPORTANT Do not tow the machine faster than 3–4.8 kmh (2–3 mph) because the drive system may be damaged. If the machine must be moved a considerable distance, transport it on a truck or trailer.**

1. Turn the by-pass valve on pump counterclockwise until it is fully open.

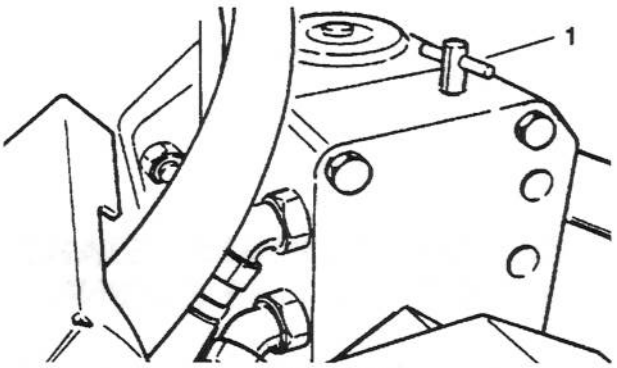


**Figure 22**

1. By-pass valve

2. Before starting the engine, close the by-pass valve securely by rotating it clockwise. Do not exceed 7–11 Nm (5–8 ft-lb) torque. Do not start the engine when the valve is open.

## TRAINING PERIOD

Before mowing with the Reelmaster, The Toro Company suggests you find a clear area and practice starting and stopping, raising and lowering the cutting units, turning, etc. This training period will help the operator gain confidence in the performance of the Reelmaster.

## BEFORE MOWING

Inspect the area for debris and clear it if necessary. Determine the direction best to mow on the previous mowing direction. Always mow in an alternate pattern from the previous mowing, so that the grass blades will be less apt to lay down and therefore be difficult to gather between the reel blades and bedknife.

## OPERATING CHARACTERISTICS

Practice operating the Reelmaster and become thoroughly familiar with it. Because of its hydrostatic transmission and choices of either two or three wheel drive, its characteristics differ from many turf maintenance machines. Points to consider when operating are the traction drive, engine speed and the load on the cutting units. Regulate the traction pedal to keep the engine rpm high and somewhat constant while mowing to maintain adequate power for the traction and cutting units. Adjust the speed selector to maintain constant ground speed and quality of cut. However, when on hilly terrain, do not use the speed selector.

Follow the operating guidelines in this manual and know how to operate the machine safely on all types of terrain. Never traverse or mow up and down on slopes over 20 degrees, nor traverse or mow side hills in excess of 15 degrees. Always plan well ahead to avoid the need for sudden stops, starts or turns. To stop, use the reverse pedal for braking. Before stopping the engine, disengage all controls, move the throttle to IDLE, and set the parking brake.

## TRANSPORT OPERATION

Be sure the cutting units are in the fully up position, move the traction pedal stop from under the pedal to allow full traction pedal travel and place the throttle control FAST. While operating on slopes and uneven terrain, always reduce speed and use extreme caution before turning to reduce risk of tipping or losing control. Watch carefully for, and avoid, holes in the terrain, sudden drop-off s and other hidden hazards. To prevent costly damage and downtime, familiarize yourself with the width of the Reelmaster. Do not attempt to pass between immovable objects placed close together.

## INSPECTION AND CLEAN-UP AFTER MOWING

After mowing, thoroughly wash the machine with a garden hose—without a nozzle so excessive water pressure will not cause contamination and damage to seals and bearings.

Make sure the radiator screen, radiator and the oil cooler(diesel models) and cooling fins and area around the engine cooling air intake (gasoline models) are kept free of dirt or grass clippings. After cleaning, it is recommended

- the machine be inspected for possible hydraulic fluid leaks, damage or wear to the hydraulic and mechanical components
- the cutting units be checked for sharpness and correct reel-to-bedknife adjustment.

## CUTTING UNIT CHARACTERISTICS

The single-knob, bedknife-to-reel adjustment system simplifies the adjustment needed to deliver optimum mowing performance. The precise adjustment that is possible gives the necessary control to provide a continual self-sharpening action—thus maintaining sharp cutting edges, assuring good quality-of-cut, and greatly reducing the need for routine backlapping.

Also, the rear roller positioning system permits optimum bedknife altitude and location for varying cutting heights and turf conditions.

## CUTTING UNIT DAILY ADJUSTMENTS

Before each day's mowing, or as required, check each cutting unit to verify correct bedknife-to-reel contact. **This must be performed even though quality of cut is acceptable.**

1. Shut off the engine and lower the cutting units onto a hard surface.

2. Release belt tension to the cutting units, refer to Releasing Belt Tension to the Cutting Units.

3. Slowly turn the reel in reverse direction, listening for reel-to-bedknife contact. If no contact is evident, turn bedknife adjusting knob clockwise, one click at a time, until light contact is felt and heard.

4. If excessive contact is felt, turn the bedknife adjusting knob counterclockwise, one click at a time until no contact is evident. Then turn the bedknife adjusting knob one click at a time clockwise, until light contact is felt and heard.

   **IMPORTANT Light contact is preferred at all times. If light contact is not maintained, bedknife/ reel edges will not sufficiently self-sharpen and dull cutting edges will result. If excessive contact is maintained, bedknife/reel wear will be accelerated, uneven wear can result, and quality of cut may be adversely affected.**

   **Note:** As the reel blades continue to run against the bedknife, a slight burr will appear on the front cutting edge surface the full length of the bedknife. If a file is occasionally run across the front edge to remove this burr, improved cutting can be obtained.

After extended running, a ridge will eventually develop at both ends of the bedknife. These notches must be rounded off or filed flush with the bedknife's cutting edge to assure smooth operation.

# MAINTENANCE

## LUBRICATION

### GREASING BEARINGS AND BUSHINGS (Fig. 23–31)

The traction unit and cutting unit's grease fittings must be lubricated regularly with No. 2 General Purpose Lithium Base Grease. If the machine is operated under normal conditions, lubricate bearings and bushings after every 25 hours of operation. Bearings and bushings must be lubricated daily when operating conditions are extremely dusty and dirty. Dusty and dirty operating conditions could cause dirt to get into the bearings and bushings, resulting in accelerated wear.

The traction unit bearings and bushings that must be lubricated are:

Steering column (Fig. 23), steering gears (2) (Under skirt below steering sector) steering shaft (2) (Fig. 24), jackshaft pulley bearing (2) (Fig. 25), lift arms (3) (Fig. 26) pivot rods (3) (Fig. 27), and belt tensioners (3) (Fig. 28).

Also, apply grease to slots in cylinder support (Fig. 29).

The cutting unit lubrication points are: Single point adjustment knob (2) (Fig. 30), reel flange bearing (2) and front and rear rollers (Fig. 31).

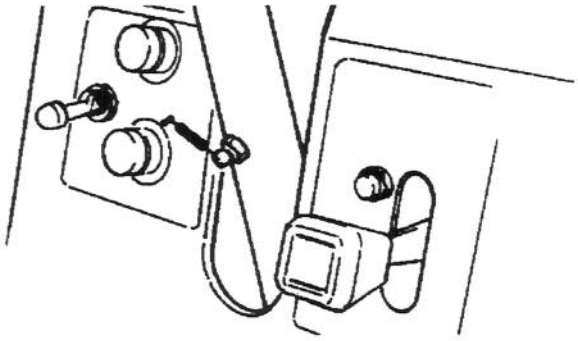

Figure 23

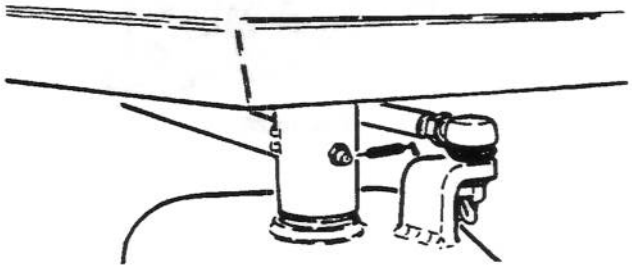

Figure 24

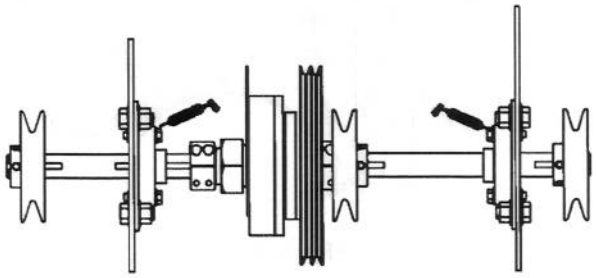

Figure 25

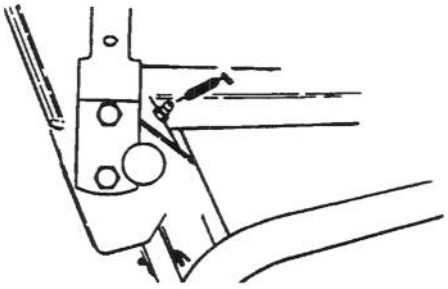

Figure 26

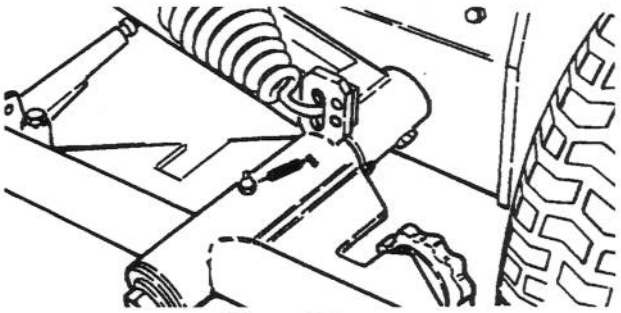

Figure 27

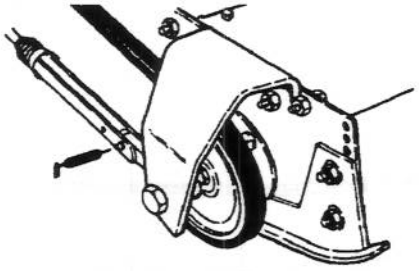

Figure 28

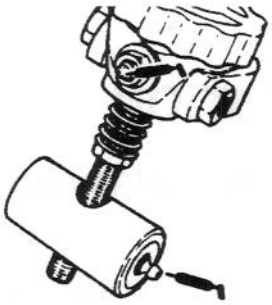

Figure 30

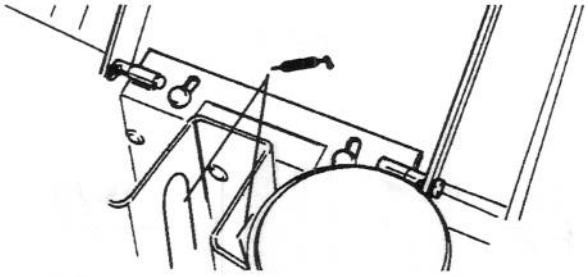

Figure 29

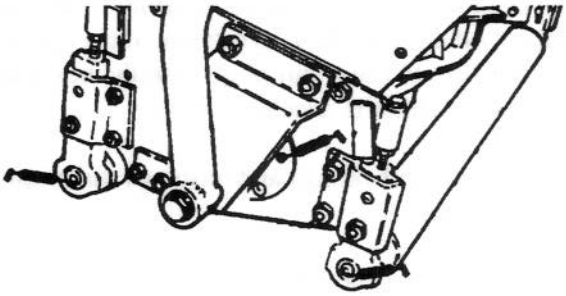

Figure 31

**⚠ CAUTION**

Before servicing or making adjustments to the machine, stop the engine and remove the key from the switch.

# DIESEL MODELS: SERVICING THE AIR CLEANER DUST CUP, BAFFLE, AND FILTER

Inspect the dust cup and rubber baffle once a week or every 50 hours operation. However, daily or more frequent inspection is required when operating conditions are extremely dusty and dirty. Never allow dust to build up closer than one inch from the rubber baffle.

1. Loosen the thumb screw until the dust cup is removed. Separate the dust cup and baffle.

2. Dump the dust out of the dust cup. After cleaning the cup and baffle, assemble and reinstall both parts.

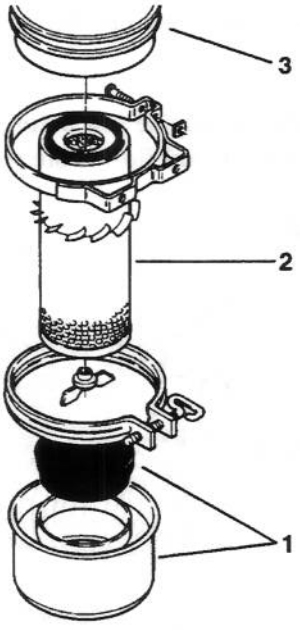


**Figure 32**

1. Dust Cup & Baffle
2. Filter Element
3. Air Cleaner Body

## FILTER

Service the air cleaner filter every 400 hours, or more frequently in extremely dusty or dirty conditions, by washing or using compressed air. Replace the element after every four cleanings (1,600 hour) or annually, whichever comes first.

### Washing Method

**IMPORTANT: Do not remove the plastic fin assembly because washing removes dust from beneath the fins.**

1. Prepare a solution of filter cleaner and water and soak the filter element about 15 minutes.

2. After soaking the filter for 15 minutes, rinse it with clear water.

3. Dry the filter element using warm, flowing air no hotter than 71° C, or allow the element to air dry. Do not use compressed air or a light bulb to dry the filter element because they may damage it.

### Compressed Air Method

**IMPORTANT: Do not remove the plastic fin assembly because this method removes dust from beneath the fins.**

1. Blow compressed air from inside to the the outside of the dry filter element. Do not exceed 689 kPa (100 psi) to prevent damage to the filter.

2. Keep the air hose nozzle at least 3 cm from the pleated paper, and move the nozzle up and down while rotating the filter element.

# GASOLINE MODELS: SERVICING THE AIR CLEANER

The foam pre-cleaner must be cleaned and reoiled after every 25 hours of engine operation if the engine is operated in clean air conditions. However, the air cleaner must be cleaned every few hours if operating conditions are extremely dusty or sandy.

1. Remove the lock nut and cover.

2. Remove the foam pre-cleaner by sliding it off the paper element.

3. Wash the pre-cleaner in detergent and warm water. Then wrap it in a cloth and squeeze it dry. Do not wring it. Next, saturate the precleaner in engine oil and squeeze it to remove excess oil.

4. Install the cleaned pre-filter on the paper cartridge.

Inspect the paper element every 50 hours of operation and replace it when it is dirty or damaged. Do not wash the paper element or clean it with compressed air.

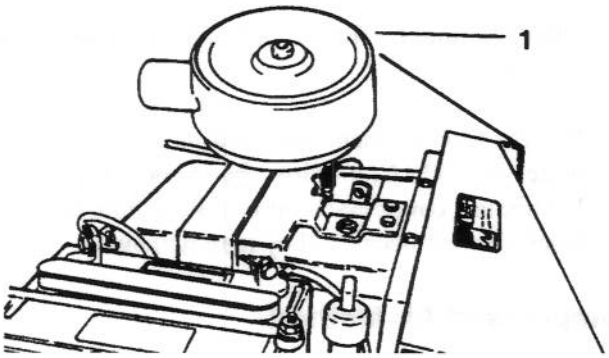


**Figure 33**

1. Air cleaner cover

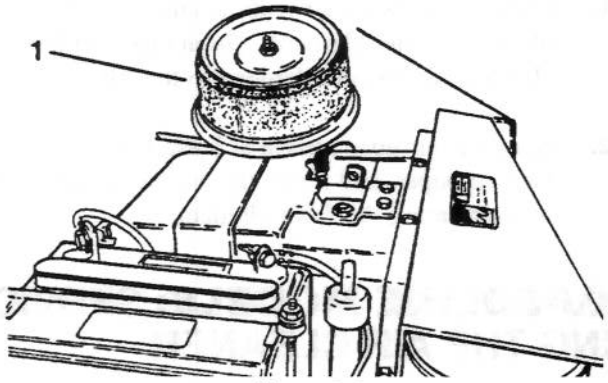


**Figure 34**

1. Foam pre-cleaner

# CHANGING ENGINE OIL AND THE OIL FILTER

## Diesel models:

Change the oil and the oil filter initially after the first 20 hours of operation, thereafter change the oil every 50 hours and the oil filter every 100 hours.

1. Locate the engine the oil drain plug on bottom, rear of the oil pan. Remove the drain plug and let the oil flow into the drain pan. When the oil stops, install the drain plug.

2. Locate the engine filter on the rear of the engine. Remove the oil filter. Apply a light coat of clean oil to the new filter seal before screwing it on. DO NOT OVER-TIGHTEN.

3. Add oil to the crankcase.

## Gasoline models:

For new engines, change the oil after the first 5 operating hours. Thereafter, under normal conditions change the oil after every 25 hour of engine operation. Change more often if you operate the engine in dusty or dirty conditions.

If possible, run the engine just before changing the oil, which will make the oil flow more freely and carry more contaminants.

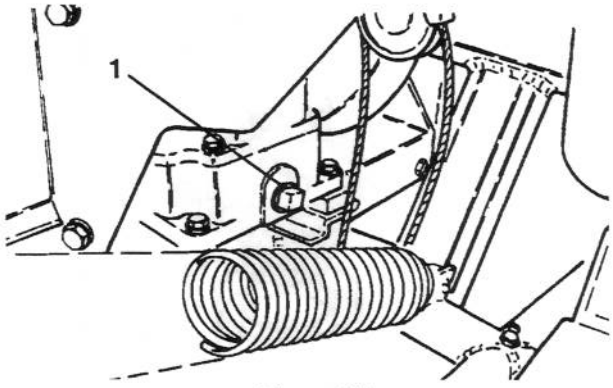


**Figure 35**

1. Crankcase drain plug (gasoline engines)

## CHANGING THE SPARK PLUG (GASOLINE ENGINES)

Check the condition of the electrodes at 100-hour intervals. The correct spark plug for the engine is Champion RH-10 or equivalent. Set the air gap at .125 in.

## CHANGING THE HYDRAULIC SYSTEM FLUID AND FILTER

The hydraulic system filter must be changed after the first five hours of operation, and after that, every 250 hours of operation or yearly, whichever comes first. Use a genuine Toro oil filter for replacement. The hydraulic fluid must be changed every 500 hours of operation or yearly, whichever comes first.

1. Park the machine on a level surface, lower the cutting units, set the parking brake and turn the engine off.

2. If only the filter is to be changed, remove the reservoir cap and insert the reservoir plug (Fig. 35), to the block outlet.

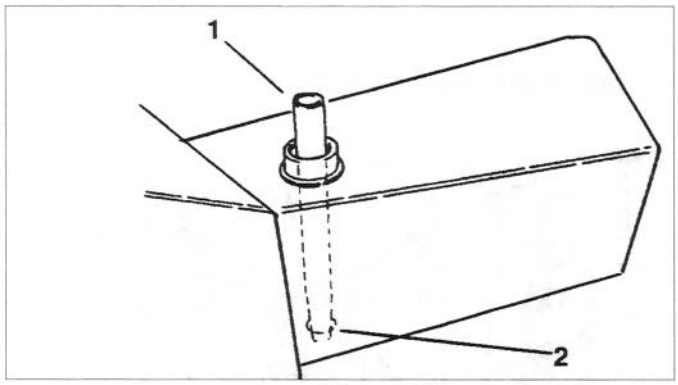


**Figure 36**

1. Reservoir plug
2. Reservoir outlet

This will retain most of the fluid in the reservoir when the filter is removed.

3. Clean the area around the hydraulic oil filter. Remove the filter from the bottom of the filter housing and allow the oil to flow into a drain pan. Use a bottom type filter wrench.

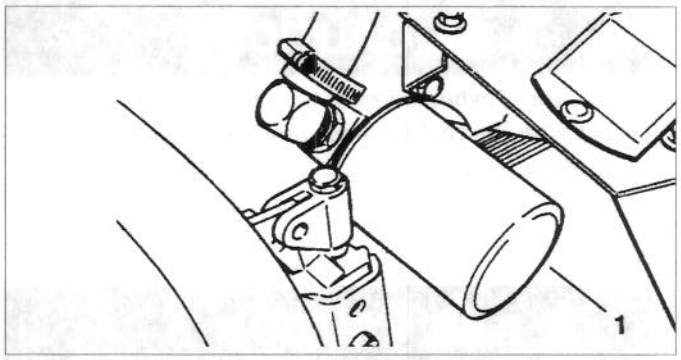


**Figure 37**

1. Hydraulic oil filter

4. Apply a film of oil on the filter gasket. Install the filter by hand until gasket contacts mounting head; then tighten the filter an additional three-fourths of a turn.

5. Fill the reservoir to the correct level.

6. Place all controls in the neutral or disengaged position and start the engine. Run the engine at the lowest possible rpm to purge the system of air.

7. Run the engine until the lift cylinder extends and retracts and forward and reverse wheel motion is achieved.

8. Stop the engine and check the oil level in the reservoir; add oil if necessary.

9. Check all connections for leaks.

## BACKLAPPING THE CUTTING UNITS

The cutting units may be backlapped on the machine. Backlap Kit, Part no. 84-5510 is available from your authorized TORO distributor.

Backlap according to the procedures in the Toro Sharpening Reel and Rotary Mowers Manual Form No. 80-300 PT.

**⚠ CAUTION**

Be careful when lapping the reel because contact with the reel or other moving parts can result in personal injury.

**⚠ CAUTION**

Under no circumstances use a short-handled paint brush. The 29-9100 handle assembly or individual parts are available from your local authorized TORO distributor.

## MODEL AND SERIAL NUMBER

The mower has two identification numbers: a model number and a serial number. The two numbers are stamped into a plate that is riveted to the frame at the rear of the mower. In any correspondence concerning the mower, supply the model and serial numbers to assure that correct information and replacement parts are obtained.

**Note:** Do not order by reference number if a parts catalog is being used; use the part number.

To order replacement parts from an Authorized TORO Service Dealer, supply the following information:

1. Model and serial numbers of the mower.
2. Part number, description and quantity of part(s) desired.

# Cutting Unit Set Up and Adjustment

## SET HEIGHT OF CUT AND LEVEL THE REAR ROLLER

### (Floating Cutting Unit)

1. Position the cutting unit on a flat level table or board.
2. Slightly loosen (crack) the nut securing each roller bracket to the angle bracket.
3. Adjust the support capscrew to achieve a 1-inch ± 1/16 inch dimension between the height-of-cut support and the front roller bracket (2 places).
4. Adjust the support capscrew to achieve 5/8 inch ± 1/16 inch dimension between the height-of-cut support and the rear roller bracket (2 places).
5. Remove the hairpin cotters securing the rear height-of-cut pins and reinstall in the 1/2-inch setting as indicated on height-of-cut plate.

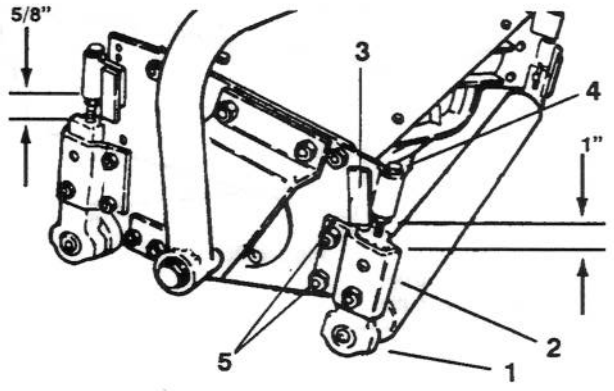


**Figure 38**

1. Roller bracket
2. Angle bracket
3. Height-of-cut pin
4. Support capscrew
5. Locknuts

6. Remove the hairpin cotters securing the front height-of-cut pins and reinstall in the 1/4-inch set-

ting as indicated on the height-of-cut plate to allow clearance between the roller and table.

7. Position a ½ inch or thicker bar under the reel blades and against the front face of the bedknife. Make sure the bar covers the full length of the reel blades.

8. Verify if the rear roller is level by inserting a piece of paper under each end of the roller.

9. Level the roller by adjusting the appropriate support capscrew on the rear roller supports until the roller is parallel and entire length of the roller contacts table.

10. When the roller is level, adjust both rollers to the desired height-of-cut pins. Tighten the nuts securing the roller brackets.

## SET HEIGHT OF CUT AND LEVEL THE REAR ROLLER

### (Fixed Cutting Units)

1. Position the cutting unit on flat level surface or board.

2. Slightly loosen (crack) the nuts securing the roller brackets to the angle brackets.

3. Adjust the support capscrews to achieve 5/8 inch ± 1/16 inch dimension between the height-of-cut support and the roller bracket (2 places).

4. Remove the hairpin cotters securing the height-of-cut pins and install them in the hole at the desired setting indicated on the height-of-cut plate.

5. Use a gauge block with a height equal to the desired height of cut and position it against the front edge of the bedknife at one end. Turn the support capscrew to adjust the height of the bedknife equal to the gauge block.

6. Repeat the procedure at the other end, then recheck the original end.

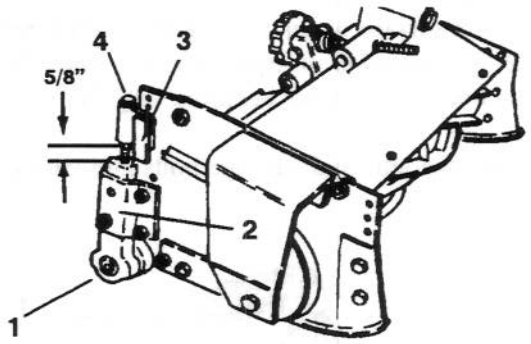


**Figure 39**

1. Roller bracket
2. Angle bracket
3. Height-of-cut pin
4. Support capscrew

7. Tighten the nuts securing the roller brackets.

8. After initial set-up, you may change the height of cut by repositioning the height-of-cut pins to the desired setting.

## ADJUST THE BEDKNIFE PARALLEL TO THE REEL

### (Floating or Fixed Cutting Units}

1. Make sure the reel contact is removed by turning the bedknife adjustment knob counterclockwise (Fig. 40). Tip the cutting unit to gain access to the reel and the bedknife (Fig. 41).

2. On either end of the reel, insert a long strip of dry newspaper between the reel and the bedknife. While slowly rotating the reel into bedknife, turn the bedknife adjusting knob clockwise one click at a time until the paper is pinched lightly, which results in a slight drag when paper is pulled.

3. Check for light contact at the other end of the reel using paper. If light contact is not evident, go to the next step

4. Loosen (2) carriage bolts on the bedbar adjuster (Fig. 42).

5. Adjust the nuts to move the bedbar adjuster up or

down until the paper is pinched along the entire bedknife surface when the bedknife adjustment knob is adjusted to no more than two clicks beyond first contact of the reel bedknife (Fig 41).

6. Tighten the nuts and carriage bolts and verify adjustment

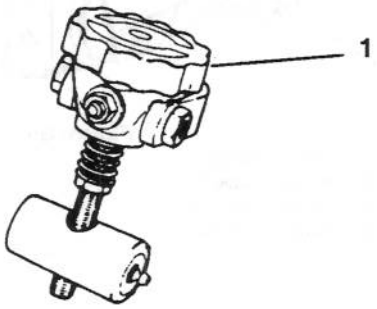


**Figure 40**

1. Bedknife adjusting screw

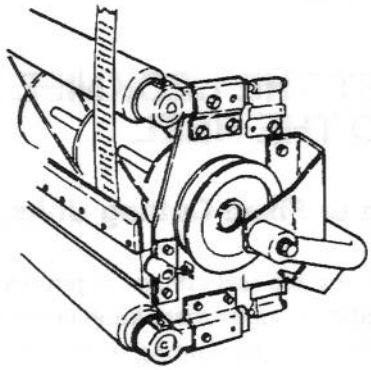

**Figure 41**

1. Roller bracket
2. Angle bracket
3. Height-of-cut pin
4. Support capscrew

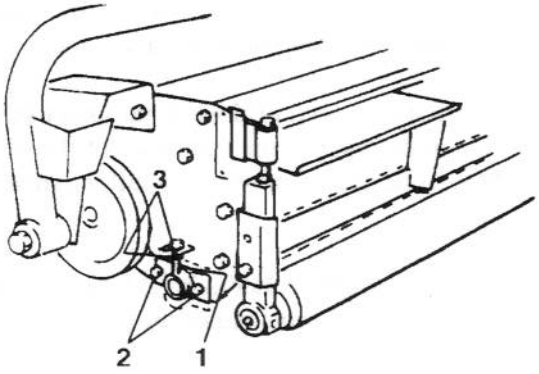


**Figure 42**

1. Bedbar adjuster
2. Carriage bolts
3. Adjustment nuts

# VERIFY HEIGHT-OF-CUT SETTING

## (Floating Cutting Unit)

1. On the gauge bar, set the head of the screw to the desired height of cut (Fig. 43) This measurement is from the bar face to the underside of the screw head. The gauge bar (Toro Part No. 138199) may be obtained from your local Toro Distributor

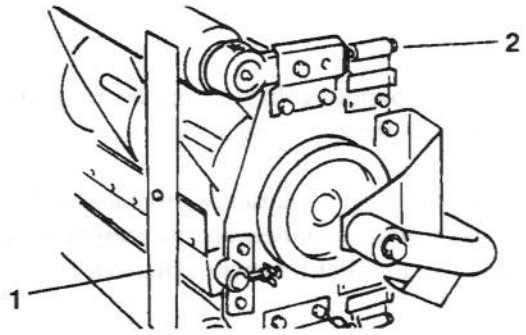


**Figure 43**

1. Gauge bar
2. Front roller support screw

2. Slightly loosen (crack) the nut securing each front roller bracket to the angle bracket.

3. Place the bar across the front and rear rollers and adjust the front roller support screws until the underside of the screw head engages the bedknife cutting edge. Do this on both ends of the reel.

4. Tighten the nuts securing the roller brackets.

# MOUNT THE CUTTING UNITS

## (Floating Cutting Unit)

1. Slide a thrust washer onto the lift arm pivot rod.

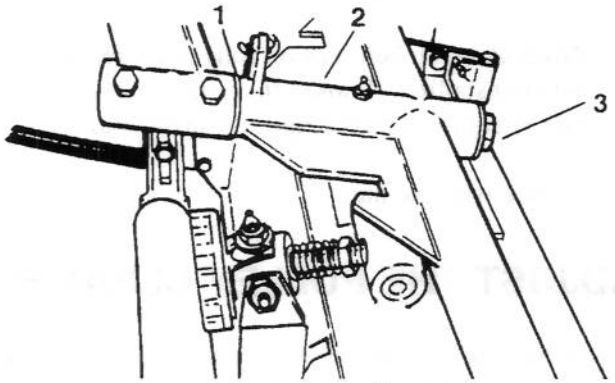


**Figure 44**

1. Thrust washer
2. Carrier frame
3. Flatwasher and flange head capscrew

2. Slide the cutting unit carrier frame onto pivot rod and secure with a flatwasher and capscrew. l

# MOUNT THE CUTTING UNITS

## (Fixed Cutting Units)

1. Slide a thrust washer onto the lift arm pivot rod (Fig 45).

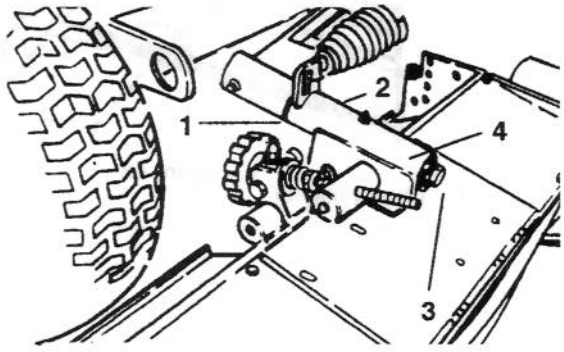


**Figure 45**

1. Thrust washer
2. Cutting unit Support
3. Flatwasher & flange head capscrew
4. Cutting unit support

2. Slide the cutting unit support onto the pivot rod and secure with a flat washer and flange head capscrew.

   Note: Position the thrust washer between the rear of the cutting unit support and flatwasher on the rear cutting unit.

   Note: When mounting the rear cutting unit, position the thrust washer between the cutting unit support and the flatwasher at the rear.

3. The front cutting units should be parallel to the front wheels. To adjust, loosen the capscrews securing the supports to the cutting units, adjusting the cutting units until they are parallel, then tighten screws.

# INSTALL THE CUTTING UNIT DRIVE BELTS

## (Floating Cutting Units)

1. Route (3) V-belts (two in loose parts) around the jackshaft pulleys and reel pulleys (Fig 46).

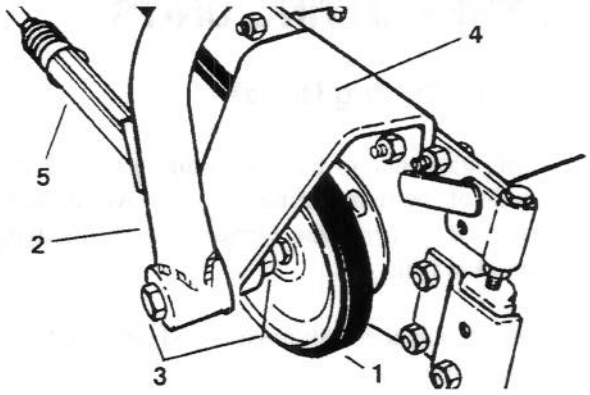


**Figure 46**

1. Cutting unit drive belt
2. Carrier frame
3. Shoulder bolt, (2) flatwashers & nut
4. Tensioner bracket
5. Belt tensioner

# INSTALL THE CUTTING UNIT DRIVE BELTS

## (Fixed Cutting Units)

1. Route (3) V-belts around the jackshaft pulleys and reel pulleys.

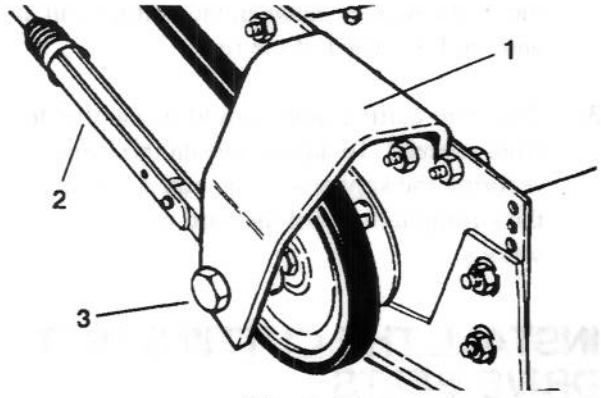


**Figure 47**

1. Tensioner bracket
2. Belt tensioner
3. Capscrew, (2) flatwashers, spacer & nut

# INSTALL THE BELT TENSIONERS TO THE CUTTING UNITS

## (Floating Cutting Units)

1. On pulley end of the front cutting units and both ends of the rear cutting unit, remove the nut from the bolt securing the carrier frame to the tensioner bracket (Fig. 46).

2. Install a spacer belt tension rod and washer onto the capscrew.

   Note: Position the belt tension rods in locked position when installing. Loosen the jam nut and rotate the rod to adjust the rod length for installation.

3. Reinstall the nut previously removed.

# INSTALL BELT TENSIONERS TO THE CUTTING UNITS

## (Fixed Cutting Units)

1. On the pulley end of the front cutting units and both ends of the rear cutting unit, install a washer, spacer, belt tension rod and spacer on a capscrew (Fig 46).

   Note: Position belt tension rods in locked position when installing. Loosen the jam nut and rotate the rod to adjust the rod length for installation.

2. Secure with the nut.

# ADJUST THE PULLEY CLEANERS

1. Adjust the cleaner bracket so it is centered in the groove of the pulley and tighten the carriage bolt and locknut.

2. Adjust the cleaner bracket so there is approximately .030–.060 clearance between the bracket and pulley, then tighten the capscrew and locknut.

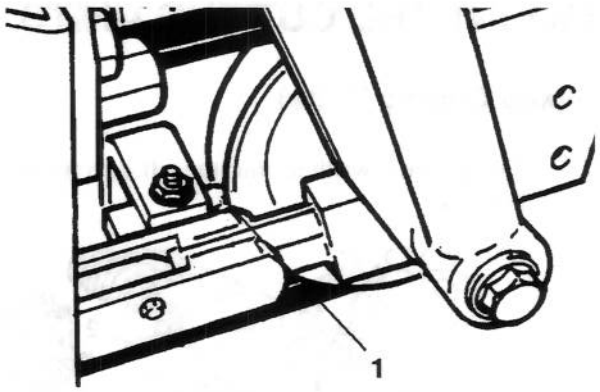


**Figure 48**

1. Cleaner bracket

# INSTALL COUNTERBALANCE SPRINGS

1. Hook one end of the spring into the second hole (from bottom) on the cutting unit lift tab (Fig. 49).

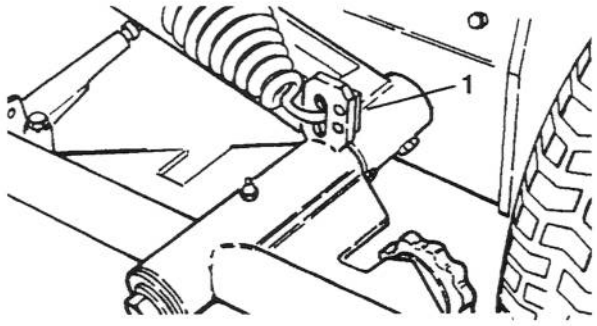


**Figure 49**

1. Cutting unit lift tab

2. On the front cutting units secure other end of the spring to the appropriate hole (see chart) on the counterbalance arm with the spring shackle, (2) clevis pins and (2) cotter pin.

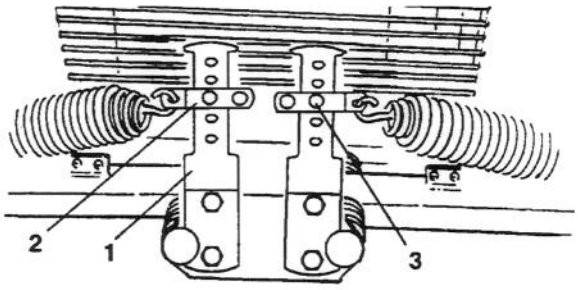


**Figure 50**

1. Counterbalance arm
2. Spring shackle
3. Clevis pin & cotter pin

**Note:** On the rear counterbalance spring, install a vinyl cover over the spring before installing.

3. On the rear cutting unit, secure the other end of the spring to the appropriate hole (see chart) in the counterbalance arm with (2) chain links (5-, 8- & 11-blade floating cutting units) or (3) chain links (5-blade fixed cutting units) spring shackle (2) clevis pins and (2) cotter pins.

   **A.** Second hole from Bottom—for 5-blade reel application

   **B.** Middle hole—for 8-blade reels without baskets

   **C.** Top hole—for 8 blade reels using baskets

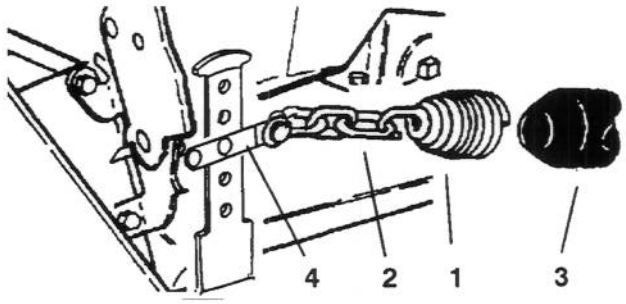


**Figure 51**

1. Rear counter balance spring
2. Chain links
3. Vinyl cover
4. Spring shackle

**IMPORTANT: These are recommended settings. Readjust the spring positions to attain optimum performance. By raising the spring locations on the counterbalance arms, the cutting unit weight on the ground is reduced and traction is increased.**

4. To tension the counterbalance springs proceed as follows:

   **A.** Remove the cotter pin and clevis pin securing the spring shackle to the counterbalance arm. Do not remove the other clevis pin.

   **B.** Move the shackle up or down on counterbalance arm until aligned with the desired hole of the arm. Reinstall the clevis pin and cotter pin.

