FORM NO. 3317-430 UK

TORO®

MODEL NO. 08881—30001 & OVER

OPERATOR'S MANUAL

SAND PRO® 5000

To assure maximum safety, optimum performance, and to gain knowledge of the product, it is essential that you or any other operator of the machine read and understand the contents of this manual before the engine is ever started. Pay particular attention to the SAFETY INSTRUCTIONS highlighted by this symbol-

The safety alert symbol means CAUTION, WARNING or DANGER—personal safety instruction. Failure to comply with the instruction may result in personal injury.

ONLY COPY
DO NOT REMOVE
Tech. Publications



FOREWORD

The SAND PRO 5000 was developed to provide an efficient, trouble free and economical method of sand trap maintenance. The latest concepts of engineering, design and safety have been incorporated into this machine, along with the highest quality parts and workmanship. Excellent service will be derived if proper operation and maintenance practices are followed.

You know, since you have purchased the industry leader in sand trap and other maintenance excellence, that future performance and dependability are of prime importance. TORO also is concerned about future use of the machine and of safety to the user. Therefore, this manual must be read by you and those involved with the SAND PRO 5000 to make sure that safety, proper set—up, operation and maintenance procedures are followed at all times.

Safety, mechanical and some general information in this manual are emphasized. DANGER, WARNING and CAUTION identify safety messages. Whenever the triangle safety symbol appears, it is followed by a safety message that must be read and understood. For more details concerning safety, read the safety instructions on pages 4 and 5. IMPORTANT identifies special mechanical information and NOTE identifies general information worthy of special attention.

If help concerning, operation, maintenance or safety is ever needed, contact your local Authorized TORO Distributor. In addition to genuine TORO replacement parts, the distributor also has optional equipment for the complete line of TORO turf care equipment. Keep your Toro all TORO. Buy genuine TORO parts and accessories.

IDENTIFICATION AND ORDERING

MODEL AND SERIAL NUMBERS

The SAND PRO 5000 has two identification numbers: a model number and a serial number. These numbers are stamped into a plate located on the left frame rail. In any correspondence concerning the unit, supply the model and serial numbers to ensure correct information and replacement parts are obtained.

Note: Do not order by reference number if a parts catalog is being used; use the part number.

To order replacement parts from an authorized TORO Distributor, supply the following information:

1. Model and serial numbers.

2. Part number, description, and quantity of parts desired.

Table of Contents

SAFETY INSTRUCTIONS	4
SYMBOL GLOSSARY	7
SPECIFICATIONS	8
BEFORE OPERATING	9
KNOW YOUR CONTROLS	12
OPERATING INSTRUCTIONS	14
MAINTENANCE	16

Safety Instructions

The SAND PRO 5000 was designed and tested to offer safe service when operated and maintained properly. Although hazard control and accident prevention partially depend up the design and configuration of the machine, these factors also depend on the awareness, concern, and proper training of the personnel involved in the operation, transport, maintenance, and storage of the machine. Improper use or maintenance of the machine can result in injury or death. To reduce the potential for injury or death, comply with the following safety instructions.

WARNING: Engine exhaust contains carbon monoxide which is an odorless, deadly poison. Do not run the engine indoors or in an enclosed area.

BEFORE OPERATING

1. Operate the machine only after reading and understanding the contents of this manual. A replacement manual is available by sending complete model and serial number to: The Toro Company, 8111 Lyndale Avenue South, Minneapolis, Minnesota 55420.

2. Never allow children to operate the machine or adults to operate it without proper instructions.

3. Become familiar with the controls and know how to stop the engine quickly.

4. Keep all shields, safety devices and decals in place. If a shield, safety device or decal is malfunctioning, illegible, or damaged, repair or replace it before operating the machine.

5. Always wear substantial shoes. Do not operate the machine while wearing sandals, tennis shoes or sneakers. Do not wear loose fitting clothing which could get caught in moving parts and cause personal injury.

6. Wearing safety glasses, safety shoes, long pants and a helmet is advisable and required by some local safety and insurance regulations.

7. Ensure traction neutral is adjusted correctly so the engine cannot be started unless the traction pedal is released and in neutral position.

8. Keep everyone, especially children and pets away from the areas of operation.

9. Since gasoline is highly flammable, handle it carefully.

   A. Use an approved gasoline container.

   B. Do not remove cap from fuel tank when the engine is hot or running.

   C. Do not smoke while handling gasoline.

   D. Fill fuel tank outdoors and to about one inch below top of tank, (bottom of filler neck). Do not overfill.

   E. Wipe up any spilled gasoline.

10. Check the safety interlock system daily for proper operation; refer to page 14. If the switch should malfunction, replace the switch before operating the machine. (After every two years, replace the interlock switch in the safety system, whether it is working properly or not.)

WHILE OPERATING

11. Exhaust fumes are hazardous and could be deadly, so do not run the engine in a confined area without adequate ventilation.

12. Sit on the seat when operating the machine. Never carry passengers.

13. When starting the engine:

    A. Make sure the traction pedal is released.

    B. After the engine is started, keep foot off the traction pedal. The machine must not move. If movement is evident, the neutral return mechanism is adjusted incorrectly; therefore, shut the engine off and
    readjust so the machine does not move when

in neutral position. If the engine does not start, check interlock switch connections.

14. Using the machine demands attention. To prevent tipping or loss of control:

    A. Use care when entering and leaving sand traps. Use extreme caution around ditches, creeks or other hazards.

    B. Watch for holes or other hidden hazards.

    C. Use caution when operating the machine on a steep slope. Reduce speed when making sharp turns or when turning on hillsides.

    D. Avoid sudden stops and starts. Do not go from reverse to full forward without first coming to a complete stop.

    E. Before backing up, look to the rear and assure no one is behind the machine.

    F. Watch out for traffic when near or crossing roads. Always yield the right of way.

15. If optional Hitch Kit, model 08833, is installed on the machine, vertical load on hitch should not exceed 200 lbs.

16. Do not touch the engine, muffler or muffler shield while the engine is running or soon after it has stopped because these areas are hot enough to cause burns.

17. If the machine ever vibrates abnormally, stop immediately, turn the engine off, wait for all motion to stop and inspect for damage. Repair all damage before commencing operation.

18. Before getting off the seat:

    A. Stop movement of the machine. Take precautions to prevent accidental starts, rolling away, etc.

    B. Shut the engine off and wait for all movement to stop.

    C. Lower attachments to the ground.

19. Whenever the machine is left unattended, be sure engine is stopped, implement is lowered and key is removed from ignition.

MAINTENANCE

20. Before servicing or making adjustments to the machine, stop the engine and pull the spark plug wire off the spark plug to prevent accidental starting of the engine.

21. Make sure all hydraulic line connectors are tight, and all hydraulic hoses and lines are in good condition before applying pressure to the system.

22. Keep body and hands away from pin hole leaks or nozzles that eject hydraulic fluid under high pressure. Use paper or cardboard, not hands, to search for leaks. Hydraulic fluid escaping under pressure can have sufficient force to penetrate skin and do serious damage. If fluid is injected into the skin it must be surgically removed within a few hours by a doctor familiar with this form of injury or gangrene may result.

23. Before disconnecting or performing any work on the hydraulic system, all pressure in system must be relieved by stopping the engine and lowering attachments to the ground.

24. To make sure the entire machine is in good condition, keep all nuts, bolts and screws properly tightened.

25. If major repairs are ever needed or assistance is required, contact an Authorized TORO Distributor.

26. To reduce potential fire hazard, keep the engine area free of excessive grease, grass, leaves and accumulation of dirt.

27. If the engine must be running to perform a maintenance adjustment, keep hands, feet, clothing, and any parts of the body away from the engine and any moving parts. Keep everyone away.

28. Do not overspeed the engine by changing governor settings. Maximum engine speed is 3200 rpm.

To assure safety and accuracy, have an Authorized Toro Distributor check maximum engine speed with a tachometer.

29. The engine must be shut off before checking oil or adding oil to the crankcase.

30. To be sure of optimum performance and safety, always purchase genuine TORO replacement parts and accessories. Replacement parts and accessories made by other manufacturers could be dangerous. Such use could void the product warranty of The Toro Company.

Symbol Glossary


SAFETY ALERT SYMBOL


GENERAL HAZARD SAFETY ALERT


STORED ENERGY HAZARD, KICKBACK OR UPWARD MOTION


HOT SURFACE, BURNS TO FINGERS OR HANDS


MACHINE TIPPING


RUNOVER/ BACKOVER


CRUSHING OF TOES OR FOOT, FORCE APPLIED FROM ABOVE


DO NOT OPEN OR REMOVE SAFETY SHIELDS WHILE ENGINE IS RUNNING


CAUSTIC LIQUIDS, CHEMICAL BURNS TO FINGERS OR HAND


STAY A SAFE DISTANCE FROM MACHINE


STAY A SAFE DISTANCE FROM MACHINE


STAY A SAFE DISTANCE FROM MACHINE


KEEP CHILDREN A SAFE DISTANCE FROM BATTERY


EXPLOSION


FIRE OR OPEN FLAME


FIRE, OPEN LIGHT & SMOKING PROHIBITED


EYE PROTECTION MUST BE WORN


CAUTION, TOXIC RISK


FIRST AID


FLUSH WITH WATER


ENGINE START



ENGINE STOP


ON/START


OFF/STOP

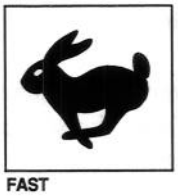
FAST

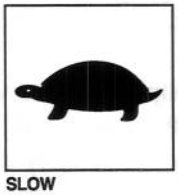
SLOW

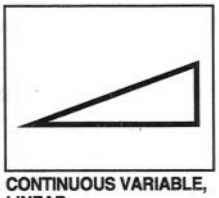
CONTINUOUS VARIABLE, LINEAR


LOCK


UNLOCK


HYDRAULIC OIL


HEADLIGHTS


CHOKE


ATTACHMENT RAISE


ATTACHMENT LOWER



PARK



FORWARD



REVERSE



NEUTRAL


CONTROL LEVER OPERATING DIRECTION, DUAL DIRECTION



TRACTION PEDAL OPERATION

DO NOT DISPOSE IN THE GARBAGE

BATTERY CHARGING CONDITION

READ OPERATOR'S MANUAL

STEERING WHEEL LOCK OPERATION

STEERING WHEEL TILT OPERATION

USE CAUTION WHEN OPERATING UNIT ON A STEEP SLOPE

DO NOT TOW

NEVER PARK UNIT ON A SLOPE. BEFORE LEAVING OPERATOR POSITION, MOVE TRACTION PEDAL TO NEUTRAL, LOWER IMPLEMENTS TO GROUND, TURN IGNITION KEY TO "OFF" POSITION & REMOVE KEY.

Specifications

Configuration: Tricycle vehicle with welded steel frame construction. Rear engine placement. All wheels powered.

Engine: Briggs & Stratton, V-twin cylinder, 4-cycle, OHV, air-cooled, gas engine with cast iron sleeves. 16 hp @ 3600 rpm, 29.3 cu. in. (480 cc) displacement, 1.75 qt. oil capacity. Electronic ignition. Full pressure lubrication, oil filter. Engine and remote-mounted air cleaners.

Gauges: Ammeter and hour meter.

Controls: Hand-operated throttle, choke and lift lever. Foot pedal controls traction forward/reverse speed.

Steering: Front wheel steering with adjustable tilt steering wheel.

Gas Tank: 5.5 gallon capacity.

Battery: 12-volt, lead acid, 32 amp hour.

Drive: Hydraulic. Coupling driven variable displacement piston pump with integral auxiliary charge pump to hydraulic motors which directly drive wheels.

Hydraulic Oil Filter: 25 micron, spin-on type.

Hydraulic Oil Reservoir: 3 gallon capacity.

Valve: Single section for raising and lowering of implement.

Cylinder: Double acting.

Tires: 22 x 11.00 - 8 two-ply pneumatic tubeless. Demountable and interchangeable. Recommended tire pressure is 4 PSI.

Speeds (at 3200 RPM): Variable between 0 and 8.5 MPH forward and 0 and 4 MPH reverse.

Seat Adjustment: 4 inches - fore and aft. Additional 1.75 inches forward adjustment available by using front mounting holes. Additional adjustment for small operator attained by removing the seat slides and base and mounting the seat directly to support.

Dimensions:

Width w/o implements: 58"
Width w/rake (Model 08812): 75"
Height: 46.25"
Length w/o implements: 70.75"
Wheelbase 42.75"
Net Weight: (Wet) 807 lb.

Optional Equipment:

Drag Mat, Model 08845
Edger, Model No. 08822
Rake, Model No. 08811
Rake Mounting Kit, Model No.08814
Tooth Rake, Model No. 08812
Weeder/Cultivator, Model No. 08815
Finish Grader, Model No. 08867
Spiker, Model No. 08856
Prong Rake Attachment, Part No.42-3960
Hitch, Part No. 20-3900
Front Blade, Model No.08821
Renovation Cultivator, Model No. 08818
Two Speed Valve Kit, Part No. 88-8500

Before Operating

⚠ CAUTION

Before servicing or making adjustments to the machine, stop the engine, pull the wires off the spark plugs and remove the key from the switch.

CHECK CRANKCASE OIL (Fig. 1)

The engine is shipped with 1-3/4 quarts (w/ filter) of oil in the crankcase; however, the oil level must be checked before and after the engine is first started.

1. Position the machine on a level surface.

2. Pivot the seat upward.

3. Unscrew the dipstick and wipe it with a clean cloth. Screw the dipstick into the tube and make sure it is seated fully. Unscrew the dipstick from the tube and check the level of oil. If the oil level is low, remove the filler cap from the valve cover (next to the dipstick) and add enough oil to raise the level to the FULL mark on the dipstick.

4. The engine uses any high-quality detergent oil having the American Petroleum Institute —API— "service classification" SE, SF or SG. Recommended viscosity (weight) is SAE 30.

5. Install the dipstick firmly in place.



Figure 1

1. Dipstick

IMPORTANT: The dipstick must be fully seated in the tube to provide proper sealing of the engine crankcase. Failure to seal the crankcase may result in engine damage.

IMPORTANT: Check the level of oil every 8 operating hours or daily. Initially, change the oil after the first 8 hours of operation; thereafter, under normal conditions, change the oil every 50 hours and the filter every 100 hours. However, change the oil more frequently when the engine is operated in extremely dusty or dirty conditions.

FILL THE FUEL TANK

⚠ DANGER

Because gasoline is flammable, caution must be used when storing or handling it. Do not fill the fuel tank while the engine is running, hot or when the machine is in an enclosed area. Vapors may build up and be ignited by a spark or flame source many feet away.

DO NOT SMOKE while filling the fuel tank to prevent the possibility of an explosion. Always fill the fuel tank outside and wipe up any spilled gasoline before starting the engine. Use a funnel or spout to prevent spilling gasoline, and fill the tank no higher than one inch below the top of the tank (bottom of the filler neck). DO NOT OVER FILL.

Store gasoline in a clean safety approved container and keep the cap on the container. Keep gasoline in a cool, well-ventilated place; never in an enclosed area such as a hot storage shed. To assure volatility, do no buy more than a 30-day supply of gasoline. Gasoline is a fuel for internal combustion engines; therefore do not use it for any other purpose. Since many children like the smell of gas, keep it out of their reach because the fumes are explosive and dangerous to inhale.

Fuel tank capacity is approximately 5.5 gallons.

THE TORO COMPANY STRONGLY RECOMMENDS THE USE OF FRESH, CLEAN, UNLEADED REGULAR GRADE GASOLINE IN TORO GASOLINE POWERED PRODUCTS. UNLEADED

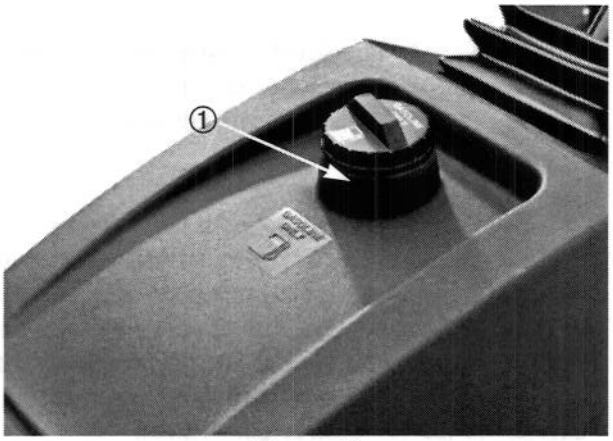

Figure 2

1. Fuel tank cap

GASOLINE BURNS CLEANER, EXTENDS ENGINE LIFE, AND PROMOTES GOOD STARTING BY REDUCING THE BUILD-UP OF COMBUSTION CHAMBER DEPOSITS. LEADED GASOLINE CAN BE USED IF UNLEADED IS NOT AVAILABLE.

NOTE: NEVER USE METHANOL, GASOLINE CONTAINING METHANOL, GASOLINE CONTAINING MORE THAN 10% ETHANOL, GASOLINE ADDITIVES, PREMIUM GASOLINE OR WHITE GAS BECAUSE ENGINE FUEL SYSTEM DAMAGE COULD RESULT.

1. Clean the area around the fuel tank cap.
2. Remove the fuel tank cap.
3. Fill the tank to about 2.5 cm below top of the tank, (bottom of the filler neck). DO NOT OVERFILL. Then install cap.
4. Wipe up any fuel that may have spilled to prevent a fire hazard.

CHECK THE HYDRAULIC SYSTEM (Fig. 3)

The hydraulic system is designed to operate on Mobil DTE 26 or equivalent anti-wear hydraulic fluid. The machine's hydraulic reservoir is filled at the factory with approximately 12 quarts of fluid. However, check the level of hydraulic fluid before the engine is first started and daily thereafter.

Hydraulic Oil (Recommended brands):

Mobil	DTE 26
Shell	Tellus 68
Amoco	Rykon Oil #68
Conoco	Super Hydraulic Oil 68
Exxon	Nuto 68
Kendall	Kenoil R&O AW 68
Pennzoil	Penreco 68
Phillips	Magnus A 68
Standard	Energol HLP 68
Sun	Sunvis 831 WR
Union	Unax AW 68
Chevron	AW Hydraulic Oil 68

Note: All are interchangeable.

IMPORTANT: Use only hydraulic oils specified. Other fluids could cause system damage.

1. Remove the cap from hydraulic oil reservoir.
2. Check the level of oil in the reservoir. The oil level should be up to the top of the cone point on the tank screen.
3. If the oil level is low, slowly fill with Mobil DTE 26 or equivalent hydraulic oil until the level is up to the top of the cone point on the tank screen. DO NOT OVERFILL.

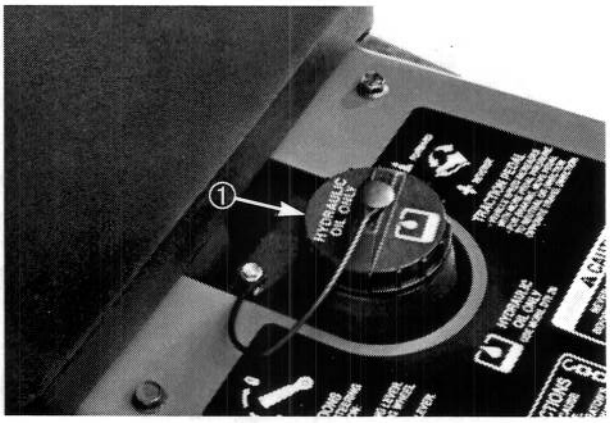

Figure 3

1. Oil reservoir cap

4. Install the reservoir cap.

IMPORTANT: To prevent system contamination, clean the tops of hydraulic oil containers before opening. Assure pour spout and funnel are clean.

CHECK TIRE PRESSURE (Fig. 4)

The tires are over-inflated at the factory for shipping purposes. Reduce the pressure to the proper levels before starting the machine.

Correct air pressure in front and rear tires is 4–6 psi.

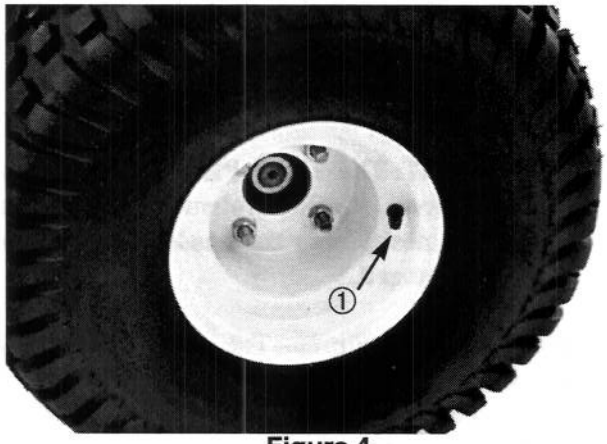

Figure 4

1. Air value

Controls

Traction and Stopping Pedal (Fig. 5–6)—The traction pedal has three functions: one, to make the machine move forward, two, to move it backward and three, to stop the machine. Using the heel and toe of the right foot, depress the top of the pedal to move forward and bottom of the pedal to move backward or to assist in stopping when moving forward. Allowing the pedal to move to the neutral position will stop the machine. **Do not rest your heel on reverse when operating forward (Fig. 6).**

Ground speed is proportionate to how far the traction pedal is depressed. For maximum ground speed, the pedal must be fully depressed while the throttle is in the FAST position. To get maximum power or when ascending a hill, have the throttle in the FAST position while depressing the pedal slightly to keep engine rpm high. When engine rpm begins to decrease, release the pedal slightly to allow rpm to increase.

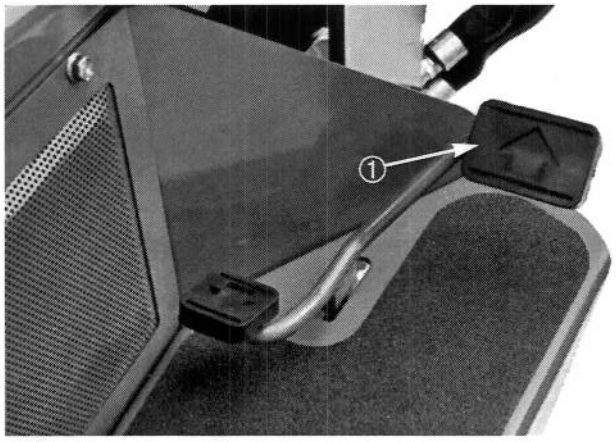

Figure 5

1. Traction & Stopping Pedal

IMPORTANT: For maximum pulling power, the throttle should be in "Fast" position, and the traction pedal just barely depressed.

⚠ CAUTION

Use the maximum ground speed ONLY when driving from one area to another. Maximum speed is not recommended when using an attached or towed implement.



Figure 6

IMPORTANT: The SAND PRO must not be operated in reverse with the implement in the down (operating) position, or the implement could be severely damaged.

Ignition Switch (Fig.7)—The ignition switch, used to start and stop the engine, has three positions: OFF, RUN and START. Turn the key clockwise—START position—to engage the starter motor. Release the key when the engine starts. The key will move automatically to the RUN position. To shut the engine off, turn the key counterclockwise to the OFF position.

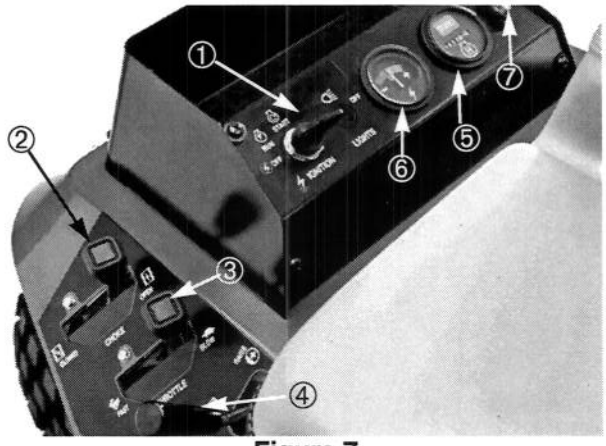

Figure 7

1. Ignition switch
2. Choke control
3. Throttle control
4. Lift lever
5. Hour meter
6. Ammeter
7. Fuse (20 amp)

Choke Control (Fig. 7)—To start a cold engine, close the carburetor choke by moving the choke control forward to the "CLOSED" position. After the engine starts, regulate the choke to keep the engine running smoothly. As soon as possible, open the choke by pulling upward to the "OPEN" position. A warm engine requires little or no choking.

Throttle Control (Fig. 7)—A lever connects to and operates the throttle linkage to carburetor. The throttle control has two positions: SLOW and FAST. Engine speed can be varied between the two settings.

Note: The engine cannot be stopped by the throttle control.

Hour Meter (Fig. 7)— Shows the total hours of machine operation. The hour meter operates whenever the key switch is turned to "ON".

Ammeter (Fig. 7)—The ammeter indicates the rate of battery charge or discharge.

Note: During normal operation, there will usually be slight ammeter needle movement to positive side.

Lift Lever (Fig.7)—To raise the implement, pull the lever up; to lower implement, push the lever down. When the desired position is attained, release the lever and it will return to neutral.

Note: The SAND PRO has a double-acting lift cylinder. Down pressure can be applied to the implement for certain operating conditions.



Figure 8

1. Steering wheel tilt lever

Steering Wheel Tilt Lever (Fig. 8)—Lever on the left side of steering column allows steering wheel to be adjusted for operator comfort.

Seat Adjusting Lever (FIg.9)—Lever on the right side of the seat allows the seat to be adjusted fore and aft for operator comfort.

Fuel Shut-Off Valve (Fig. 10)—Close the fuel shut-off valve when storing the machine.

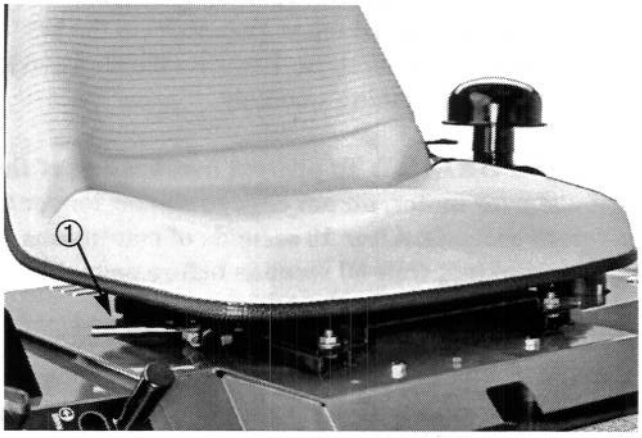

Figure 9

1. Seat adjusting lever

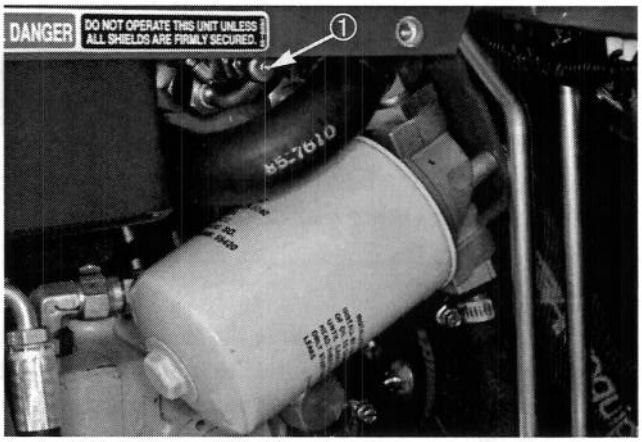

Figure 10

1. Fuel shut-off valve

Operation

STARTING/STOPPING ENGINE

1. Remove your foot from the traction pedal and make sure the pedal is in the neutral position.

2. Push the choke forward to the ON position—when starting a cold engine—and the throttle lever to the SLOW position.

3. Insert the key into the ignition switch and turn it clockwise to start the engine. Release the key when the engine starts. Regulate the choke to keep the engine running smoothly.

   IMPORTANT: To prevent overheating of the starter motor, do not engage starter longer than 10 seconds. After 10 seconds of continuous cranking, wait 60 seconds before engaging starter motor again.

4. When the engine is started for the first time, or after overhaul of the engine, operate the machine in forward and reverse for one to two minutes. Also operate the lift lever to be sure of proper operation of all parts. Shut the engine off and check for oil leaks, loose parts and any other noticeable malfunctions.

⚠ CAUTION

Shut off the engine and wait for all moving parts to stop before checking for leaks, loose parts and other malfunctions.

5. To stop the engine, move the throttle control to the SLOW position and turn the ignition key to OFF. Remove the key from switch to prevent accidental starting.

6. Close the fuel shut-off valve before storing the machine.

CHECK THE TRACTION INTER-LOCK SYSTEM

The interlock system prevent s the engine from cranking or starting unless the traction pedal is in "NEUTRAL".

⚠ CAUTION

The interlock switch is for the operator's protection, so do not disconnect it. Check operation of the switch daily to assure the interlock system is operating. If the switch is defective, re;place it before operating. Regardless of whether the switch is operating correctly, replace it every two years to assure maximum safety. Do not rely entirely on safety switches—use common sense.

1. Check interlock operation in an open area free of debris and bystanders. Stop the engine.

2. Sit on the seat. Depress the traction pedal in forward and reverse directions, while trying to start the engine. If the engine cranks,there may be a malfunction in the interlock system. Repair immediately. If the engine does not crank, the system is operating correctly.

TOWING THE SAND PRO

In case of emergency, the SAND PRO can be towed for a short distance. However, Toro does not recommend this as a standard procedure.

IMPORTANT: Do not tow the machine faster than 2-3 mph because drive system may be damaged. If the machine must be moved a considerable distance, transport it on a truck or trailer.

1. Remove the (3) screws securing the side panel from the left side of the machine and remove the panel.

2. Rotate by-pass valve on pump counterclockwise until it is fully open (Fig.11).

3. Before starting the engine, close the by-pass valve

securely by turning it clockwise. Do not exceed 5–8 ft-lßb torque. Do not start the engine when the valve is open.

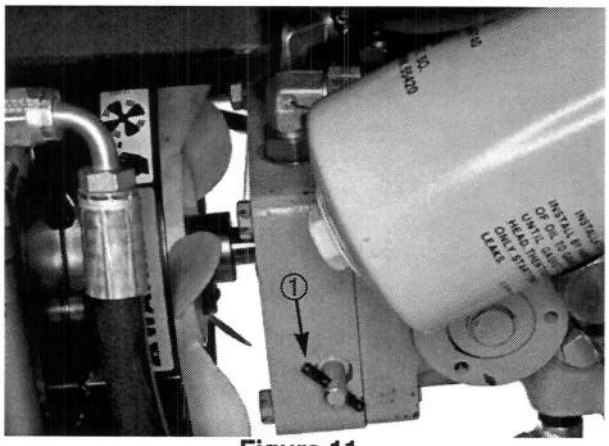

Figure 11

1. Bypass-valve

BREAK-IN PERIOD

1. Only 8 hours operating time is required for the SAND PRO break-in period.

2. The first hours of operation are critical to future dependability of the machine. Monitor its functions and performance closely so that minor difficulties, which could lead to major problems, are noted and can be corrected. Inspect the SAND PRO frequently during break-in for signs of oil leakage, loose fasteners, or any other malfunction.

OPERATING CHARACTERISTICS

Practice driving the SAND PRO because its operating characteristics are different than some utility vehicles. Two points to consider when operating the vehicle are transmission and engine speed.

To maintain somewhat constant engine speed, depress the traction pedal slowly. This allows the engine to keep up with ground speed of the vehicle. By contrast, pushing down quickly on the traction pedal will reduce engine rpm and, as a result, there will not be enough torque-power-to move the vehicle. Therefore, to transfer maximum power to the wheels, move the throttle to FAST and slightly depress the traction pedal. By comparison, maximum ground speed with no load results when the throttle is in the FAST position and the traction pedal is slowly but fully depressed. In summary, always keep the engine speed high enough to deliver maximum torque-power-to the wheels.

⚠ CAUTION

Using the machine demands attention. To prevent tipping or loss of control, use care when entering and leaving sand traps. Use extreme caution around ditches, creeks or other hazards. Use caution when operating the machine on a steep slope. Reduce speed when making sharp turns or when turning on hillsides. Avoid sudden stops and starts. Do not go from reverse to full forward without first coming to a complete stop.

INSPECTION AND CLEAN-UP

At the completion of operation, after the engine has cooled, thoroughly wash the machine with a garden hose - without a nozzle - so excessive water pressure will not cause contamination and damage to seals and bearings.

Make sure cooling fins and area around the engine cooling air intake are kept free of debris. After cleaning, it is recommended the machine be inspected for possible hydraulic fluid leaks, damage or wear to hydraulic and mechanical components.

Maintenance

⚠ CAUTION

Before servicing or making adjustments to the machine, stop the engine,, pull wires off the spark plugs and remove the key from the switch.

SandPro 5000
QUICK REFERENCE AID

CHECK/SERVICE (DAILY)

1. Oil level,engine
2. Oil level, hydraulic tank
3. Neutral interlock switch
4. Air filter
5. Engine cooling fins
6. Tire pressure (.(27,6 - 41,4 kPa)
7. Wheel nut torque (61-74 Nm)
8. Battery
9. Lubrication
10. Fuel—Gas only

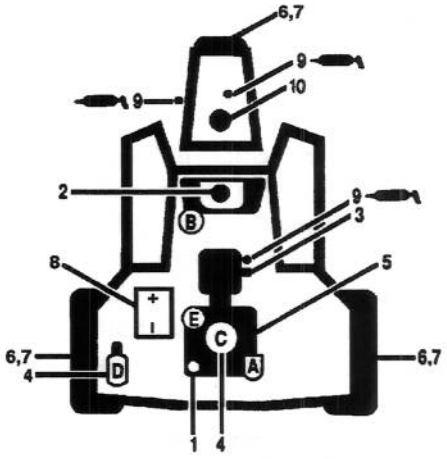

Fluid Specification/Change Intervals

	Fluid Type	Capacity	Change Intervals		Filter Part No.
			Fluid	Filter	
Engine Oil	SAE 30 SG	*6,6 l	50 hours	100 hours.	492932
Hydraulic Oil	Mobil DTE 26	*11,4 l*	+500 hours.	+500 hours.	23-9740
Air Cleaner (on Engine)				+**500 hours.	394018
Air Cleaner (on Fender)				+**500 hours.	33-1300
Fuel Tank Filter		20,8 l		1000 hours.	83-1320

* Including filter ** Clean every 100 hours + or yearly, whichever is less

LUBRICATION

The Sand Pro has (3) grease fittings that must be lubricated regularly with No. 2 General Purpose Lithium Base Grease. Lubricate the front wheel bearing and traction control linkage after every 50 hours of operation. Lubricate the steering shaft annually.

The bearings and bushings that must be lubricated are: the front wheel bearing (Fig. 12), the traction control linkage (Fig. 13) and steering shaft (Fig. 14).

1. Wipe grease fittings clean so foreign matter cannot enter the bearing or bushing.

2. Pump grease into the bearing or bushing.

3. Wipe up excess grease.

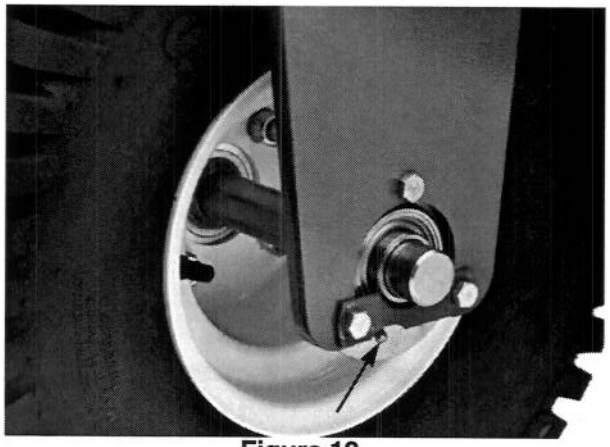

Figure 12

Note: To gain access to the grease fitting on the traction control linkage (Fig. 13), remove the (3) screws securing the side panel to the right side of the machine and remove the panel.

Note: To gain access to the grease fitting on steering shaft (Fig. 14), remove the (4) screws and spacers securing the fuel tank to the top of the machine and raise the front of the tank.

Note: We do not recommend lubricating the steering chain unless it becomes stiff because of rust. If the chain rusts, it may be lubricated lightly with a DRY-TYPE LUBRICANT.

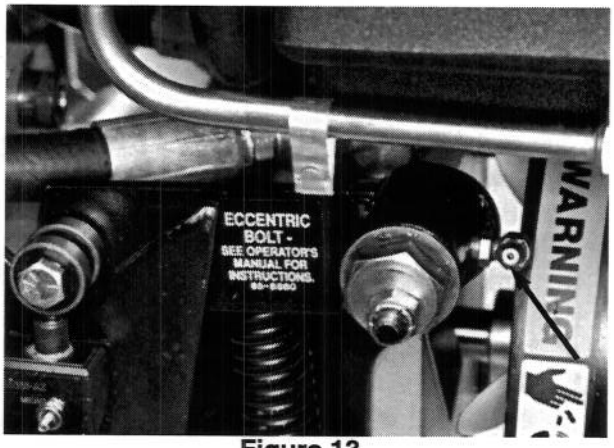

Figure 13

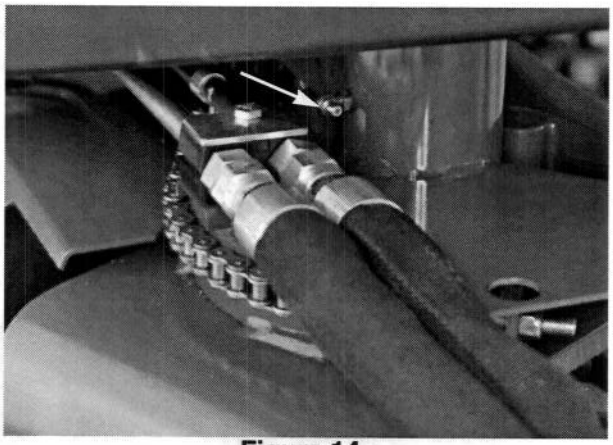

Figure 14

CHANGING ENGINE OIL AND FILTER

Change the oil initially after the first 8 hours of operation; thereafter change the oil every 50 hours and the filter every 100 hours.

1. Park the machine on a level surface and turn the engine off.
2. Remove the drain plug and let the oil flow into the drain pan. When the oil stops, install the drain plug.
3. Remove the oil filter. Apply a light coat of clean oil to the new filter gasket.
4. Screw the filter on by hand until the gasket contacts the filter adapter, then tighten ½ to ¾ turn further. DO NOT OVERTIGHTEN.
5. Add oil to crankcase, refer to CHECK CRANKCASE OIL.
6. Dispose of oil properly.

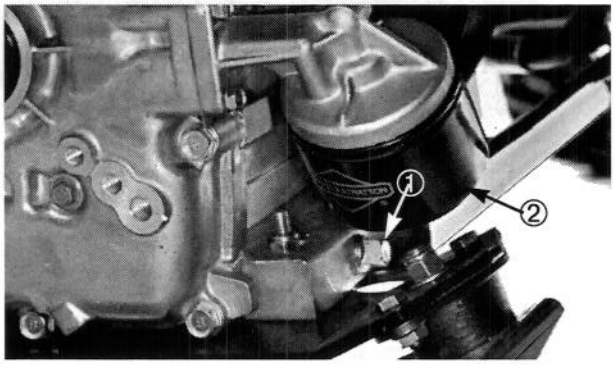

Figure 15

1. Drain plug 2. Oil filter

SERVICING THE AIR CLEANER

Inspect the paper element every 100 hours of operation and replace it when dirty or damaged. Do not wash the paper element or clean it with compressed air as damage will occur.

1. Park the machine on a level surface and turn the engine off.
2. Pivot the seat upward.
3. Remove the knobs and air cleaner cover.
4. Remove the filter and cover plate. Inspect the filter for cleanliness, ruptures, holes, and tears. Replace a defective filter element.

   Note: With the air cleaner disassembled, check its components for damage. Replace if necessary. Make sure the rubber breather tube in the base plate is securely in place or severe engine damage may occur. Also, make sure the carburetor breather hose is routed out through the engine vents.

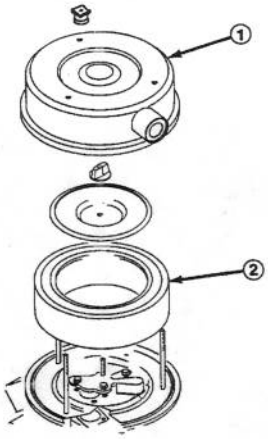

Figure 16

1. Air cleaner cover 2. Paper element

5. Reinstall the air cleaner and cover plate.
6. Reinstall the air cleaner cover and secure with knobs.

SERVICING THE REMOTE AIR CLEANER DUST CUP AND BAFFLE

Inspect the dust cup and rubber baffle once a week or every 50 hours operation. However, daily or more frequent inspection is required when operating conditions are extremely dusty and dirty. Never allow dust to build up closer than one inch from the rubber baffle.

1. Loosen the thumb screw until the dust cup and baffle can be removed. Separate the dust cup and baffle.

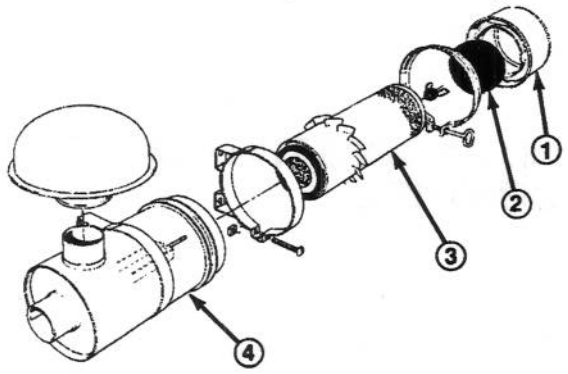

Figure 17

1. Dust cup
2. Baffle
3. Filter element
4. Air cleaner housing

2. Dump dust out of the dust cup. After cleaning the cup and baffle, assemble and reinstall both parts.

SERVICING THE REMOTE AIR CLEANER FILTER

Service the air cleaner filter every 100 hours or more frequently in extreme dusty or dirty conditions by washing or using compressed air. Replace the element after every five cleanings (500 hours) or annually, whichever comes first.

1. Remove and service dust cup; refer to *Servicing the Dust Cup and Baffle.*

2. Remove the wing nut w/gasket and slide the filter element out of the air cleaner body.

3. Clean the element by washing it in a solution of filter cleaner (Toro Part No. 27-7220) and water, or blow dirt out of the filter using compressed air.

Note: Compressed air is recommended when the element must be used immediately after servicing because a washed element must be dried before it is used. By comparison, washing the element cleans better than blowing dirt out with compressed air. Remember, though, the filter must be washed when exhaust soot is lodged in the filter pores.

Washing Method

IMPORTANT: Do not remove plastic fin assembly because washing removes dust from beneath fins.

A. Prepare a solution of filter cleaner and water and soak the filter element about 15 minutes. Refer to directions on the filter cleaner carton for complete information.

B. After soaking the filter for 15 minutes, rinse it with clear water. Maximum water pressure must not exceed 40 psi to prevent damage to the filter element.

C. Dry the filter element using warm, flowing air (160°F max), or allow element to air-dry. Do not use compressed air or a light bulb to dry the filter element because damage could result.

Compressed Air Method

IMPORTANT: Do not remove plastic fin assembly because back-blowing with compressed air removes dust from beneath fins.

A. Blow compressed air from inside to the outside of the dry filter element. Do not exceed 100 psi to prevent damage to the element.

B. Keep the air hose nozzle at least one inch from the pleated paper, and move the nozzle up and down while rotating the filter element. Inspect the element when dust and dirt are removed; refer to *Inspecting the Filter Element.*

4. Wipe inside of the air cleaner body with a damp cloth to remove excess dust. Slide the filter into the air cleaner body and secure it in place with a wing nut and gasket.

5. Install the dust cup and baffle. Move the thumb screw behind the air cleaner body and tighten it securely.

INSPECTING THE FILTER ELEMENT

1. Place a bright light inside the filter.

2. Rotate the filter slowly while checking for cleanliness, ruptures, holes, and tears. Replace a defective filter element.

3. Check the fin assembly, gasket, and screen for damage. Replace the filter if damage is evident.

ADJUSTING THE THROTTLE CONTROL

Proper throttle operation is dependent upon proper adjustment of the throttle control. Before adjusting the carburetor, assure the throttle control is operating correctly.

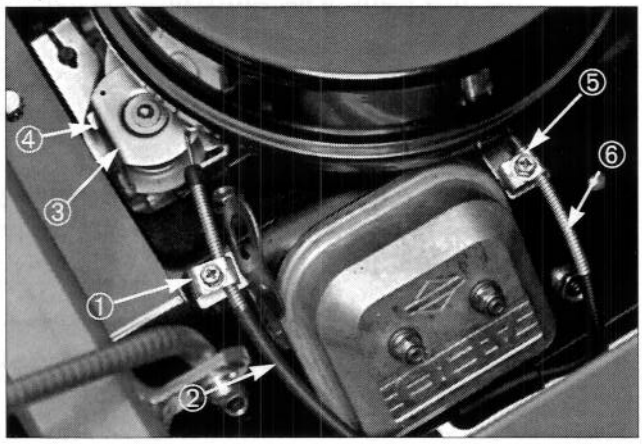

Figure 18

1. Throttle casing clamp screw
2. Throttle cable
3. Swivel
4. Stop
5. Choke casing clamp screw
6. Choke cable

1. Pivot the seat upward.

2. Loosen the cable clamp screw securing the cable to the engine.

3. Move the remote throttle control lever forward to the FAST position.

4. Pull firmly on the throttle cable until the back of the swivel contacts stop.

5. Tighten the cable clamp screw and check the engine RPM setting.

   High Idle: 3150 ± 50
   Low Idle: 1750 ± 50

ADJUSTING THE CHOKE CONTROL

1. Pivot the seat upward.

2. Loosen the cable clamp screw securing the cable to the engine.

3. Move the remote choke control lever forward to the CLOSED position.

4. Pull firmly on the choke cable until the choke butterfly is completely closed, then tighten the cable clamp screw.

ADJUSTING THE CARBURETOR AND SPEED CONTROL

⚠ WARNiNG

The engine must be running during adjustment of the carburetor and speed control. To guard against possible personal injury, keep hands, feet, face and other parts of the body away from any rotating engine parts

IMPORTANT: Before the carburetor and speed control are adjusted, the throttle and choke controls must be adjusted properly.

1. Pivot the seat upward and secure with the seat prop rod.

2. Start the engine and let it run at half throttle for five minutes to warm up.

3. Move the throttle control to SLOW. Hold the governor lever so the throttle lever is in the idle position (against idle stop screw) and adjust idle stop screw to 1750 ± 50 rpm by turning the screw in or out. Check speed with a tachometer.

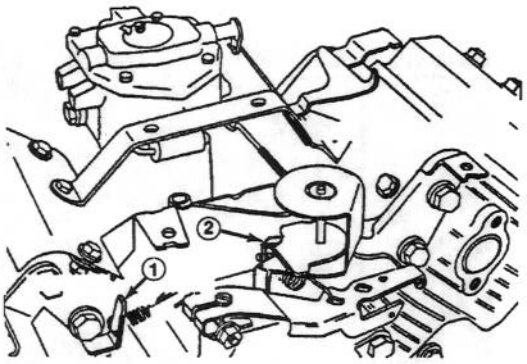

Shown with Air Cleaner Removed

Figure 19

1. Governed idle spring anchor tang
2. High-speed spring anchor tang

4. Turn the idle mixture screw slowly clockwise (lean mixture) until the engine speed just starts to decrease. Note the position of the needle.

   Now turn the idle mixture screw slowly counter-clockwise (rich mixture) until the engine speed just starts to decrease. Note position of the needle.

   Set the screw midway between the rich and lean settings.

5. After the idle mixture has been adjusted, hold the governor lever so the throttle lever is in the idle position (against the idle stop screw) and readjust the idle stop screw to bring idle speed to 1550± 50 rpm.

6. With the governor control lever in the governed idle position (no tension on the high-speed spring) bend the idle spring anchor tang to attain a governed idle speed of 1750± 50 rpm.

7. Move the throttle control to FAST. Bend the high speed spring anchor tang to attain a high speed of 3150 ±50 rpm.

REPLACING SPARK PLUGS

Replace the spark plugs after every 100 operating hours or yearly, which ever occurs first. Recommended air gap is 0.030".

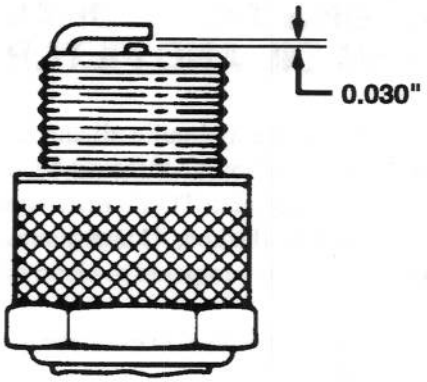

Figure 20

Correct spark plug to use is a Champion RC 12YC.

Note: The spark plug usually lasts a long time; however, the plug should be removed and checked whenever the engine malfunctions.

1. Clean the area around the spark plugs so foreign matter cannot fall into the engine cylinder when you remove the spark plug.

2. Pull the spark plug wires off spark plugs and remove the plugs from the cylinder head.

3. Check the condition of the side electrode, center electrode, and center electrode insulator to assure there is no damage.

   IMPORTANT: A cracked, fouled, dirty or otherwise malfunctioning spark plug must be replaced. Do not sand blast, scrape, or clean electrodes by using a wire brush because grit may eventually release from the plug and fall into the cylinder. The result is usually a damaged engine.

4. Set air gap between the center and side of electrodes at 0.030". Install a correctly gapped spark plug w/gasket seal, and tighten the plug firmly.

CLEANING CYLINDER HEAD FINS

To avoid overheating and possible engine damage, cooling fins on the cylinder head must be kept clean.

CHANGING THE HYDRAULIC SYSTEM OIL AND FILTER

Normally, change the hydraulic oil and filter after every 500 operating hours. If the oil becomes contaminated, contact your local TORO distributor because the system must be flushed. Contaminated oil looks milky or black when compared to clean oil.

1. Park the machine on a level surface and turn the engine off.

2. Remove the screws securing the side panels from the right and left sides of machine and remove the panels.

   Note: Place a funnel or trough under the drain plug, to direct oil into the drain pan and prevent hydraulic oil from running onto the machine components.

3. Remove the drain plug from reservoir and let hydraulic oil flow into the drain pan. Reinstall and tighten the plug when hydraulic oil stops draining.

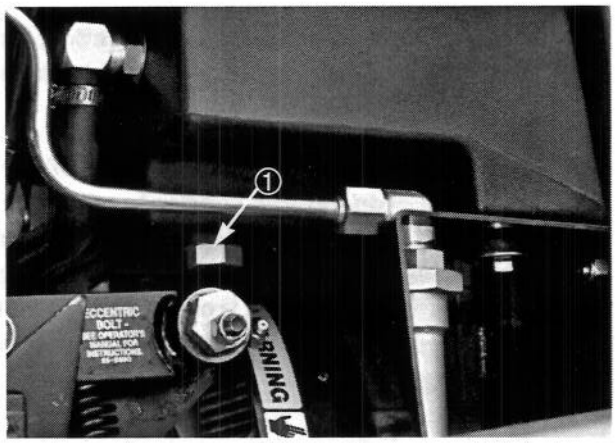

Figure 21

1. Hydraulic reservoir drain plug

4. Clean area around the filter mounting area. Place the drain pan under the filter and remove the filter.

5. Lubricate the sealing gasket on the replacement filter with Mobil DTE 26 hydraulic fluid, and hand turn it until gasket contacts the filter head. Then tighten ¾ turn further. The filter should now be sealed.

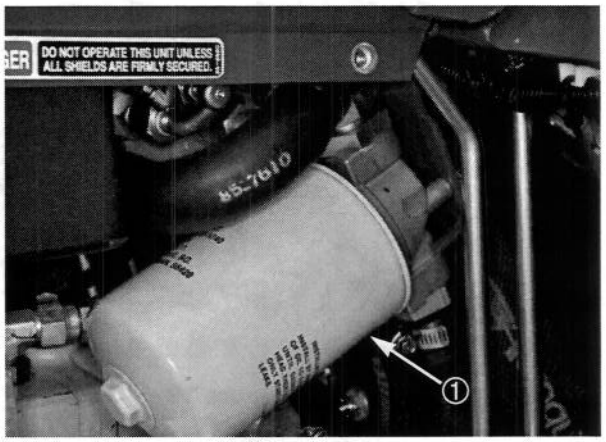

Figure 22

1. Hydraulic oil filter

6. Fill the hydraulic tank with hydraulic oil until the level is up to the top of cone point on the tank screen. DO NOT OVERFILL. Refer to *Check the Hydraulic System.*

7. Run the engine until the lift cylinder extends and retracts and forward and reverse wheel motion is achieved.

8. Stop the engine and check the oil level in the reservoir; add oil if necessary.

9. Check all connections for leaks.

10. Dispose of oil properly.

CHECKING HYDRAULIC LINES AND HOSES

After every 100 operating hours, check hydraulic lines and hoses for leaks, kinked lines, loose mounting supports, wear, loose fittings, weather deterioration and chemical deterioration. Make all necessary repairs before operating.

⚠ WARNING

Keep your body and hands away from pin hole leaks or nozzles that eject high-pressure hydraulic fluid. Use cardboard or paper to find hydraulic leaks. Hydraulic fluid escaping under pressure can penetrate skin and cause injury. Fluid accidentally injected into the skin must be surgically removed within a few hours by a doctor familiar with this form of injury or gangrene may result.

CHARGING THE HYDRAULIC SYSTEM

Whenever a hydraulic component is repaired or replaced the hydraulic oil filter should be changed and hydraulic system charged.

IMPORTANT: Make sure the hydraulic reservoir is filled with oil at all times when charging the hydraulic system.

1. Park the machine on a level surface and turn the engine off.

2. Remove the (3) screws securing the side panel to the right side of the machine and remove the panel.

3. Loosen the lock nut on the spring adjusting pin until the bearing moves freely from the cam on the lever, allowing pump shaft freedom to rotate during start-up.

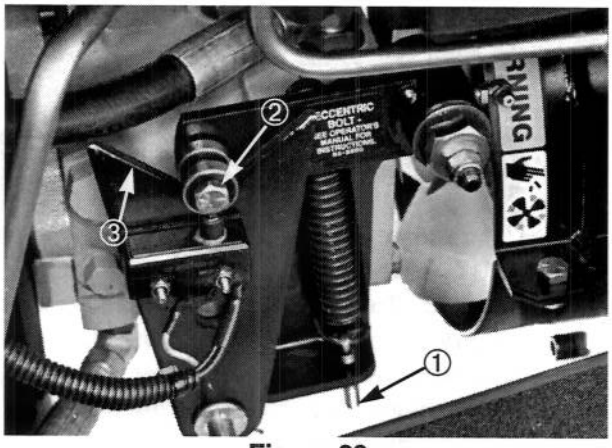

Figure 23

1. Spring adjusting pin
2. Bearing
3. Cam

4. Raise one rear wheel off the floor and place support blocks under the frame.

5. Start the engine and set the throttle to allow the engine to run at slow idle at 1800 rpm.

6. Actuate the lift valve lever until the lift cylinder rod moves in and out several times. If the cylinder rod does not move after 10–15 seconds, or the pump emits abnormal sounds, shut the engine off immediately and find the cause or problem. Inspect for the following:

   A. Loose filter or suction lines.

   B. Blocked suction line.

   C. Faulty charge relief valve.

   D. Faulty charge pump.

   If the cylinder moves in 10–15 seconds, go to step 7.

   Note: A hydrostatic transmission service manual (bulletin No. 9646) and a repair manual (bulletin No. 9659) can be obtained from:

   Sundstrand Corporation
   2800 East 13th Street
   Ames, Iowa 50010

7. Operate the traction pedal in forward and reverse directions. If the wheel rotates in the correct direction, stop the engine and adjust the spring adjusting pin lock nut. Adjust the traction neutral position: refer to *Adjusting The traction Drive For Neutral.*

ADJUSTING THE STEERING CHAIN

1. Place the front wheel in the straight-ahead position.

2. Adjust the locknuts until the chain is snug on both

sides of the sprocket.

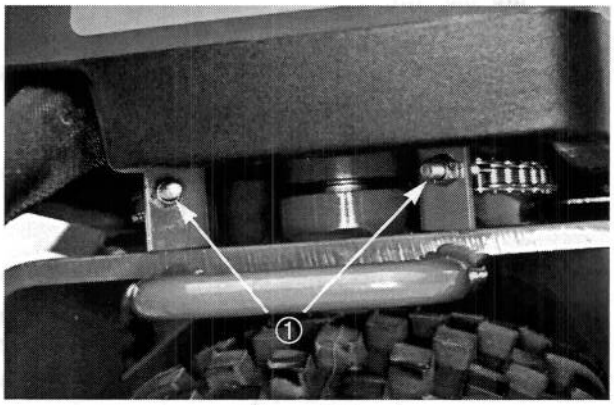

Figure 24

1. Adjusting nuts

3. Turn the steering wheel full left and full right to be sure the chain does not bind or hang up in either direction. Readjust as required.

REPLACING THE FUEL FILTER

An in-line filter is incorporated into the fuel line between the fuel tank and carburetor. Replace the filter every 1000 hours or sooner if fuel flow is restricted. Be sure the arrow on the filter is pointing away from the fuel tank (toward the carburetor).

1. Remove the (3) screws securing the side panel to the left side of the machine and remove the panel.

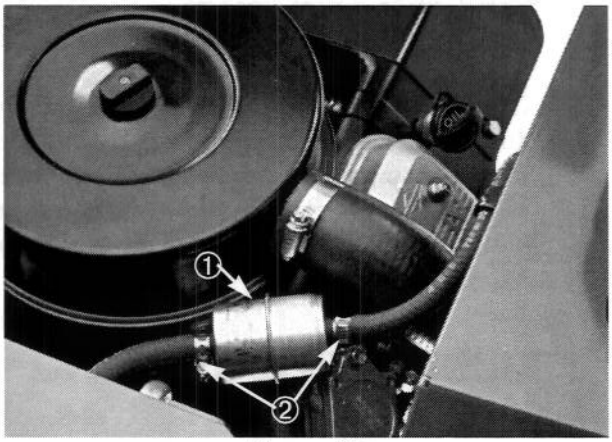

Figure 25

1. Fuel filter
2. Hose clamps

2. Close fuel shut-off valve, loosen the hose clamp on the carburetor side of filter and remove the fuel line from the filter.

3. Place a drain pan under the filter, loosen the remaining hose clamp and remove the filter.

4. Install the new filter with arrow on the filter body pointing away from the fuel tank (toward carburetor).

ADJUSTING THE TRACTION DRIVE FOR NEUTRAL

If the machine "creeps" when the traction pedal is in the neutral position, the traction cam must be adjusted.

1. Park the machine on a level surface and turn the engine off.

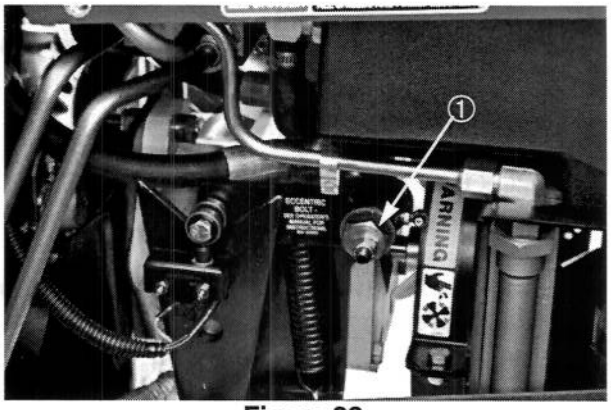

Figure 26

1. Traction adjustment cam

2. Remove the (3) screws securing the side panel to the right side of the machine and remove the panel.

⚠ WARNING

The engine must be running so final adjustment of the traction adjustment cam can be performed. To guard against possible personal injury, keep hands, feet, face and other parts of the body away from the muffler, other hot parts of the engine, and other rotating parts.

3. Raise one rear wheel off the floor and place sup-

port blocks under the frame.

4. Loosen the locknut on the traction adjustment cam.

5. Start the engine and turn the cam hex in both directions to determine the mid position of the neutral span.

6. Tighten the locknut securing adjustment.

7. Stop the engine. Remove the jack stands and lower the machine to the shop floor. Test drive the machine to make sure it does not creep.

ADJUSTING PEDAL FOR FORWARD

The pedal must be adjusted for forward if the jam nuts on the control rod are loosened or if the pedal is removed.

1. Park the machine on a level surface and turn the engine off.

2. Make sure the pump is in neutral.

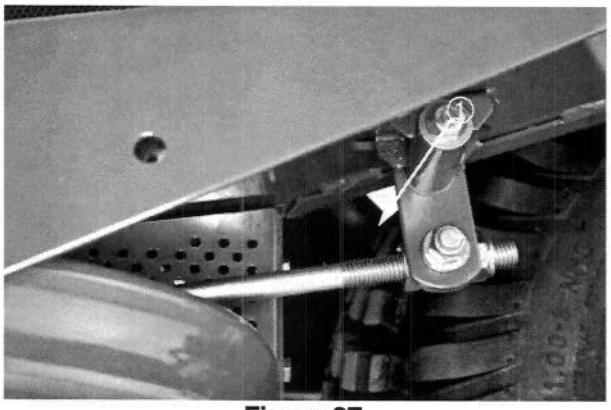

Figure 27

1. Control rod

3. Loosen the jam nuts on the control rod.

4. Press down on the forward pad of the pedal until the pedal rod contacts the footrest. Tighten the jam nuts.

ADJUSTING THE STEERING WHEEL TILT LEVER

If the steering wheel tilt lever does not lock after adjusting the wheel position, an adjustment to the lever is required.

1. Loosen the capscrew securing the lever to the locking pin.

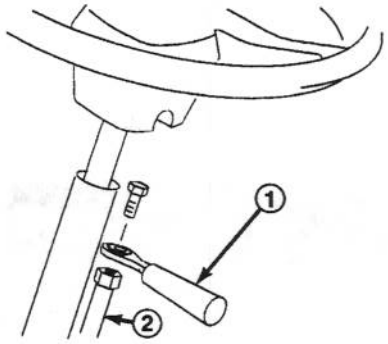

Figure 28

1. Lever 2. Locking pin

2. Lift the lever off the hex on the locking pin. Turn the lever counterclockwise to the next hex on the pin.

3. Push the lever onto the locking pin hex and secure it with a capscrew.

4. Check adjustment and repeat if necessary.

BATTERY STORAGE

If the machine will be stored for more than 30 days, remove the battery and charge it fully. Either store it on a shelf or on the machine. Leave the cables disconnected if stored on the machine. Store the battery in a cool atmosphere to avoid quick deterioration of the charge in the battery. To prevent the battery from freezing, make sure it is fully charged. The specific gravity of a fully charged battery is 1.250.

BATTERY CARE

1. The battery's electrolyte level must be properly maintained and the top of the battery kept clean. If the machine is stored in a location where temperatures are extremely high, the battery will run down more rapidly than if the machine is stored in a location where temperatures are cool.

2. Keep the top of the battery clean by washing it periodically with a brush dipped in an ammonia or bicarbonate of soda solution. Flush the top surface with water after cleaning. Do not remove the fill cap while cleaning.

3. Battery cables must be tight on the terminals to provide good electrical contact.

⚠ WARNING

Connecting cables to the wrong post could result in personal injury and/or damage to the electrical system

4. If corrosion occurs at the battery terminals, disconnect the cables—negative (–) cable first—and scrape the clamps and terminals separately. Reconnect the cables—positive (+) cable first—and coat the terminals with petroleum jelly.

5. Check the electrolyte level every 25 operating hours or, if the machine is in storage, every 30 days.

6. Maintain the cell fluid level with distilled or demineralized water. Do not fill cells above the fill line.

⚠ CAUTION

Wear safety goggles and rubber gloves when working with electrolyte. Charge the battery in a well ventilated place so gasses produced while charging can dissipate. Since the gases are explosive, keep open flames and electrical sparks away from the battery; do not smoke. Nausea may result if the gases are inhaled. Unplug the charger from the electrical outlet before connecting or disconnecting the charger leads.