Form No. 3413-190 Rev A

TORO®

Count on it.

Parts Catalog

Safety and Security Cage Kit

Groundsmaster® 4500, 4700 or Reelmaster® 7000 Series Traction Unit with 2 Post ROPS Extension

Model No. 136-2030

Register at www.Toro.com.
Original Instructions (EN)

CE

3413-190 A

Ordering Replacement Parts

To order replacement parts, please supply the part number, the quantity, and the description of each part desired.

Understanding Reference Numbers

Each identified part in an illustration has a reference number. The reference number for a part also appears in the parts list, along with other information about the part.

This catalog uses two special reference number formats, one to indicate parts in a service assembly and another to indicate the quantity of a given part in an illustration.

Service Assembly Reference Numbers

Parts in service assemblies have reference numbers in the form a:b. The a represents the reference number of the entire service assembly and the b represents a sequential number unique to each part within the service assembly.

For example, a wheel assembly might be identified by reference number 6, the tire by 6:1, the valve by 6:2, and the wheel by 6:3. When you order the assembly identified by reference number 6, you receive all parts identified by reference numbers 6:1,6:2, and 6:3. However, you may also order any part individually. Reference numbers of this type appear in illustration and in parts lists.

Reference Numbers Indicating Quantity

In an illustration, if a reference number indicates more than one part, the reference number has the form nX y. The n represents the quantity of the part, the X is the multiplication symbol, and the y represents the reference number.

For example, in an illustration, the reference number 2X 37 means that two of the parts identified by reference number 37 are indicated.

Contents

Safety and Security Cage Assembly 4
LH Security Door Assembly 6
RH Security Door Assembly 8

© 2017—The Toro® Company
8111 Lyndale Avenue South
Bloomington, MN 55420

Contact us at www.Toro.com.
Printed in the USA.
All Rights Reserved

Safety and Security Cage Assembly

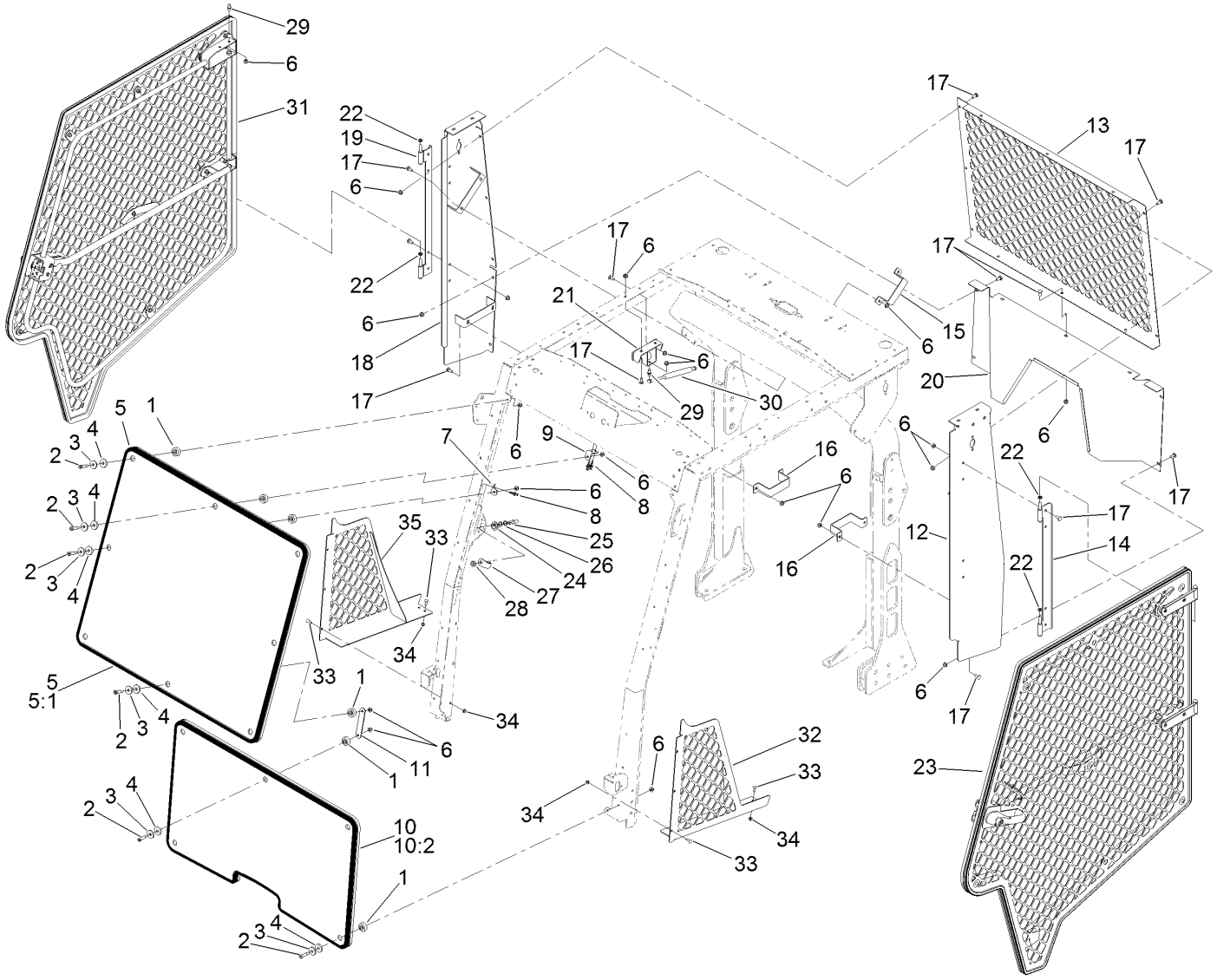

Safety and Security Cage Assembly (continued)

Ref.	Part Number	Qty.	Description
1	125-9537	13	Bushing-Flange
2	125-9521	13	Screw-Shoulder, HSH
3	130-5815	13	Washer-Backup
4	125-9982	14	Bushing-Flange
5	132-3415	1	Upper Windshield ASM
5:1	132-3414	1	Trim-Windshield, Upper
6	104-8300	57	Nut-HF, NI
7	132-3715-03	2	Tab-Mount
8	125-9622	6	Rivet-Blind
9	132-3716-03	1	Tab-Mount
10	136-2089	1	Lower Windshield ASM
10:2	136-2086	1	Trim-Windshield, Lower
11	132-3717-03	1	Tab-Dual
12	136-2225-03	1	Support-Door, LH
13	136-2091-03	1	Panel-Screen, Rear
14	132-3729-03	1	Mount-Door, LH
15	136-2095-03	2	Mount-Clamp, Upper
16	136-2099-03	2	Bracket-Mount, Lower
17	3230-23	40	Screw-CARR
18	136-2226-03	1	Support-Door, RH
19	132-3730-03	1	Mount-Door RH
20	136-2101-03	1	Panel-Rear, Lower
21	133-0984-03	2	Mount-Gas Spring
22	121-8441	4	Washer-Spacer
23	136-2235	1	LH Security Door ASM
24	125-9992	2	Adjuster-Stud
25	132-3718	2	Stud-Striker
26	73-0040	4	Washer-Thrust
27	121-8393	2	Guard-Striker
28	107-8116	2	Nut-Jam, Adhesive
29	98-3104	4	Stud-Ball
30	130-6083	2	Spring-Gas, Door
31	136-2236	1	RH Security Door ASM
32	136-2203-03	1	Panel-LH
33	1-807512	10	Bolt-CARR
34	104-7201	10	Nut-HF
35	136-2204-03	1	RH Panel ASM

LH Security Door Assembly

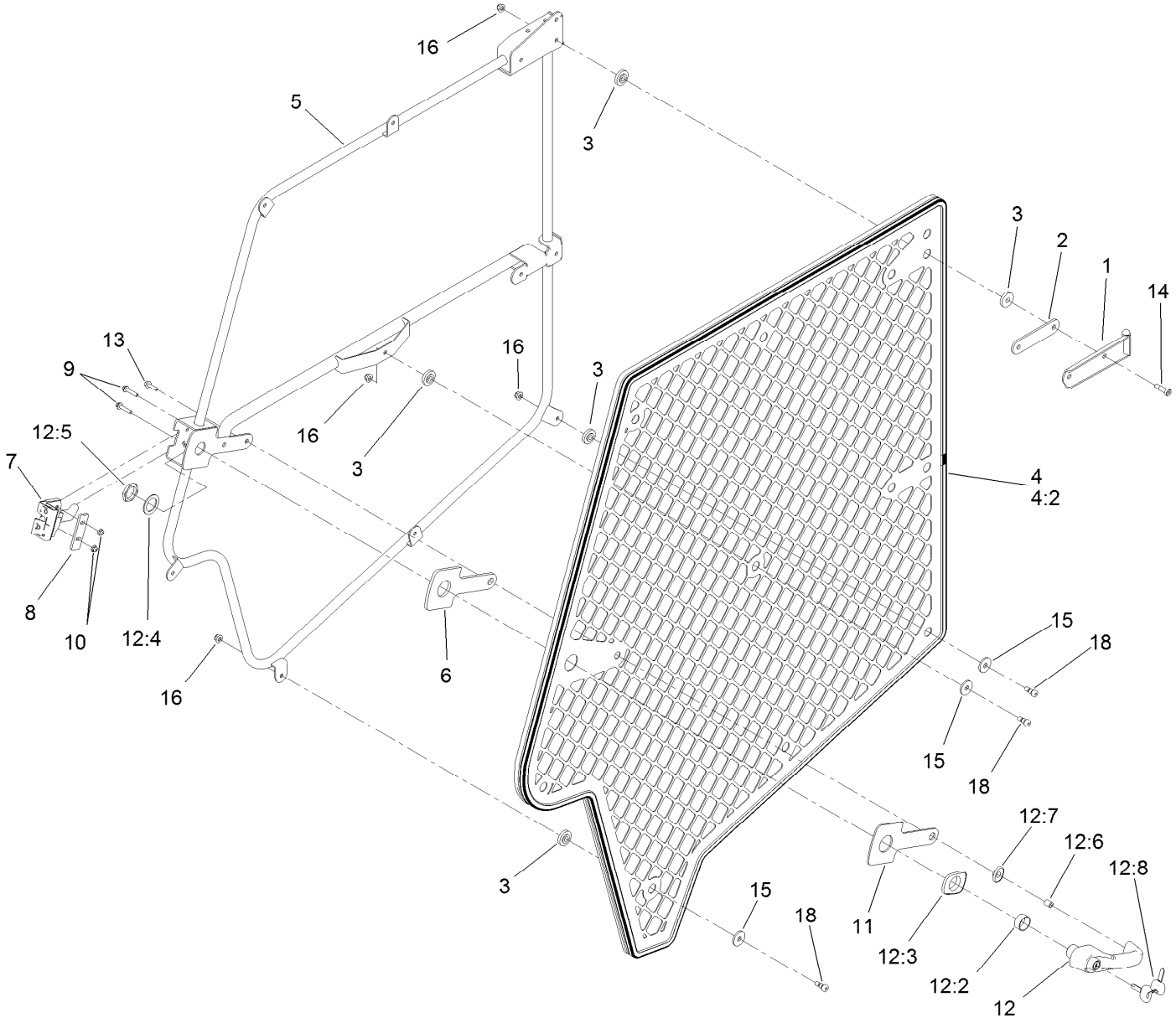

LH Security Door Assembly (continued)

Ref.	Part Number	Qty.	Description
1	125-9619-03	2	Hinge-Door, LH
2	136-2216-03	2	Spacer
3	125-9982	16	Bushing-Flange
4	136-2231	1	Security Screen Door ASM-LH
4:2	136-2230	1	Trim-Seal
5	136-2106-03	1	Frame-Door, LH
6	121-8331	1	Gasket-Handle
7	121-8391	1	Latch-LH
8	121-8395	1	Plate-Support, Latch
9	3234-21	2	Screw-HHF
10	104-7201	2	Nut-HF
11	130-6172-03	1	Spacer
12	121-8630	1	Handle ASM
12:2	121-8628	1	Cylinder-Mounting, Key
12:3	121-8322	1	Grommet-Mounting, Large
12:4	121-8327	1	Washer
12:5	121-8328	1	Nut
12:6	121-8627	1	Cylinder-Mounting, End
12:7	121-8323	1	Grommet-Mounting, Small
12:8	125-9531	1	Key-Set
13	33103-025	1	Screw-HHF
14	125-9520	4	Screw-Shoulder, HSH
15	125-9676	8	Washer-Backup
16	104-8300	12	Nut-HF, NI
18	1-809056	8	Screw-HSH

RH Security Door Assembly

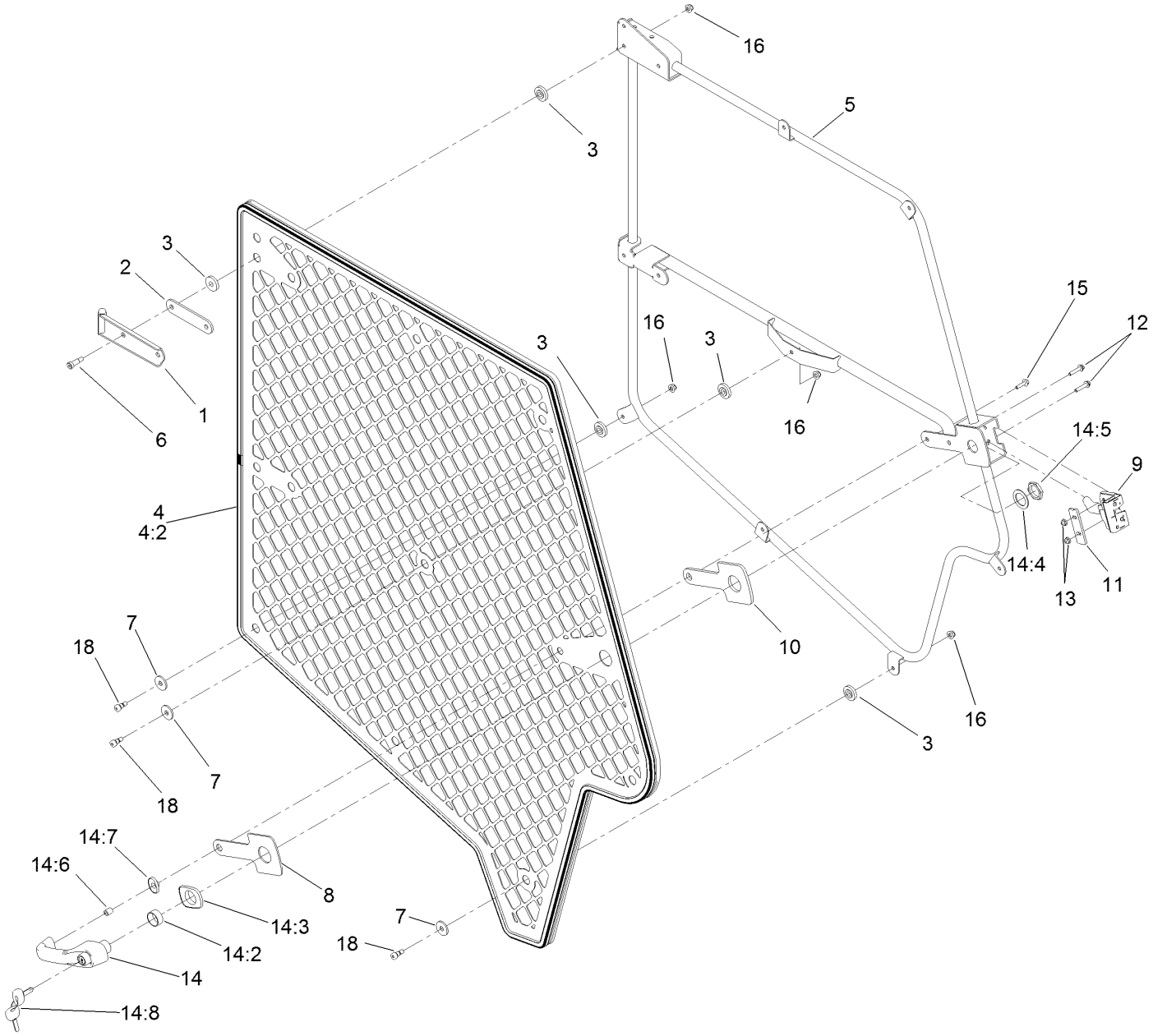

RH Security Door Assembly (continued)

Ref.	Part Number	Qty.	Description
1	125-9618-03	2	Hinge-Door, RH
2	136-2216-03	2	Spacer
3	125-9982	16	Bushing-Flange
4	136-2232	1	Security Screen Door ASM-RH
4:2	136-2230	1	Trim-Seal
5	136-2107-03	1	Frame-Door, RH
6	125-9520	4	Screw-Shoulder, HSH
7	125-9676	8	Washer-Backup
8	130-6172-03	1	Spacer
9	121-8390	1	Latch-RH
10	121-8331	1	Gasket-Handle
11	121-8395	1	Plate-Support, Latch
12	3234-21	2	Screw-HHF
13	104-7201	2	Nut-HF
14	121-8630	1	Handle ASM
14:2	121-8628	1	Cylinder-Mounting, Key
14:3	121-8322	1	Grommet-Mounting, Large
14:4	121-8327	1	Washer
14:5	121-8328	1	Nut
14:6	121-8627	1	Cylinder-Mounting, End
14:7	121-8323	1	Grommet-Mounting, Small
14:8	125-9531	1	Key-Set
15	33103-025	1	Screw-HHF
16	104-8300	12	Nut-HF, NI
18	1-809056	8	Screw-HSH

Notes:

Notes:



Count on it.