FORM NO. 3317-454 UK

TORO®

MODEL NO. 30569—50001 & UP

OPERATOR'S MANUAL

GUARDIAN® 62" RECYCLER®



ONLY COPY
DO NOT REMOVE
Tech. Publications

© The TORO Company 1995

FOREWORD

The Guardian® 62" Recycler® Cutting Deck has advanced concepts in engineering, design and safety; and if maintained properly, will give excellent service.

Since this is a high-quality product, Toro is concerned about the future use of the machine and the safety of the user. Therefore, read this manual to familiarize yourself with proper operation and maintenance instructions. The major sections of the manual are:



Certain information in this manual is emphasized. DANGER, WARNING and CAUTION identify personal safety related information. IMPORTANT identifies mechanical information demanding special attention. Be sure to read this directive because it deals with the possibility of damaging a part or parts of the machine. NOTE identifies general information worthy of special attention.

Whenever you have questions or need service, contact your local authorized Toro Distributor. In addition to having a complete line of accessories and professional turf care service technicians, the distributor has a complete line of genuine TORO replacement parts to keep your machine operating properly. Keep your TORO all TORO. Buy genuine TORO parts and accessories.

Table of Contents

SAFETY INSTRUCTIONS	3-5
SYMBOL GLOSSARY	6-8
SPECIFICATIONS	9
BEFORE OPERATING	10
Check Lubricant in Gear Box	10
Adjusting Height-of-Cut	12
Adjusting Skids	13
Grease Cutting Unit	13
OPERATING INSTRUCTIONS	13
Operating Tips	13
LUBRICATION	14
Grease Bearings, Bushings and Gear Box	14
MAINTENANCE	15-19
Trouble Shooting	15
Separating The cutting Unit from Traction Unit	16
Mounting The cutting Unit to Traction Unit	16
Replacing Drive Belt	16
Servicing Front Bushings in The castor Arms	17
Servicing The castor Wheels and Bearings	17
Removing Cutter Blades	18
Inspecting and Sharpening Blades	18
Correcting The cutting Unit Mismatch	19
IDENTIFICATION AND ORDERING	20

Safety

Training

1. Read the instructions carefully. Be familiar with the controls and the proper use of the equipment.

2. Never allow children or people unfamiliar with these instructions to use the lawnmower. Local regulations may restrict the age of the operator.

3. Never mow while people, especially children, or pets are nearby.

4. Keep in mind that the operator or user is responsible for accidents or hazards occurring to other people or their property.

5. Do not carry passengers.

6. All drivers should seek and obtain professional and practical instruction. Such instruction should emphasize:
   - the need for care and concentration when working with ride-on machines;
   - control of a ride on machine sliding on a slope will not be regained by the application of the brake. The main reasons for loss of control are:
     - insufficient wheel grip;
     - being driven too fast;
     - inadequate braking;
     - the type of machine is unsuitable for its task;
     - lack of awareness of the effects of ground conditions, especially slopes;

Preparation

1. While mowing, always wear substantial footwear and long trousers. Do not operate the equipment when barefoot or wearing open sandals.

2. Thoroughly inspect the area where the equipment is to be used and remove all objects which may be thrown by the machine.

3. **WARNING—Petrol is highly flammable.**
   - Store fuel in containers specifically designed for this purpose.
   - Refuel outdoors only and do not smoke while refueling.
   - Add fuel before starting the engine. Never remove the cap of the fuel tank or add petrol while the engine is running or when the engine is hot.
   - If petrol is spilled, do not attempt to start the engine but move the machine away from the are of spillage and avoid creating any source of ignition until petrol vapors have dissipated.
   - Replace all fuel tanks and container caps securely.

4. Replace faulty silencers.

5. Before using, always visually inspect to see that the blades, blade bolts and cutter assembly are not worn or damaged. Replace worn or damaged blades and bolts in sets to preserve balance.

6. On multi-bladed machines, take care as rotating one blade can cause other blades to rotate.

Operation

1. Do not operate the engine in a confined space where dangerous carbon monoxide fumes can collect.

2. Mow only in daylight or in good artificial light.

3. Before attempting to start the engine, disengage all blade attachment clutches and shift into neutral.

4. Do not use on slopes of more than:
   - Never mow side hills over 5°
   - Never mow uphill over 10°
   - Never mow downhill over 15°

5. Remember there is no such thing as a "safe" slope.

Travel on grass slopes requires particular care. To guard against overturning:

- do not stop or start suddenly when going up or downhill;
- engage clutch slowly, always keep machine in gear, especially when travailing downhill;
- machine speeds should be kept low on slopes and during tight turns;
- stay alert for bumps and hollows and other hidden hazards;
- never mow across the face of the slope, unless the lawnmower is designed for this purpose.

6. Use care when pulling loads or using heavy equipment.
   - Use only approved drawbar hitch points.
   - Limit loads to those you can safely control.
   - Do not turn sharply. Use care when reversing.
   - Use counterweight(s) or wheel weights when suggested in the instruction handbook .

7. Watch out for traffic when crossing or near roadways.

8. Stop the blades rotating before crossing surfaces other than grass.

9. When using any attachments, never direct discharge of material toward bystanders nor allow anyone near the machine while in operation .

10. Never operate the lawnmower with defective guards, shields or without safety protective devices in place.

11. Do not change the engine governor settings or overspeed the engine. Operating the engine at excessive speeds may increase the hazard of personal injury.

12. Before leaving the operator's position:
    - disengage the power take-off and lower the attachments;
    - change into neutral and set the parking brake;
    - stop the engine and remove the key.

13. Disengage drive to attachments, stop the engine, and disconnect the spark plug wire(s)or remove the ignition key
    - before cleaning blockages or unclogging chute;
    - before checking, cleaning or working on the lawnmower;
    - after striking a foreign object. Inspect the lawnmower for damage and make repairs before restarting and operating the equipment;
    - if the machine starts to vibrate abnormally (check immediately).

14. Disengage drive to attachments when transporting or not in use.

15. Stop the engine and disengage drive to attachment
    - before refueling;
    - before removing the grass catcher;
    - before making height adjustment unless adjustment can be made from the operator's position.

16. Reduce the throttle setting during engine runout and, if the engine is provided with a shutoff valve, turn the fuel off at the conclusion of mowing.

Maintenance and Storage

1. Keep all nuts, bolts and screws tight to be sure the equipment is in safe working condition.

2. Never store the equipment with petrol in the tank inside a building where fumes may reach an open flame or spark.

3. Allow the engine to cool before storing in any enclosure.

4. To reduce the fire hazard, keep the engine, silencer, battery compartment and petrol storage area free of grass, leaves, or excessive grease.

5. Check the grass catcher frequently for wear or deterioration.

6. Replace worn or damaged parts for safety.

7. If the fuel tank has to be drained, this should be done outdoors

8. On multi-bladed machines, take care as rotating one blade can cause other blades to rotate.

9. When machine is to be parked, stored or left unattended, lower the cutting means unless a positive mechanical lock is used.

Symbol Glossary

Safety alert symbol

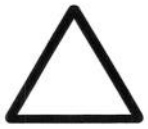

Safety alert symbol



Read operator's manual



Consult technical manual for proper service procedures



Thrown or flying objects—whole body exposure



Thrown or flying objects—rotary side-mounted mower. Keep deflector shield in place.



Severing toes or foot—mower blade



Severing fingers or hand—mower blade



Rotating blade can cut off toes or fingers. Stay clear of blade as long as the engine is running.



Do not open or remove safety shields while the engine is running.



Dismemberment—Mower in rearward position.



Stay a safe distance from the machine.

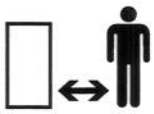

Stay a safe distance from the mower.



Keep children a safe distance from the machine.



Machine rollover—side hill



Machine rollover—up hill



Machine rollover—down hill



Machine rollover—roll over protection system



Fast 

Slow 

Decreasing/increasing 

On/Run

Off/Stop 

Engine 

Engine start 

Engine stop 

Choke 

Engine temperature 

Engine lubricating oil pressure 

Engine lubricating oil pressure 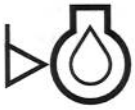

Fuel 

Fuel level 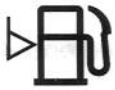

Volume empty 

Volume full 

Battery charging condition 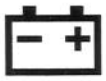

Head lights—Main/high beam 

Brake system 

Parking brake 

Clutch 

PTO (Power Take Off) 

Engage 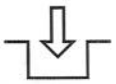

Disengage 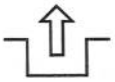

Unlock 

Lock 

Cutting element—basic symbol



Cutting element—height adjustment



Cutting unit—lower



Cutting unit—raised

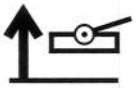

Cutting or entanglement of foot—rotating auger



Severing of fingers or hand—impeller blade



Keep a safe distance from snowthrower.



Stay a safe distance from snowthrower.



Tractors must be equipped with 45 kg rear wheel wheel weight with this attachment installed.



Machine rollover protection system snowthrower



Severing of hand—rotating knives



Severing of foot—rotating knives



Riding on this machine is allowed only on a passenger seat and only if the driver's view is not hindered.



Crushing of fingers or hands—force applied from the side



Kickback or upward motion—stored energy



Shut off engine and remove key before performing maintenance or repair work.



Machine travel direction—combined



Low — L

High — H

Reverse — R

Neutral — N

First gear — 1

Second gear — 2

Third gear up to a maximum number of forward gears. — 3

Specifications

Width of Cut: 62 in.

Height-of-Cut: Adjustable from 1-1/2" to 4-1/2" in 1/2" increments.

Cutter Housing: 4" deep housing is made of 12 gauge steel and reinforced with 10 gauge channel and plates.

Cutting Unit Drive: Isolation mounted gear box on the cutting unit is driven by PTO shaft. Power is transmitted to the blades by one hex "AA" section belt. Spindle shafts are 1 inch diameter and supported by two greaseable, tapered roller bearings.

Cutting Unit Blades: Three 21-3/4" long and 1/4" thick heat treated steel, Recycler blades .

Castor Wheels: Front and rear castor wheels have 8 in. x 3.50 in. hard rubber tires and roller bearings.

Cutting Unit Lift: Independent lift arms and hydraulic weight transfer provide deck flotation.

Weight: 340 lb.

Specifications and design subject to change without notice.

Before Operating

CHECK THE LUBRICANT IN THE GEAR BOX

The gear box in designed to operate on SAE 80-90 weight. gear lubrication. Although the gear box is shipped with lubricant from the factory, check the level before operating the cutting unit.

1. Position the machine and cutting unit on a level surface.

2. Remove the check plug from side of the gear box and make sure the lubricant is up to the bottom of the hole. If lubricant level is low, remove the fill plug on top of the gear case and add enough lubricant to bring it up to bottom of the hole in the side.

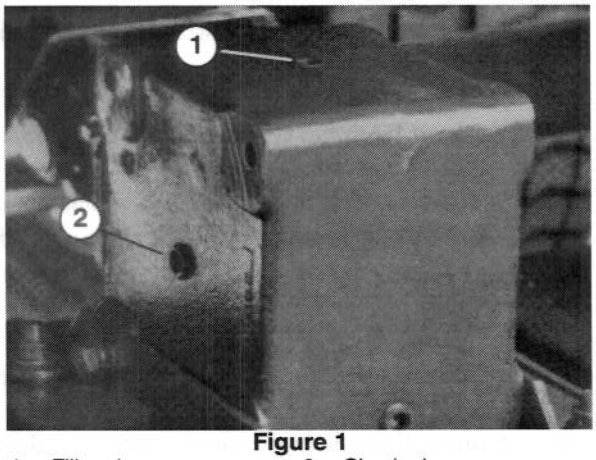

Figure 1

1. Filler plug
2. Check plug

ADJUSTING HEIGHT-OF-CUT (Fig. 2–3)

The height-of-cut is adjustable from 1-½ to 4-½ inches in ½ inch increments, by adding or removing an equal number of spacers from the front and rear castor forks. The height-of-cut chart below gives the combinations of spacers to use for all height-of-cut settings.

Height of Cut Setting	Spacers Below Castor Arm	
	Front	Rear
1.5 inch	0	0
2 inch	1	1
2.5 inch	2	2
3 inch	3	3
3.5 inch	4	4
4 inch	5	5
4.5 inch	6	6

1. Start the engine and raise the cutting unit so the height-of-cut can be changed. Stop the engine after the cutting unit is raised.

FRONT CASTOR WHEELS

1. Remove the tensioning cap from the spindle shaft and slide the spindle out of front castor arm. Remove the washer from the spindle shaft. Slide spacers onto the spindle shaft to get the desired height-of-cut, then slide the washer onto shaft.

2. Push the castor spindle through front castor arm, install the other thrust washer and remaining spacers onto the spindle and install the tensioning cap to secure the assembly .

REAR CASTOR WHEELS

1. Remove the tensioning cap from the spindle shaft.

   Note: The rear castor fork assembly doesn't need to be removed from the castor arm to change the height of cut.

2. Remove or add "C" shaped spacers at the narrow portion of the spindle shaft, below the castor arm to get the desired height of cut. Make sure the thrust the washers—not the spacers—contact the top and bottom of the castor arm.

3. Install the tensioning cap to secure the assembly .

4. Assure all four castor wheels are set at the same height of cut.

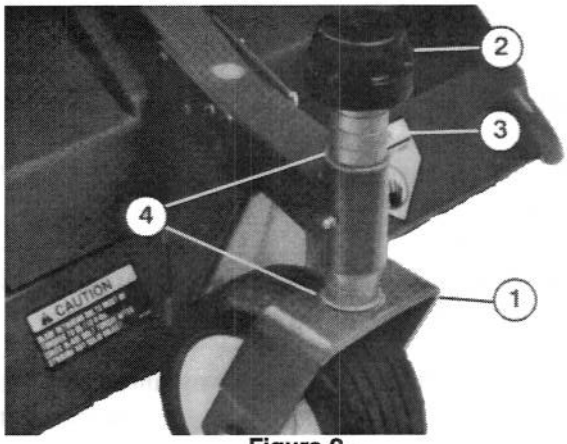

Figure 2

1. Front castor wheel
2. Lynch pin
3. Spacers
4. Thrust washers

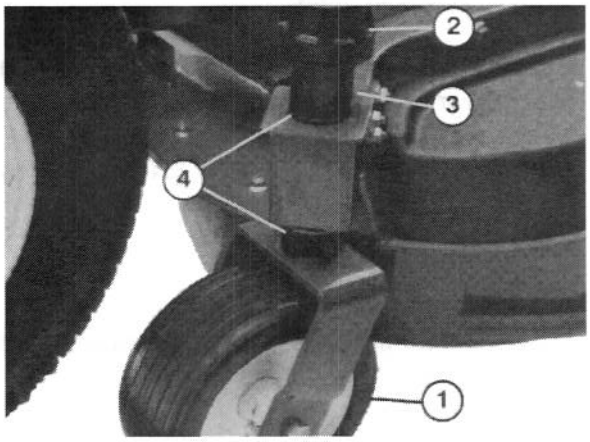

Figure 3

1. Rear castor wheel
2. Lynch pin
3. Spacers
4. Thrust washers

ADJUSTING THE SKIDS (Fig. 4)

1. Adjust the skids by removing the flange nuts, positioning the skids at the desired position and reinstalling the flange nuts.

GREASE THE CUTTING UNIT

Before the cutting unit is operated, it must be greased: refer to *Lubrication.* Failure to properly grease the cutting unit will result in premature failure of critical parts.

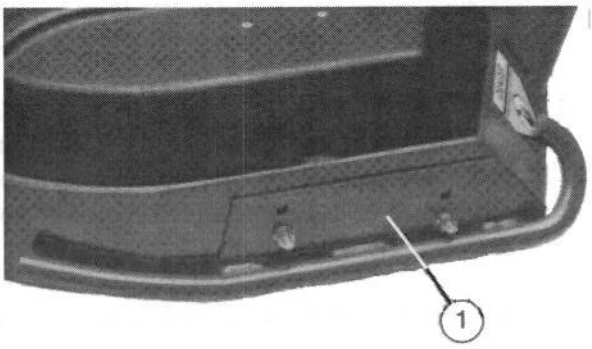

Figure 4

1. Skid
2. Flange nuts

Operating Instructions

OPERATING TIPS

1. MOW WHEN GRASS IS DRY—Mow either in the late morning to avoid the dew, which causes grass clumping or in late afternoon to avoid the damage that can be caused by direct sunlight on sensitive, freshly mowed grass.

2. SELECT THE PROPER HEIGHT-OF-CUT SETTING TO SUIT CONDITIONS—Remove approximately one inch or no more than ⅓ of the grass blade when cutting. In exceptionally lush and dense grass you may have to raise your height-of-cut setting another notch.

3. MOWING IN EXTREME CONDITIONS—Air is required to cut and recut grass clippings in the mower housing, so do not set the height of cut too low or totally surround the housing by uncut grass. Always try to have one side of the mower housing free from uncut grass, allowing air to be drawn into the housing. When making an initial cut through center of an uncut area, operate the machine slower and back up if the mower starts to clog.

4. MOW AT PROPER INTERVALS—Under most normal conditions, you'll need to mow every 4–5 days. But remember, grass grows at different rates at different times. To maintain the same height of cut, which is a good practice, you'll need to cut more frequently in early spring; as the grass growth rate slows in mid summer, cut only every 8-10 days. If you are unable to mow for an extended period due to weather conditions or other

reasons, mow first with the height of cut at a high level; then mow again 2-3 days later with a lower height setting.

5. ALWAYS MOW WITH SHARP BLADES—A sharp blade cuts cleanly and without tearing or shredding the grass blades like a dull blade. Tearing and shredding causes the grass to turn brown at the edges which impairs growth and increases susceptibility to diseases.

6. STOPPING—If forward motion has to be stopped while cutting, a clump of grass clippings may be deposited on lawn. Follow this procedure for stopping while cutting:

   A. With the deck engaged, move onto a previously cut area.

   B. Shift to neutral, move the throttle control lever to the SLOW position and turn ignition key to OFF.

7. AFTER OPERATING—To assure optimum performance, clean the underside of the mower housing, especially around inserts (kickers) after each use. If residue is allowed to build up in the mower housing and on inserts, cutting performance will decrease.

Maintenance

LUBRICATION

GREASE BEARINGS, BUSHINGS AND GEAR BOX (Fig. 5–8)

The cutting unit must be lubricated regularly. If operating the machine under normal conditions, lubricate the castor bearings and bushings with No. 2 general purpose lithium base grease or molybdenum base grease, after every 8 hours of operation or daily, whichever comes first

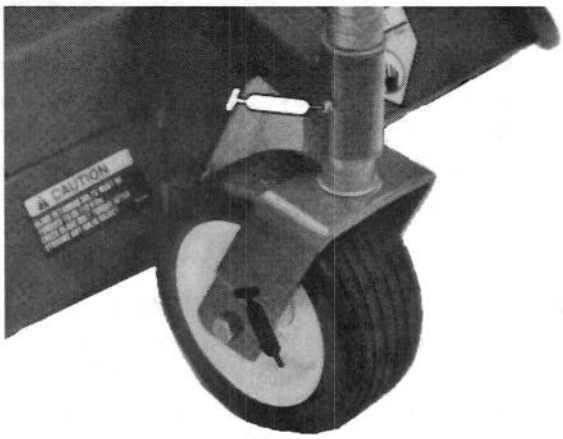

Figure 5

1. The cutting unit has bearings and bushings that must be lubricated, and these lubrication points are: front castor spindle bushings (Fig. 5); rear castor spindle shaft (Remove the shaft from the castor arm and coat the hex shaft with grease every 50 hours (Fig. 6); castor wheel bearings (Fig. 5 & 6); blade spindle bearings (Fig. 7) and right and left ball joints (Fig. 7).

2. Position the machine and cutting unit on a level surface and

lower the cutting unit. Remove the check plug from the side of the gear box (Fig. 8) and make sure lubricant is up to the bottom of the hole. If the level of lubricant is low, remove the fill plug on top of the gear case and add SAE 80-90 weight. gear lubrication until the level is up to the bottom of the hole in the side.



Figure 6

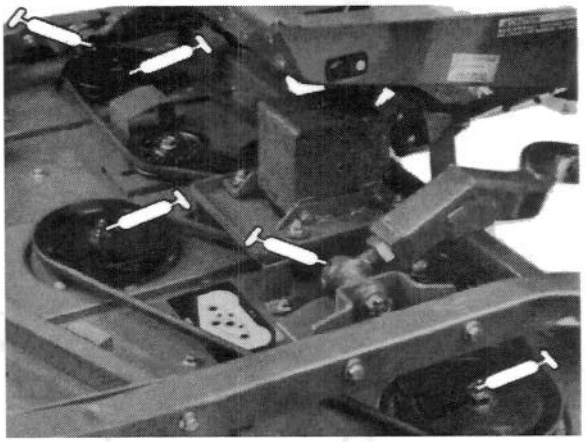

Figure 7

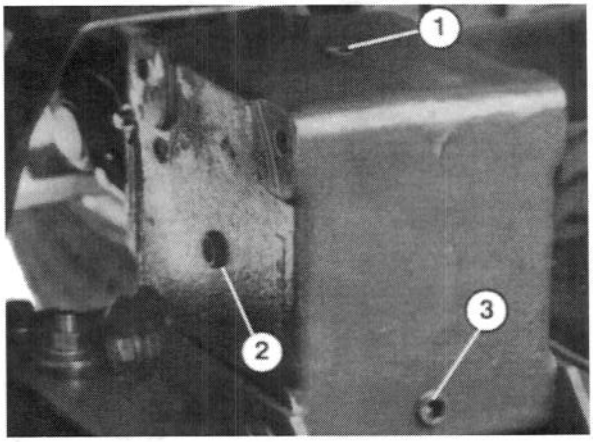

Figure 8

1. Filler plug
2. Check plug
3. Drain plug

UNIT WILL NOT CUT OR CUTS POORLY

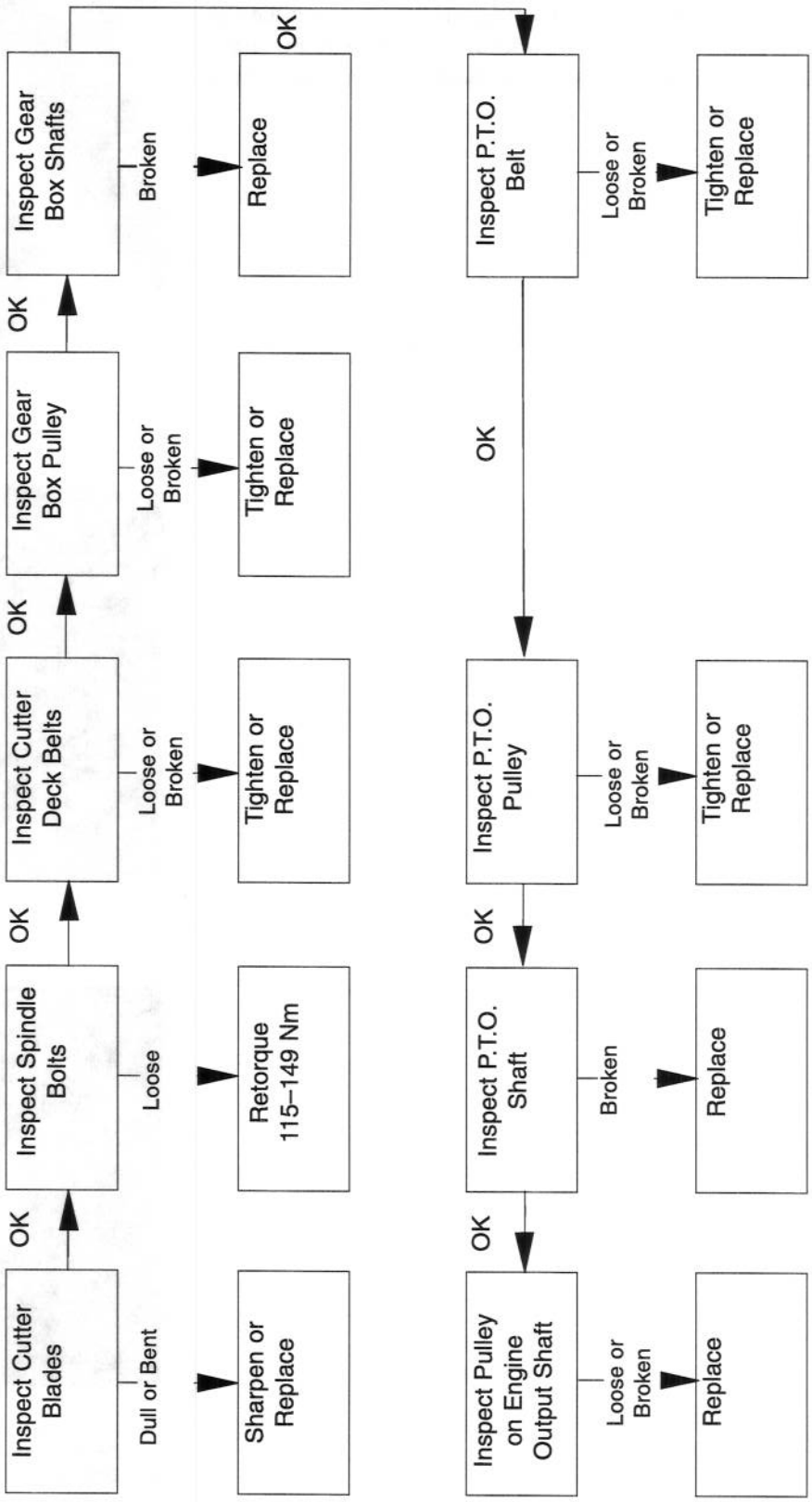

⚠ CAUTION

- Engine could start accidentally.
- Accidental starting of engine could cause serious injury to operator or bystanders.
- Shut engine off and remove key from ignition switch before performing any maintenance or adjustments

SEPARATING THE CUTTING UNIT FROM THE TRACTION UNIT (Fig 9–11)

1. Position the machine on level surface, lower the cutting unit to the floor, move the lift lever to the float position, shut the engine off and engage the parking brake.
2. Remove the capscrews, flatwashers and locknuts securing the ball joint mounts to the castor arms on the cutting unit.
3. Roll the cutting unit away from the traction unit separating male and female sections of the PTO shaft.

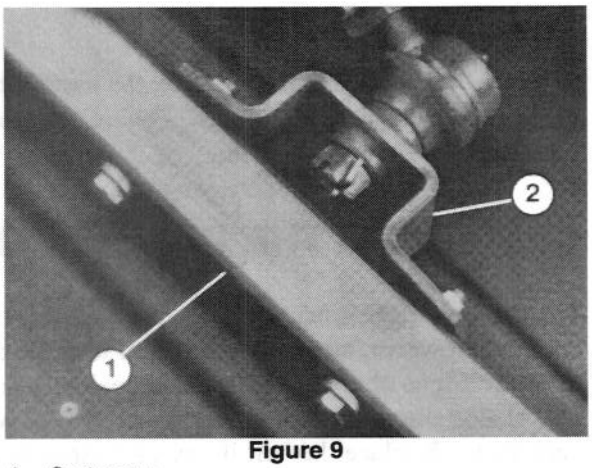

Figure 9

1. Castor arm
2. Ball joint mount

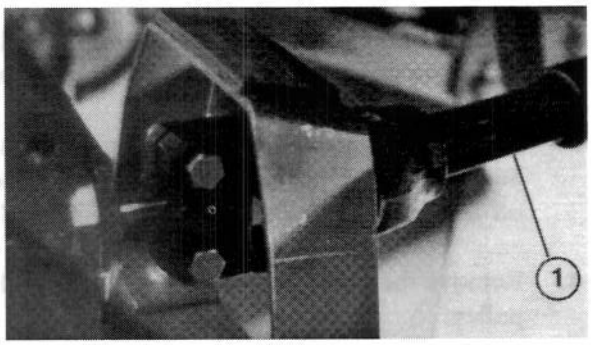

Figure 10

1. PTO Shaft

⚠ CAUTION

- Engine could start accidentally.
- Accidental starting of engine could cause serious injury to operator or bystanders.
- Shut engine off and remove key from ignition switch before performing any maintenance or adjustments

MOUNTING THE CUTTING UNIT TO THE TRACTION UNIT (Fig 9–10)

1. Position the machine on a level surface and shut the engine off.
2. Move the cutting unit into position in front of the traction unit.
3. Slide the male PTO shaft into the female PTO shaft.
4. Move the lift lever to the FLOAT position. Push the lift arms down until the holes in ball-joint mounts line up with the holes

in the castor arms.

5. Secure the ball-joint mounts to the castor arms with capscrews, flatwashers and flange nuts. Position the flatwashers to the outside of the castor arm.

REPLACING THE DRIVE BELT (Fig 11–13)

The blade drive belt, tensioned by the stationary idler pulley, is very durable. However, after many hours of use, the belt will show signs of wear. Signs of a worn belt are: squealing when the belt is rotating, blades slipping when cutting grass, frayed edges, burn marks and cracks. Replace the belt if any of these conditions are evident.

1. Lower the cutting unit to the shop floor. Remove the belt covers from the top of the cutting unit and set the covers aside.

2. Loosen the flange nut securing the idler pulley to the deck. Move the pulley away from the belt to release belt tension.

3. Remove the carriage bolts and flange nuts securing the gear box plate to the deck. Lift the gear box plate and the gear box off the deck and lay them on top of the deck.

4. Remove the old belt from around the spindle pulleys and idler pulley.

5. Route the new belt around the spindle pulleys and idler pulley assembly, as shown in Figure 13.

6. Reposition the gear box plate on the deck while routing the belt around the gear box pulley. Mount the gear box plate to the deck with carriage bolts and flange nuts previously removed.

7. Using approximately 50 lbs. of force, slide the idler pulley against the belt.

8. Hold the pulley in position and tighten the nut.

9. Reinstall the belt covers.

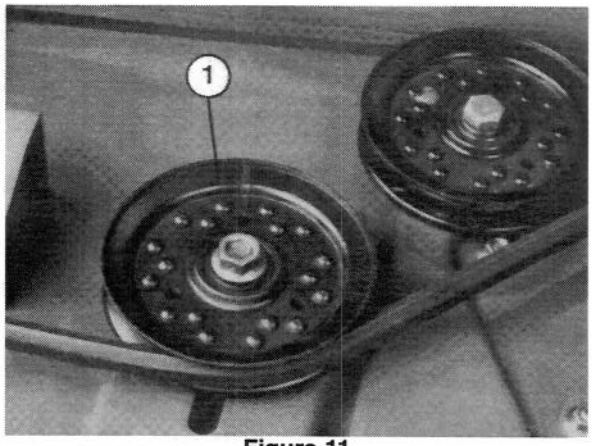

Figure 11

1. Idler pulley

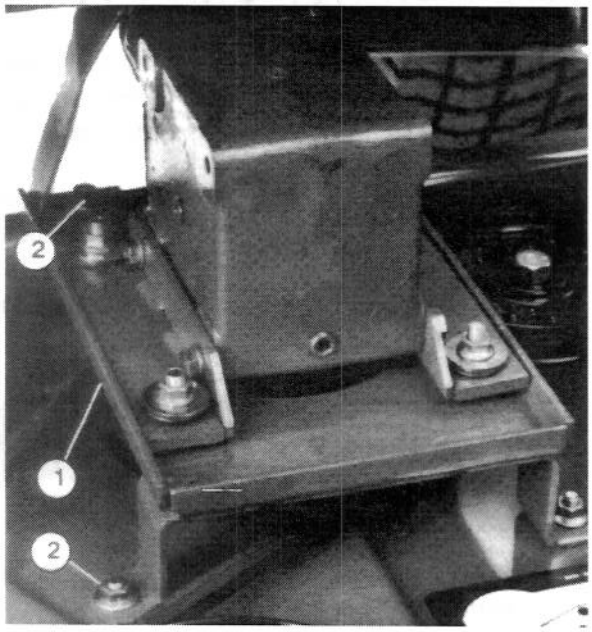

Figure 12

1. Gear box plate
2. Capscrews & nuts

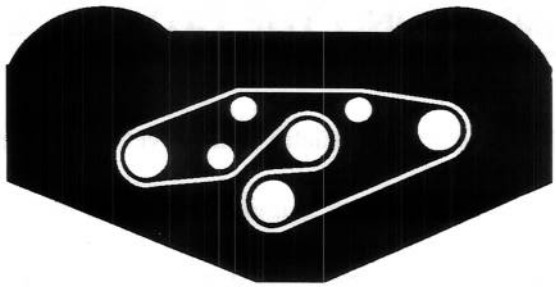

Figure 13
Belt Routing

SERVICING THE FRONT BUSHINGS IN THE CASTOR ARMS (Fig 14)

The castor arms have bushings pressed into the top and bottom of the tube and after many hours of operation, the bushings will wear. To check the bushings, move the castor fork back and forth and

from side to side. If the castor spindle is loose inside the bushings, bushings are worn and must be replaced.

1. Raise the cutting unit so its wheels are off the floor and block it so that it cannot fall accidentally.

2. Remove the tensioning cap, spacer(s) and thrust washer from top of the castor spindle.

3. Pull the castor spindle out of the mounting tube. Allow the thrust washer and spacer(s) to remain on bottom of the spindle.

4. Insert a pin punch into the top or bottom of the mounting tube and drive the bushing out of the tube. Also drive the other bushing out of the tube. Clean inside the tubes to remove dirt.

5. Apply grease to the inside and outside of the new bushings. Using a hammer and flat plate, drive the bushings into the mounting tube.

6. Inspect the castor spindle for wear and replace it if damaged.

7. Push the castor spindle through the bushings and mounting tube. Slide the thrust washer and spacer(s) onto the spindle. Install the tensioning cap on the castor spindle to retain all parts in place.

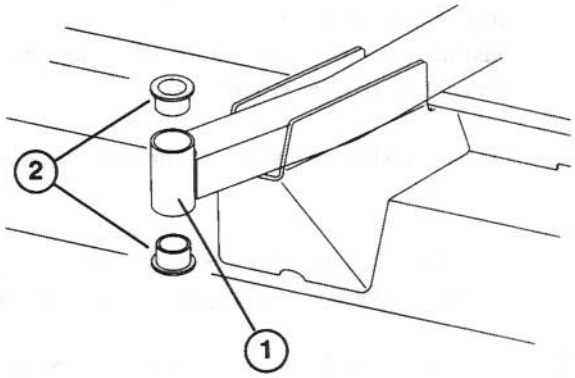

Figure 14

1. Front castor arm tube
2. Bushings

SERVICING THE CASTOR WHEELS AND BEARINGS (Fig. 15)

The castor wheel rotates on a high-quality roller bearing and is supported by a spanner bushing. Even after many hours of use, provided that the bearing was kept well-lubricated, bearing wear will be minimal. However, failure to keep the bearing lubricated will cause rapid wear. A wobbly castor wheel usually indicates a worn bearing.

1. Remove the locknut from the capscrew holding the castor wheel assembly between the castor fork. Grasp the castor wheel and slide the capscrew out of the fork.

2. Pull the spanner bushing out of the wheel hub.

3. Remove the bushing from the wheel hub and allow the bearing to fall out. Remove the bushing from the opposite side of the wheel hub.

4. Check the bearing, spanner and inside of the wheel hub for wear. Replace defective parts.

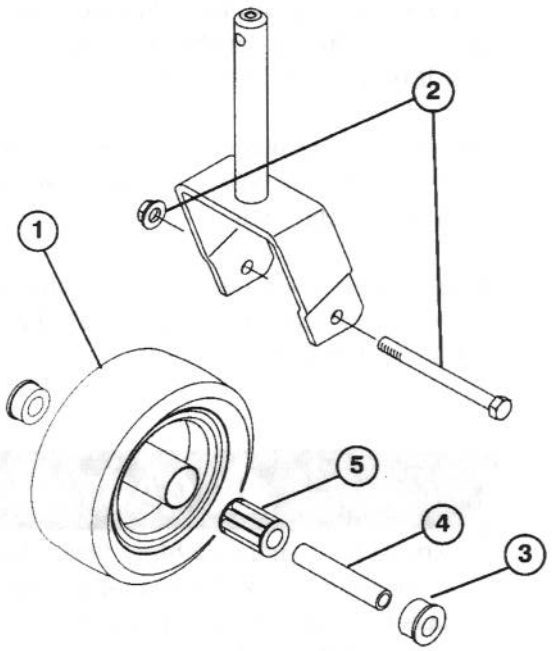

Figure 15

1. Castor wheel
2. Capscrew & locknut
3. Bushing (2)
4. Spanner bushing
5. Roller bearing

5. To assemble the castor wheel, push the bushing into wheel hub. Slide the bearing into the wheel hub. Push the other bushing into the open end of the wheel hub to captivate the bearing inside the wheel hub.

6. Carefully slide the spanner through the bushings and the wheel hub.

7. Install the castor wheel assembly between the castor fork and secure in place with a capscrew and locknut.

8. Lubricate the castor wheel bearing through the grease fitting, using No. 2 general purpose lithium base grease.

REMOVING THE CUTTER BLADE (Fig 16)

The blade must be replaced if a solid object is hit, the blade is out-of-balance or if the blade is bent. Always use genuine TORO replacement blades to be sure of safety and optimum performance. Never use replacement blades made by other manufacturers because they could be dangerous.

1. Raise the cutting unit to highest position, shut the engine off and engage the parking brake. Block the cutting unit to prevent it from falling accidentally.

2. Grasp the end of blade using a rag or thickly padded glove. Remove the blade bolt, lockwasher, anti-scalp cup and blade from the spindle shaft.

3. Install the blade–sail facing toward the cutting unit with an anti-scalp cup, lockwasher and blade bolt. Tighten the blade bolt to 85-110 ft-lb.

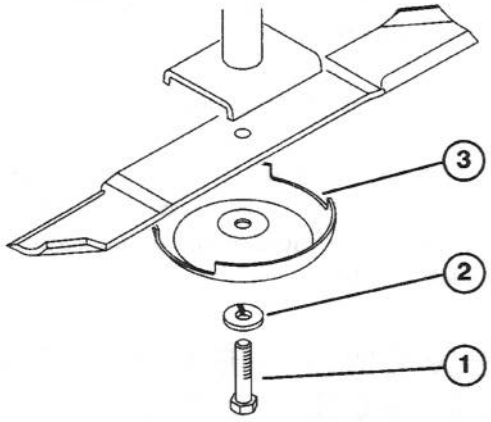

Figure 16

1. Blade bolt
2. Lockwasher
3. Anti-scalp cup

⚠ CAUTION

- Trying to straighten a blade that is bent or welding a broken or cracked blade may result in serious personal injury and/or discontinued safety certification of the product
- Do not try to straighten a blade that is bent, and never weld a broken or cracked blade.
- Always replace a damaged blade

INSPECTING AND SHARPENING THE BLADE (Fig 17–18)

1. Raise the cutting unit to its highest position, shut the engine off and engage the parking brake. Block the cutting unit to prevent it from falling accidentally.

2. Examine the cutting ends of the blade carefully, especially where the flat and curved parts of the blade meet (Fig. 17 A). Since sand and abrasive material can wear away the metal that connects the flat and curved parts of the blade, check the blade before using the machine. If wear is noticed (Fig. 17 B), replace the blade: refer to *Removing The Cutter Blade.*

3. Inspect the cutting edges of all blades. Sharpen the cutting edges if they are dull or nicked. Sharpen only the top of the cutting edge and maintain the original cutting angle to make sure of sharpness (Fig. 18). The blade will remain balanced if the same amount of metal is removed from both cutting edges.

4. To check the blade for being straight and parallel, lay the blade on a level surface and check its ends. Ends of the blade must be slightly lower than the center, and the cutting edge must be lower than the heel of the blade. This blade will produce good quality of cut and require minimal power from the engine. By contrast, a blade that is higher at the ends than the center, or if the cutting edge is higher than the heel, the blade is bent or warped and must be replaced.

5. Install the blade–sail facing toward the cutting unit with the anti-scalp cup, lockwasher and blade bolt. Tighten the blade bolt to 115-149 Nm.

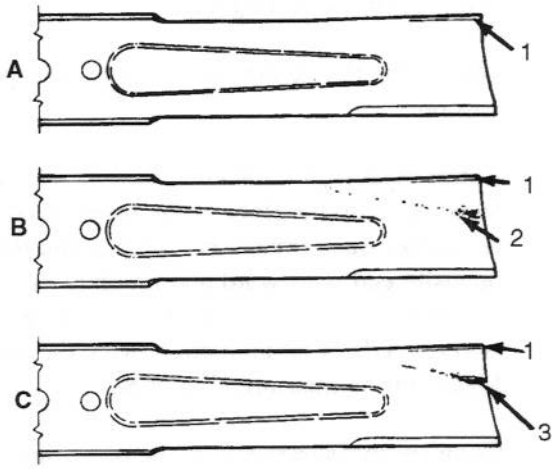

Figure 17

1. Sail
2. Wear
3. Slot formed

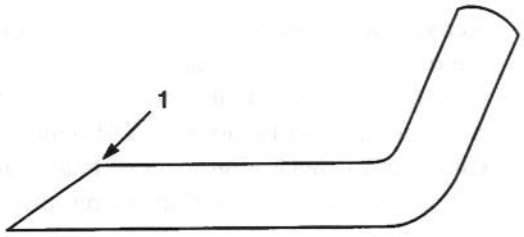

Figure 18

1. Sharpen at this angle only

CORRECTING THE CUTTING UNIT MISMATCH

If there is mismatch between the blades, the grass will appear streaked when it is cut. This problem can be corrected by making sure the blades are straight and all blades are cutting on the same plane.

1. Using a 3-foot long carpenters level, find a level surface on the shop floor.

2. Raise the height of cut to the highest position: refer to *Adjusting The Height-Of-Cut.*

3. Lower the cutting unit onto flat surface. Remove the covers

from top of the cutting unit.

4. Loosen the flange nut securing the idler pulley to release belt tension.

5. Rotate blades until the ends face forward and backward. Measure from the floor to the front tip of the cutting edge and remember this dimension. Then rotate the same blade so its opposite end is forward and measure again. The difference between dimensions must not exceed 1/8 of an inch. If dimension exceeds 1/8 of an inch, replace the blade because it is bent. Make sure to measure all blades.

6. Compare measurements of the outer blades with the center blade. the center blade must not be more than 3/8 of an inch lower than the outer blades. If the center blade is more than 3/8 of an inch lower than the outer blades, go to step 7 and add shims between the spindle housing and bottom of the cutting unit.

7. Remove the capscrews, flatwashers, lockwashers and nuts from the outer spindle in the area where shims must be added. To raise or lower the blade, add a shim, Part No. 3256-24, between the spindle housing and bottom of the cutting unit. Continue to check alignment of blades and add shims until the tips of the blades are within the required dimension.

   IMPORTANT: Do not use more than three shims at any one hole location. Use decreasing numbers of shims in adjacent holes if more than one shim is added to any one hole location.

8. Readjust the idler pulley. Reinstall the belt covers.

IDENTIFICATION AND ORDERING

MODEL AND SERIAL NUMBERS

The cutting deck has two identification numbers: a model number and a serial number. The two numbers are stamped into a plate located on the left rear hanger bracket of the mower deck. In any correspondence concerning the mower, supply the model and serial numbers to assure that correct information and replacement parts are obtained.

To order replacement parts from an authorized TORO Distributor, supply the following information:

1. Model and serial numbers of the machine.

2. Part number, description and quantity of parts desired.

   Note: Do not order by reference number if a parts catalog is being used; use the part number.