FORM NO. 3317-455 UK

TORO®

Model No. 03752—50001 & UP
Model No. 03753—50001 & UP
Model No. 03754—50001 & UP

OPERATOR'S MANUAL

REELMASTER® 3500/4500
5-, 7- & 11-BLADE CUTTING UNITS

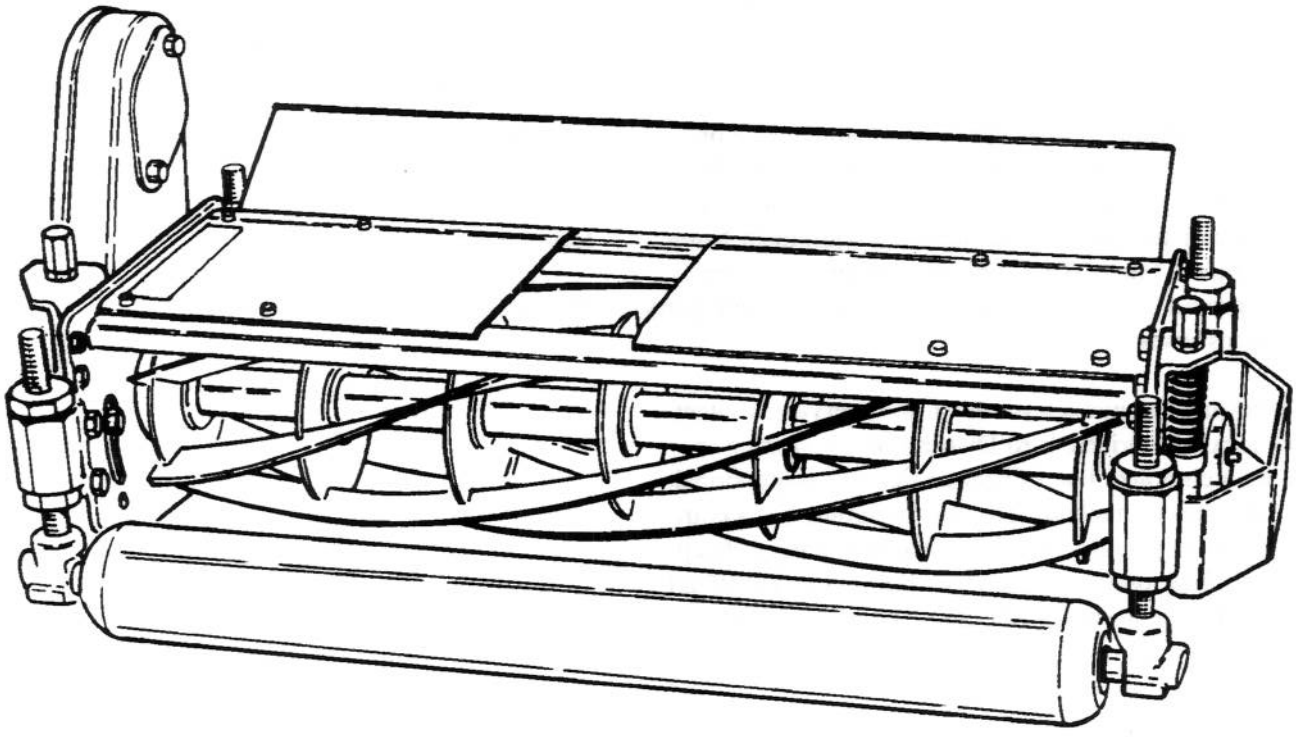

© The TORO COMPANY—1995

FOREWORD

The cutting unit's have advanced concepts in engineering, design and safety; and if maintained properly, they will give excellent service.

Since the cutting unit's are high quality products, Toro is concerned about the future use of them and the safety of the user. Read this manual to familiarize yourself with the proper set up, adjustment and maintenance instructions. The major sections of this manual are:

Certain information in this manual is emphasized. DANGER, WARNING and CAUTION identify personal safety related information. IMPORTANT identifies mechanical information demanding special attention. Be sure to read the directive because it deals with the possibility of damaging a part or parts of the machine. NOTE identifies general information worthy of special attention.

If help concerning set up, operation, maintenance or safety is ever needed, contact a local Authorized Toro Distributor. In addition to genuine Toro replacement parts, the distributor also has optional equipment from the complete line of Toro turf care equipment. Keep your Toro all Toro – buy genuine Toro replacement parts and accessories.

Whenever you have questions or need service, contact your local authorized Toro Distributor. In addition to having a complete line of accessories and professional turf care service technicians, the distributor has a complete line of genuine TORO replacement parts to keep your machine operating properly. Keep your TORO all TORO. Buy genuine TORO parts and accessories.

TABLE OF CONTENTS

Symbol Glossary	3
Specifications	4
Cutting Unit—Overview	5
Cutting Unit Adjustment	5
Adjusting Reel To-Bedknife-Contact	5
Height-of-Cut Adjustment—Floating Cutting Unit	6
Quick Method For Changing Height of Cut	8
Height-of-Cut Adjustment—Fixed Cutting Unit	8
Adjusting Skids And Front Rolle (Fixed Head)	8
Lubrication	10
Product Identification	11

Specifications

Construction: Welded steel frame and reel with heavy-duty, self-aligning ball bearings. Heavy-duty steel rear roller with tapered roller bearings. Rear roller and bedbar are isolated and mounted in rubber bushings for quiet, vibration-free operation. Adjustable deflector shields are standard. Stainless steel components are used at key points for added durability.

Reel Configuration: The 5-, 7- and 11-blade, heavy-duty welded reels all have 8 in. (20.3 cm) diameters and are 29-3/4 in. (75.5 cm) wide.

Bedknife/Bedbar Assembly: A replaceable, single-edged, alloy steel bedbar is induction hardened. It's fastened with steel screws to a precision ground surface on the high-strength, fabricated steel bedbar. The stress-relieved machined bedbar is mounted with four (4) vibration isolation bushings.

Bedknife to Reel Adjustment: Two lockable lead screw adjusters at each side of the frame adjust the reel-to-bedknife contact.

Rear Roller: 3-1/2 in. (89 mm) diameter steel roller has greaseable tapered roller bearings. A double lip oil seal and wear sleeve isolates grit and moisture from the bearings.

Height-of-Cut:
5 Blade—1 to 3 in. (25 to 76 mm).
7 Blade—1/2 to 1-3/4 in. (9.5 to 45 mm).
11 Blade—3/8 to 3/4 in. (9.5 to 19 mm).

Height-of-Cut Adjustment: Quick adjustment and positive locking is provided by locking type cone nuts. Gauge marks of 1/4 in. (6.3 mm) are provided as a reference for easy changes of height-of-cut.

Lubrication: Easily accessible grease fittings for bearings and all major pivot points.

Drive: The reel drive motor turns a maintenance-free cog belt which drives the reel. Drive pulley and cog belt are encased in a drive housing for safety and protection from contamination.

Grass Deflector Shields: Fully Adjustable.

Clip (variable to match cutting conditions):

5-Blade Cutting Unit: 0.176 in. per mph (0.352 in. at 2 mph–1.32 in. at 7.5 mph)

7-Blade Cutting Unit:126 in. per mph (0.252 in. at 2 mph–0.945 in. at 7.5 mph)

11-Blade Cutting Unit: .080 in. per mph (0.16 in. at 2 mph–0.600 in. at 7.5 mph)

Cutting Unit—Overview

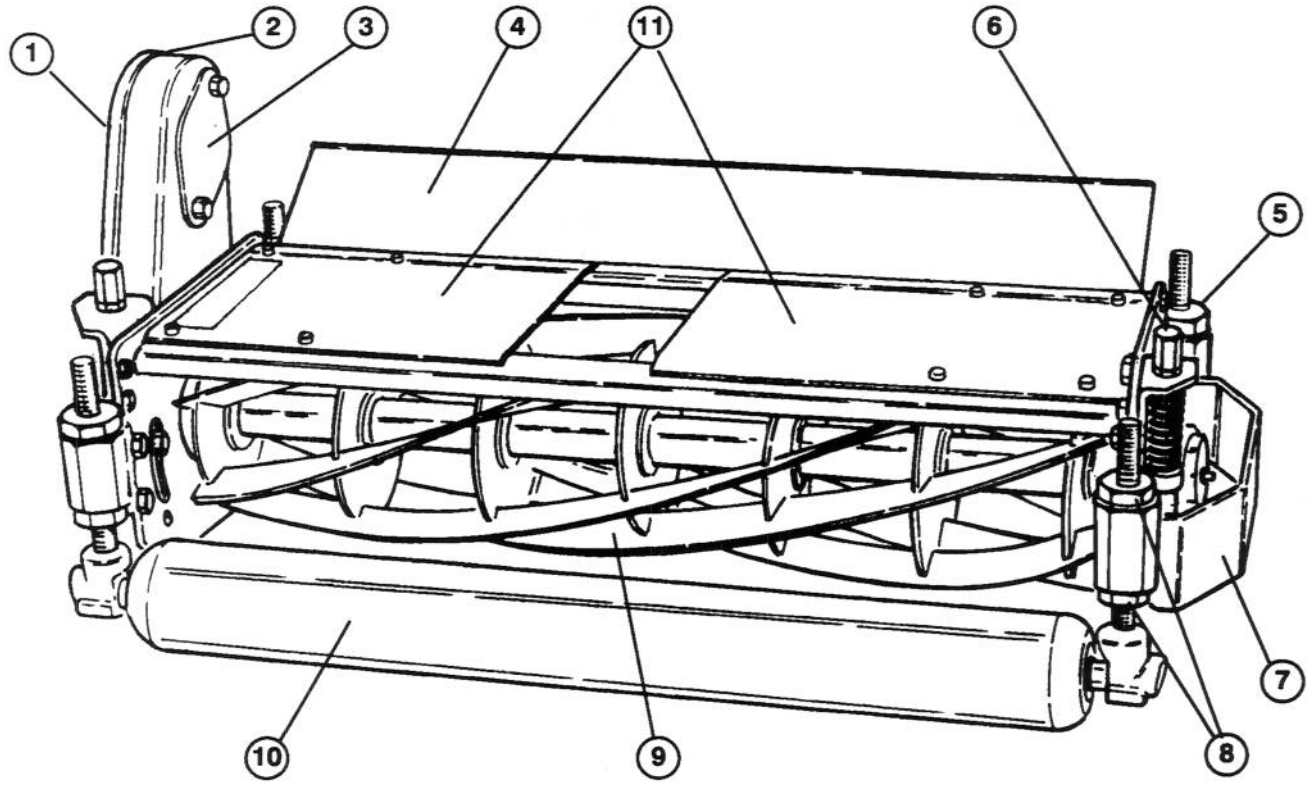

1. Drive housing cover
2. Drive housing
3. Drive plate shield & shipping cover
4. Grass deflector
5. Rear roller adjuster (2)
6. Reel-to-bedknife adjuster
7. Guard
8. Cone nut
9. Reel assembly
10. Front roller (optional)
11. Top Covers
11. Top covers

Cutting Unit Adjustments

IMPORTANT: Thoroughly read both Cutting Unit and Traction Unit operator manuals. Failure to do so may result in damage to the cutting unit and/or poor performance.

Note: Reference to the left and right side of the cutting unit is made from the operator's perspective as if the operator were seated on the machine and the unit were in normal operation.

ADJUSTING REEL-TO-BEDKNIFE CONTACT

⚠ CAUTION

If the engine has been running, pressurized hot coolant can escape and cause burns when the radiator cap is removed.

Before adjusting height of cut and each day before operating, check reel-to-bedknife contact.

Note: A 3/4-inch wrench is required for making the reel-to-bedknife adjustment.

A. Slowly and carefully rotate the reel, listening for light contact across the full length of the reel and bedknife.

B. If no there is no contact, loosen the adjuster locking nut on each adjuster (Fig. 1). Then, equally turn each adjuster knob clockwise until light contact is felt and heard.

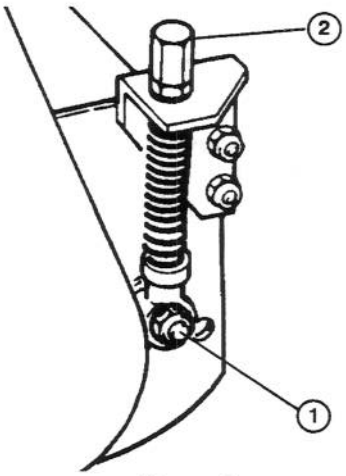

Figure 1

1. Adjuster locking nut
2. Adjustment knob

C. If there is excessive contact, turn the adjusting knobs counter-clockwise until no contact is noticed. Then equally turn both adjusting knobs clockwise, until light contact is felt and heard between the reel and bedknife. Final adjustment should always be in the tightening (clockwise) direction.

D. Tighten the adjuster locking nuts when your have completed adjustments.

⚠ CAUTION

When adjusting the cutting units, wear heavy gloves and use care when turning the reels by hand. Sharp edges can cut or pinch your hands or fingers.

IMPORTANT: Adjusted correctly, the reel will cut paper (approximately. .03" thick) across its entire length.

The cutting units will provide optimum mowing performance when adjusted and maintained correctly. Keeping a precise reel-to-bedknife adjustment (light contact), at each end of the cutting unit will produce a continual self-sharpening action, assuring good quality of cut, and reducing the need for corrective resharpening.

IMPORTANT: Cutting units with excessive contact between the reel and bedknife are noisy, consume excessive power, shorten component life and result in overall poor performance. Light contact between the reel and bedknife, once the cutting unit is warmed up, provides optimum mowing performance and component life.

HEIGHT-OF-CUT ADJUSTMENT FOR A FLOATING CUTTING UNIT

Overview of Procedure:

STEP 1—Adjust reel-to-bedknife contact
STEP 2—Level the rear roller to the reel
STEP 3—Adjust final height-of-cut using a gauge bar.

STEP 1—Adjust Reel-to-bedknife Contact

Adjust reel-to-bedknife contact on all cutting units. Refer to ADJUSTING REEL-TO-BEDKNIFE CONTACT.

STEP 2—Level the Rear Roller to the Reel

- Start the engine and lower the cutting units onto a flat surface such as a piece of 2.5 cm plywood (at least 50 cm x 70 cm in size). Stop the engine and remove the key from the switch. Lock the cutting units in the fixed position by loosening the jam nut on lockout pin (Fig. 2) and screwing the pin into the hole in pivot arm (Fig. 3). Tighten the nut. Raise the front rollers up so they do not contact the flat surface.

- Insert a piece of bar stock 70 cm long (Fig. 4), and approximately 3 mm thicker than the desired height-of-cut, under the reel and up against the bedknife cutting edge (Fig. 4). The reel (not bedknife)

must contact the bar stock along its full length.

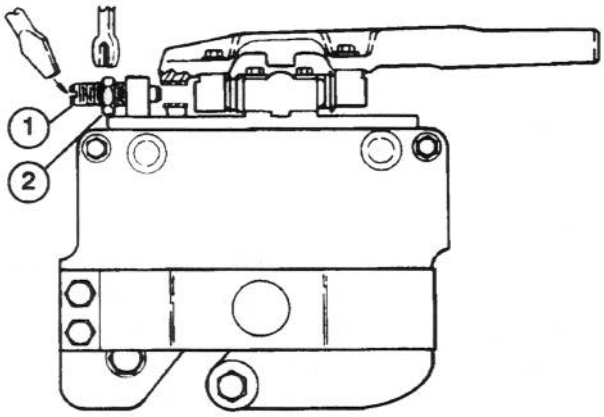

Figure 2
Cutting Unit Float Position

1. Lockout pin
2. Jam nut

Note: Using a bar 3 mm thicker than height-of-cut provides proper bedknife attitude (heeled ''up" in back) required for excellent low height-of-cut performance.

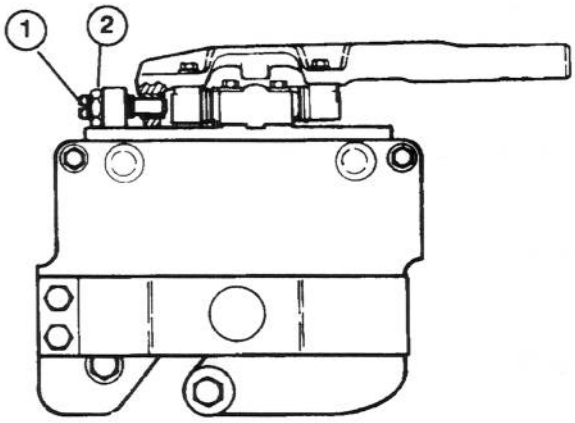

Figure 3
Cutting Unit Fixed Position

1. Lockout pin
2. Jam nut

- Loosen the rear roller jam nuts and adjusting knobs and push the roller down against the flat surface. At this point, the reel should contact the bar stock and the rear roller should contact the flat surface. Contact should exist along the entire length of the reel and rear roller. Tighten the rear roller adjustment knobs and jam nuts. Recheck to be sure the roller and reel are both still making contact after the jam nuts have been tightened. Check roller contact by trying to slide paper between the roller and the flat surface.

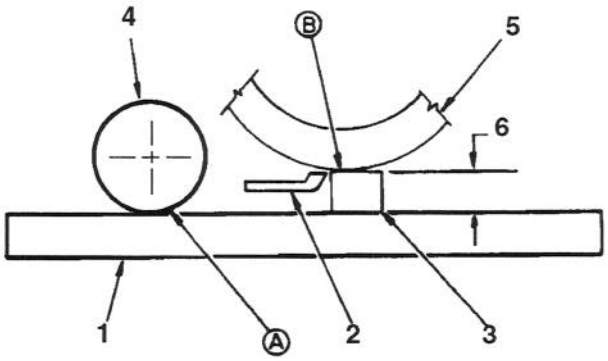

Figure 4
Contact alone the full length at "A" and "B" levels levels the rear roller to the reel.

1. Flat surface
2. Bedknife
3. Bar stock
4. Rear roller
5. Reel
6. Height of cut + 3 mm

- The rear roller is now leveled to the reel.

STEP 3—Final Height-of-Cut Adjustment Using a Gauge Bar

- Raise the cutting units and lock them in the transport position. Shut off the engine and remove the key.
- Use the gauge bar (Toro Part No. 59-7900) to set final height-of-cut by adjusting the front roller only.
- Loosen the gauge bar jam nut and adjust the screw to set the dimension between the underside of the screw head and gauge bar for desired height-of-cut. (Fig. 5). Tighten the jam nut to secure the adjustment. Hook the screw head over the cutting edge of the bedknife and position the bar against the bottom of the front roller (Fig. 6).
- Loosen the front roller nuts and adjust both ends of the front roller until it contacts the gauge bar at both ends. With the gauge bar held firmly against the bottom of the rollers, adjust the front roller so the screw head just slips over the lip of the bed-

knife (Fig. 6). Tighten the front roller nuts.

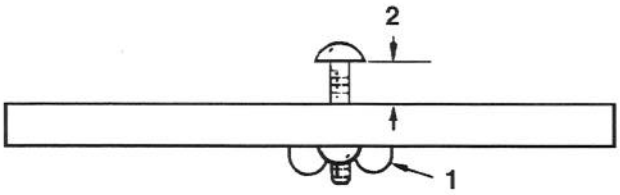

Figure 5
Contact alone the full length at "A" and "B" levels levels the rear roller to the reel.
1. Jam nut
2. Adjust for final height-of-cut setting

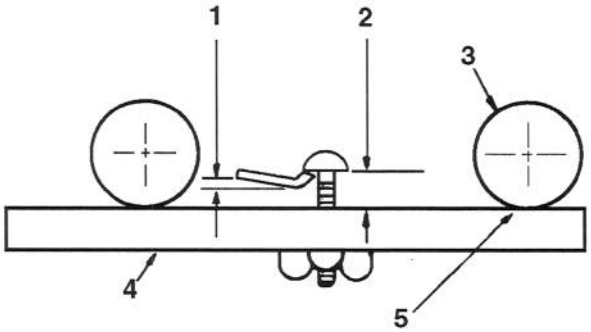

Figure 6
Final Height-of-cut Adjustment Using a Gauge Bar
1. Approximately 3 mm heel up
2. Final height of cut setting
3. Front roller
4. Gauge bar assembly
5. Adjust front roller to contact gauge bar

IMPORTANT: Set properly, front and rear rollers will contact the gauge bar and the screw head will be snug over the bedknife cutting edge when checked at both ends of the reel.

- Loosen the lockout pin so the cutting unit can float freely (Fig. 2).

QUICK METHOD FOR CHANGING HEIGHT-OF-CUT AFTER INITIAL SET UP OF A FLOATING CUTTING UNIT

If the reel-to-bedknife adjustment has been set (Step 1) and the rear roller leveled to the reel (Step 2) the cutting unit may be quickly changed from one height-of-cut to another by using the gauge bar (Part #59-7900) and adjusting the front roller only.

In many cases, an entire machine can be done quickly by using the gauge bar to set the front roller of one cutting unit. The remaining cutting units can then be set by loosening their front roller jam nuts and turning each front roller adjustment knob the same number of turns and in the same direction as the first unit.

HEIGHT-OF-CUT ADJUSTMENT FOR A FIXED CUTTING UNIT

A. Adjust reel-to-bedknife contact.

B. Loosen nuts securing the skids or front roller and raise it to its highest position.

C. Loosen jam nuts securing the rear roller. Lower the roller beyond the desired height-of-cut (for proper bedknife attitude).

D. Lower the cutting unit onto a flat surface, such as a 50 x 70 cm piece of plywood. Shut off the engine and remove the key.

E. Insert piece of bar stock (Fig. 4) 70 cm long with thickness equal to desired height-of-cut, under the entire length of the reel, next to the bedknife.

F. Adjust the rear roller adjustment knobs and jam nuts until the full length of the rear roller contacts the flat surface and the full length of the reel (not bedknife) contacts the bar stock. Tighten the rear roller knobs and jam nuts.

ADJUSTING SKIDS AND FRONT ROLLER (Fixed Head Kit)

After the skid kit or front rollers are installed (installation instructions are included with each option) make the following adjustments to prevent them from pushing down uncut grass or scalping on undulating terrain:

1. Lock each cutting unit in the fixed position (Refer to Cutting Unit Orientation, Fig. 1). Set the reel-to-

bedknife adjustment and height-of-cut adjustment.

2. Position the cutting units on a flat, level surface 25 mm thick piece of plywood).

3. Skids and front rollers used to prevent scalping should not ride on the ground. Adjust each skid or front roller so it is 3–6 mm or higher above the level surface. Allow greater clearance at the higher height-of-cut settings.

4. Proper adjustment is achieved when the cutting unit does not scalp the grass in normal mowing conditions and yet is set high enough not to mar the turf and create undue wear on the skids or rollers.

Note: Skids are used only with the cutting unit in the fixed position. Front rollers may be used with the cutting unit in either the fixed or floating position.

Lubrications

Before and after greasing, wipe each grease fitting with a clean rag. Use a hand-operated grease gun and #2 general purpose grease to lubricate the eight grease fittings. Applying too much pressure will ruin the seals and leaking grease could cause damage to grass.

IMPORTANT: Before washing the machine, shut off the engine and remove the key. Toro recommends daily lubrication of reels and rollers immediately after washing the machine. This helps to minimize water entering the reel and roller bearings.

If the cutting units are washed in the raised position, be sure to lower them to the ground after washing. This allows water to drain from the ends of the rollers and reel bearing housings.

1. **Reel shaft and Roller Bearings**—Lubricate bearings with 3 or 4 pumps of grease. Daily lubrication of these fittings purges water and other contaminants, increasing service life and maintaining excellent quality-of-cut.

   Note: When greasing roller bearings, grease forced from bearings will not be visible around the roller shaft.

2. Floatation Kit Pivots and Fixed Head Kit Pivots—Lubricate with one pump of grease weekly.

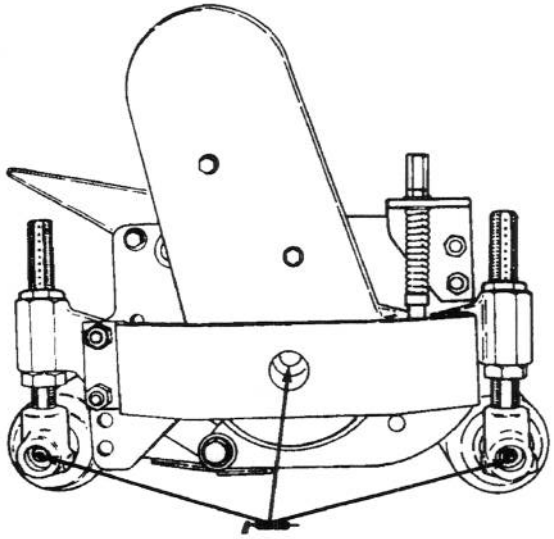

Figure 7

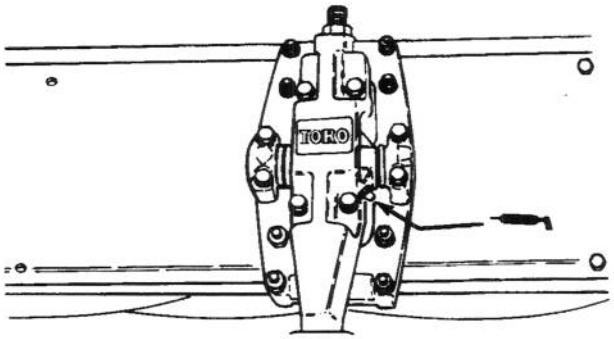

Figure 8

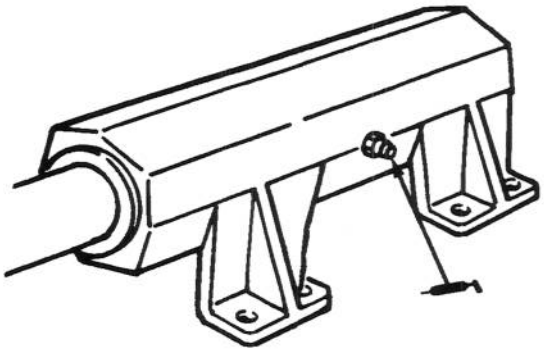

Figure 9

PRODUCT IDENTIFICATION

The cutting unit has two identification numbers: a model number and a serial number that are stamped into a plate. The identification plate is located on the reel side plate opposite drive housing. In any correspondence concerning the traction unit, supply the model and serial numbers to ensure correct information and replacement parts are obtained.

To order replacement parts from an Authorized TORO Distributor supply the following information:

1. Model and serial numbers of the traction unit.

2. Part number, description and quantity of parts desired.

   Note: Do not order by reference number if a parts catalog is being used; use the part number.