FORM NO. 3317-462 UK

TORO®

MODEL NO. 30555—50001 & UP

OPERATOR'S MANUAL

52" SIDE DISCHARGE CUTTING DECK



© The TORO Company 1995

FOREWORD

FOREWORD

The 62" cutting deck has advanced concepts in engineering, design and safety; and if maintained properly, will give excellent service.



Certain information in this manual is emphasized. DANGER, WARNING and CAUTION identify personal safety related information. IMPORTANT identifies mechanical information demanding special attention. Be sure to read this directive because it deals with the possibility of damaging a part or parts of the machine. NOTE identifies general information worthy of special attention.

Table of Contents

	Page
PECIFICATIONS	6
BEFORE OPERATING	11
Adjusting Height-of-Cut	11
Adjusting The rollers	11
Adjust Skid	11
Check Lubricant In The gear Box	11
OPERATING INSTRUCTIONS	12
Grass Deflector	12
Tension Spring Adjustment	12
LUBRICATION	13
Grease Bearings And Bushings	13
MAINTENANCE	14-21
Trouble Shooting	14
Separating Cutting Unit From The traction Unit	15
PTO Shaft Removal	15
Servicing Bushings in The castor Arms	15
Servicing The castor Wheel and Bearing	16
Checking for Bent Blade	16
Replacing Cutter Blade	17
Checking Sail and Sharpening Cutter Blade	17
Correcting Cutting Unit Mismatch	18
Replacing Grass Deflector	19
Adjusting Cover Latches	19
Adjusting Idler Pulley	19
Replacing Drive Belt	19
IDENTIFICATION AND ORDERING	22
MAINTENANCE CHART	22-23

Safety

Training

1. Read the instructions carefully. Be familiar with the controls and the proper use of the equipment.

2. Never allow children or people unfamiliar with these instructions to use the lawnmower. Local regulations may restrict the age of the operator.

3. Never mow while people, especially children, or pets are nearby.

4. Keep in mind that the operator or user is responsible for accidents or hazards occurring to other people or their property.

5. Do not carry passengers.

6. All drivers should seek and obtain professional and practical instruction. Such instruction should emphasize:
   - the need for care and concentration when working with ride-on machines;
   - control of a ride on machine sliding on a slope will not be regained by the application of the brake. The main reasons for loss of control are:
     - insufficient wheel grip;
     - being driven too fast;
     - inadequate braking;
     - the type of machine is unsuitable for its task;
     - lack of awareness of the effects of ground conditions, especially slopes;

Preparation

1. While mowing, always wear substantial footwear and long trousers. Do not operate the equipment when barefoot or wearing open sandals.

2. Thoroughly inspect the area where the equipment is to be used and remove all objects which may be thrown by the machine.

3. **WARNING—Petrol is highly flammable.**
   - Store fuel in containers specifically designed for this purpose.
   - Refuel outdoors only and do not smoke while refueling.
   - Add fuel before starting the engine. Never remove the cap of the fuel tank or add petrol while the engine is running or when the engine is hot.
   - If petrol is spilled, do not attempt to start the engine but move the machine away from the are of spillage and avoid creating any source of ignition until petrol vapors have dissipated.
   - Replace all fuel tanks and container caps securely.

4. Replace faulty silencers.

5. Before using, always visually inspect to see that the blades, blade bolts and cutter assembly are not worn or damaged. Replace worn or damaged blades and bolts in sets to preserve balance.

6. On multi-bladed machines, take care as rotating one blade can cause other blades to rotate.

Operation

1. Do not operate the engine in a confined space where dangerous carbon monoxide fumes can collect.

2. Mow only in daylight or in good artificial light.

3. Before attempting to start the engine, disengage all blade attachment clutches and shift into neutral.

4. Do not use on slopes of more than:
   - Never mow side hills over 5°
   - Never mow uphill over 10°
   - Never mow downhill over 15°

5. Remember there is no such thing as a "safe" slope.

Travel on grass slopes requires particular care. To guard against overturning:

- do not stop or start suddenly when going up or downhill;
- engage clutch slowly, always keep machine in gear, especially when travailing downhill;
- machine speeds should be kept low on slopes and during tight turns;
- stay alert for bumps and hollows and other hidden hazards;
- never mow across the face of the slope, unless the lawnmower is designed for this purpose.

6. Use care when pulling loads or using heavy equipment.
   - Use only approved drawbar hitch points.
   - Limit loads to those you can safely control.
   - Do not turn sharply. Use care when reversing.
   - Use counterweight(s) or wheel weights when suggested in the instruction handbook .
7. Watch out for traffic when crossing or near roadways.
8. Stop the blades rotating before crossing surfaces other than grass.
9. When using any attachments, never direct discharge of material toward bystanders nor allow anyone near the machine while in operation .
10. Never operate the lawnmower with defective guards, shields or without safety protective devices in place.
11. Do not change the engine governor settings or overspeed the engine. Operating the engine at excessive speeds may increase the hazard of personal injury.
12. Before leaving the operator's position:
    - disengage the power take-off and lower the attachments;
    - change into neutral and set the parking brake;
    - stop the engine and remove the key.
13. Disengage drive to attachments, stop the engine, and disconnect the spark plug wire(s)or remove the ignition key
    - before cleaning blockages or unclogging chute;
    - before checking, cleaning or working on the lawnmower;
    - after striking a foreign object. Inspect the lawnmower for damage and make repairs before restarting and operating the equipment;
    - if the machine starts to vibrate abnormally (check immediately).
14. Disengage drive to attachments when transporting or not in use.
15. Stop the engine and disengage drive to attachment
    - before refueling;
    - before removing the grass catcher;
    - before making height adjustment unless adjustment can be made from the operator's position.
16. Reduce the throttle setting during engine runout and, if the engine is provided with a shutoff valve, turn the fuel off at the conclusion of mowing.

Maintenance and Storage

1. Keep all nuts, bolts and screws tight to be sure the equipment is in safe working condition.
2. Never store the equipment with petrol in the tank inside a building where fumes may reach an open flame or spark.
3. Allow the engine to cool before storing in any enclosure.
4. To reduce the fire hazard, keep the engine, silencer, battery compartment and petrol storage area free of grass, leaves, or excessive grease.
5. Check the grass catcher frequently for wear or deterioration.
6. Replace worn or damaged parts for safety.

7. If the fuel tank has to be drained, this should be done outdoors

8. On multi-bladed machines, take care as rotating one blade can cause other blades to rotate.

9. When machine is to be parked, stored or left unattended, lower the cutting means unless a positive mechanical lock is used.

Symbol Glossary

Safety alert symbol



Safety alert symbol



Read operator's manual



Consult technical manual for proper service procedures



Thrown or flying objects—whole body exposure



Thrown or flying objects—rotary side-mounted mower. Keep deflector shield in place.



Severing toes or foot—mower blade



Severing fingers or hand—mower blade



Rotating blade can cut off toes or fingers. Stay clear of blade as long as the engine is running.



Do not open or remove safety shields while the engine is running.



Dismemberment—Mower in rearward position.



Stay a safe distance from the machine.

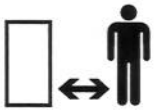

Stay a safe distance from the mower.



Keep children a safe distance from the machine.



Machine rollover—side hill



Machine rollover—up hill



Machine rollover—down hill



Machine rollover—roll over protection system



Fast



Slow



Decreasing/increasing



On/Run

Off/Stop



Engine



Engine start



Engine stop



Choke



Engine temperature



Engine lubricating oil pressure



Engine lubricating oil pressure

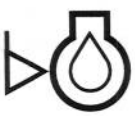

Fuel



Fuel level

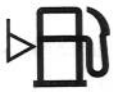

Volume empty



Volume full



Battery charging condition

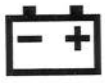

Head lights—Main/high beam



Brake system



Parking brake



Clutch



PTO (Power Take Off)



Engage

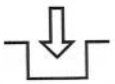

Disengage

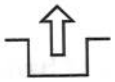

Unlock



Lock



Cutting element—basic symbol



Cutting element—height adjustment



Cutting unit—lower



Cutting unit—raised

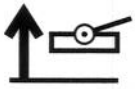

Cutting or entanglement of foot—rotating auger



Severing of fingers or hand—impeller blade



Keep a safe distance from snowthrower.



Stay a safe distance from snowthrower.



Tractors must be equipped with 45 kg rear wheel weight with this attachment installed.



Machine rollover protection system snowthrower



Severing of hand—rotating knives



Severing of foot—rotating knives



Riding on this machine is allowed only on a passenger seat and only if the driver's view is not hindered.



Crushing of fingers or hands—force applied from the side



Kickback or upward motion—stored energy



Shut off engine and remove key before performing maintenance or repair work.



Machine travel direction—combined



Low — **L**

High — **H**

Reverse — **R**

Neutral — **N**

First gear — **1**

Second gear — **2**

Third gear up to a maximum number of forward gears. — **3**

Specifications

Height of Cut: Adjustable from 1" to 4" (25 to 102 mm) in 1/2" (13 mm) increments.

Blade Tip Speed: 264 ft/sec. @ 3250 engine rpm.

Cutter Blades: Three heat treated steel blades, each 3/16 in. (4.8 mm) thick and 21-1/2" (55 mm) long.

Pneumatic Wheels: 8 in. (203 mm) dia. with greaseable roller bearings. (Inflation 20-30 P.S.I.)

Unit Drive System: PTO driven gear box transmits power through a "AA" section belt to all blade spindles.

Before Operating

ADJUSTING HEIGHT-OF-CUT

The height-of-cut is adjustable from 25 to 102 mm in 13 mm increments by relocating four clevis pins in different hole locations to prevent any operating of the cutting unit.

Note: All four pins should be in identical hole locations to prevent any operating and cutting difficulties.

ADJUSTING THE ROLLERS

Note: If the cutting unit is to be used in 25 mm or 38 mm height-of-cut setting, the internal and external rear cutting unit rollers must be repositioned in the top bracket holes.

To adjust the rear external rollers:

1. Remove the nuts securing the rear rollers to the outside of the cutting unit (Fig. 1).

To adjust the rear internal rollers:

1. Remove the cotter pins securing the roller shafts to the underside of the deck (Fig. 2).

2. Slide the shafts out of lower bracket holes, align the rollers with top holes and install the shafts.

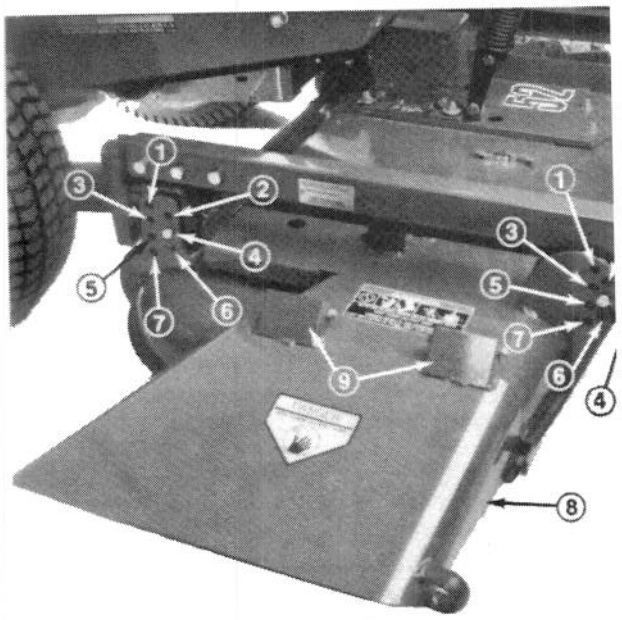

Figure 1

1. 25 mm
2. 38 mm
3. 51 mm
4. 64 mm
5. 76 mm
6. 89 mm
7. 102 mm
8. Grass deflector
9. Spring hinges

3. Install the cotter pins to secure the assemblies.

CHECK THE LUBRICANT IN THE GEAR BOX

The gearbox is designed to operate on SAE 80-90 wt. gear lube. Although the gear box is shipped with lubricant from the factory, check the level before operating the cutting unit.

1. Position the machine and cutting unit on a level surface.

2. Remove the check plug from the side of the gear box and make sure lubricant is up to bottom of the hole (Fig. 2). If the level of lubricant is low, remove the fill plug on top of the gear case and add enough lubricant to bring it up to bottom of the hole in the side.

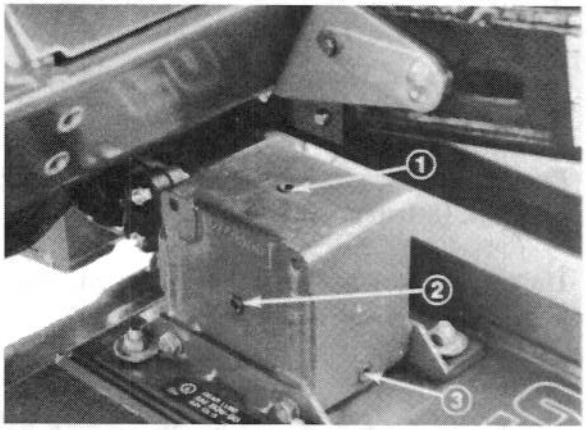

Figure 2

1. Filler plug
2. Check plug
3. Drain Plug

Operating Instructions

GRASS DEFLECTOR

⚠ WARNING

The grass deflector is a safety device that diverts grass and other foreign objects being discharged downward. WE STRONGLY RECOMMEND THAT THE DEFLECTOR BE IN ITS NORMAL OPERATING POSITION WHENEVER THE CUTTING UNIT IS ENGAGED. NEVER OPERATE THE CUTTING UNIT WITH THE DEFLECTOR REMOVED FROM THE CUTTING UNIT OR WITH IT ITED/BLOCKED IN A RAISED POSITION. IF YOU DO, THE BLADES COULD THEN THROW DEBRIS A CONSIDERABLE DISTANCE WITH SUFFICIENT FORCE TO CAUSE PERSONAL INJURY OR DAMAGE PROPERTY. If the grass deflector is damaged, repair or replace the affected parts.

Note: The deflector is spring loaded into its downward normal operating position but the operator can temporarily swing it out of the way to facilitate loading in a trailer or other manuevers.

TENSION SPRING ADJUSTMENT

For best performance, adjust spring tension so cutting unit bounce on uneven turf is minimal and the deck does not ride heavily over flat terrain. If scalping occurs or the cut is uneven from side to side, there may too much weight on the deck and weight may have to be transferred to the traction unit: i.e., increased spring tension.

By contrast, if too much weight is transferred to the traction unit, the deck will bounce excessively and the cut will be uneven. If the cutting unit does not perform properly, adjust as follows:

1. Stop the machine on a level surface, set the parking brake, fully raise the cutting unit, turn the ignition key to OFF and remove the key from the switch.

2. Remove the hair pin cotter from clevis pin securing spring end to spring cover and remove clevis pin. Align the top spring end hole with the new hole selected in the spring cover, insert the clevis pin and secure it with the hairpin cotter.

3. Resume operations. If further adjustments are required, repeat the procedure.

⚠ CAUTION

Counterbalance spring(s) are in tension when the deck is in the lowered position. Always raise the deck before adjusting or removing the springs.

Maintenance

Lubrication

GREASE BEARINGS AND BUSHINGS

The cutting unit must be lubricated regularly. If the machine is operated under normal conditions, lubricate the castor bearings and bushings with No. 2 general purpose lithium base grease or molybdenum base grease, after every 8 hours of operation or daily, whichever comes first. All other bearings, bushings and the gear box must be lubricated after every 50 hours of operation.

1. The cutting unit lubrication points are: castor spindle bushings, castor wheel bearings and blade spindle bearings.

2. Lower the cutting unit so the castor wheels are on a level surface. Be sure all height-of-cut pins are in the same hole locations. Remove the check plug (Fig. 5) from the side of the gear box and check the level of lubricant. If the level of lubricant is low, remove the fill plug on the top of the gear box and add SAE 80-90 wt. gear lube until the level is up to the bottom of the check hole.

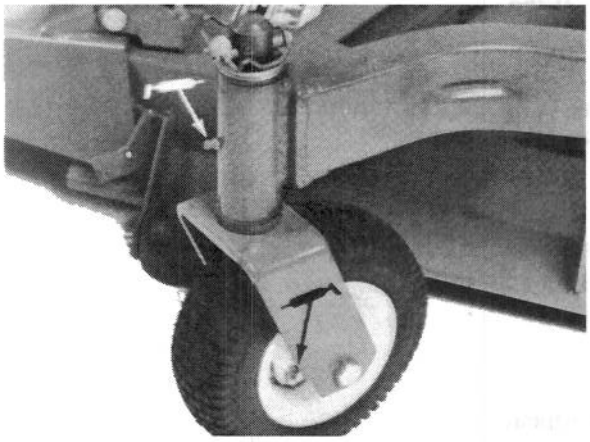

Figure 3



Figure 4

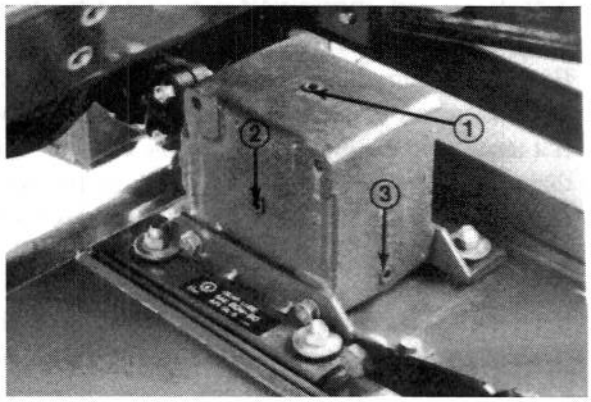

Figure 5

1. Filler plug
2. Check plug
3. Drain Plug

UNIT WILL NOT CUT OR CUTS POORLY

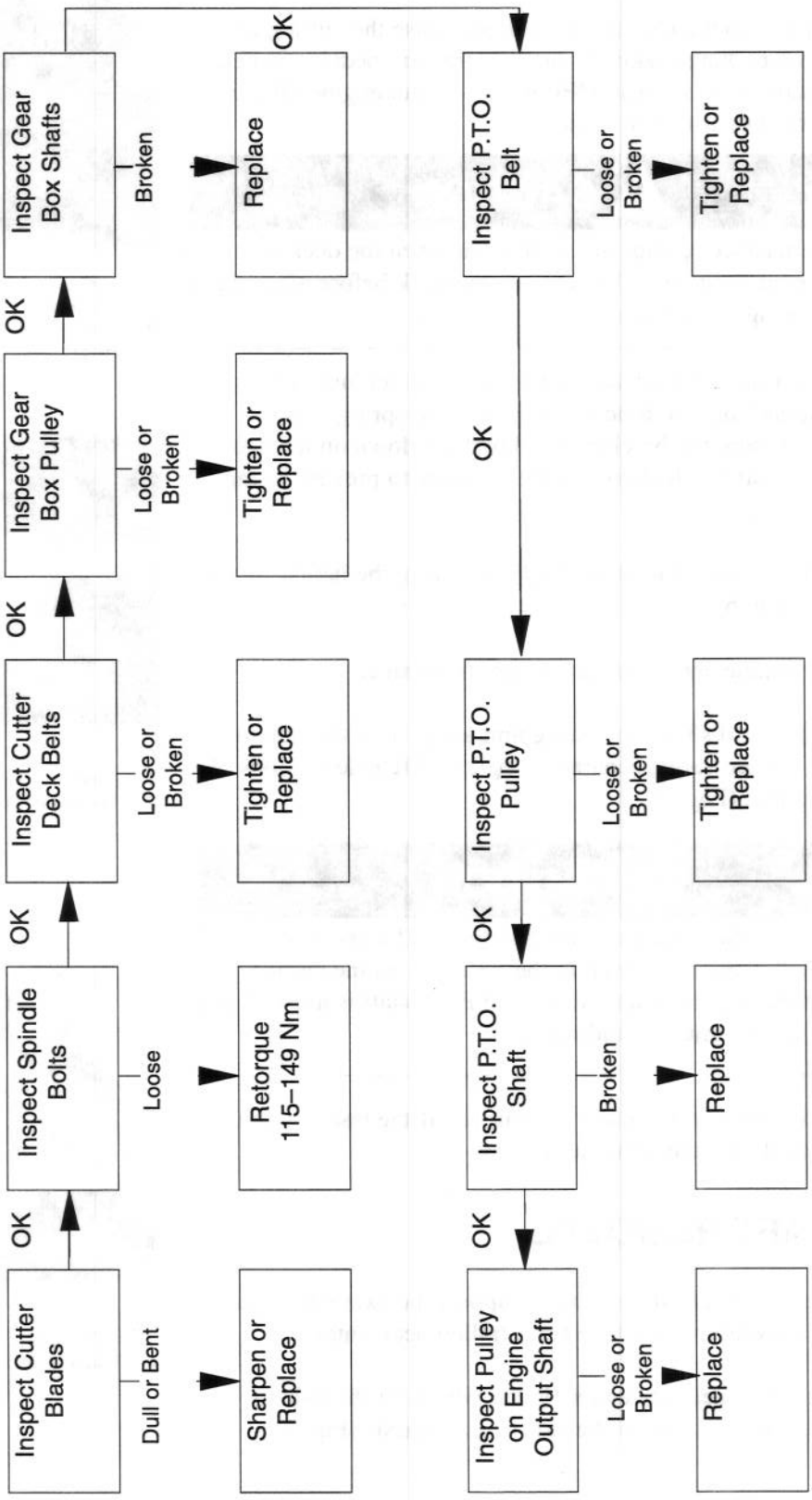

SEPARATING THE CUTTING UNIT FROM THE TRACTION UNIT

1. Position the machine on a level surface, raise the cutting unit, engage the parking brake, be sure the traction pedal is in neutral position, PTO lever in OFF position, shut engine OFF and remove the key from the switch.

> **⚠ CAUTION**
>
> Counterbalance springs are in dension when the deck is in its lowered position. Always raise the deck before adjusting or removing the springs.

2. Disconnect the counterbalance from the traction unit, remove the lockpins from the brackets, separate the spring tension assemblies from the brackets and lay them down on the deck. Loosely secure the lockpins to the brackets to prevent losing them (Fig. 6).

3. Lower the cutting unit, remove (4) pins from the height-of-cut brackets (Fig. 6).

4. Start the engine and raise the cutting unit frame.

5. Stop engine and slide the cutting unit away from the traction unit and carrier frame, separating male and female sections of the PTO shaft (Fig. 7).

> **⚠ CAUTION**
>
> Do not start the engine and engage the PTO lever when the PTO shaft is not connected to the gear box on the cutting unit. If the engine is started and the PTO shaft is allowed to rotate, serious injury could result.

6. The deck carrier frame must be removed if the traction unit will be used with any other accessory.

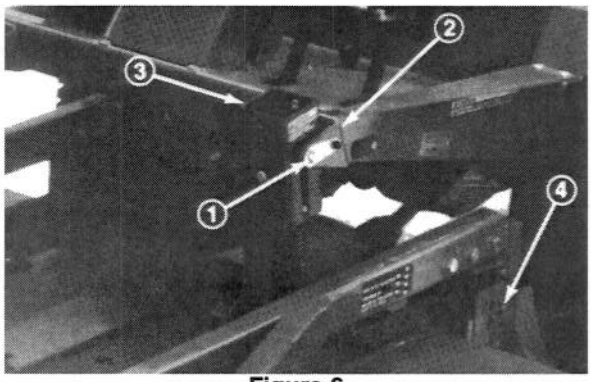

Figure 6

1. Lockpin
2. Bracket
3. Spring tension assembly
4. Height-of-cut clevis pin

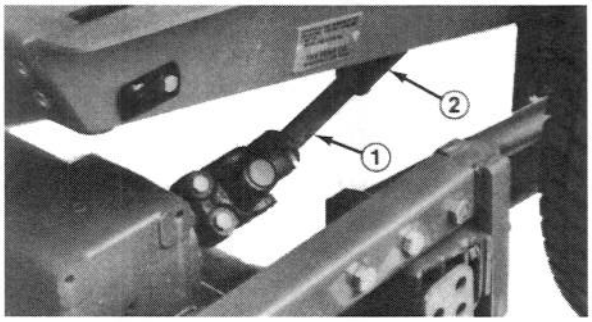

Figure 7

1. Male PTO shaft
2. Female PTO shaft

PTO SHAFT REMOVAL

1. Jack the left wheel off the floor. Support the axle with a jack stand to prevent the machine from falling accidentally.

2. Remove (5) wheel nuts and slide the wheel off the axle to expose the access hole in the side of the chassis (Fig. 8).

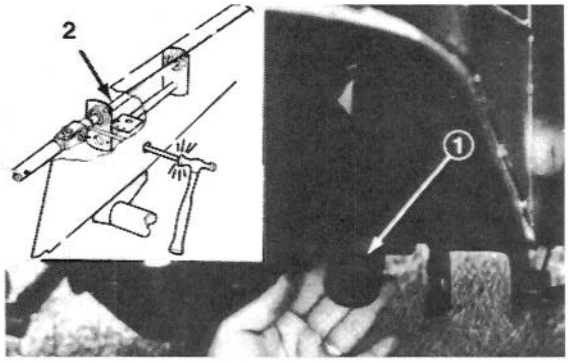

Figure 8

1. PTO plug
2. Output shaft

3. Rotate the PTO shaft to align the hole in the PTO shaft with the hole in chassis (Fig. 8).

4. Through the access hole in the chassis, drive the roll out of the PTO shaft and output shaft with pi punch and hammer (Fig. 8).

5. Loosen or remove bolts and locknuts and remove the PTO shaft.

6. Reinstall the wheel with (5) wheel nuts previously removed. Tighten the nuts to 80–109 kPa.

7. Lower the machine and remove jack.

SERVICING BUSHINGS IN THE CASTOR ARMS

The castor arms have bushings pressed into the top and bottom portion of the tube which, after many hours of operation, will wear. To check the bushings, move the castor fork back and forth and from side to-side. If the castor shaft is loose inside the bushings, bushings are worn and must be replaced.

1. Raise the cutting unit so its wheels are off the floor and block it so the cannot accidentally fall.

2. Remove the lynch pin and thrust washers from the top of the castor spindle.

3. Pull the castor spindle out of the mounting tube. Allow the thrust washers to remain on the bottom of the spindle.

4. Insert the pin punch into the top or bottom of the mounting tube and drive the bushing out of the tube (Fig. 9). Also drive the other bushing out of the tube. Clean the inside of the mounting tube to remove any dirt.

5. Apply grease to the inside and outside of new bushings. Using a hammer and flat plate, drive the bushings into the mounting tube.

6. Inspect the castor shaft for wear and replace if damaged.

7. Push the castor shaft through the bushings and the mounting tube. Slide the spacers onto the shaft and secure them with a lynch pin.

IMPORTANT: When bushings are installed, the inside diameter

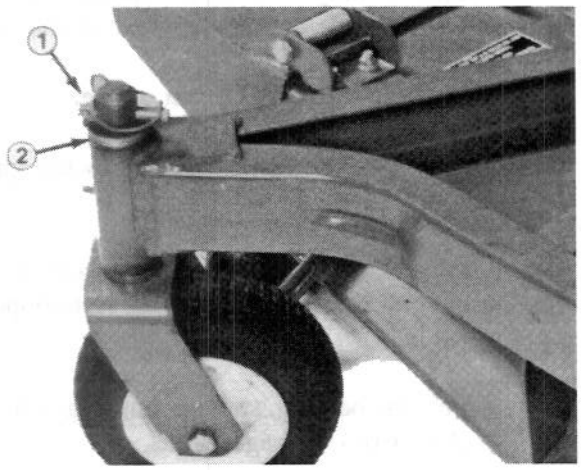

Figure 9

1. Lynch pin
2. Thrust washers

may collapse slightly, and this may not allow the castor shaft to be installed. If the castor spindle does not slide through new bushings and mounting tube, ream both bushings to inside diameter of 28.6 mm.

SERVICING THE CASTOR WHEEL AND BEARING

The castor wheel rotates on a high-quality roller bearing and is supported by a spanner bushing. Even after many hours of use, provided that the bearing was kept well-lubricated, bearing wear will be minimal. However, failure to keep the bearing lubricated will cause rapid wear. A wobbly castor wheel usually indicates a worn bearing.

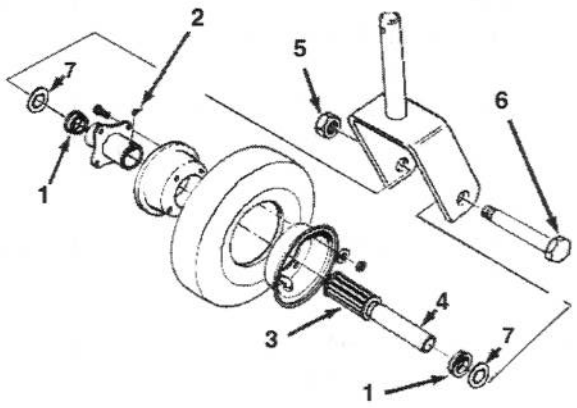

Figure 10

1. Bearing retainer
2. Grease fitting
3. Roller bearing
4. Spanner busing
5. Locknut
6. Capscrew
7. Thrust washer

1. Remove the locknut from the capscrew holding the castor wheel assembly between the castor fork. Grasp the castor wheel and slide the capscrew out of the fork.

   Note: Account for (2) thrust washers.

2. Tip the wheel to the side and allow the spanner bushing to fall out.

3. Remove one bushing from the wheel hub and allow the bearing to fall out. Remove the bushing from opposite side of the wheel hub.

4. Inspect the bearing, spanner bushing and the wheel for wear. Replace worn, damaged parts.

5. To assemble parts, slide the spanner bushing through the hub assembly.

7. Mount the castor wheel assembly and washers between the fork, insert the capscrew and locknut. Tighten the capscrew and locknut until the spanner bushing and washers bottom against the inside of the castor fork.

8. Pump grease through the grease fitting on the wheel until the bearing is greased thoroughly.

CHECKING FOR A BENT BLADE

1. Position the machine on a level surface, raise the cutting unit, engage the parking brake, be sure the traction pedal is in the neutral position, the PTO lever in the OFF position, shut off the engine, remove the key from the switch and disconnect the wires from the spark plugs. Block the cutting unit to prevent it

from falling accidentally.

2. Rotate the blade until the ends face forward and backward. Measure from inside of the cutting unit to the cutting edge at front of blade (Fig. 11), and remember this dimension.

3. Rotate the opposite end of the blade forward. Measure between the cutting unit and the cutting edge of blade at the same position as in step 2. The difference between dimensions obtained in steps 2 and 3 must not exceed 32 mm. If dimension exceeds 32 mm, replace the blade because it is bent: refer to *Removing Cutter Blade*.



Figure 11

REPLACING THE CUTTER BLADE

The blade must be replaced if a solid object is hit, the blade is out-of-balance or if the blade is bent. Always use genuine TORO replacement blades to be sure of safety and optimum performance. Never use replacement blades made by other manufacturers because they could be dangerous.

⚠ WARNING

Do not try to starighten a blade that is bent, and never weld a broken or cracked blade. Always use a new blade to assure safety.

1. Position the machine on a level surface, raise the cutting unit, engage the parking brake, be sure the traction pedal is in neutral position, the PTO lever in the OFF position, shut off the engine, remove the key from the switch and disconnect wires from spark plugs. Block the cutting unit to prevent it from falling accidentally.

2. Grasp the end of blade using a cloth or thickly padded glove. Remove the blade bolt, flatwasher, cup and blade from spindle shaft.

3. Install the blade-sail facing toward the cutting unit- with the cup, flatwasher and blade bolt. Tighten the blade bolt to 115–149 Nm

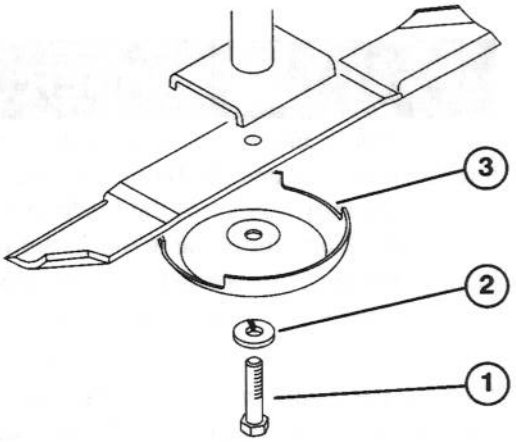

Figure 12

1. Blade bolt
2. Flatwasher
3. Cut

CHECKING THE SAIL AND SHARPENING THE CUTTER BLADE

Two areas must be considered when checking and servicing the cutter blade: one area is the sail, the other is the cutting edge. Both the cutting edges and the sail, which is the turned up portion opposite

the cutting edge, contribute to a good quality-of-cut. The sail is important because it pulls grass up straight, thereby producing an even cut. However, the sail will gradually wear down during operation, and this condition is normal. As the sail wears down, the quality-of-cut will degrade somewhat, although the cutting edges are sharp. The cutting edge of the blade must be sharp so the grass is cut rather than torn. A dull cutting edge is evident when tips of the grass appear brown and shredded. Sharpen the cutting edges to correct this condition.

1. Position the machine on a level surface, raise the cutting unit, engage the parking brake, be sure the traction pedal is in neutral position, the PTO lever in the OFF position, shut engine OFF, remove the key from the switch and disconnect wires from spark plugs. Block the cutting unit to prevent it from falling accidentally.

2. Examine the cutting ends of the blade carefully, especially where the flat and curved parts of the blade meet (Fig. 13 A). Since sand and abrasive material can wear away the metal that connects the flat and curved parts of the blade, check the blade before using the mower. If wear is noticed (Fig. 13 B), replace the blade.

3. Examine the cutting edges of all blades. Sharpen the cutting edges if they are dull or nicked. Sharpen only the top of the cutting edge and maintain the original cutting angle to make sure of sharpness (Fig. 14). The blade will remain balanced if same amount of metal is removed from both cutting edges.

⚠ DANGER

If the blade is allowed to wear, a slot will form between the sail and the flat part of the blade (Fig. 13 C). Eventually a piece of the blade may break off and be thrown from under the housing, possibly resulting in serious injury to yourself or to bystanders.

Note: Remove the blades and sharpen them on a grinder: refer to *Removing Cutter Blades*, steps 2 and 3. After sharpening the cutting edges, reinstall the blade with the cup, flatwasher and blade bolt. Blade sails must be on top of blade. Tighten the blade bolt to 115–149 Nm.

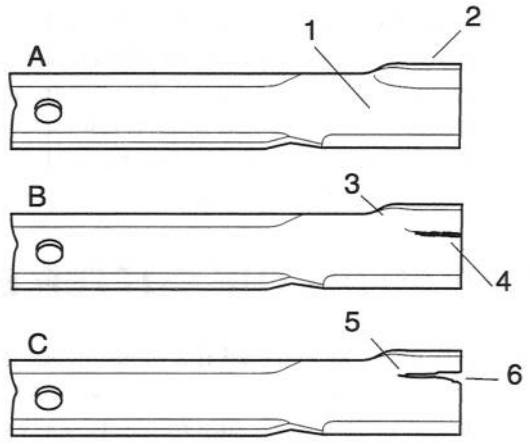

Figure 13

1. Flat part of blade
2. Sail
3. Sail
4. Wear
5. Wear
6. Slot formed

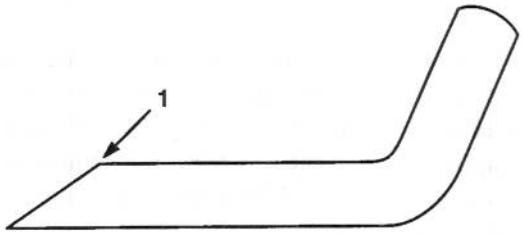

Figure 14

1. Sharpen at this angle only

CORRECTING CUTTING UNIT MISMATCH

If one cutter blade cuts lower than the others, correct as follows:

1. Lower the cutting unit onto a level surface, engage the parking brake, be sure the traction pedal is in neutral position, the PTO lever in the OFF position, shut engine OFF, remove the key from the switch and disconnect wires from spark plugs. Make sure tire pressure is equal on all tires.

2. Raise the height-of-cut to the 4 in. position: refer to *Adjusting Height Of Cut.*

3. Rotate blades so the tips line up with one another. Tips of the adjacent blades must be within 3 mm If tips are not within 3 mm of each other, proceed to step 10 and add shims between spindle housing and bottom of the cutting unit.

4. Check to make sure front height-of-cut pins are resting properly on frame cushions. If pins are not resting properly, place a shim or shims under cushion to raise it for proper alignment.

5. Position all three blades in the "A" position (Fig. 15) and measure from level surface to the bottom of the tip end of each blade (Fig. 16).

6. Note measurement attained at "A", rotate blades to the"B" position (Fig. 14), measure distance of all blades to level surface and note dimensions (Fig. 15).

7. Rotate blades to the "C" position, measure and note distance measured (Fig. 14, 15).

8. Compare measurements at various positions. All dimensions must be equal within 6 mm from any two adjacent blades. The difference between dimensions of all three blades must not exceed 9.5 mm. If difference exceeds specifications, go to step 9.

9. Remove the capscrews, flatwashers and locknuts from outer spindle in the area where shims must be added. To raise or lower the blade, add a shim, Part No. 3256-24, between spindle housing and bottom of the cutting unit. Continue checking alignment of blades and adding shims until tips of blades are within the required dimension.

10. Equalize side-to-side measurements as follows:

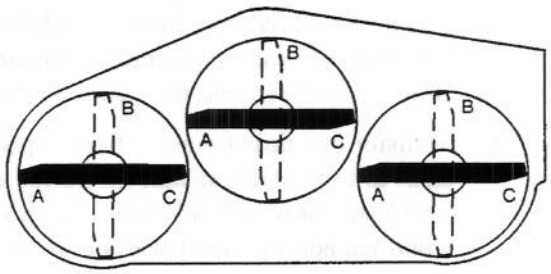

Figure 15

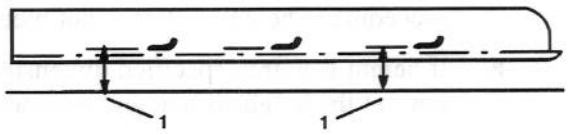

Figure 16

1. Measure from blade tip to level surface

A. Cutting units usually operated at 25 mm to 50 mm height-of-cut should have the low side of the cutting unit raised. Remove the lynch pin securing castor wheel on low end (Fig. 17) and remove the castor assembly.

B. Transfer one thrust washer from top side of the castor shaft to lower side, install the castor assembly and compare blade height of all blades; refer to items 3 through 7. Continue adding thrust washers if height still does not meet requirements.

C. If the cutting unit is operated at 5–10 cm height-of-cut, lower the high side of the cutting unit. Remove lynch pin of the castor at high end of unit and remove the castor assembly (Fig. 17).

D. Transfer one thrust washer from lower side of the castor shaft to top side, install assembly and compare blade height of all blades; refer to items 3 through 7. Repeat procedure if height still does not meet requirements.

E. If height is within specified dimension, install thelynch pin, set the height-of-cut and resume operation.

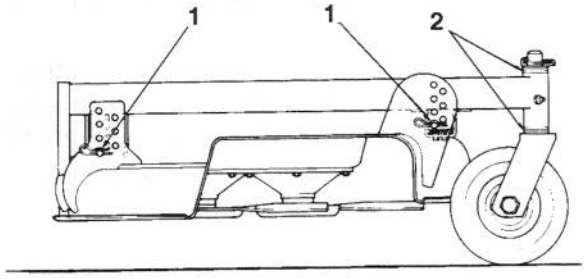

Figure 17
1. Highest height-of-cut setting
2. Thrust washers are required

REPLACING THE GRASS DEFLECTOR

1. Position the machine on a level surface, raise the cutting unit, engage the parking brake, be sure the traction pedal is in neutral position, the PTO lever in OFF position, shut engine OFF and remove the key from the switch. Block the cutting unit to prevent it from falling accidentally.

2. Remove two capscrews, locknuts and springs securing deflector mounts to pivot brackets.

3. To remove the pivot brackets, remove carriage bolts and nuts.

4. Reinstall pivot brackets on top of discharge opening with carriage bolts and nuts. Head of carriage bolts must be on inside of the cutting unit.

5. Position deflector mounts on pivot brackets and secure parts together with capscrews, locknuts and springs. Both locknuts must face each other. Tighten the locknuts until they are flush against deflector pivots.

6. Lift deflector and allow it to drop to check spring tension. Deflector must be held firmly in full downward position by spring tension. Correct if necessary.

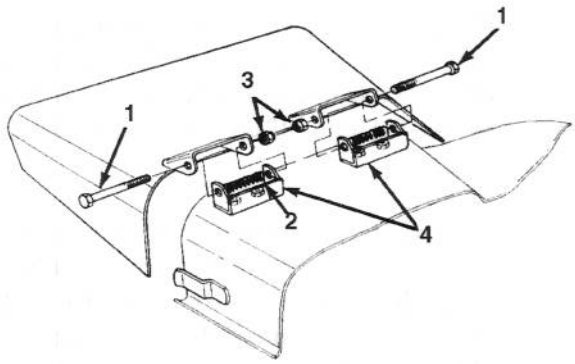

Figure 18
1. Capscrew
2. Locknut
3. Spring
4. Pivot brackets

ADJUSTING THE IDLER PULLEY

The idler pulley applies force against the belt so power can be transmitted to the blade pulleys. If the idler is not tensioned against the belt with sufficient force, maximum power will not be transmitted to the pulleys. Tension on the belt requires 54 to 68 Nm of torque on the large nut, which applies force against the belt If the idler is not adjusted to these specifications, adjustment is necessary.

1. Position the machine on a level surface, lower the cutting unit, engage the parking brake, be sure the traction pedal is in neutral position, the PTO lever in OFF position, shut engine OFF and remove the key from the switch.

2. Release and unhook latches securing center cover to top of the cutting unit. Remove cover from the cutting unit.

3. Loosen two nuts securing idler plate in place. Using a socket and torque wrench, tighten the idler adjusting nut to 47 Nm.

4. Hold the torque against the belt and tighten the two nuts so idler plate is held securely in place. Release the idler adjusting nut. Install the cover and secure the latches.

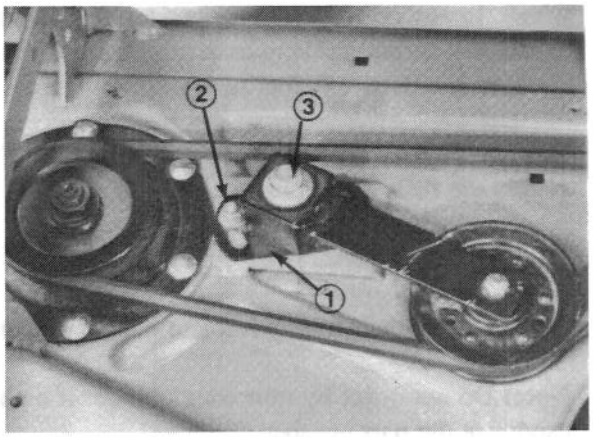

Figure 19

1. Idler adjusting nut
2. Nuts (2)
3. Idler plate

REPLACING THE DRIVE BELT

The blade drive belt, tensioned by the adjustable idler, is very durable. However, after many hours of use, the belt will show signs of wear. Signs of a worn belt are: squealing when the belt is rotating, blades slipping when cutting grass, frayed edges, burn marks and cracks. Replace the belt if any of these conditions are evident.

1. Position the machine on a level surface, lower the cutting unit, engage the parking brake, be sure the traction pedal is in neutral position, the PTO lever in the OFF position, shut off the engine and remove the key from the switch.

2. Release and unhook the latches securing the covers to the top of the cutting unit. Remove the covers.

3. Loosen the two nuts securing the idler plate in place and remove the old belt fromthe pulleys.

4. To install a new belt, the gear box base must be removed. To do this, remove the four carriage bolts and locknuts holding the gear box base.

5. Install the new belt around the gear box pulley, spindle pulleys,

stationary idler pulley and adjustable idler pulley.

6. Install the gear box base with carriage bolts and locknuts.

7. Using a torque wrench, adjust the tension of idler pulley against the belt: refer to *Adjusting The Idler Pulley*.

8. Reinstall covers and secure latches.

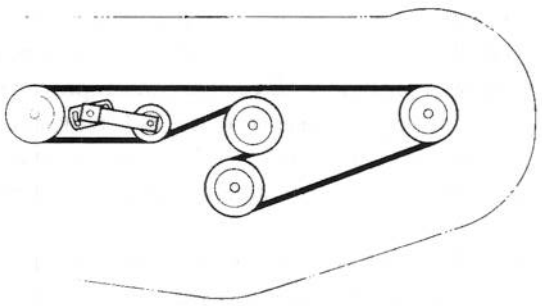

Figure 20

MODEL AND SERIAL NUMBERS

The cutting deck has two identification numbers: a model number and a serial number. The two numbers are stamped into a plate which is located on carrier frame behind the right front castor wheel. In any correspondence concerning the mower, supply the model and serial numbers to assure that correct information and replacement parts are obtained.

To order replacement parts from an authorized TORO Distributor, supply the following information:

1. Model and serial numbers of the machine.

2. Part number, description and quantity of parts desired.

Note: Do not order by reference number if a parts catalog is being used; use the part number.

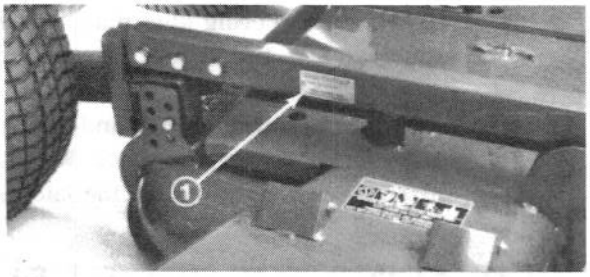

Figure 21
1. Model and serial number