Form No. 3412-187 Rev B

GeoLink® Spray System Finishing Kit

Serial Number 315000000-315999999 Multi Pro® 5800 Turf Sprayer

Model No. 131-7260

Installation Instructions

The GeoLink™ spray system kit is an attachment for a turf spray application vehicle and is intended to be used by professional, hired operators in commercial applications. It is designed primarily for spraying on well-maintained lawns in parks, golf courses, sports fields, and on commercial grounds.

You may contact Toro directly at www.Toro.com for product safety and operation training materials, accessory information, help finding a dealer, or to register your product.

⚠ WARNING

CALIFORNIA
Proposition 65 Warning

This product contains a chemical or chemicals known to the State of California to cause cancer, birth defects, or reproductive harm.

Use of this product may cause exposure to chemicals known to the State of California to cause cancer, birth defects, or other reproductive harm.

Safety

⚠ WARNING

Chemical substances used in the spray system may be hazardous and toxic to you, bystanders, animals, plants, soils, or other property.

- **Carefully read and follow the chemical warning labels and material safety data sheets (MSDS) for all chemicals used and protect yourself according to the chemical manufacturer's recommendations. For example, use appropriate personal protective equipment (PPE), including face and eye protection, gloves, or other equipment to guard against personal contact with a chemical.**
- **There may be more than 1 chemical used and information on each chemical should be assessed.**
- **Refuse to operate or work on the sprayer if this information is not available.**
- **Before working on a spray system, clean the machine ensure that the spray system has been triple rinsed and neutralized according to the recommendations of the chemical manufacturer(s) and that all the valves have been cycled 3 times.**
- **Verify that there is an adequate supply of clean water and soap nearby, and immediately wash off any chemicals that contact you.**

© 2017—The Toro® Company
8111 Lyndale Avenue South
Bloomington, MN 55420

Register at www.Toro.com.

CE

Original Instructions (EN)
Printed in the USA
All Rights Reserved

3412-187 B

Installation

Loose Parts

Use the chart below to verify that all parts have been shipped.

Procedure	Description	Qty.	Use
1	No parts required	–	Prepare to install the kit.
2	No parts required	–	Disconnect the rear wire harness from the optional attachment.
3	Switch plug (pivoting hose reel kit—Toro Part No. 99-7420)	1	Disconnect the optional pivoting hose reel kit.
4	Tube assembly (Toro Part No. 114-9553) Cable tie	2 8	Disconnect the optional foam-marker kit.
5	No parts required	–	Disconnect the ultra sonic boom kit.
6	No parts required	–	Remove the center section cover (11-nozzle) of the optional covered-boom kit.
7	No parts required	–	Remove the undercarriage shroud.
8	No parts required	–	Remove the engine-control module and mounting bracket (machine models with gasoline engines).
9	No parts required	–	Disconnecting the pressure-sense tube for the dash gauge.
10	Rear wire harness	1	Remove the rear wire harness for the machine.
11	Cable tie Switch plug	1 1	Remove the rate-control switch.
12	Cap (quick coupler) Retainer	3 3	Remove the boom-section valves.
13	Cable tie	1	Remove the boom sections.
14	Flange-head bolt (3/8 x 1 inch) Flange locknuts (3/8 inch) Center boom extension Cylinder mount (wide) Tie plate (wide) Carriage bolt (1/2 x 1-1/4 inches) Flange locknut (1/2 inch)	2 2 1 1 1 4 4	Install the center boom extension.
15	Sprayer nozzle Hose assembly (sprayer valve 5 or 6) Flange locknut (5/16 inch)	2 2 2	Install the mount brackets and sprayer nozzles to the center boom section.

Procedure	Description	Qty.	Use
16	Flow meter Flange clamp 76 mm (3 inches) Gasket (2-1/4 inch outside diameter) Reducer adapter Flange clamp 51 mm (2 inches) Gasket (1-5/16 inch outside diameter) Barbed-flange fitting (1 inch) Hose (1 x 7-1/4 inches) Hose clamp Pressure transducer and manifold Hose (1 x 8-1/2 inches) R-clamp Flange-head bolt (1/4 x 3/4 inch) Flange locknut (1/4 inch)	1 2 2 2 1 1 1 1 3 1 1 1 1 1	Install the flow meter and pressure transducer.
17	No parts required	–	Install the new center boom section.
18	Valve mount and sprayer-valve assembly Bolt (4 x 10 mm) Sprayer controller Flange locknut (4 mm) Flange-head bolts (5/16 x 3/4 inch) Flange locknuts (5/16 inch) Hose clamp	1 4 1 4 8 8 1	Install the valve mount and valves.
19	Hydraulic hose (1/4 x 24-3/4 inches)	4	Assemble the boom-lift cylinders.
20	Nylon-flange bushing Cable tie Supply hose assembly—188 cm (74 inches) Supply hose assembly—234 cm (92 inches) Supply hose assembly—279 cm (110 inches)	4 1 1 1 1	Install the outer boom sections.
21	Supply hose—279 cm (110 inches) Supply hose—234 cm (92 inches) Supply hose—188 cm (74 inches) Supply hose—81 cm (32 inches)	2 2 4 2	Install the sprayer-nozzle hoses.
22	Rear wire harness Cable tie	1 3	Assemble the rear wire harness to the machine.
23	No parts required	–	Install the engine-control module and mounting bracket (machines with gasoline engines only).
24	No parts required	–	Install the undercarriage shroud.
25	No parts required	–	Connect the rear wire harness.
26	No parts required	–	Connect the pressure-sense tube for the dash gauge.

Procedure	Description	Qty.	Use
27	Navigation receiver—GeoLink precision spray system kit (Model 41623)	1	Install the navigation receiver.
	Receiver mount	1	
	U-bolt	2	
	RTK-antenna bracket (optional CDMA RTK correction modem kit or GSM RTK correction modem kit)	1	
	Flange locknut (3/8 inch)	4	
	Hex-head bolt (5 x 16 mm)	3	
	Washer (5 mm)	3	
	Cellular antenna (optional CDMA RTK correction modem kit or GSM RTK correction modem kit)	1	
	Coaxial cable (optional CDMA RTK correction modem kit or GSM RTK correction modem kit)	1	
	Serial label (part of the X25 or the X30 GeoLink Precision Spray System Kits)	1	
28	Sprayer Monitor—GeoLink precision spray system kit (Model 41623)	1	Install the sprayer monitor.
	Display hood	1	
	Ball mount—GeoLink precision spray system kit (Model 41623)	1	
	Monitor arm—GeoLink precision spray system kit (Model 41623)	1	
	Reinforcement plate	1	
	Flange-head bolt (1/4 x 1-1/2 inches)	4	
	Flange locknut (1/4 inch)	4	
29	Data Harness (navigation system)—GeoLink precision spray system kit (Model 41623)	1	Install the wire harnesses for the navigation components.
	Electrical Harness (navigation system)—GeoLink precision spray system kit (Model 41623)	1	
	Cable tie	5	
30	No parts required	–	Connect the wire harness for the optional pivoting hose-reel kit.
31	Cable tie	4	Connect the optional foam marker kit.
32	No parts required	–	Connect the ultra sonic boom kit.
33	Cover extension assembly (12-nozzle—Toro Part No. 120-0621)	1	Assemble the optional covered-boom kit.
	Pop rivet (Toro Part No. 114439)	22	
	Support bracket (center section cover—Toro Part No. 131-3703-03)	4	
	Clip nut (Toro Part No. 94-2413)	4	
	Flange-head bolt (3/8 x 1-1/4 inches—Toro Part No. 110-5050)	16	
	Flange locknut (3/8 inch—Toro Part No. 104-8301)	16	
	Cover strap (Toro Part No. 120-0629)	2	
	Flange-head bolt (5/16 x 1-1/4 inches—Toro Part No. 323-36)	4	

Procedure	Description	Qty.	Use
34	No parts required	–	Connect the optional tank rinse kit.
35	No parts required	–	Complete the installation of the GeoLink spray system finishing kit.

1

Preparing to Install the Kit

No Parts Required

Preparing the Sprayer Tank and Optional Rinse Tank

1. Park the machine on a level surface.
2. Engage the parking brake.
3. Extend the left and right boom sections to the horizontal position.
4. Clean the sprayer; refer to Cleaning the Sprayer in the *Operator's Manual* for the machine.

   Important: You must completely empty the sprayer tank before installing the GeoLink Spray System Finishing Kit.
5. **For machines with the optional Tank-Rinse Kit, perform the following:**

   A. Pump the water from the rinse tank into the sprayer tank; refer to Operating the Rinse Kit in the *Installation Instructions* for the Tank-Rinse Kit.

   B. Drain the water from the sprayer tank; refer to Cleaning the Sprayer in the *Operator's Manual* for the machine.

   C. Shut off the engine and remove the key.

Disconnecting the Battery

⚠ WARNING

Electrical sparks can cause the battery gasses to explode, resulting in personal injury.

Incorrect battery cable routing could damage the sprayer and cables, causing sparks.

- **Always disconnect the negative (black) battery cable before disconnecting the positive (red) cable.**
- **Always connect the positive (red) battery cable before connecting the negative (black) cable.**

Battery terminals or metal tools could short against metal sprayer components, causing sparks.

- **When removing or installing the battery, do not allow the battery terminals to touch any metal parts of the sprayer.**
- **Do not allow metal tools to short between the battery terminals and metal parts of the sprayer.**
- **Always keep the battery strap in place to protect and secure the battery.**

1. Remove the battery cover and disconnect the negative (black—ground) cable from the battery post (Figure 1 and Figure 2).

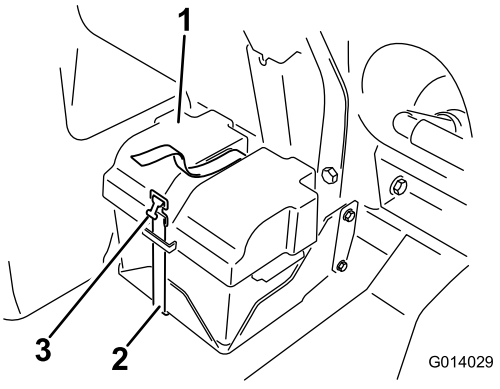

g014029

Figure 1

1. Battery cover
2. Strap
3. Buckle

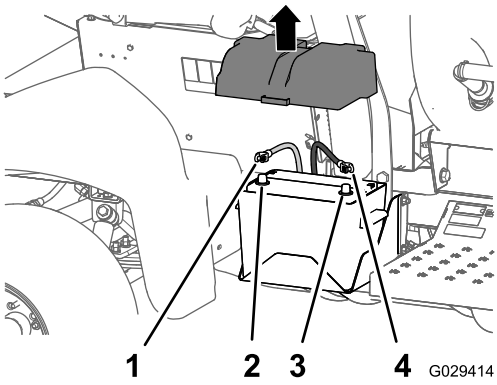

g029414

Figure 2

1. Positive battery cable
2. Positive battery post
3. Negative battery post
4. Negative battery cable

2. Disconnect the positive (red) cable from the battery post (Figure 2).
3. Tilt both seats forward and secure them by moving the prop rods into the detents at the end of the slots at the center console base.
4. Allow the engine to cool completely.

2

Disconnecting the Rear Wire Harness from the Optional Attachments

No Parts Required

Disconnecting the Pivoting Hose-Reel Kit

1. At the back of the machine, locate the wire harness for the electric-hose-reel kit at the back of the sprayer tank (Figure 3).

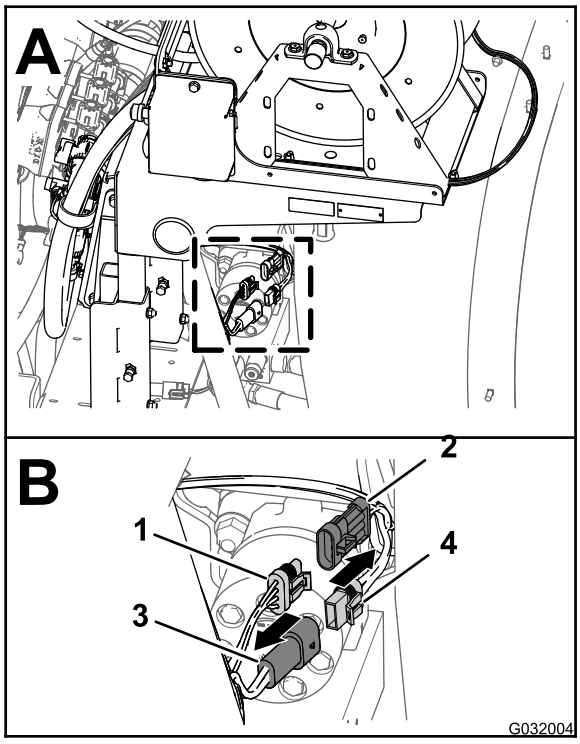

g032004

Figure 3

1. 3-socket connector (rear main harness)
2. 3-pin connector (harness—electric hose reel)
3. 2 socket pin (rear main harness)
4. 2 socket connector (harness—electric hose reel)

2. Disconnect the 2-socket connector of the harness for the electric hose reel from the 2-pin connector of the rear main harness (Figure 3).
3. Disconnect the 3-pin connector of the harness for the electric hose reel from the 3-pin socket of the rear main harness (Figure 3).

Disconnecting the Compressor for the Foam Marker Kit

1. At the back of the foam-marker tank, locate the wire harness at the compressor (Figure 4).

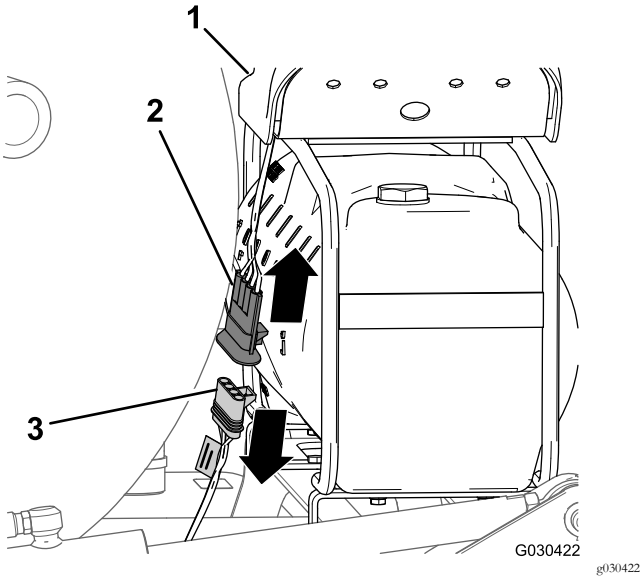

Figure 4

1. Compressor
2. 4-pin connector (wire harness for the compressor)
3. 4-socket connector (wire harness for the finishing kit)

2. Disconnect the 4-pin connector of the compressor harness from the 4-socket connector of the rear wire harness of the machine (Figure 4).

Disconnecting the Pump for the Tank Rinse Kit

1. At the back of the machine, press together the sides of the rinse-pump cover and lift the cover up until the tabs of the cover clear the slots in the saddle plate, and remove the cover from the machine (Figure 5).

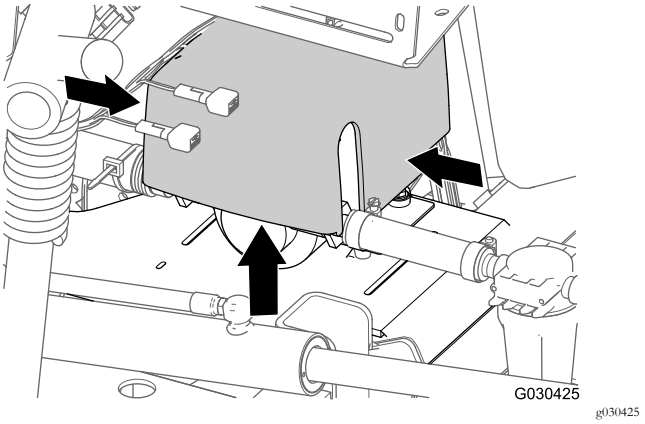

Figure 5

2. Disconnect the 6-pin connector of the rinse-pump harness from the 6-socket connector of the rear main harness (Figure 6).

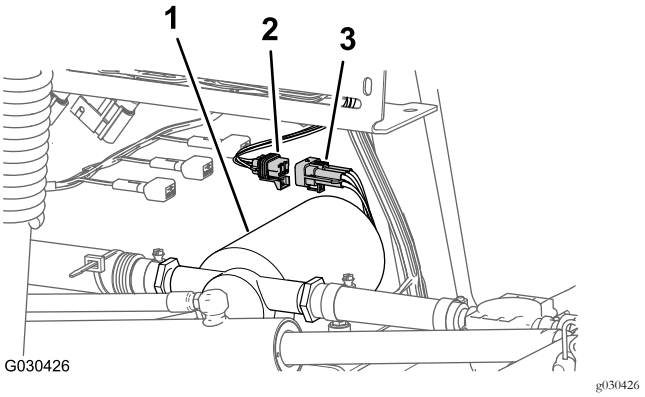

Figure 6

1. Rinse pump
2. 6-socket connector (rear main harness)
3. 6-pin connector (rinse-pump harness)

3

Removing the Pressure Control Switch—Optional Pivoting Hose-Reel Kit

Parts needed for this procedure:

1	Switch plug (pivoting hose reel kit—Toro Part No. 99-7420)

Procedure

1. Remove the 2 bolts (5/16 x 3/4 inch) and 2 locknuts (5/16 inch) that secure the control box to the reel-mounting plate (Figure 7).

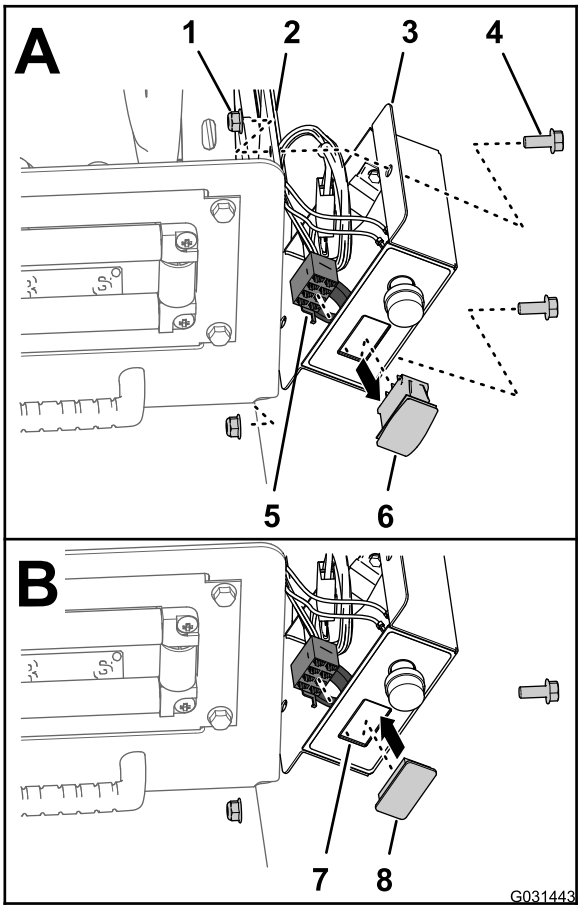

g031443

Figure 7

1. Locknut (5/16 inch)
2. Reel-mounting plate
3. Control box
4. Bolt (5/16 x 3/4 inch)
5. 8-socket connector (control box harness)
6. Pressure-control switch
7. Opening (control box cover)
8. Switch plug

2. Disconnect the 8-socket connector for the control box harness from the pressure-control switch (Figure 7).
3. Route the 8-socket connector inside the control box (Figure 7).
4. Squeeze the lock tabs of the pressure-control switch and press the switch out of the control box (Figure 7).

   Note: Discard the switch that you removed from the machine.
5. Align the switch plug to the opening in the control box where you removed the switch (Figure 7).
6. Insert the switch plug into the control box until the plug snaps into the cover securely (Figure 7).
7. Align the control box to the reel-mounting plate (Figure 7) and secure the box to the plate with the 2 bolts (5/16 x 3/4 inch) and 2 locknuts (5/16 inch).
8. Torque the bolts and nuts to 1978 to 2542 N·cm (175 to 225 in-lb).

4

Disconnecting the Optional Foam Marker Kit

Parts needed for this procedure:

2	Tube assembly (Toro Part No. 114-9553)
8	Cable tie

Removing the Liquid and Air Tubes from the Machine

1. At the connection panel of the compressor for the foam marker kit, secure a cable tie around the clear and blue tubing for the right boom section (Figure 8).

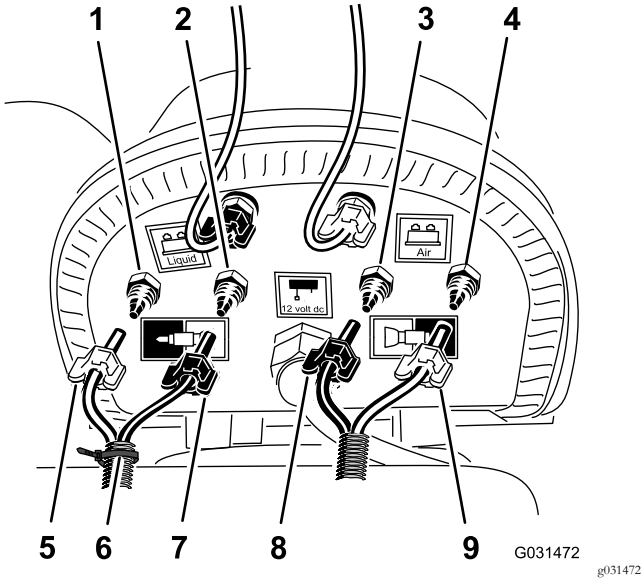

Figure 8

1. Compression fitting—water (right boom section—blue tube)
2. Compression fitting—air (right boom section—clear tube)
3. Compression fitting—water (left boom section—blue tube)
4. Compression fitting—air (left boom section—clear tube)
5. Compression nut—air (right boom section—blue tube)
6. Cable tie
7. Compression nut—water (right boom section—clear tube)
8. Compression nut (left boom section—blue tube)
9. Compression nut (left boom section—clear tube)

2. Loosen the compression nuts for the 2 clear and 2 blue tubes for the foam nozzles at the left and right boom section (Figure 8).
3. Remove the 4 tubes from the compression fittings for the boom sections (Figure 8).
4. At the outer boom section, use a piece of tape to mark the left liquid and air tubes for the left boom section and the right liquid and air tubes for the right boom section.
5. Move the tubes for the foam nozzles at the left and right boom section rearward and through the R-clamp near the pivot point for the boom section (Figure 9).

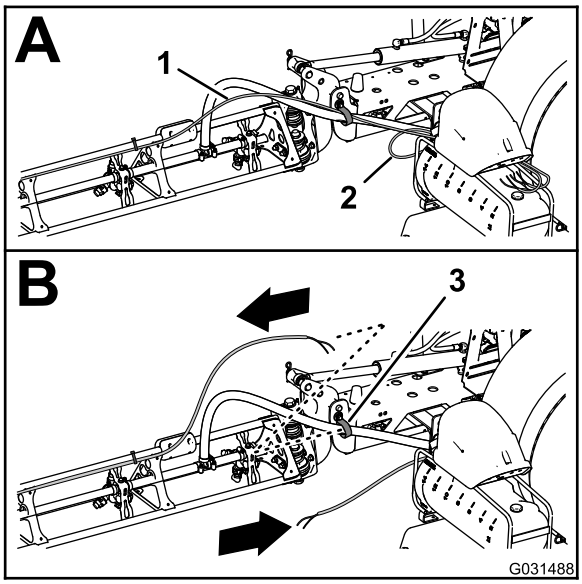

Figure 9

1. Tubing—foam-marker nozzle (right boom section)
2. Tubing—foam-marker nozzle (left boom section)
3. R-clamp

6. If your machine has the **center boom extension kit** installed, loosely secure the free end of the liquid and air tubes to the outer boom section, and skip the procedures for Removing the Liquid and Air Tubes from the Machine (page 8) and Installing the New Tube Assembly (page 11).

Preparing the New Tube Assemblies for the Foam-Marker Nozzles

Machines without the Center Boom Extension Kit

1. Remove the cable ties that secure the liquid and air tubes of the foam marker kit to the outer boom section (Figure 10).

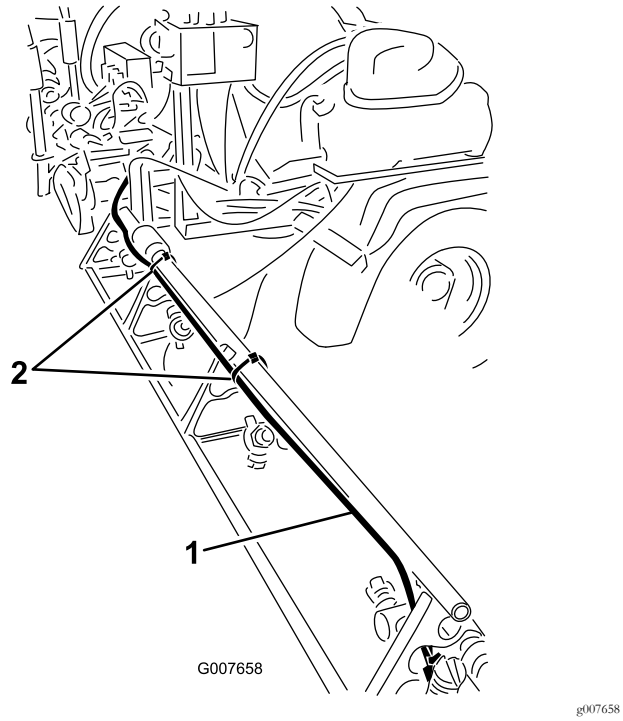

Figure 10

1. Liquid and air tubes (right boom section shown)
2. Cable ties

2. At the foam-marker nozzle, loosen the compression nut that secures the blue tube (water) to the blue compression fitting of the foam-marker nozzle (Figure 11).

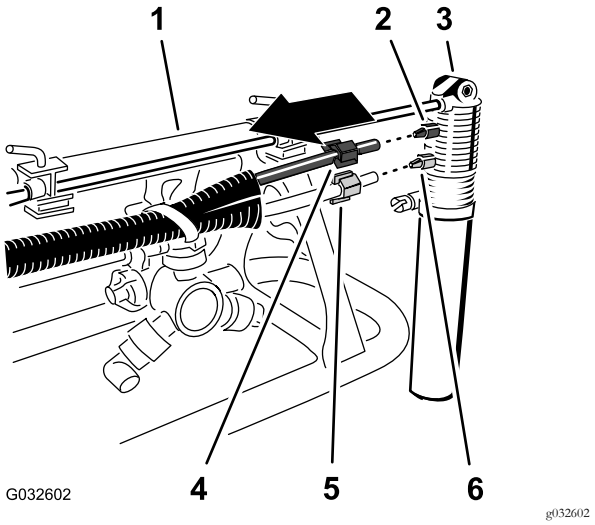

Figure 11

1. Outer boom section
2. Compression fitting (blue)
3. Foam-marker nozzle
4. Compression nut (blue—blue water tube)
5. Compression nut (white—clear air tube)
6. Compression fitting (white)

3. Loosen the compression nut that secures the clear tube (air) to the white compression fitting of the foam-marker nozzle of the foam-marker nozzle (Figure 11).
4. Remove the liquid and air tubes from the machine.
5. Remove the compression nuts at the ends of the tubes (Figure 11).

   Note: Retain the compression nuts for installation in step 1 of Installing the New Tube Assembly (page 11).
6. Align the old liquid and air tubes (Figure 12) to the new tube assembly (Toro Part No. 114-9553).

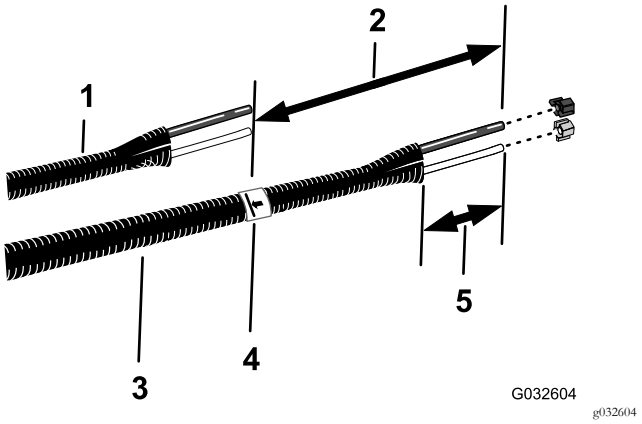

Figure 12

1. Old liquid and air tubes
2. 26 cm (10 inches)
3. New tube assembly (Toro Part No. 114-9553)
4. Tape and mark
5. 77 to 102 mm (3 to 4 inches)

7. Use a piece of tape to mark the length of the old liquid and air tubes onto the new tube assembly.
8. At the new tube assembly, add 26 cm (10 inches) length from the mark that you made in step 7, mark the tube assembly, and cut the tubes at the second (longer) mark (Figure 12).
9. If the old liquid and air tubes ares marked with a cable tie, mark the new tube assembly with a cable tie; otherwise skip to step 10.

   Note: You no longer need the old liquid and air tubes.
10. Remove 77 to 102 mm (3 to 4 inches) of the sheathing from around each end of the tube assembly (Figure 12).
11. Repeat steps 1 through 10 for the liquid and air tubes at the other side of the machine.

Installing the New Tube Assembly

Machines without the Center Boom Extension Kit

1. Slip the blue compression nut over the ends of blue tube and the white compression nut over the clear tube (Figure 13).

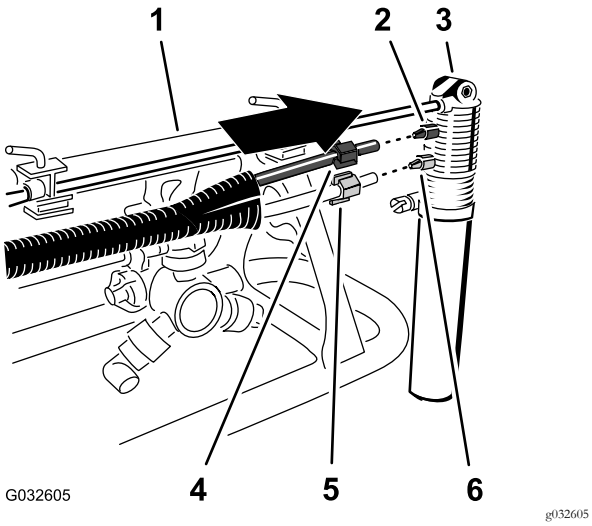

Figure 13

1. Outer boom section
2. Compression fitting (blue)
3. Foam-marker nozzle
4. Compression nut (blue—blue water tube)
5. Compression nut (white—clear air tube)
6. Compression fitting (white)

2. Align the end of the clear tube with the white compression nut to the white fitting of the foam-marker nozzle, and tighten the compression nut by hand (Figure 13).
3. Align the end of the blue tube with the blue compression nut to the blue fitting of the foam-marker nozzle, and tighten the compression nut by hand (Figure 13).
4. Route the tube assembly along the rear side of the upper support pole of the outer boom section as shown in Figure 14.

   Important: If the tube assembly is installed at the wrong side of the upper support pole, the tubes pinch between the cradle and the outer boom section when the booms are in the transport position.

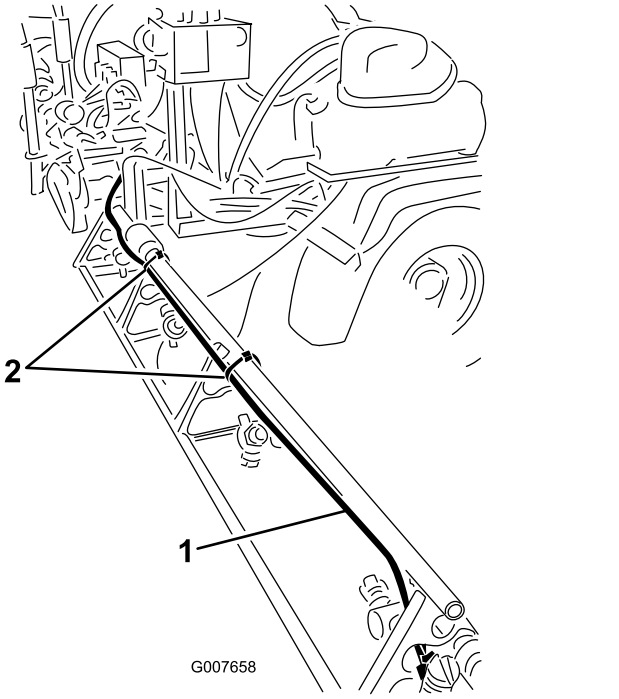

Figure 14

1. Tube assembly (right boom section shown)
2. Cable ties

5. Secure the tube assembly to the hole in the nozzle support with a cable tie as shown in Figure 15.

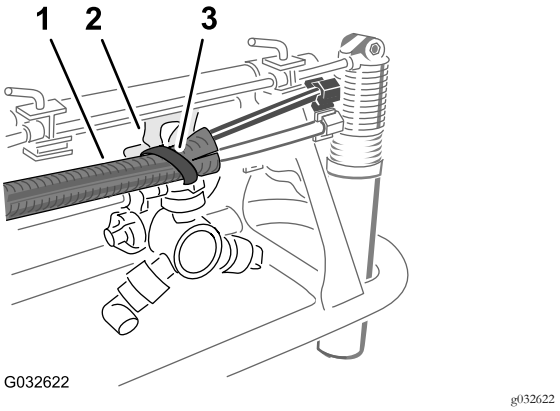

Figure 15

1. Tube assembly
2. Nozzle support
3. Cable tie

6. Secure the tube assembly to the outer boom section with cable ties as shown in Figure 14.

7. Loosely secure the free end of the tube assembly to the outer boom section.
8. Repeat steps 1 through 6 for the tube assembly at the other side of the machine.

5

Disconnecting the Optional Ultra Sonic Boom Kit

No Parts Required

Disconnecting the Wire Harness at the Lift-Cylinder Manifold

Optional Ultra Sonic Boom Kit

1. Disconnect the 2-pin connector of the sonic boom wire harness from the 2-pin connector of the right cylinder-enable solenoid of the lift-cylinder manifold (Figure 16).

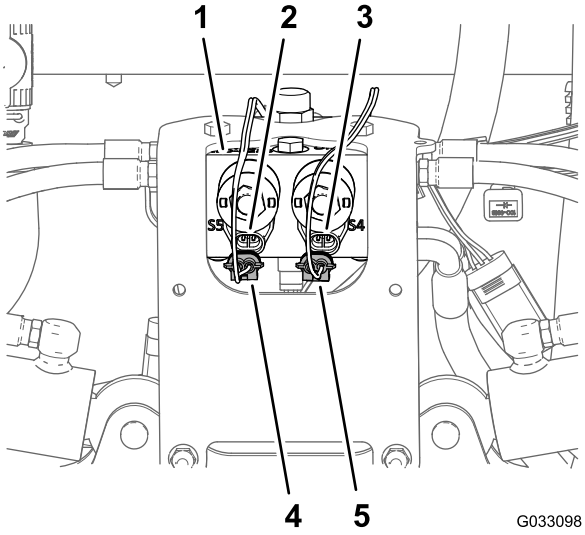

Figure 16

1. Lift-cylinder manifold
2. 2-pin connector (lift-cylinder manifold—left cylinder enable)
3. 2-pin connector (lift-cylinder manifold—right cylinder enable)
4. 2-socket connector (sonic boom wire harness—left cylinder enable)
5. 2-socket connector (sonic boom wire harness—right cylinder enable)

2. Disconnect the 2-pin connector of the sonic boom wire harness from the 2-pin connector of the left cylinder-enable solenoid of the lift-cylinder manifold (Figure 16).
3. Disconnect the 2-socket connectors of the wire harness for the sonic boom finishing kit (Figure 17) from the 2-pin connectors of the solenoids of the lift-cylinder manifold as follows:

   Note: Do not remove the sonic boom wire harness from the machine.

   - Left boom section up
   - Right boom section up
   - Left boom section down
   - Right boom section down

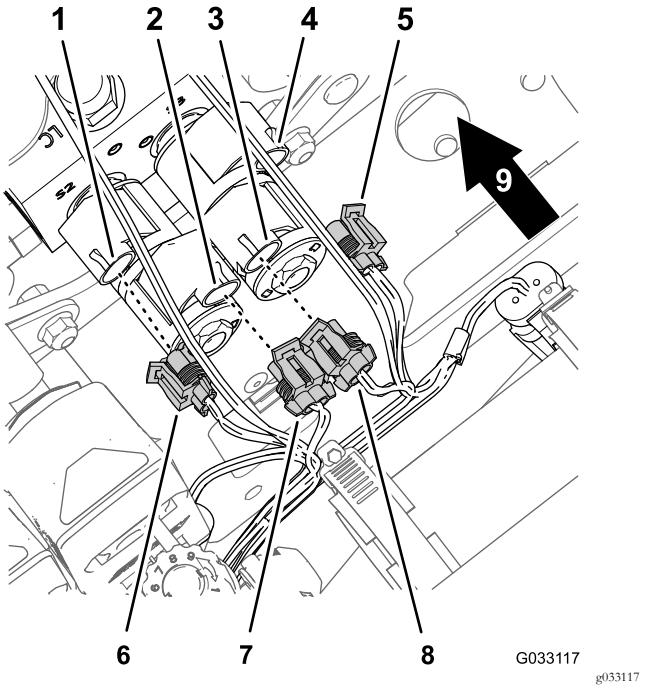

Figure 17

1. 2-pin connector (lift-cylinder manifold—left boom section down)
2. 2-pin connector (lift-cylinder manifold—left boom section up)
3. 2-pin connector (lift-cylinder manifold—right boom section up)
4. 2-pin connector (lift-cylinder manifold—right boom section down)
5. 2-socket connector (wire harness for the sonic boom finishing kit—right boom section down)
6. 2-socket connector (wire harness for the sonic boom finishing kit—left boom section down)
7. 2-socket connector (wire harness for the sonic boom finishing kit—left boom section up)
8. 2-socket connector (wire harness for the sonic boom finishing kit—right boom section up)
9. Back of the machine

Disconnecting the Ultra-Sonic Sensor Cable from the Wire Harness

1. Disconnect the 3-socket connector of the sonic boom wire harness from the 3-pin connector of the cable for the right ultra-sonic sensor (Figure 18)

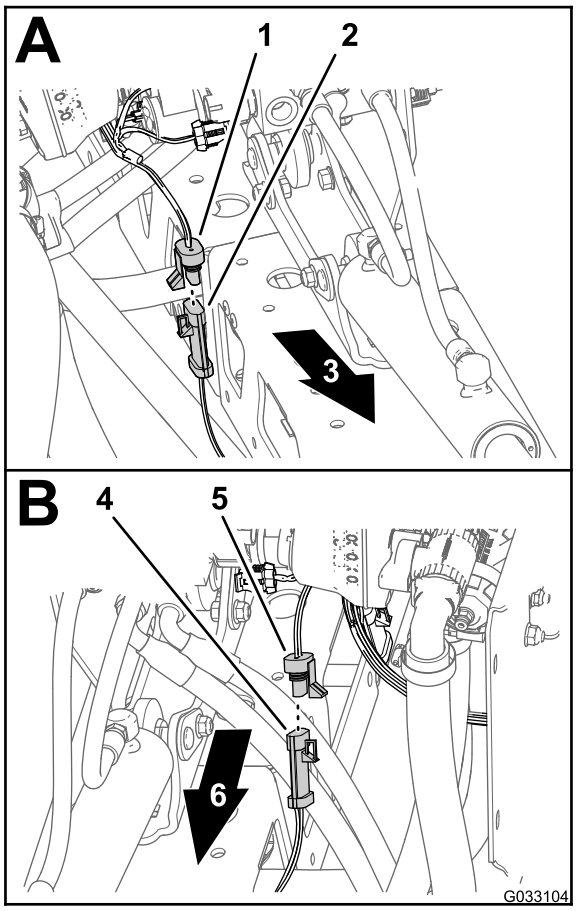

g033104

Figure 18

1. 3-socket connector (sonic boom wire harness—right sensor)
2. 3-pin connector (cable—right ultra-sonic sensor)
3. Right side of the machine
4. 3-pin connector (cable—left ultra-sonic sensor)
5. 3-socket connector (sonic boom wire harness—left sensor)
6. Left side of the machine

2. Disconnect the 3-socket connector of the sonic boom wire harness from the 3-pin connector of the cable for the left ultra-sonic sensor (Figure 18)
3. Bundle the cables for the ultra-sonic sensors to the left and right boom sections.

   Note: Do not remove the sonic boom wire harness from the machine.

6

Removing the Center Section Cover (11-nozzle) of the Optional Covered-Boom Kit

No Parts Required

Procedure

1. While supporting the center section cover (11–nozzle), remove the 4 flange-head bolts (5/16 x 1-1/4 inches) and 2 cover straps that secure the cover to the cover-support bracket (Figure 19).

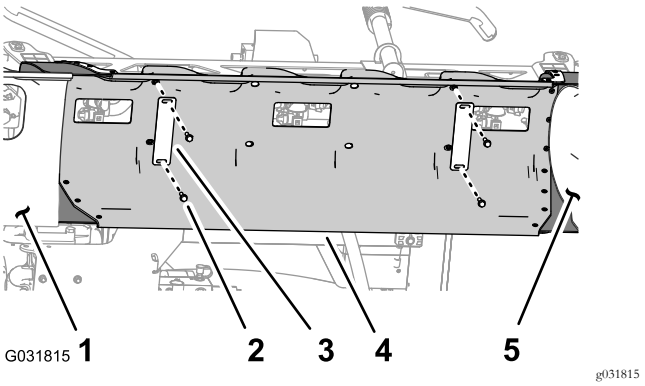

g031815

Figure 19

1. Boom-section cover (left)
2. Flange-head bolt (5/16 x 1-1/4 inches)
3. Cover strap
4. Center section cover
5. Boom-section cover (right)

2. Remove the center section cover from the machine (Figure 20).

   Note: Retain the cover for assembly, cover straps, and flange-head bolts for installation in steps 1 and 2 of Installing the Center Section Cover (page 81).

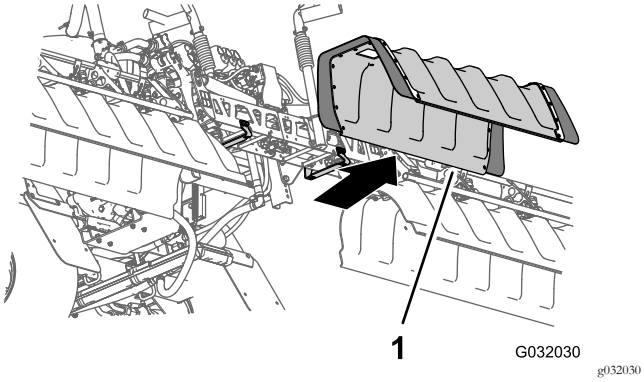

Figure 20

1. Center section cover

7

Removing the Undercarriage Shroud

No Parts Required

Procedure

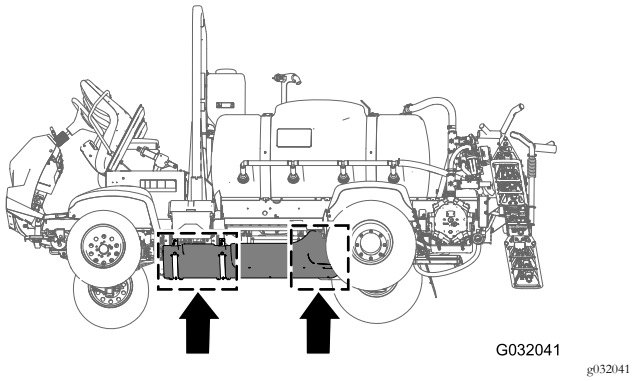

Figure 21

1. Remove the 7 flange-head bolts (5/16 x 7/8 inch) and 7 washers (5/16 inch) that secure the rear of the undercarriage shroud to the chassis of the machine (Figure 22).

   Note: Retain the flange-head bolts and washers for installation in step 5 of 24 Installing the Undercarriage Shroud (page 54).

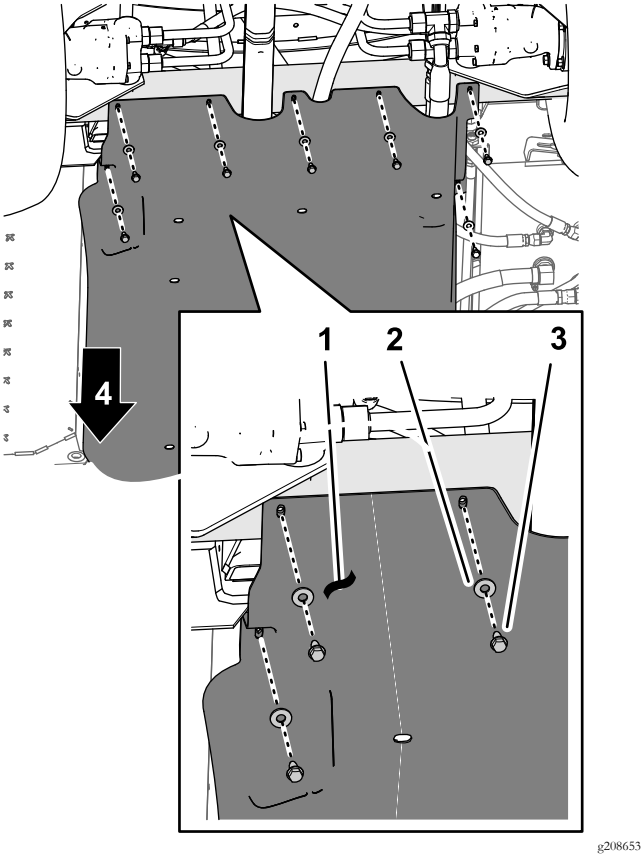

Figure 22

1. Undercarriage shroud
2. Washers (5/16 inch)
3. Flange-head bolts (5/16 x 7/8 inch)
4. Front of the machine

2. Remove the 4 flange locknuts (5/16 inch) from the bolts and carriage bolt that secure the support straps of the undercarriage shroud to the engine-mount brackets of the machine (Figure 23).

   Note: Do not remove the bolts from the machine. Retain the flange locknuts for installation in step 3 of 24 Installing the Undercarriage Shroud (page 54).

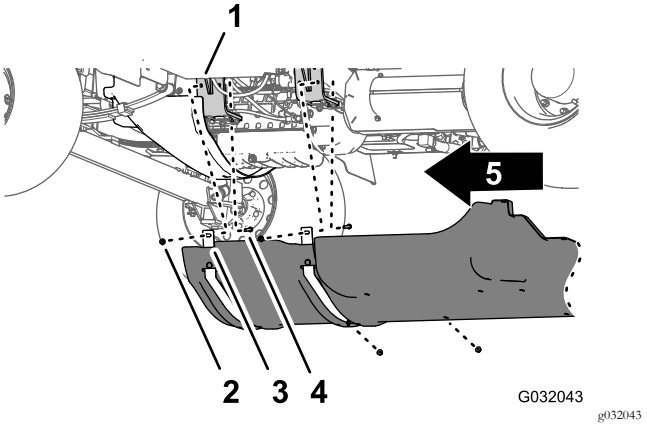

Figure 23

1. Engine mount
2. Bolt—shown for clarity; do not remove
3. Support straps (undercarriage shroud)
4. Flange locknuts (5/16 inch)
5. Front of the machine

3. Lift the support straps over the bolts that secure the undercarriage shroud to the engine-mount brackets.
4. Remove the undercarriage shroud from the machine (Figure 22 and Figure 23).

8

Removing the Engine-Control Module and Mounting Bracket (for Machines with a Gasoline Engine Only)

No Parts Required

Procedure

1. Remove the 3 flange-head bolts and 1 flange nut that secure the mounting bracket for the engine-control module to the support bracket of the engine and accessory case of the engine (Figure 24).

   Note: Retain the flange-head bolts and flange nut for installation in step 2 of 23 Installing the Engine-Control Module and Mounting Bracket (Machines with a Gasoline Engine Only) (page 53).

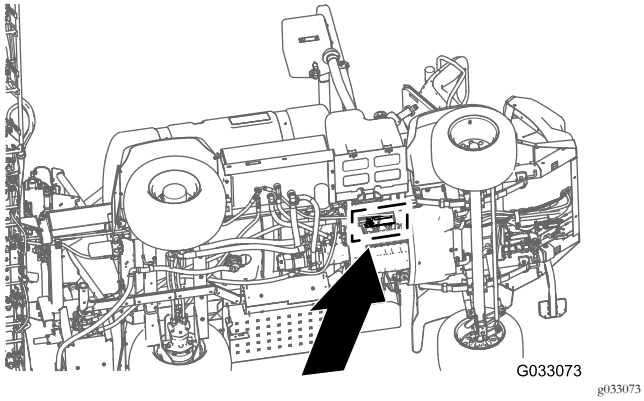

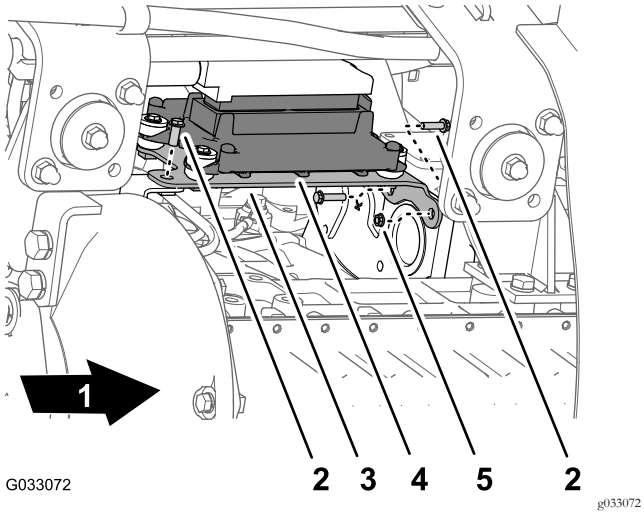

Figure 24

1. Front of the machine
2. Flange-head bolt
3. Mounting bracket
4. Engine-control module
5. Flange nut

2. Move the engine-control module and mounting bracket down and rearward to provide access to the connectors of the front and rear wiring harnesses for the machine.

   Note: Do not remove the disconnect the engine-control module from the engine.

9

Disconnecting the Pressure-Sense Tube for the Dash Gauge

No Parts Required

Disconnecting the Pressure-Sense Tube for the Dash Gauge

Machines Without an Optional Hose Reel Kit

Note: If your machine is equipped with an optional spray gun kit, refer to Disconnecting Pressure-Sense Tube and Supply Hose (page 17).

1. Press in the collar for the tube coupler in the end cap of the right boom-section valve (Figure 25).

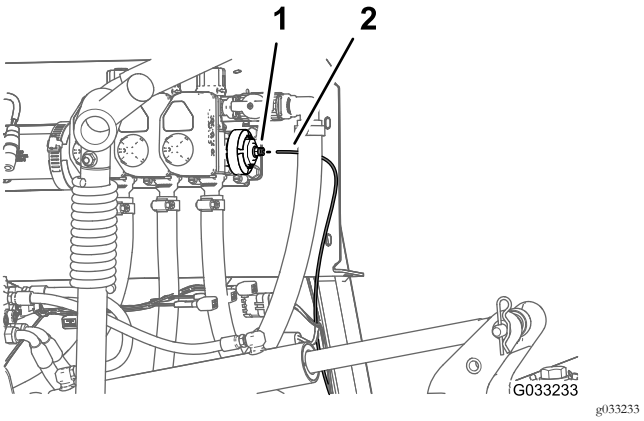

Figure 25

1. Tube coupler (end cap of the right boom-section valve)
2. Pressure-sense tube

2. Pull the pressure-sense tube for the dash gauge out of the tube coupler (Figure 25).

Disconnecting Pressure-Sense Tube and Supply Hose

Optional Spray Gun Kit or Optional Pivoting Hose Reel Kit

1. Press in the collar for the tube coupler in the 90° elbow of the right boom-section valve (Figure 26 or Figure 27).

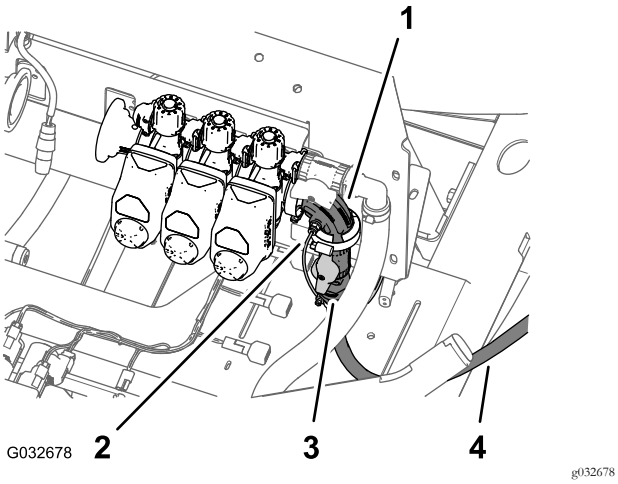

Figure 26
Optional Spray Gun Kit

1. 90° elbow (right boom-section valve)
2. Pressure-sense tube (dash-pressure gauge)
3. Shutoff valve (spray gun)
4. Supply hose (spray gun)

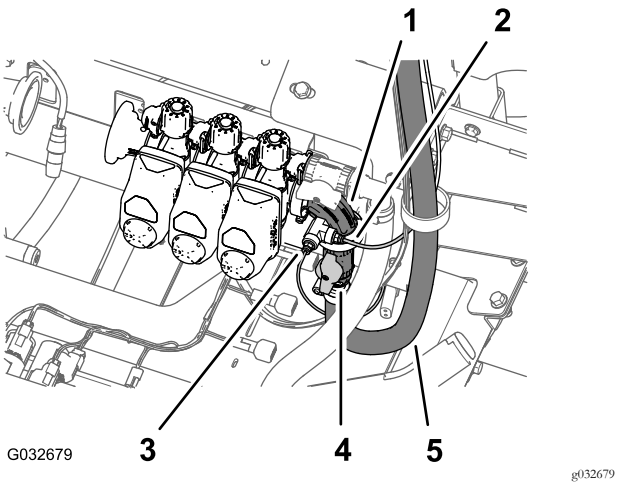

Figure 27
Optional Pivoting Hose Reel Kit

1. 90° elbow (right boom-section valve)
2. Pressure-sense tube (hose reel pressure gauge)
3. Pressure-sense tube (dash-pressure gauge)
4. Shutoff valve (pivoting-hose reel)
5. Supply hose (pivoting-hose reel)

2. Pull the pressure-sense tube for the dash gauge out of the tube coupler (Figure 26 or Figure 27).

Note: Do not remove the 90° elbow for the shutoff valve for the supply hose of the hose reel from the flange of the right boom-section valve.

10

Removing the Rear Wire Harness for the Machine

Parts needed for this procedure:

1	Rear wire harness

Disconnecting the Front and Rear Wire Harnesses

Note: Use a machine hoist when disconnecting the front and rear wire harnesses.

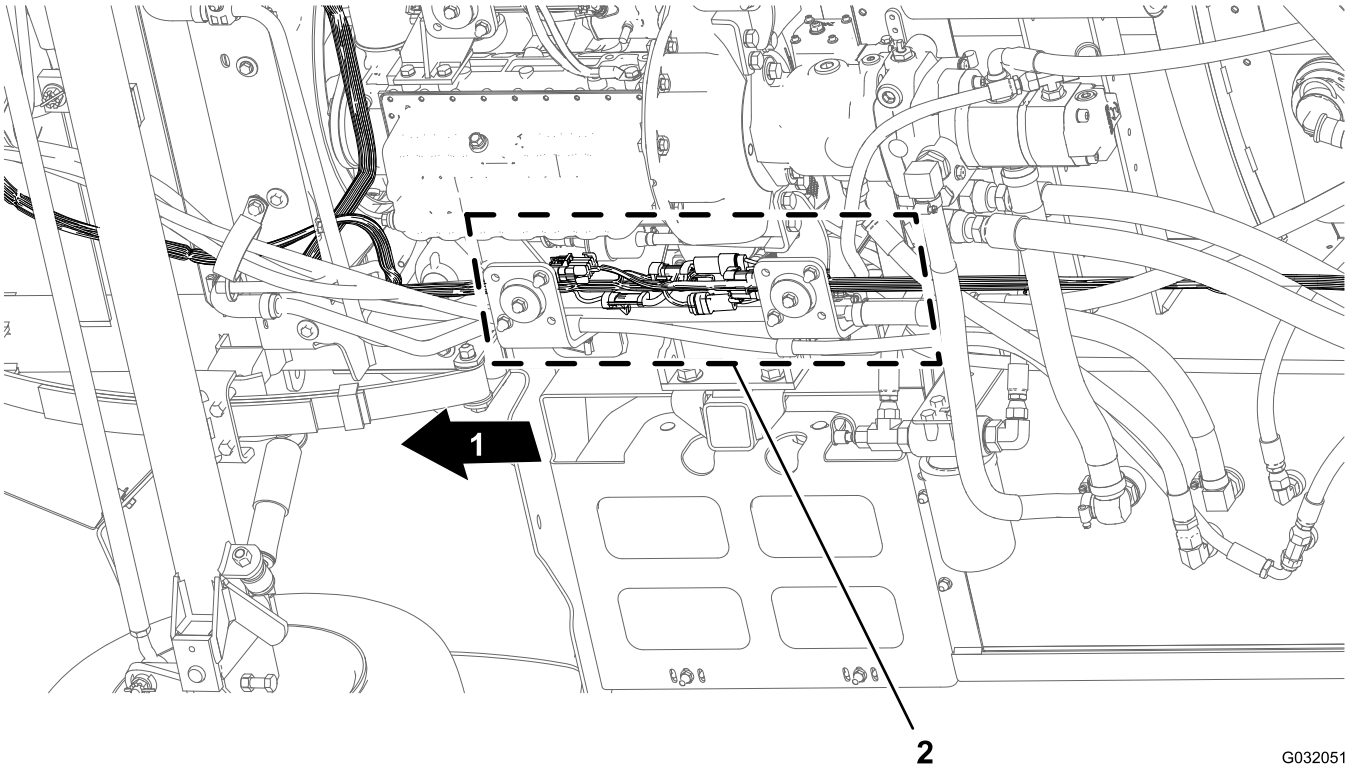

Figure 28

1. Front of the machine
2. Connector interfaces (front and rear wire harnesses)

1. From under the machine along the right frame tube, locate the electrical connectors for the front and rear wire harnesses of the machine (Figure 28).
2. Disconnect the 6 pairs of connectors between the front and rear wire harnesses as shown in figures Figure 29 through Figure 34.

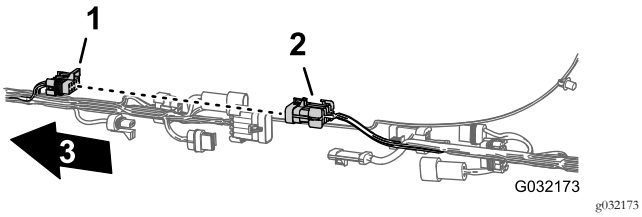

Figure 29

1. 10-socket connector—sprayer-harness interconnect (front harness)
2. 10-pin connector—sprayer-harness interconnect (rear harness)
3. Front of the machine

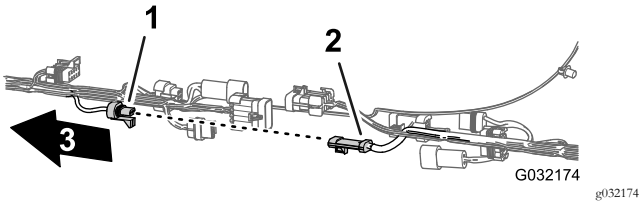

Figure 30

1. 3-socket connector—flow meter (front harness)
2. 3-pin connector—flow meter (rear harness)
3. Front of the machine

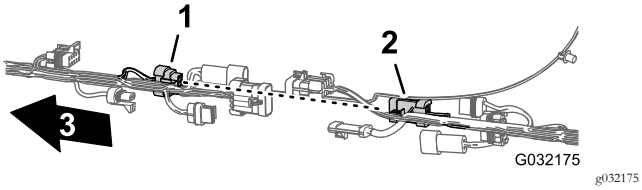

Figure 31

1. 8-socket connector—sprayer-harness interconnect (front harness)
2. 8-pin connector—sprayer-harness interconnect (rear harness)
3. Front of the machine

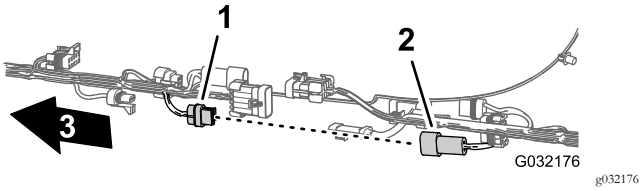

Figure 32

1. 2-socket connector—rinse pump (front harness)
2. 2-pin connector—rinse pump (rear harness)
3. Front of the machine

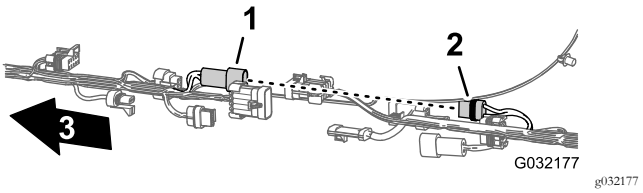

Figure 33

1. 2-pin connector—hose reel (front harness)
2. 2-socket connector—hose reel (rear harness)
3. Front of the machine

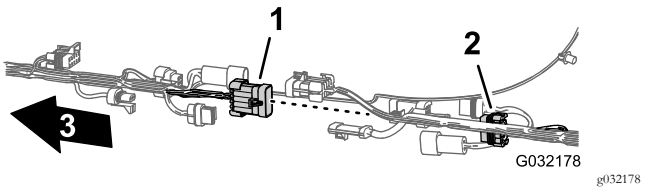

Figure 34

1. 10-pin connector—sprayer-harness interconnect (front harness)
2. 10-socket connector—sprayer-harness interconnect (rear harness)
3. Front of the machine

3. Remove the 3 fir-tree anchors that secure the rear wire harness to the holes in the right frame tube of the machine (Figure 35).

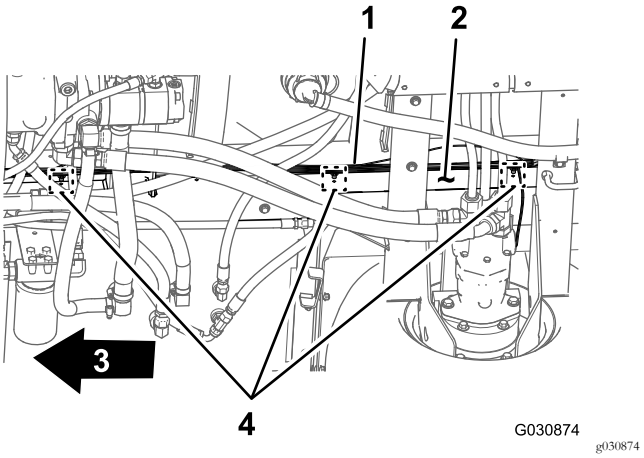

Figure 35

1. Rear wire harness
2. Right frame tube
3. Front of the machine
4. Fir-tree anchors

Disconnecting the Connectors for the Components

1. At back of the machine (between the right frame tube and the right fender) disconnect the 3-pin connector of the speed-sensor harness at the right hydraulic-traction motor from the 3-socket connector of the rear, main harness (Figure 36).

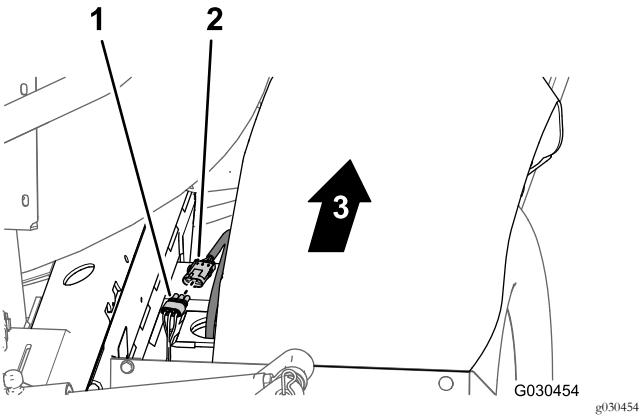

Figure 36

1. 3-socket connector (rear, main harness)
2. 3-pin connector (hydraulic-motor harness
3. Front of the machine

2. At the back of the manifold mount, disconnect the 3-socket connector from the agitation valve and the 3-socket connectors from the 3 boom-section valves (Figure 37).

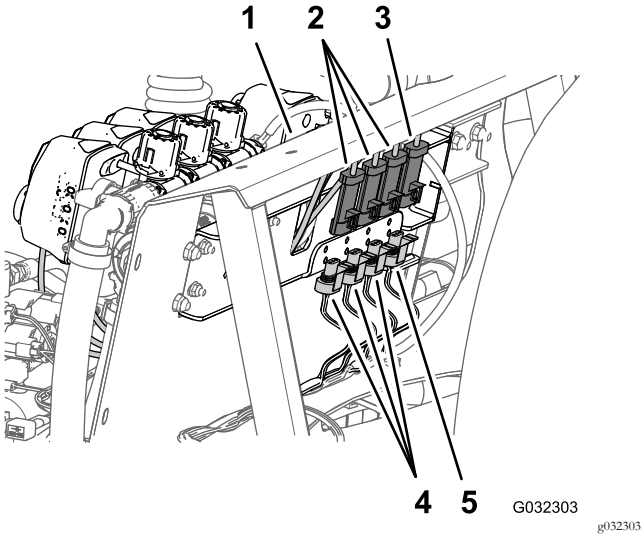

Figure 37

1. Manifold mount
2. 3-socket connectors (boom-section valve harnesses)
3. 3-socket connector (agitation valve harness)
4. 3-pin connectors (machine wire harness—rear)
5. 3-pin connector (machine wire harness—rear)

3. Remove the fir-tree anchors that secure the rear wire harness to the holes at the forward side and lower plate of the manifold mount (Figure 38).

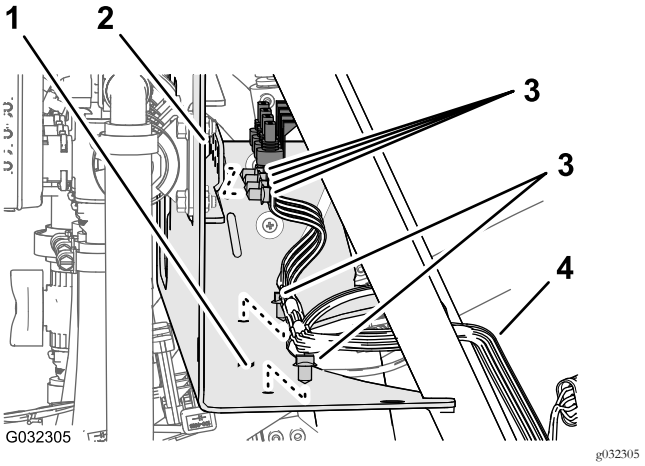

Figure 38

1. Manifold mount (lower plate)
2. Manifold mount (forward side)
3. Fir-tree anchor
4. Rear wire harness

4. At the back of the machine, disconnect the following 2-socket connectors (Figure 39) for the lift-cylinder manifold as follows:

Note: For machines to the ultra sonic boom kit; refer to Disconnecting the Wire Harness at the Lift-Cylinder Manifold (page 12).

- Right—up solenoid
- Left—up solenoid
- Enable solenoid
- Right—down solenoid
- Left—down solenoid

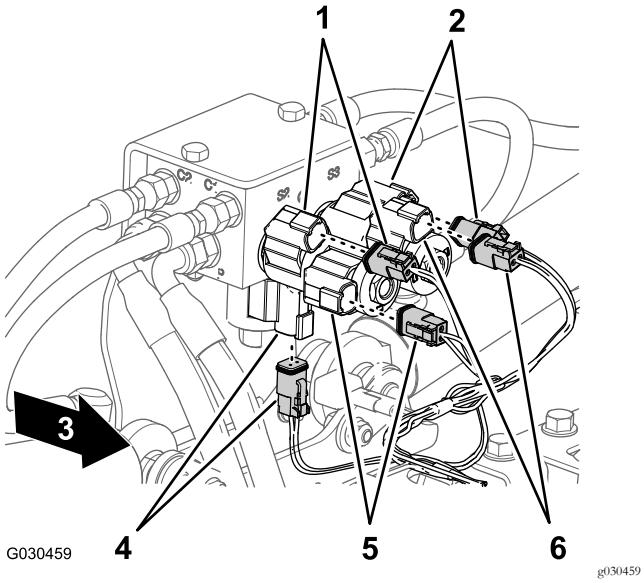

Figure 39

1. Right—up (solenoid and main-harness connector)
2. Left—up (solenoid and main-harness connector)
3. Front of the machine
4. Enable (solenoid and main-harness connector)
5. Right—down (solenoid and main-harness connector)
6. Left—down (solenoid and main-harness connector)

5. At the back of the machine—inboard of the sprayer pump, disconnect the 2-socket connector of the rear, main harness from the 2-pin connector of the relay for the pump (Figure 40).

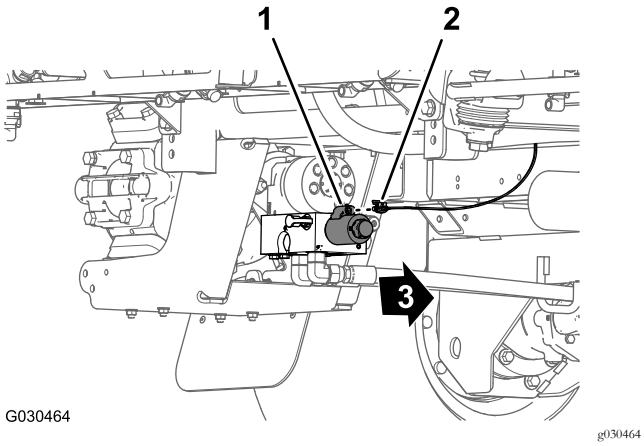

Figure 40

1. 2-pin connector (pump relay)
2. 2-socket connector (rear, main harness)
3. Front of the machine

6. Remove the fir-tree anchor that secures the rear wire harness (Figure 41) to the holes in the rear cross tube (rearward of the hydraulic-traction motors).

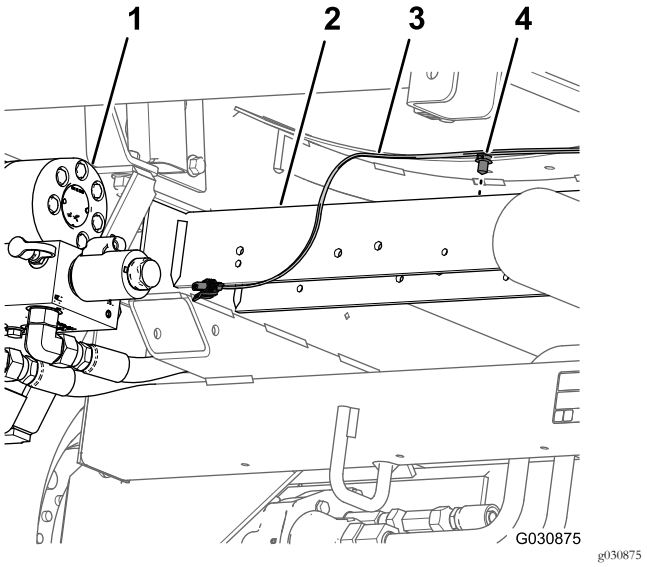

Figure 41

1. Sprayer pump
2. Rear cross tube
3. Rear wire harness
4. Fir-tree anchor

7. Remove the pressure-sense tube for the dash gauge from the rear wire harness from the machine (Figure 42).

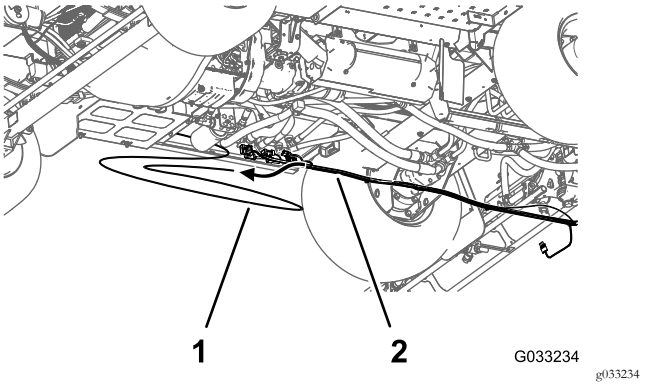

Figure 42

1. Pressure-sense tube (dash gauge)
2. Rear wire harness

8. Remove the rear wire harness from the machine.

Note: You no longer need the rear main harness that you removed from the machine.

11

Removing the Rate-Control Switch

Parts needed for this procedure:

1	Cable tie
1	Switch plug

Procedure

1. From under the dash panel of the machine, squeeze the lock tabs of the rate-control switch together and push up the rate-control switch out of the dash panel (Figure 43).

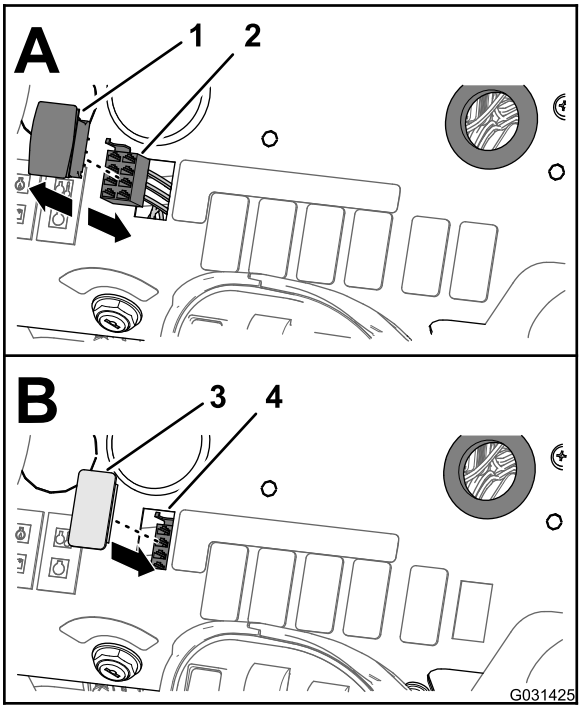

g031425

Figure 43

1. Rate-control switch
2. 8-socket connector (front harness)
3. Switch plug
4. Opening (dash panel)

2. Disconnect the 8-socket connector of the front harness of the machine (labeled RATE SWITCH) from the 8-pin connector of the switch (Figure 43).

   Note: You no longer need the rate switch that you removed from the machine.

3. Route the branch of the front harness for the rate switch through the opening in the dash and secure the wiring branch against the front harness with a cable tie.

4. Align the switch plug to the opening in the dash panel where you removed the rate switch (Figure 43).

5. Insert the switch plug into the dash panel until the plug snaps into the panel securely (Figure 43).

12

Removing the Boom-Section Valves

Parts needed for this procedure:

3	Cap (quick coupler)
3	Retainer

Removing the Connector Tube and Reducer Adapter

1. Loosen the 4 flange-head bolts (1/4 x 3/4 inch) and 4 flange locknuts (1/4 inch) that secure the 3 section valves to the manifold mount (Figure 44).

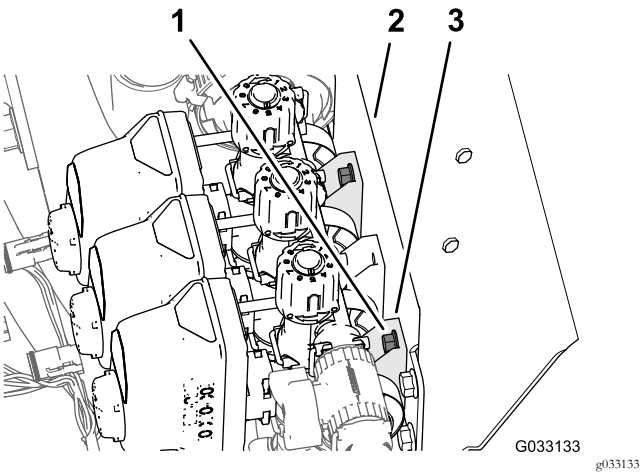

g033133

Figure 44

1. Flange-head bolts (1/4 x 3/4 inch)
2. Valve housing (section valve)
3. Manifold mount

2. Remove the 2 flange clamps that secure the straight coupler to the adapter couplers at the agitation valve and left boom-section valve (Figure 45).

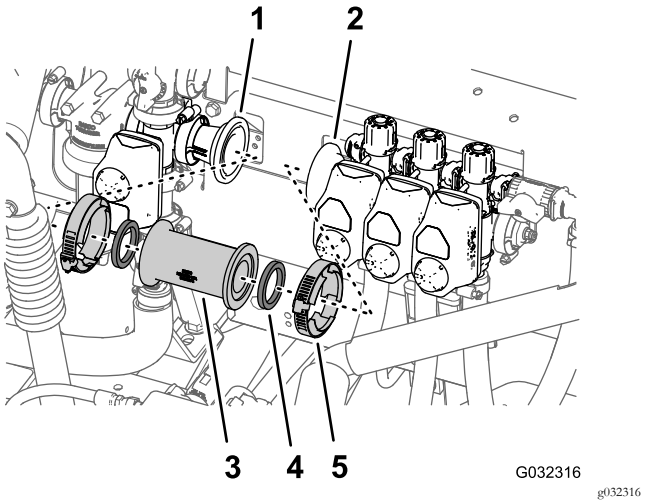

Figure 45

1. Adapter coupling (at the agitation valve)
2. Adapter coupling (at the left boom-section valve)
3. Straight coupling
4. Gasket
5. Flange clamp

3. Remove the straight coupler and 2 gaskets from the machine (Figure 45).

   Note: Retain clamps and gaskets for installation in step 2 of Assembling the Flow Meter and Pressure Transducer (page 36) and steps 1 and 2 of Installing the Flow Meter and Pressure Transducer onto the Machine (page 37).

4. Remove the flange clamp 76 mm (3 inches) that secures the reducer adapter and gasket (2-1/4 inches) to the flange of the left boom-section valve, and remove the adapter, clamp and gasket from the machine (Figure 46).

   Note: Retain reducer adapter, flange clamp and gasket for installation in steps 4 and 3 of Assembling the Flow Meter and Pressure Transducer (page 36).

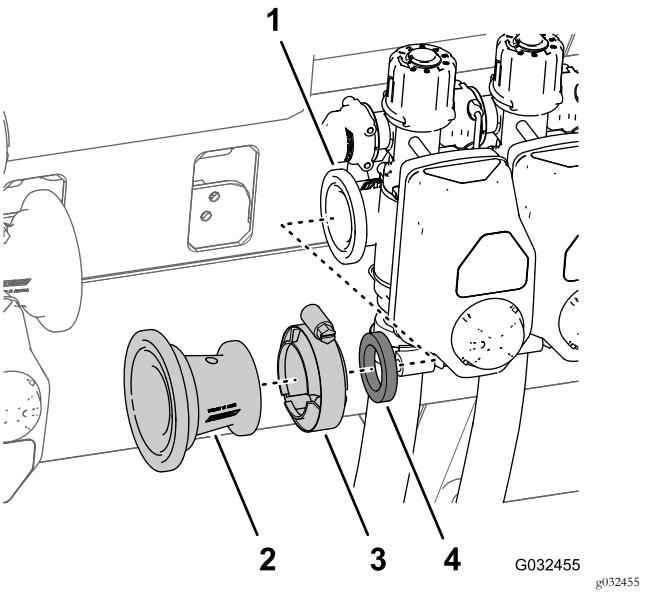

Figure 46

1. Flange (left boom-section valve)
2. Reducer adapter
3. Flange clamp 76 mm (3 inches)
4. Gasket

Removing the Boom-Section Hoses

1. At the outer boom section, remove the hose clamp that secures the supply hose for the boom section to the barbed T-fitting (Figure 47).

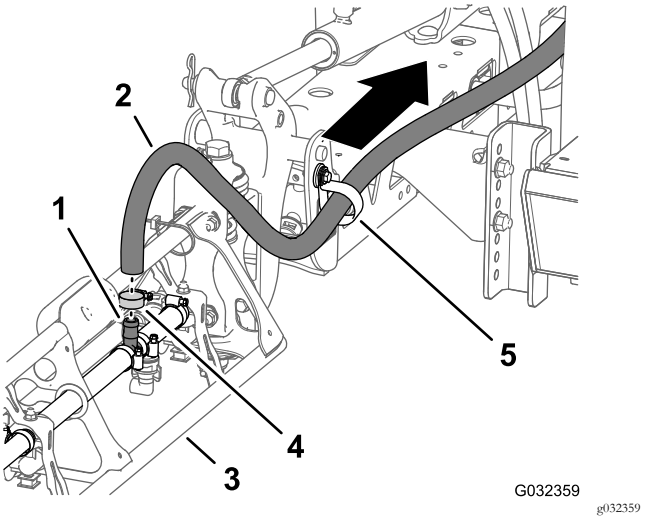

Figure 47

1. Barbed T-fitting
2. Supply hose (outer boom section)
3. Outer boom section
4. Hose clamp
5. R-clamp

2. Remove the hose from the T-fitting (Figure 47).
3. Remove the free end of the hose from the R-clamp (Figure 47).

4. Repeat steps 1 through 3 for the supply hose at the other outer boom section.
5. Under the center boom section, remove the hose clamp that secures the supply hose for the boom section to the barbed T-fitting (Figure 48).

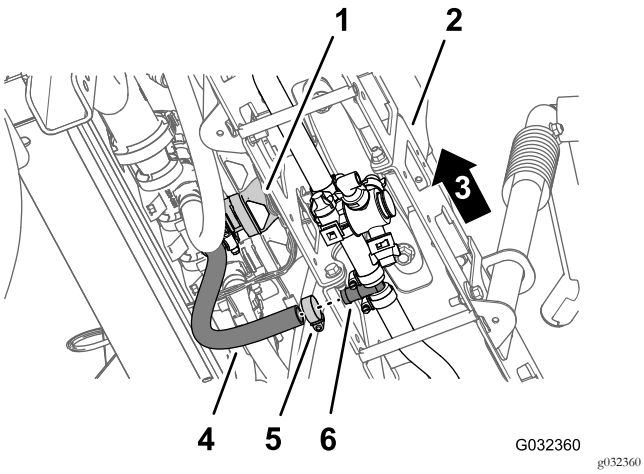

Figure 48

1. Center boom-section valve
2. Center boom section
3. Left side of the machine
4. Hose (center boom section)
5. Hose clamp
6. Barbed T-fitting

6. Remove the retainers that secure the straight barbed fittings to the left, center, and right boom-section valves (Figure 49).

   Note: Retain the retainers for installation in Assembling the Hoses to Nozzle Valves 7 through 10 (page 48).

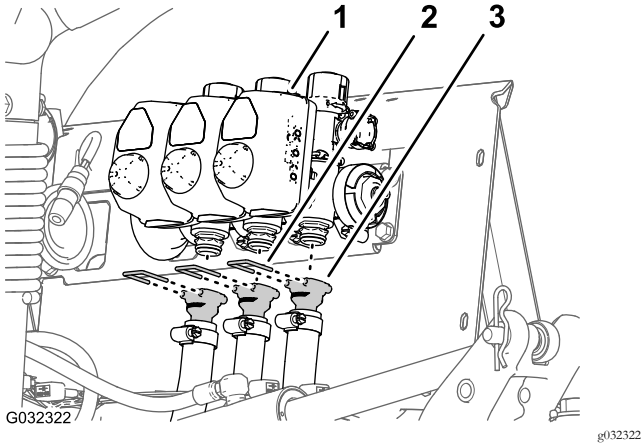

Figure 49

1. Boom-section valve
2. Retainer
3. Straight barbed fitting

7. Remove the hoses for the left, center, and right boom-section valves from the machine (Figure 49).

   Note: You no longer need the hoses for the left, center, and right boom-section valves.

Removing the Shutoff Valve and Bypass Hoses

1. At the lower end of the upper bypass hose, remove the flange-head bolt (5/16 x 3/4 inch), washer (5/16 inch), and R-clamp that secures the upper bypass hose to the rear saddle plate of the machine (Figure 50 and Figure 51).

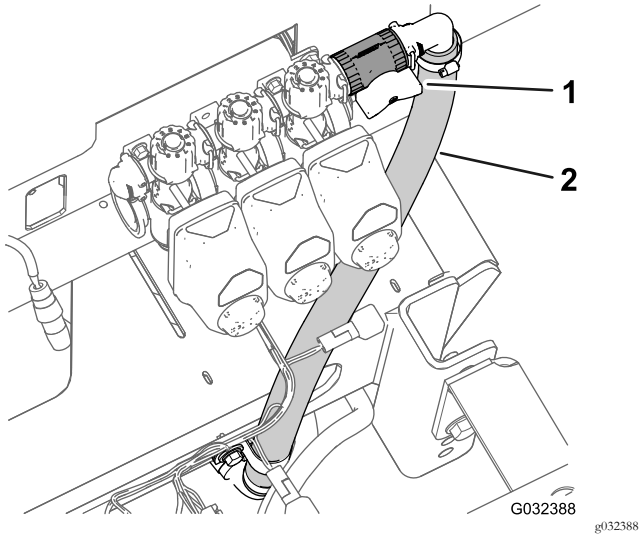

Figure 50

1. Shutoff valve
2. Upper bypass hose

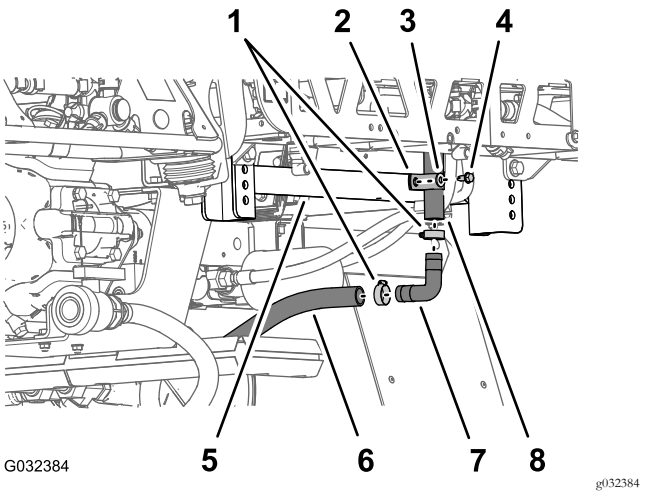

Figure 51

1. Hose clamp
2. R-clamp
3. Washer (5/16 inch)
4. Flange-head bolt (5/16 x 3/4 inch)
5. Rear saddle plate (chassis frame)
6. Lower bypass hose
7. 90° barbed fitting
8. Upper bypass hose

2. Remove the 2 hose clamps that secure the upper bypass hose and the lower bypass hose to the 90° barbed fitting (Figure 51).
3. Remove the 90° barbed fitting from the hoses (Figure 51).

Note: Retain the 90° barbed fitting and 2 clamps for installation in steps 8 and 9.

4. Remove the hose clamps that secure the drain-valve hose and the rear tank-drain hose to the barbed T-fitting (Figure 52).

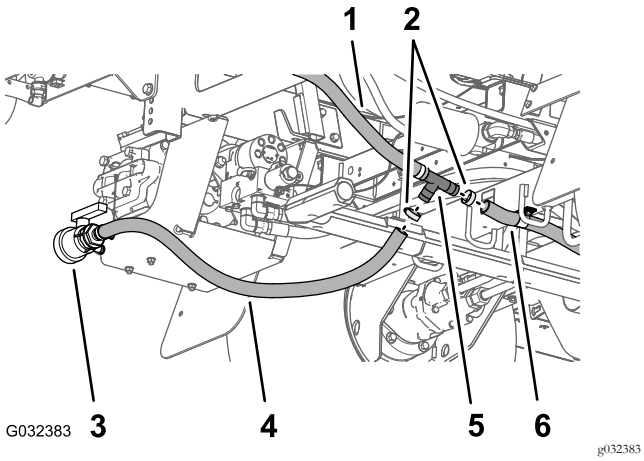

Figure 52

1. Lower bypass hose
2. Hose clamp
3. Drain valve
4. Drain-valve hose
5. Barbed T-fitting
6. Rear tank-drain hose

5. Remove the T-fitting from the drain-valve hose and the rear tank-drain hose (Figure 51).

6. Remove the retainer that secures the shutoff valve to the coupler fitting at the outboard side of the bypass valve for the right boom-section valve, and separate the valves (Figure 53).

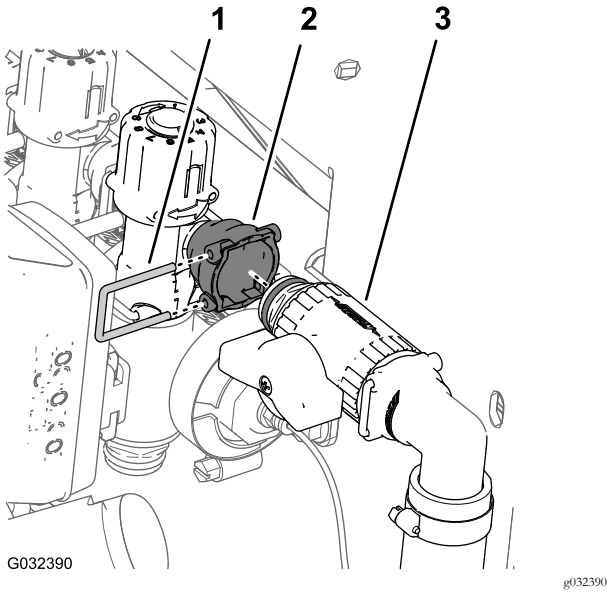

Figure 53

1. Retainer
2. Coupler fitting (bypass valve)
3. Shutoff valve

7. Remove the upper and lower bypass hoses from the machine (Figure 54).

Note: You no longer need the shutoff valve, T-fitting, upper bypass hose, and lower bypass hose.

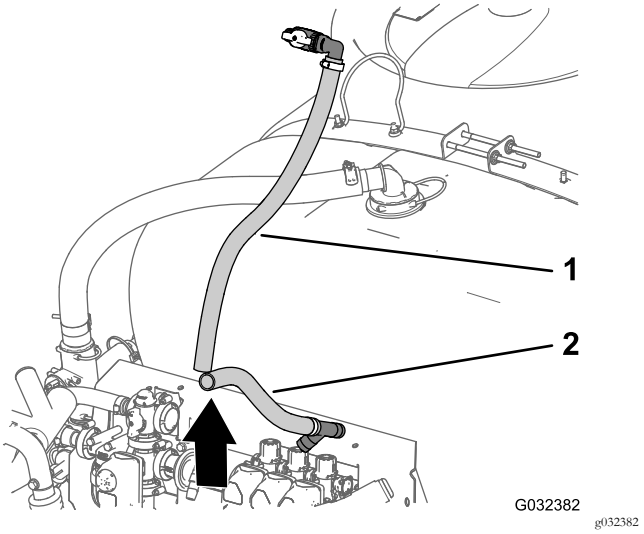

Figure 54

1. Upper bypass hose
2. Lower bypass hose

8. Insert the 90° barbed fitting that you removed in step 3 into the drain-valve hose and the rear tank-drain hose (Figure 55).

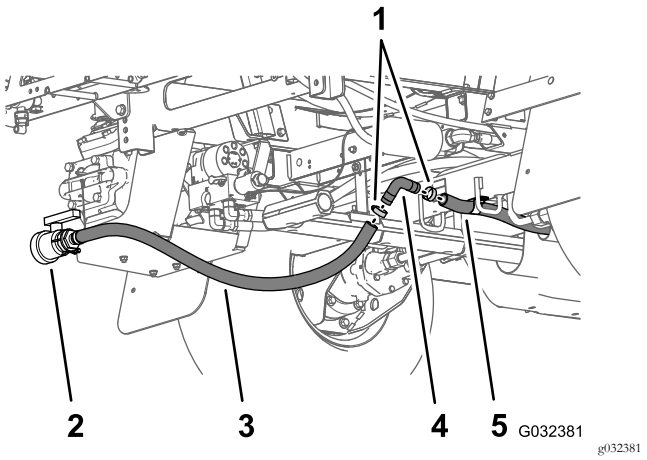

Figure 55

1. Hose clamp
2. Drain-valve hose
3. Drain valve
4. 90° barbed fitting
5. Rear tank-drain hose

9. Secure the 90° barbed fitting and drain hoses with the 2 hose clamps that you removed in step 2 (Figure 55).

Removing the Valve Actuator

1. Remove the retainer that secures the a actuator to the manifold valve of the section valve assembly(Figure 56).

   Note: Squeeze the 2 legs of the retainer together while pushing it down.

   Note: Retain the actuator and retainer for installation in steps 6 and 7 of Replacing the Bypass Valves from the Section Valves with Caps (page 26).

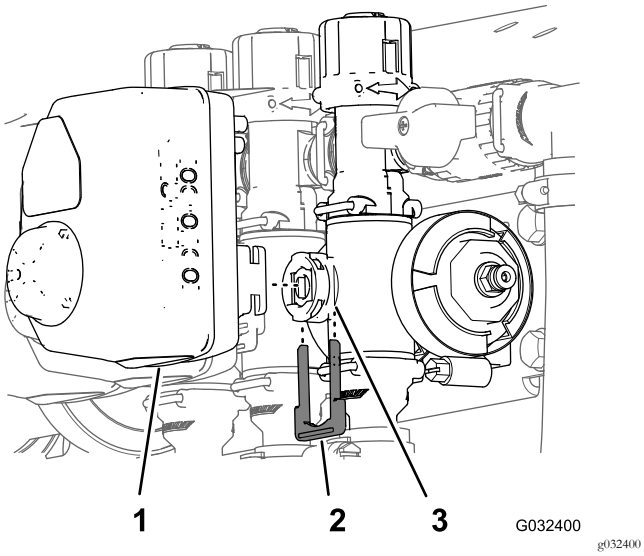

Figure 56

1. Actuator (section valve)
2. Retainer
3. Stem port (manifold valve)

2. Remove the actuator from the manifold valve (Figure 56).
3. Repeat steps 1 and 2 for the 2 other valve actuators.

Replacing the Bypass Valves from the Section Valves with Caps

1. Remove the 3 retainers that secure the 3 bypass valves to the 3 manifold valves (Figure 57).

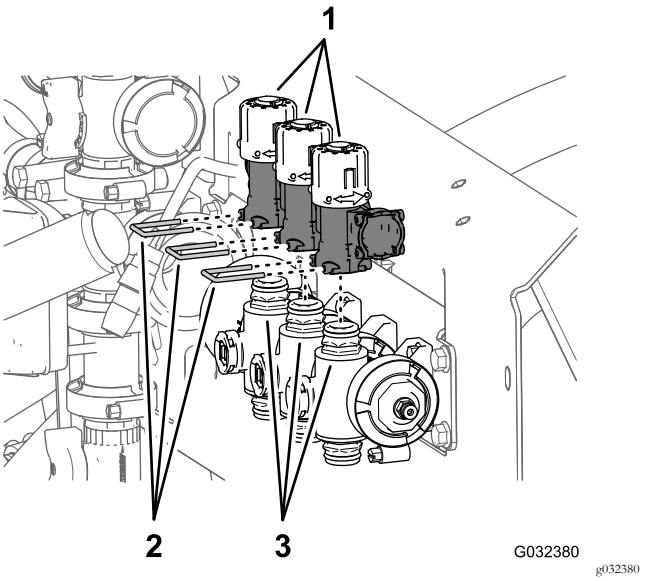

Figure 57

1. Bypass valves
2. Retainers
3. Quick couplers (manifold valves)

2. Lift the 3 bypass valves from the 3 quick couplers of the manifold valves (Figure 57).

   Note: You no longer need the bypass valves.

3. Lubricate the upper and lower O-rings on the quick coupler of the manifold valve with the grease provided with the quick-coupler cap (Figure 58).

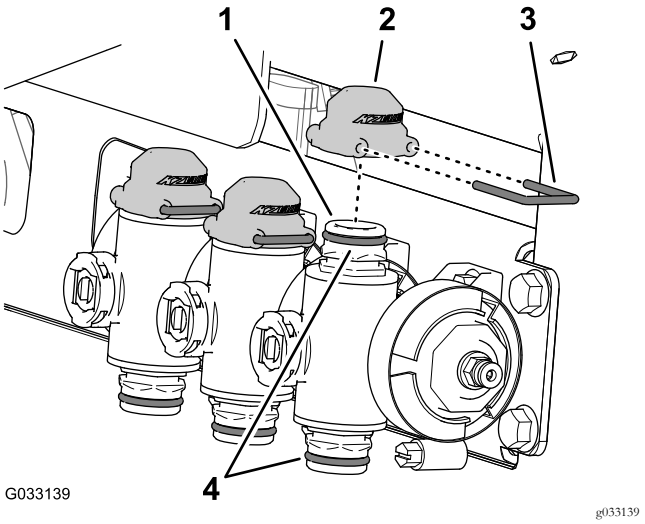

Figure 58

1. Quick coupler (manifold valve)
2. Cap (quick coupler)
3. Retainer
4. O-rings

4. Assemble the 3 caps for the quick couplers onto the 3 quick couplers for the manifold valves (Figure 58).
5. Secure the 3 caps to the 3 quick couplers with the 3 retainers (Figure 58).

6. Align the coupler of the section valve actuator that you removed in step 2 of Removing the Valve Actuator (page 26) with the stem port of the manifold valve (Figure 59).

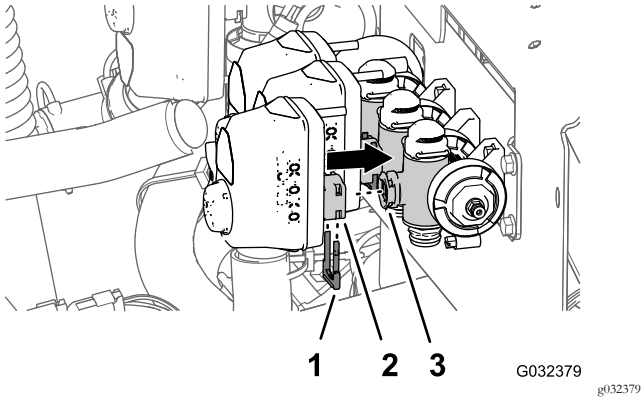

Figure 59

1. Retainer
2. Coupler (section-valve actuator)
3. Stem port (manifold valve)

7. Secure the section valve actuator to the manifold valve with a retainer (Figure 59) that you removed in step 1 of Removing the Valve Actuator (page 26).

Disassembling the Boom-Section Valves from the Manifold Mount

Note: You will add the boom-section valves to the valves for the 10-valve system in Assembling Sprayer Valves 8, 9, and 10 to the Valve Mount (page 40).

1. Remove the 2 flange-head bolts (1/4 x 3/4 inch) and 2 locknuts (1/4 inch) that secure the right boom-section valve to the manifold mount (Figure 60).

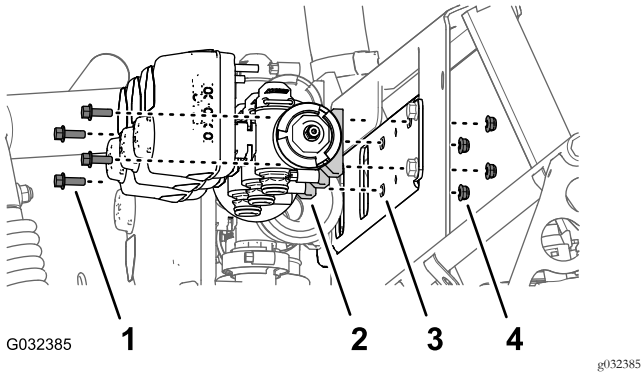

Figure 60

1. Flange-head bolt (5/16 x 3/4 inch)
2. Boom-section valve
3. Manifold mount
4. Locknut (1/4 inch)

2. Remove the 2 flange-head bolts (1/4 x 3/4 inch) and 2 locknuts (1/4 inch) that secure the left boom-section valve to the manifold mount (Figure 60).

3. Remove the boom-section valves from the manifold mount and set aside the valves (Figure 60).

Note: Retrain the boom-section valves, flange-head bolts, and locknuts for installation in steps 1 of Assembling Sprayer Valves 8, 9, and 10 to the Valve Mount (page 40).

4. Remove the 3 boom valve decals and the 3 bypass adjustment decals (Figure 61).

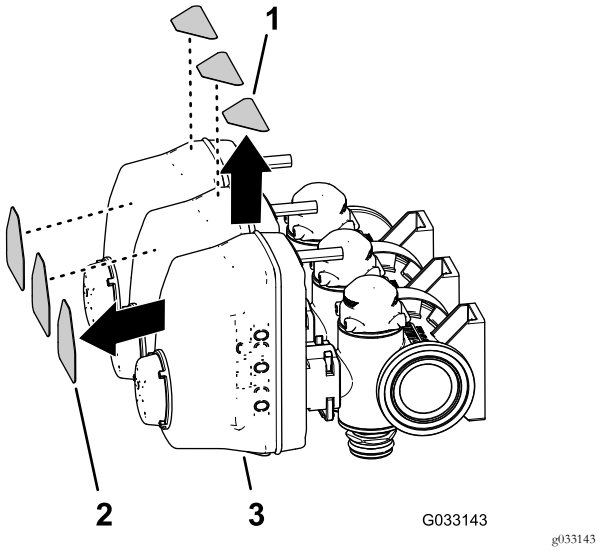

Figure 61

1. Bypass adjustment decal
2. Boom-valve decals
3. Boom-section valve

13

Removing the Boom Sections

Parts needed for this procedure:

1	Cable tie

Removing the Lift Cylinder

Lift equipment capacity: 91 kg (200 lb)

Note: Except where noted, retain all hardware that you remove; you will use the hardware to install the center boom extension.

1. Use lifting equipment of the specified capacity to support the outer boom section.
2. At the back of the machine, remove the hydraulic hoses from between the boom-lift manifold and the hydraulic cylinder (Figure 62).

Note: Protect the boom-lift manifold and the hydraulic cylinder from dust and debris by plugging extend and retract ports.

Note: Discard the hydraulic hoses.

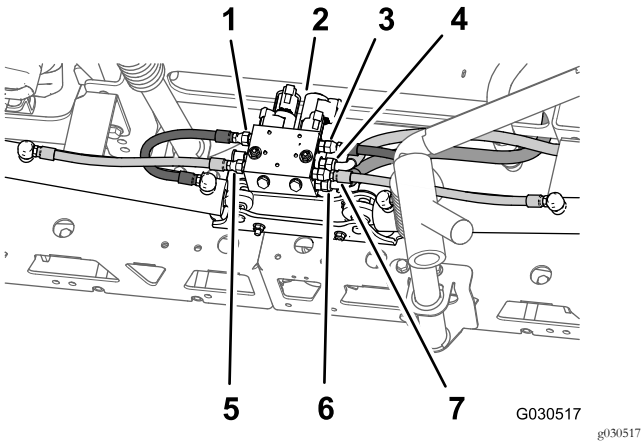

Figure 62

1. Left extend hose (port C3—boom-lift manifold)
2. Boom-lift manifold
3. Right extend hose (port C1—boom-lift manifold)
4. Hydraulic-pressure hose (port P—boom-lift manifold)
5. Left retract hose (port C4—boom-lift manifold)
6. Hydraulic-return hose (port T—boom-lift manifold)
7. Right retract hose (port C2—boom-lift manifold)

3. Remove the hairpin and clevis pin that secure the rod end of the lift cylinder to the pivot bracket (Figure 63).

Note: Retain the clevis pin and hairpin for installation in Assembling the Outer Boom Sections to the Machine (page 43).

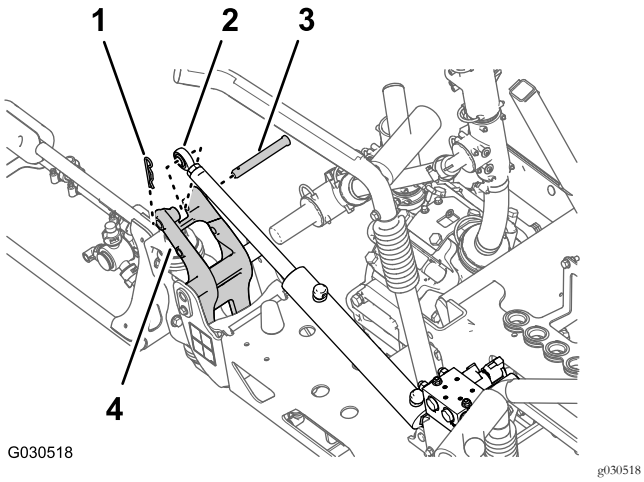

Figure 63

1. Hairpin
2. Rod fitting (lift cylinder)
3. Clevis pin
4. Pivot bracket

4. Remove the flange locknut (5/16 inch) and flange-head bolt (5/16 x 3/4 inch) that secures the pivot pin to the cylinder mount (Figure 64).

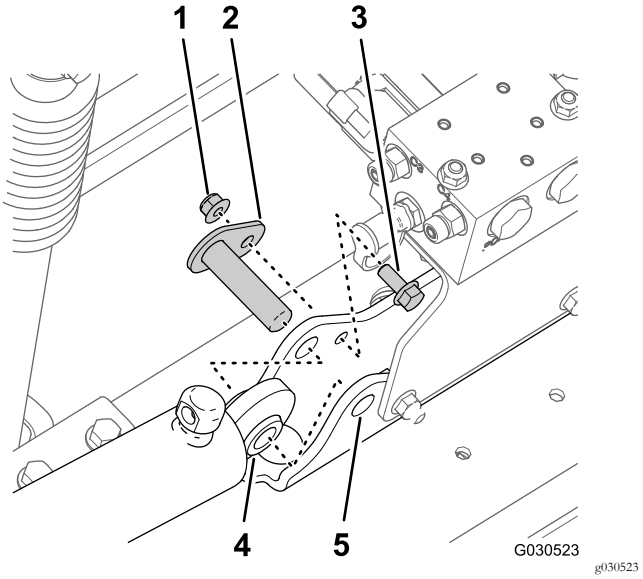

Figure 64

1. Flange locknut (5/16 inch)
2. Pivot pin
3. Flange-head bolt (5/16 x 3/4 inch)
4. Lift cylinder
5. Cylinder mount

5. Remove the pivot pin and the lift cylinder from the machine (Figure 64).
6. Repeat steps 3 and 4 for the lift cylinder at the other side of the machine.

Removing the Outer Boom Sections

Lift equipment capacity: 91 kg (200 lb)

Note: If your machine is equipped with the optional covered boom kit, leave the covers installed at the outer boom sections.

⚠ WARNING

Lifting heavy machines and attachments improperly could result in serious injury or even death.

When lifting heavy machines and attachments, use lifting equipment, such as chains and straps, that is rated for the weight of the equipment.

Note: Except where noted, retain all hardware that you remove; you will use the hardware to install the center boom extension.

1. Remove the flange bolt (5/16 x 1 inch) and flange locknut (5/16 inch) securing the pivot pin to the pivot bracket (Figure 65).

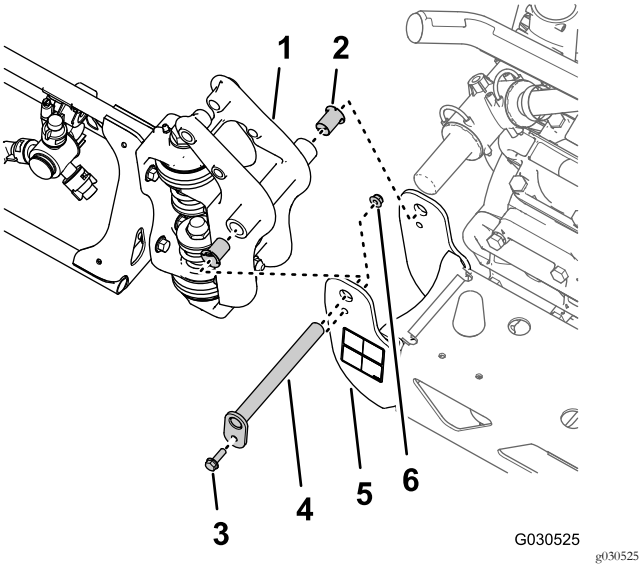

Figure 65

1. Pivot fitting (outer boom section)
2. Nylon-flange bushing
3. Flange bolt (5/16 x 1 inch)
4. Pivot pin
5. Pivot bracket (center boom section)
6. Flange locknut (5/16 inch)

2. Remove the pivot pin from the pivot bracket for the center boom section and the pivot fitting for the outer boom section (Figure 65).

   Note: Retain the flange bolt, flange nut and pivot pin for installation in Assembling the Outer Boom Sections to the Machine (page 43).

3. Separate the outer boom section from the center boom section and remove outer section from the machine (Figure 65).
4. Remove the 2 nylon-flange bushings from the pivot fitting of the outer boom section (Figure 65).

   Note: Discard the bushings.

5. Repeat steps 1 through 4 in Removing the Lift Cylinder (page 27) for the outer boom section at the other side of the machine.
6. Repeat steps 1 through 4 of this section for the outer boom section at the other side of the machine.

Removing Boom-Lift Manifold from the Center Boom Section

1. At port P of the boom-lift manifold, mark the pressure hydraulic hose with a cable tie (Figure 66).

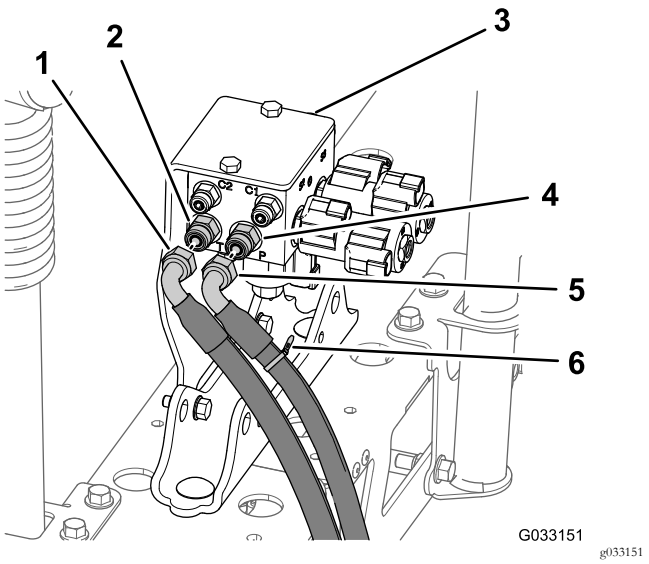

Figure 66

1. Hydraulic-return hose
2. Straight fitting (port T)
3. Boom-lift manifold
4. Straight fitting (port P)
5. Hydraulic-pressure hose
6. Cable tie

2. Disconnect hydraulic pressure and return hoses from the boom-lift manifold (Figure 66).

   Important: Elevate the free ends of the hydraulic-return hose and hydraulic-pressure hose to avoid draining the hydraulic tank.

3. Remove the 2 flange locknuts (5/16 inch) and 2 flange-head bolts (5/16 x 1 inch) that secure the support bracket for the boom-lift manifold to the cylinder mount, and remove the manifold and bracket from the machine (Figure 67).

   Note: Retain the support bracket and lift manifold, bolts, and nuts for installation in steps 1 and 2 of Assembling the Boom-Lift Manifold (page 40).

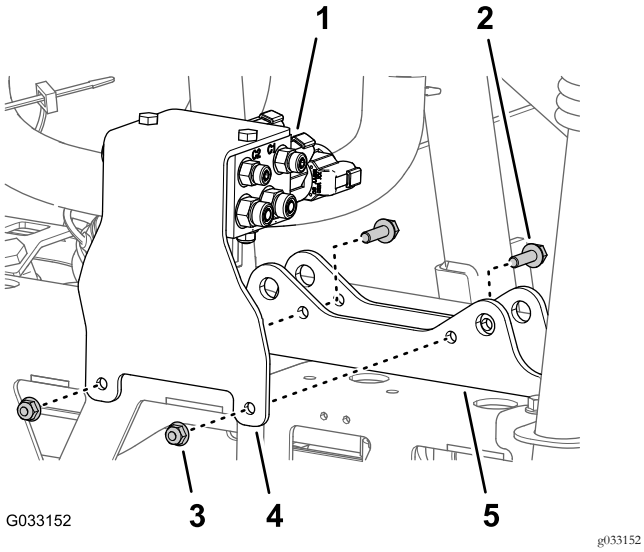

Figure 67

1. Boom-lift manifold
2. Flange-head bolt (5/16 x 1 inch)
3. Flange locknut (5/16 inch)
4. Support bracket (boom-lift manifold)
5. Cylinder mount

Removing the Center Boom Section

Lifting equipment capacity: 41 kg (90 lb)

1. If your machine is equipped with the optional covered-boom kit, remove the cover from the center boom sections.
2. Support the center boom section with lifting equipment with the specified capacity.
3. Use a piece of tape to mark the holes where the 4 flange-head bolts (1/2 x 1-1/4 inches) and 4 flange locknuts (1/2 inch) secure the support brackets for the center boom section to the mounting channels of the machine (Figure 68).

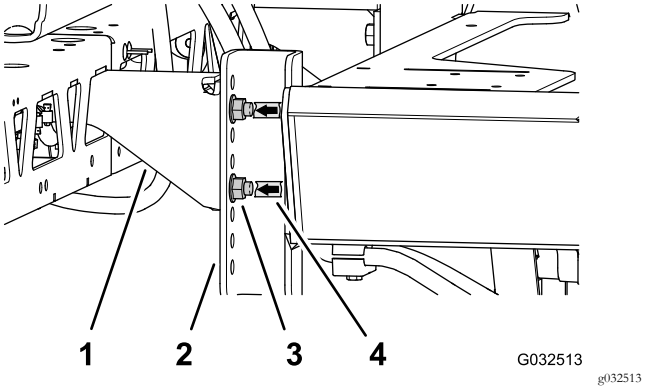

Figure 68

1. Support brackets (center boom section)
2. Mounting channels (machine)
3. Flange-head bolt (1/2 x 1-1/4 inches) and flange locknut (1/2 inch)
4. Tape mark

4. Remove the 4 flange-head bolts (1/2 x 1-1/4 inches) and 4 flange locknuts (1/2 inch) that secure the support brackets of the center boom section to the mounting channel on the frame for the sprayer, and remove the center boom section from the machine (Figure 69).

   Note: Retain the bolts and locknuts for installation of the new center boom section.

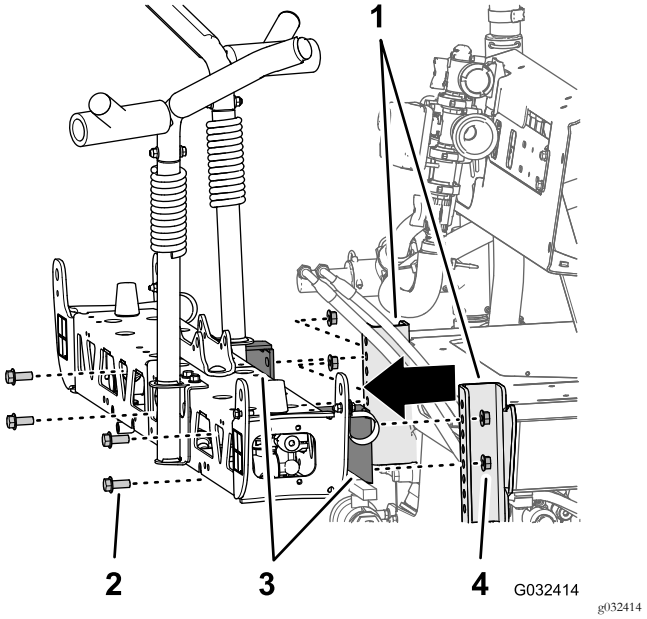

Figure 69

1. Mounting channels (sprayer frame)
2. Flange-head bolt (1/2 x 1-1/4 inches)
3. Support brackets (center boom section)
4. Flange locknut (1/2 inch)

14

Installing the Center Boom Extension

Parts needed for this procedure:

2	Flange-head bolt (3/8 x 1 inch)
2	Flange locknuts (3/8 inch)
1	Center boom extension
1	Cylinder mount (wide)
1	Tie plate (wide)
4	Carriage bolt (1/2 x 1-1/4 inches)
4	Flange locknut (1/2 inch)

Removing the Sprayer Nozzles

1. At the center boom section, remove the flanged locknut that secures the sprayer nozzle to the nozzle mount (Figure 70 and Figure 71).

   Note: Retain the locknut for installation in step 6 of Installing the Sprayer Nozzles and Hoses to the Center Boom Section (page 35).

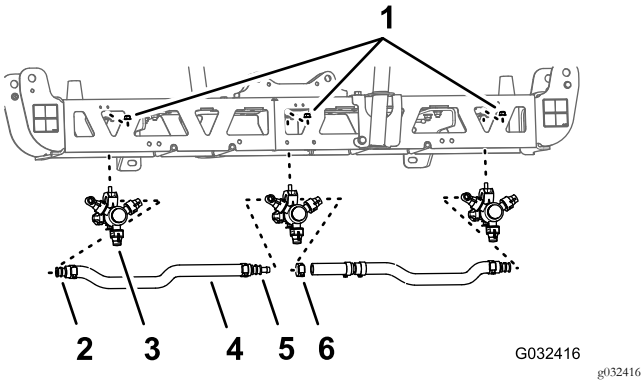

Figure 70

1. Flange locknut (5/16 inch)
2. Single barbed-hose shank (3/4 inch)
3. Sprayer nozzle
4. Hose (3/4 inch inside diameter)
5. Double barbed-hose shank (3/4 inch)
6. Hose clamp

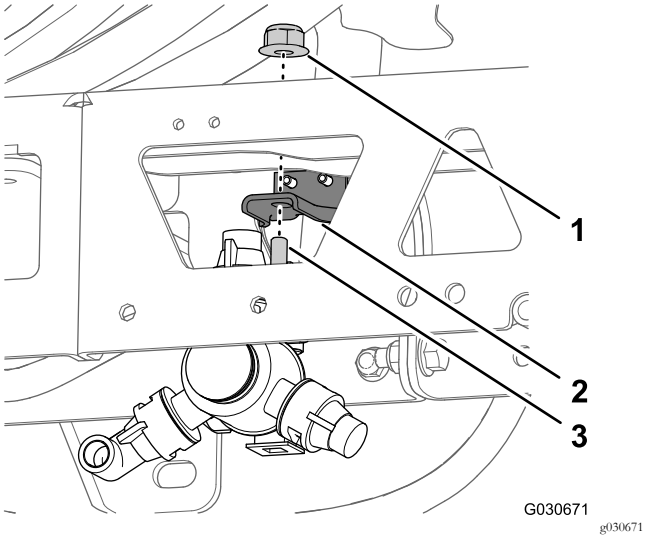

Figure 71

1. Flange locknut (5/16 inch)
2. Nozzle mount
3. Hex-head bolt (5/16 x 3/4 inch—sprayer nozzle)

2. Remove the stainless steel screw (#12 x 1-1/4 inches) that secures the upper clamp half and double or single barbed-hose shank (3/4 inch) to the body of the sprayer nozzle, and separate the barbed-hose shank and hose from the nozzle (Figure 72).

   Note: The hex-head bolt (5/16 x 3/4 inch—stainless steel) will separate from the upper clamp half when you open the clamp, retain the bolt for installation.

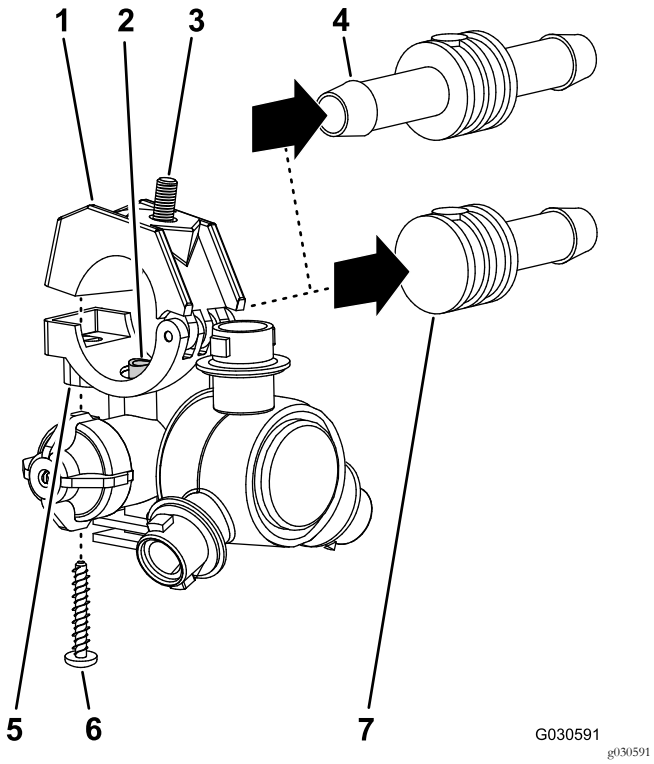

Figure 72

1. Upper clamp half
2. Transfer tube
3. Hex-head bolt (5/16 x 3/4 inch—stainless steel)
4. Double barbed-hose shank (3/4 inch)
5. Saddle (sprayer-nozzle body)
6. Stainless steel screw (#12 x 1-1/4 inches)
7. Single barbed-hose shank (3/4 inch)

3. Remove the nozzle from the center boom section (Figure 70 and Figure 71).
4. Repeat steps 1 and 2 for the other 2 sprayer nozzles.

   Note: Retain the sprayer nozzles, stainless steel screws, and hex-head bolts for installation in step 6 and 7 of Assembling the Sprayer Nozzles and Hoses for the Center Boom Section (page 34).
5. Remove the hoses (3/4 inch inside diameter), barbed-hose shanks, clamps and barbed T-fitting from the center boom section (Figure 70).

   Note: You no longer need the hose, hose shanks, clamps, and T-fitting.

Removing the Support Brackets from the Center Boom Section

Lifting equipment capacity: 41 kg (90 lb)

1. Support the center boom section with lifting equipment with the specified capacity.
2. Remove the 2 flange-head bolt (3/8 x 1 inch) and 2 flange locknut (3/8 inch) that secure the support bracket to the center boom section, and remove the bracket (Figure 73).

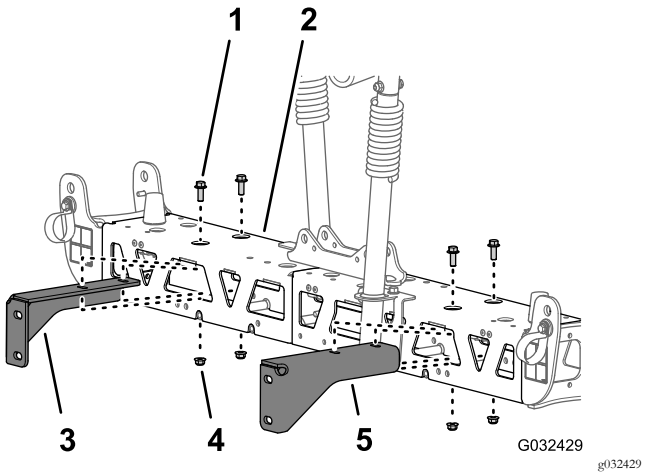

Figure 73

1. Flange-head bolt (3/8 x 1 inch)
2. Center boom section
3. Right support bracket (center boom section)
4. Flange locknut (3/8 inch)
5. Left support bracket (center boom section)

3. Remove the 2 flange-head bolt (3/8 x 1 inch) and 2 flange locknut (3/8 inch) that secure the other support bracket to the center boom section, and remove the bracket (Figure 73).

   Note: Retain the support brackets, bolts, and locknuts for installation in steps 3 and 4 of Assembling the Support Brackets to the Center Boom Section (page 34).

Separating the Center Boom Section Trusses

1. Remove the 2 flange-head bolts (3/8 x 1 inch) and 2 locknuts (3/8 inch) that secure the vertical flanges of the left and right truss frames (Figure 74).

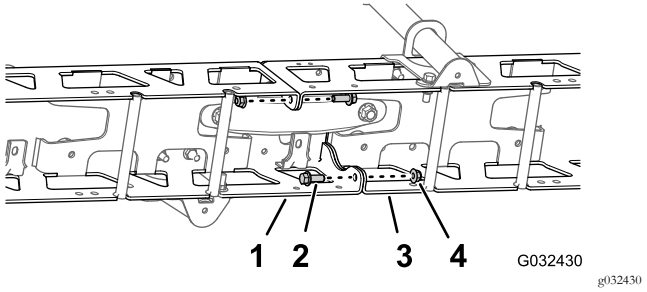

Figure 74

1. Left truss frame
2. Flange-head bolt (3/8 x 1 inch)
3. Right truss frame
4. Locknuts (3/8 inch)

2. Remove the 2 carriage bolts (1/2 x 1-1/4 inches) and 2 locknuts (1/2 inch) that secure the narrow cylinder mount, left and right truss frames, and narrow tie plate (Figure 75).

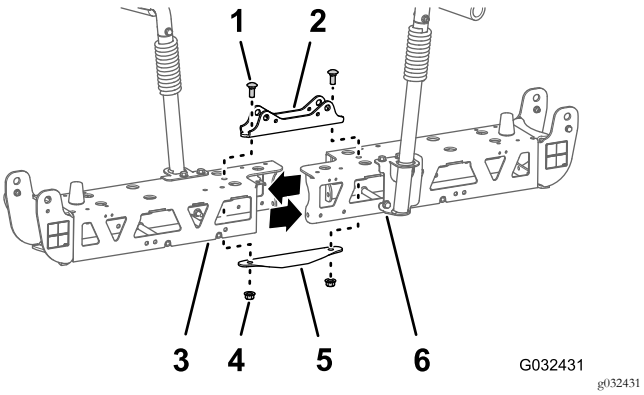

Figure 75

1. Carriage bolt (1/2 x 1-1/4 inches)
2. Cylinder mount (narrow)
3. Left truss frame
4. Locknuts (1/2 inch)
5. Tie plate (narrow)
6. Right truss frame

Note: Retain the flange-head bolts, carriage bolts, and locknuts for installation in steps 2 and 7 of Installing the Center Boom Extension (page 33). You no longer need the narrow cylinder mount and narrow tie plate.

3. Separate the left and right truss frames.

Installing the Center Boom Extension

1. Align the holes in vertical flanges of the center boom extension with the holes in the truss frame (Figure 76).

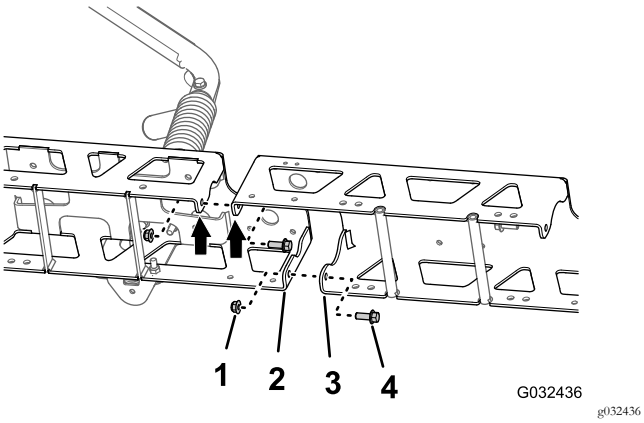

Figure 76

1. Flange locknuts (3/8 inch)
2. Vertical flange (truss frame)
3. Vertical flange (center boom extension)
4. Flange-head bolts (3/8 x 1 inch)

2. Loosely assemble the center boom extension to the truss frame (Figure 76) with the 2 flange-head bolts (3/8 x 1 inch) and 2 flange locknuts (3/8 inch) that you removed in step 1 of Separating the Center Boom Section Trusses (page 32).
3. Align the holes in vertical flanges of the center boom extension with the holes in the other truss frame (Figure 76).
4. Loosely assemble the center boom extension to the other truss frame (Figure 76) with the 2 flange-head bolts (3/8 x 1 inch) and 2 flange locknuts (3/8 inch) from the GeoLink spray system finishing kit (Figure 76).
5. Align the holes in the cylinder mount with the holes at the center line of the truss frame and center boom extension (Figure 77).

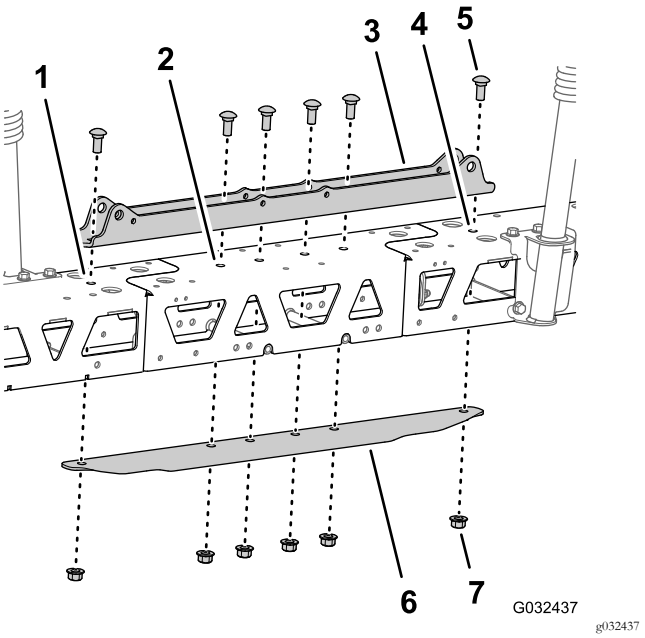

Figure 77

1. Left truss frame
2. Center boom extension
3. Cylinder mount (wide)
4. Right truss frame
5. Carriage bolt (1/2 x 1-1/4 inches)
6. Tie plate (wide)
7. Flange locknut (1/2 inch)

6. Insert the tie plate into the truss frame and center boom extension and align the hole in the tie plate with the holes at the center line of the trusses and boom extension (Figure 77).
7. Assemble the cylinder mount, trusses, center boom extension, and tie plate with the 2 carriage bolt (1/2 x 1-1/4 inches) and 2 flange locknut (1/2 inch) that you removed in step 2 of Separating the Center Boom Section Trusses (page 32), and the 4 carriage bolt (1/2 x 1-1/4 inches) and 4 flange locknut (1/2 inch) from the GeoLink spray system finishing kit (Figure 77).
8. Torque the flange locknuts (3/8 inch) to 37 to 45 N·m (27 to 33 ft-lb).
9. Torque the flange locknuts (1/2 inch) to 91 to 113 N·m (67 to 83 ft-lb).

15

Installing the Mount Brackets and Sprayer Nozzles to the Center Boom Section

Parts needed for this procedure:

2	Sprayer nozzle
2	Hose assembly (sprayer valve 5 or 6)
2	Flange locknut (5/16 inch)

Assembling the Support Brackets to the Center Boom Section

Lifting equipment capacity: 55 kg (120 lb)

1. Support the center boom section with lifting equipment with the specified capacity.
2. Align the holes in the right support bracket to the holes in the right truss frame as shown in Figure 78.

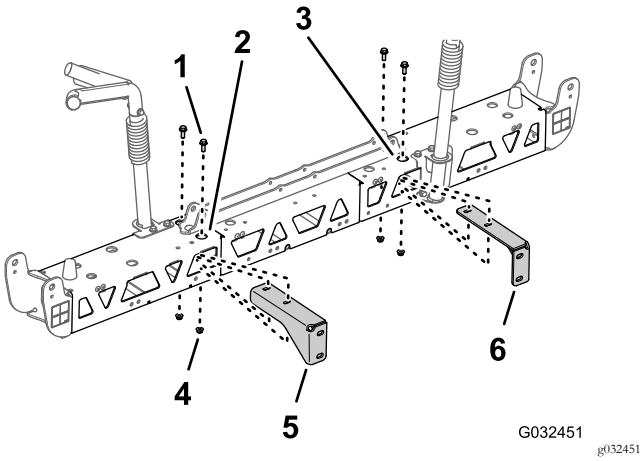

Figure 78

1. Flange-head bolt (3/8 x 1 inch)
2. Right truss frame (center boom section)
3. Left truss frame (center boom section)
4. Flange locknut (3/8 inch)
5. Right support bracket (center boom section)
6. Left support bracket (center boom section)

3. Assemble the right support bracket to the right truss frame (Figure 78) with the 2 flange-head bolts (3/8 x 1 inch) and 2 flange locknut (3/8 inch) that you removed in steps 2 and 3 of Removing the Support Brackets from the Center Boom Section (page 32).
4. Repeat steps 2 and 3 for the left support bracket at the left truss frame (Figure 78).
5. Torque the flange-head bolts and flange nuts to 37 to 45 N·m (27 to 33 ft-lb).

Assembling the Sprayer Nozzles and Hoses for the Center Boom Section

1. Using lifting equipment, raise the new center boom section to a comfortable working height.
2. Working with the 2 sprayer nozzle from the GeoLink spray system finishing kit, remove the stainless steel screw that secures the upper clamp half to the saddle (Figure 79).

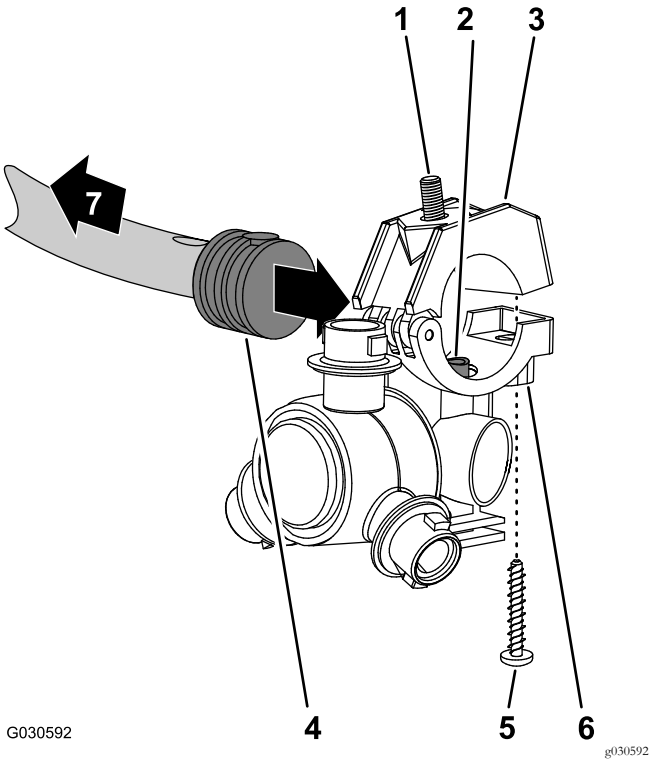

Figure 79

1. Hex-head bolt (5/16 x 3/4 inch—stainless steel)
2. Transfer tube
3. Upper clamp half
4. Single barbed-hose shank (1/2 inch)
5. Stainless steel screw (#12 x 1-1/4 inches)
6. Sprayer-nozzle body
7. Toward the boom section

3. Locate the hole in the side of single barbed-hose shank at the end of the hose 25 cm (10 inches) of the hose assembly (sprayer valve 5 or 6) for the center boom section (Figure 79 and Figure 80).

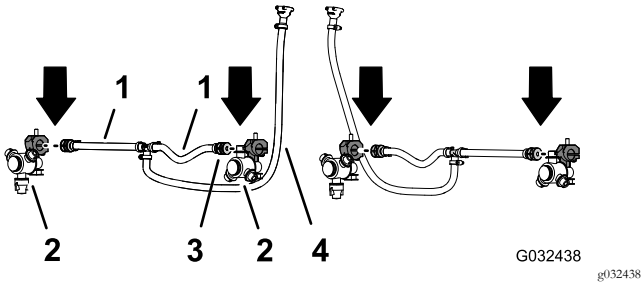

Figure 80

1. Hose 13 x 250 mm (1/2 x 10 inches—sprayer valve 5 or 6)
2. Sprayer nozzle
3. Single barbed-hose shank 13 mm (1/2 inch)
4. Hose and barbed coupler 13 x 810 mm (1/2 x 32 inches—sprayer valve 5 or 6)

4. Align the transfer tube in the saddle of a sprayer nozzle (Figure 79) with the hole in the side of the single barbed-hose shank (1/2 inch).
5. Close the upper clamp half around the barbed-hose shank and secure the clamp half and spray-nozzle body (Figure 79) with the stainless steel screw (#12 x 1-1/4 inches); torque the stainless steel screw to 14 to 18 N·m (20 to 25 in-lb).

   Important: Do not tighten the stainless steel screw more than the torque specification in step 5.

   Note: Ensure that the hex-head bolt (5/16 x 3/4 inch) is seated in the recess in the upper clamp half when closing the clamp.
6. Working with the sprayer nozzle, hex-head bolt, and stainless steel screw that you removed in steps 1 and 2 of Removing the Sprayer Nozzles (page 31), repeat steps 3 through 5 to the single barbed-hose shank (Figure 79 and Figure 80) at the end of the other hose 25 cm (10 inches).
7. Working with the 2 sprayer nozzles that you removed in step 4 of Removing the Sprayer Nozzles (page 31), repeat steps 3 through 5 to the single barbed-hose shanks of the other hose assembly (sprayer valve 5 or 6) for the center boom section (Figure 79 and Figure 80).

Installing the Sprayer Nozzles and Hoses to the Center Boom Section

1. Route the hose 13 mm (10 inches) and nozzle assembly between the truss braces of the outer truss (Figure 81).

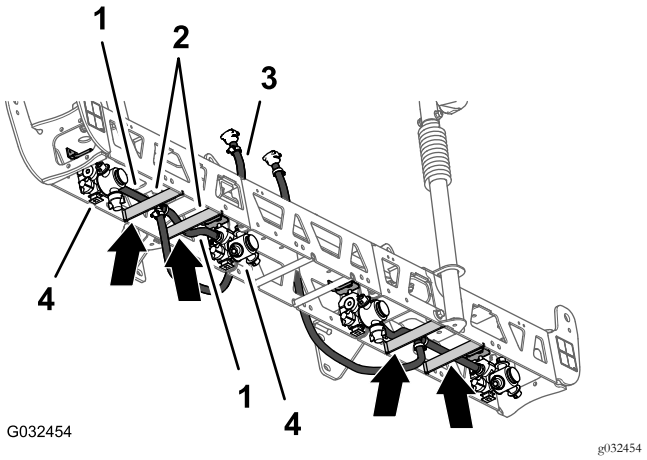

Figure 81

1. Hoses 13 x 250 mm (1/2 x 10 inches)
2. Truss braces (left truss)
3. Hose and barbed coupler 13 x 810 mm (1/2 x 32 inches)
4. Sprayer nozzles

2. Route the hose and nozzle above the truss brace and outward to the outboard nozzle mount (Figure 81).
3. Align the hex-head bolt (5/16 x 3/4 inch) of the sprayer nozzle through the hole in the nozzle mount and loosely secure the nozzle to the mount with a flange locknut (5/16 inch) from the GeoLink spray system finishing kit (Figure 82).

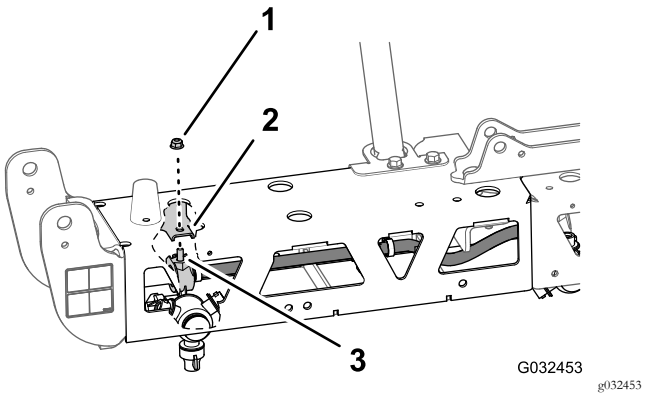

Figure 82

1. Flange locknut (5/16 inch)
2. Nozzle mount (outboard)
3. Hex-head bolt (5/16 x 3/4 inch—stainless steel)

4. Route the other hose 13 mm (10 inches)and nozzle assembly between the s truss braces of the outer truss (Figure 81).
5. Route the hose and nozzle above the truss brace and inward to the inboard nozzle mount (Figure 81).

6. Align the hex-head bolt (5/16 x 3/4 inch) of the sprayer nozzle through the hole in the nozzle mount (Figure 82) and loosely secure the nozzle to the mount with a flange locknut (5/16 inch) that you removed in steps 1 and 4 of Removing the Sprayer Nozzles (page 31).
7. Torque the flange locknut to 1978 to 2542 N·cm (175 to 225 in-lb).
8. Route the hose and barbed coupler 13 x 810 mm (1/2 x 32 inches) to the side of the center boom section with the left and right support brackets (Figure 81).
9. Repeat steps 1 through 8 for the other hose and nozzle assembly at the other outer truss (Figure 81 and Figure 82).

16

Installing the Flow Meter and Pressure Transducer

Parts needed for this procedure:

1	Flow meter
2	Flange clamp 76 mm (3 inches)
2	Gasket (2-1/4 inch outside diameter)
2	Reducer adapter
1	Flange clamp 51 mm (2 inches)
1	Gasket (1-5/16 inch outside diameter)
1	Barbed-flange fitting (1 inch)
1	Hose (1 x 7-1/4 inches)
3	Hose clamp
1	Pressure transducer and manifold
1	Hose (1 x 8-1/2 inches)
1	R-clamp
1	Flange-head bolt (1/4 x 3/4 inch)
1	Flange locknut (1/4 inch)

Assembling the Flow Meter and Pressure Transducer

1. Align the gasket (2-1/4 inches) and reducer adapter that you removed in step 4 of Removing the Connector Tube and Reducer Adapter (page 22) to the end of the flow meter to which the directional points (Figure 83).

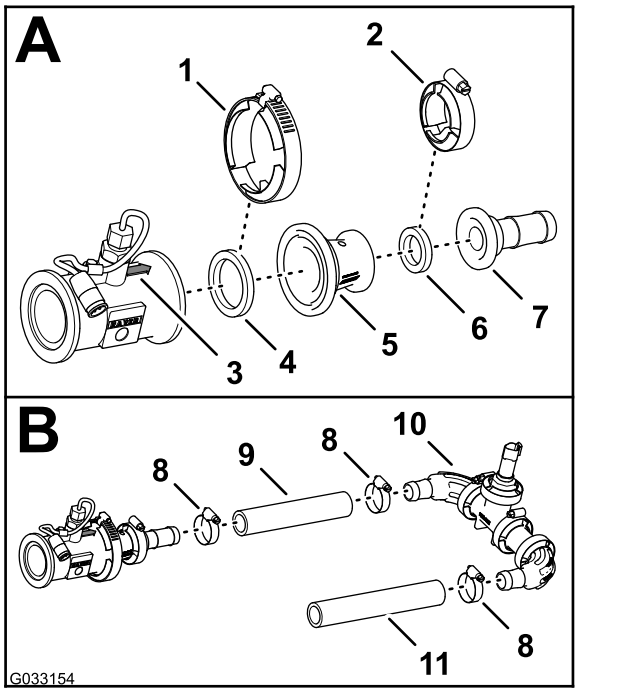

g033154

Figure 83

1. Flange clamp 76 mm (3 inches)
2. Flange clamp 51 mm (2 inches)
3. Directional arrow (flow meter)
4. Gasket (2-1/4 inch outside diameter)
5. Reducer adapter
6. Gasket (1-5/16 inch outside diameter)
7. Barbed-flange fitting (1 inch)
8. Hose clamp
9. Hose (1 x 7-1/4 inches)
10. Pressure transducer and manifold
11. Hose (1 x 8-1/2 inches)

2. Secure the flow meter and gasket (2-1/4 inch outside diameter) to the adapter (Figure 83) with a flange clamp 76 mm (3 inches) that you removed in steps 2 and 3 of Removing the Connector Tube and Reducer Adapter (page 22).
3. Align the gasket (2-1/4 inches) and barbed hose fitting to the end of the reducer adapter (Figure 83).
4. Secure the barbed-flange fitting, gasket, and reducer adapter (Figure 83) with a flange clamp 51 mm (2 inches).
5. Assemble the hose (1 x 7-1/4 inches) onto the barbed-flange fitting and the barbed elbow fitting of the pressure transducer and manifold as shown in Figure 83.
6. Secure the hose and barbed fittings with 2 hose clamps (Figure 83).
7. Assemble the hose (1 x 8-1/2 inches) onto the other barbed elbow-fitting of the pressure transducer and manifold as shown in Figure 83.
8. Secure the hose and barbed fitting with a hose clamp (Figure 83).

Installing the Flow Meter and Pressure Transducer onto the Machine

1. Align the gasket (2-1/4 inches) that you removed in step 3 of Removing the Connector Tube and Reducer Adapter (page 22)between the flow meter and the reducer adapter that is installed at the right side of the master-control valve (Figure 84).

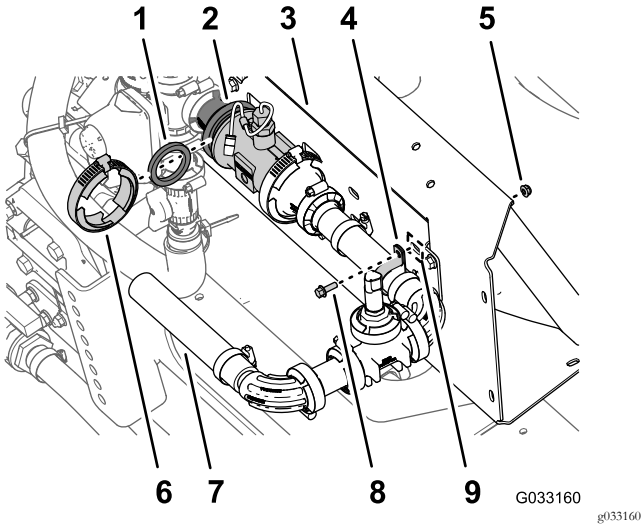

Figure 84

1. Gasket (2-1/4 inch outside diameter)
2. Reducer-adapter and flow-meter flanges
3. Manifold mount
4. R-clamp
5. Flange locknut (1/4 inch)
6. Flange clamp 76 mm (3 inches)
7. Hose (1 x 8-1/2 inches)
8. Flange-head bolt (1/4 x 3/4 inch)
9. Slot (Manifold mount)

2. Loosely assemble the gasket, flow meter, and reducer adapter (Figure 84) with a flange clamp 76 mm (3 inches) that you removed in step 2 of Removing the Connector Tube and Reducer Adapter (page 22).
3. Secure the pressure transducer and manifold to the slot in the manifold mount with a R-clamp, flange-head bolt (1/4 x 3/4 inch), and flange locknut (1/4 inch) as shown in Figure 84.
4. Tighten the flange clamp that you assembled in steps 2.

17

Installing the New Center Boom Section

No Parts Required

Procedure

Lifting equipment capacity: 55 kg (120 lb)

1. Using lifting equipment with the specified lift capacity, raise the center boom section and align the holes in the support bracket for the boom section with the third and sixth holes in the mounting channel for the sprayer frame (Figure 85).

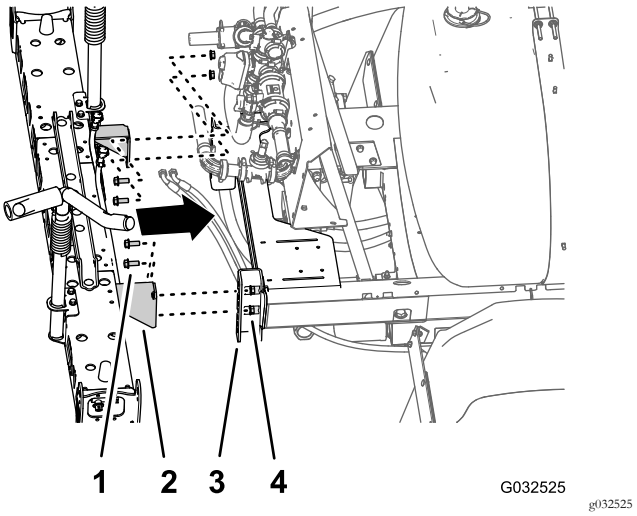

Figure 85

1. Flange-head bolt (1/2 x 1-1/4 inches)
2. Support bracket (center boom section—10-sprayer-valve system)
3. Mounting channel (sprayer frame)
4. Flange locknut (1/2 inch)

2. Assemble the center boom section to the mounting channels (Figure 85) with the 4 flange-head bolt (1/2 x 1-1/4 inches) and 4 flange locknut (1/2 inch) that you removed in step 4 in Removing the Center Boom Section (page 30).
3. Torque the nuts and bolts to 91 to 113 N·m (67 to 83 ft-lb).

18

Installing the Valve Mount and Sprayer Valves

Parts needed for this procedure:

1	Valve mount and sprayer-valve assembly
4	Bolt (4 x 10 mm)
1	Sprayer controller
4	Flange locknut (4 mm)
8	Flange-head bolts (5/16 x 3/4 inch)
8	Flange locknuts (5/16 inch)
1	Hose clamp

Assembling the Sprayer Controller to the Valve Mount

1. Align the sprayer controller the forward side of the valve mount with the 40-pin connector outward (Figure 86).

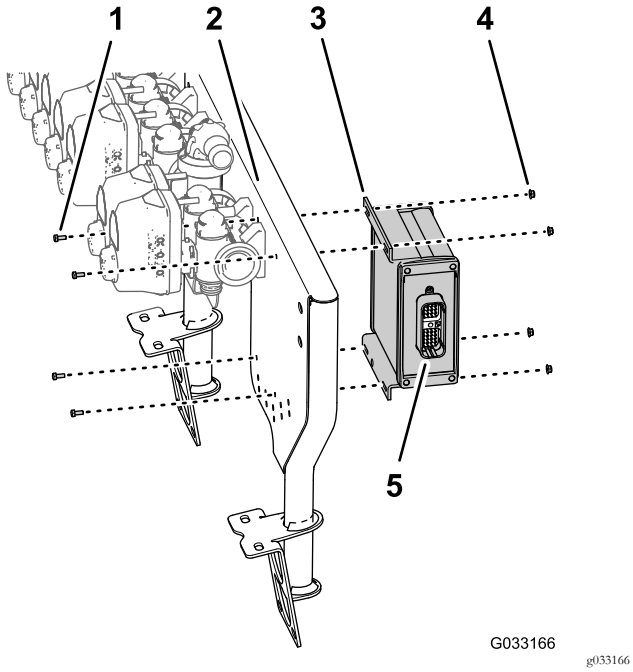

Figure 86

1. Bolt (4 x 10 mm)
2. 10-valve mount
3. Sprayer controller
4. Flange locknut (4 mm)
5. 40-pin connector

2. Assemble the sprayer controller to the valve mount (Figure 86) with the 4 bolts (4 x 10 mm) and 4 flange locknuts (4 mm).
3. Torque the bolts and nuts to 234 to 286 N·cm (21 to 25 to in-lb).

Assembling the Valve Mount and Sprayer Valve Assembly to the Machine

Lifting equipment capacity: 23 kg (50 lb)

1. Using lifting equipment with the specified capacity, lift the valve mount and sprayer valve assembly and align it over the center boom section (Figure 87).

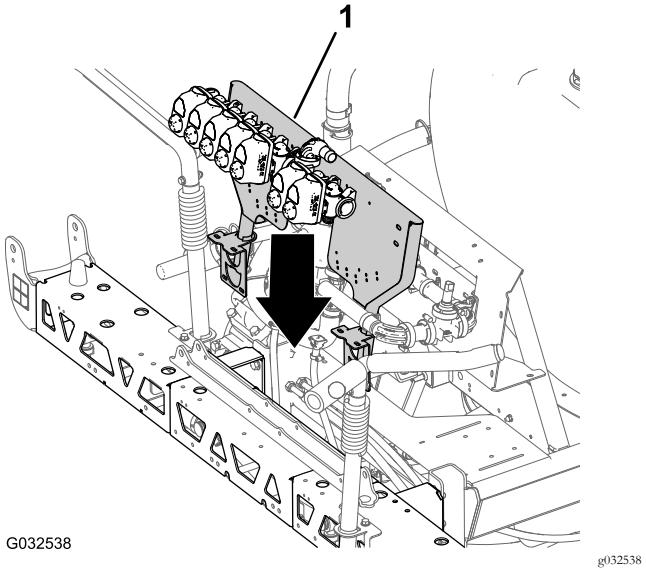

Figure 87

1. Valve mount and sprayer-valve assembly

2. Align the holes on the mount bracket of the valve mount to the holes on the truss frame of the center boom section (Figure 88).

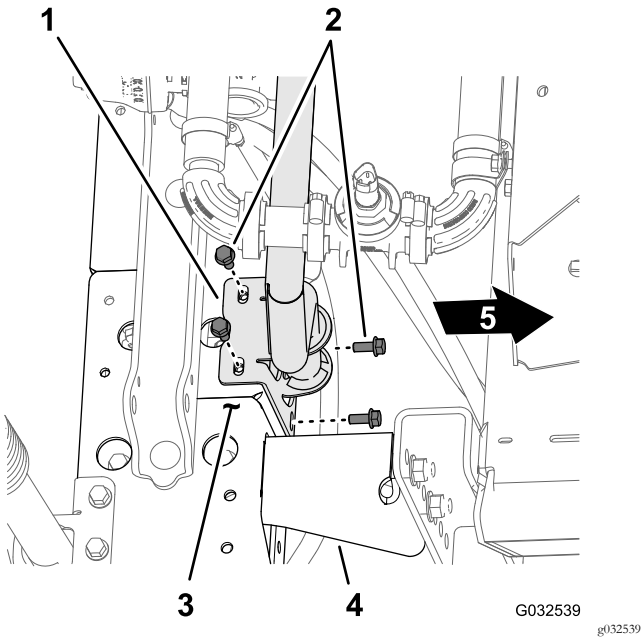

Figure 88

1. Mount bracket (valve mount)
2. Flange-head bolt (5/16 x 3/4 inch)
3. Truss frame (center boom section)
4. Support bracket
5. Front of the machine

3. Assemble the valve mount to the truss frame (Figure 88 and Figure 89) with 4 bolts (5/16 x 3/4 inch) and 4 flange locknuts (5/16 inch).

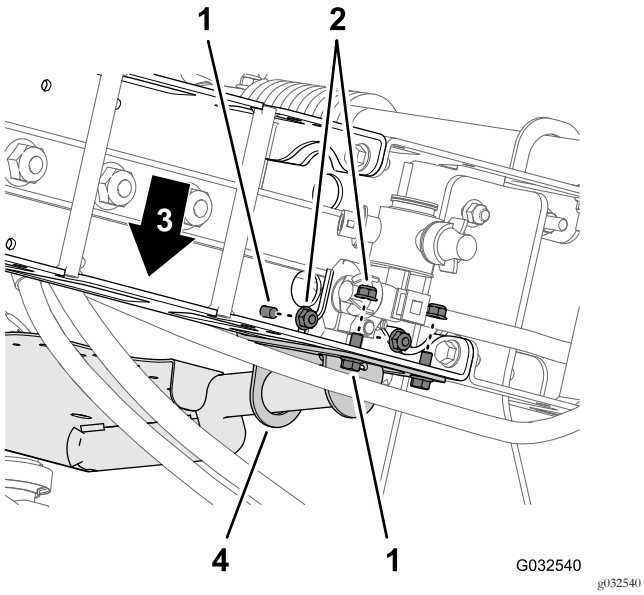

Figure 89

1. Flange-head bolt (5/16 x 3/4 inch)
2. Flange locknuts (5/16 inch)
3. Front of the machine
4. Mount bracket (valve mount)

4. Repeat steps 2 through 3 for the other mount bracket of the valve mount at the other truss frame.

5. Torque the flange-head bolts and flange locknuts to 1978 to 2542 N·cm (175 to 225 in-lb).

Assembling the Hose to the Sprayer Valve Manifold

1. Assemble the hose (1 x 8-1/2 inches) over the 90° flange fitting (1 inch) as shown in Figure 90.

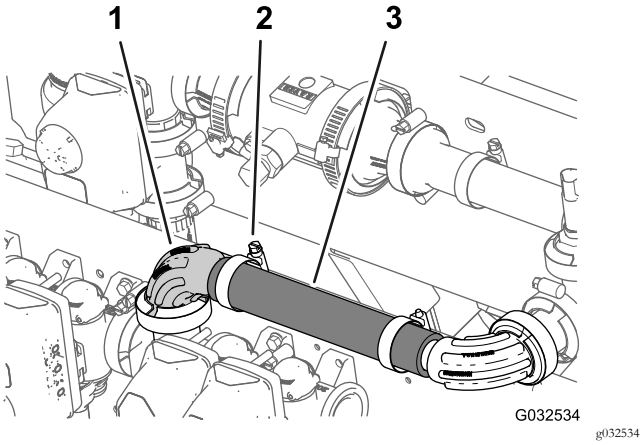

Figure 90

1. 90° flange fitting (1 inch)
2. Hose clamp
3. Hose (1 x 8-1/2 inches)

2. Secure the hose to the flange fitting with a hose clamp (Figure 90).

Assembling Sprayer Valves 8, 9, and 10 to the Valve Mount

Important: The left boom-section valve that you removed in step 3 of Disassembling the Boom-Section Valves from the Manifold Mount (page 27) is identified as nozzle-valve 8, the center boom-section valve is identified as nozzle-valve 9, and the right boom-section valve is identified as nozzle-valve 10 for the remainder of the GeoLink finishing kit installation instructions.

1. Align the gasket and the flange of the left section valve (identified as nozzle-valve 8) with the flange of nozzle-valve 7 (Figure 91).

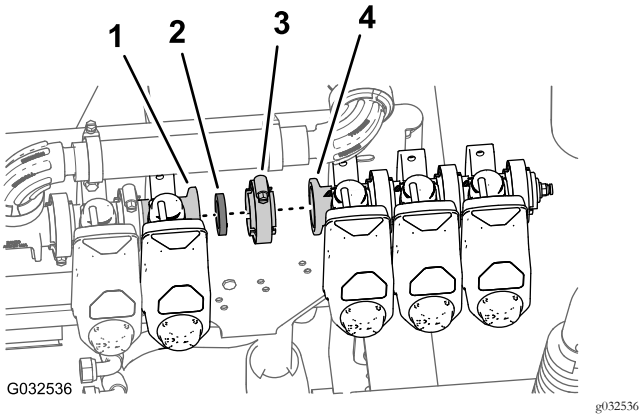

Figure 91

1. Flange (nozzle-valve 7)
2. Gasket
3. Flange clamp
4. Flange (nozzle-valve 8)

2. Loosely secure the gasket and nozzle-valve 8 to nozzle valve 7 with a flange clamp (Figure 91).
3. Assemble nozzle-valve 10 to the valve mount (Figure 92) with the 2 flange-head bolts (1/4 x 3/4 inch) and 2 flange locknuts (1/4 inch) that you removed in step 2 of Disassembling the Boom-Section Valves from the Manifold Mount (page 27).

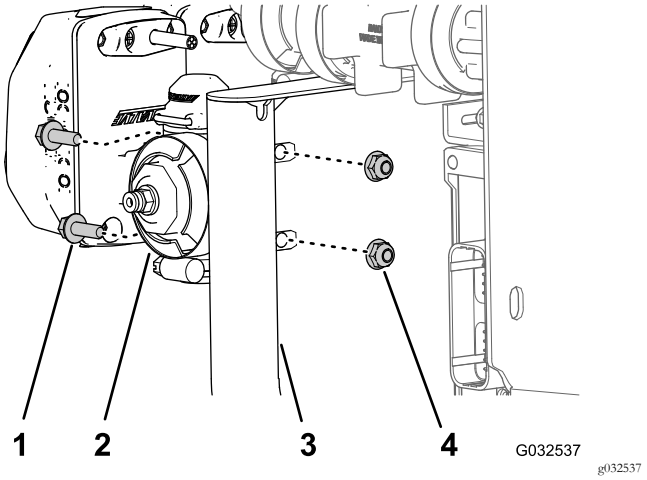

Figure 92

1. Flange-head bolt (1/4 x 3/4 inch)
2. Nozzle-valve 10
3. Valve mount
4. Flange locknut (1/4 inch)

4. Torque the flange-head bolt and locknut to 1017 to 1243 N·cm (90 to 120 in-lb).
5. Tighten the flange clamp by hand.

19

Assembling the Boom-Lift Cylinders

Parts needed for this procedure:

4	Hydraulic hose (1/4 x 24-3/4 inches)

Assembling the Boom-Lift Manifold

1. Align the holes in the support bracket for the boom-lift manifold that you removed in step 3 of Removing Boom-Lift Manifold from the Center Boom Section (page 29) with the wide cylinder mount of the new center boom section (Figure 93).

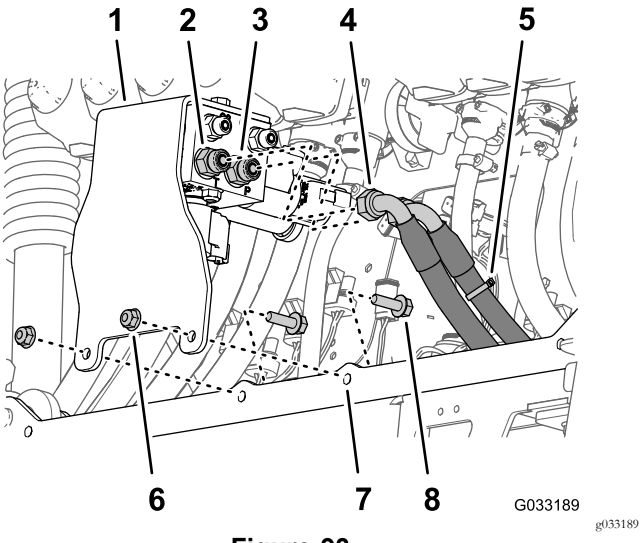

Figure 93

1. Support bracket and boom-lift manifold
2. Straight fitting (port T)
3. Straight fitting (port P)
4. Hydraulic-return hose
5. Hydraulic-pressure hose (marked with a cable tie)
6. Flange locknut (5/16 inch)
7. Cylinder mount (wide)
8. Flange-head bolt (5/16 x 1 inch)

2. Assemble the support bracket to the cylinder mount (Figure 93) with the 2 flange-head bolts (5/16 x 1 inch) and flange locknuts (5/16 inch) that you removed in step 3 of Removing Boom-Lift Manifold from the Center Boom Section (page 29).
3. Torque the nuts and bolts to 1978 to 2542 N·cm (175 to 225 in-lb).
4. Assemble the hydraulic-pressure hose (marked with a cable tie) onto port P of the boom-lift manifold (Figure 93).
5. Assemble the hydraulic-return hose onto port T of the boom-lift manifold (Figure 93).
6. Torque the swivel nuts of the hoses to 37 to 45 N·m (27 to 33 ft-lb).

Assembling the Lift Cylinders

1. Align the fixed end of the lift cylinder that you removed in step 4 of Removing the Lift Cylinder (page 27) to the 16 mm (5/8 inch) hole in the cylinder mount (Figure 94).

   Note: Ensure that the extend and retract ports of the cylinder align up.

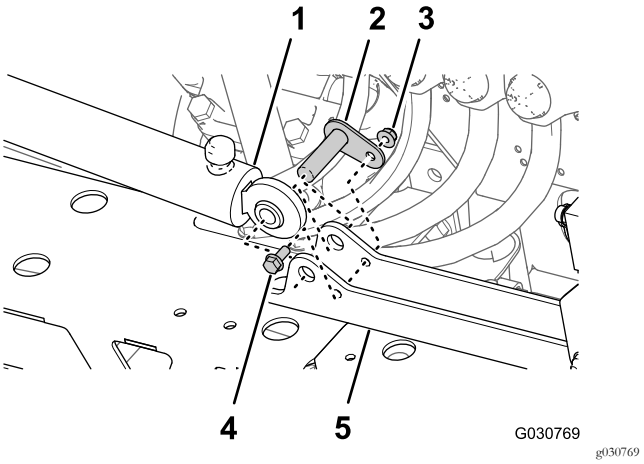

Figure 94

1. Lift cylinder (fixed end))
2. Pivot pin
3. Flange locknut (5/16 inch)
4. Flange-head bolt (5/16 x 3/4 inch)
5. Cylinder mount

2. Assemble the cylinder to the cylinder mount with the pivot pin, flanged-head bolt, and flange nut (Figure 94).
3. Torque the bolt and nut to 1978 to 2542 N·cm (175 to 225 in-lb).
4. Repeat steps 1 through 3 for the other lift cylinder at the other side of the cylinder mount.

Installing the Lift-Cylinder Hoses

1. Loosely assemble a new hydraulic hose (1/4 x 24-3/4 inches) between the extend port of the left boom-lift cylinder and port C3 of the boom-lift manifold (Figure 95).

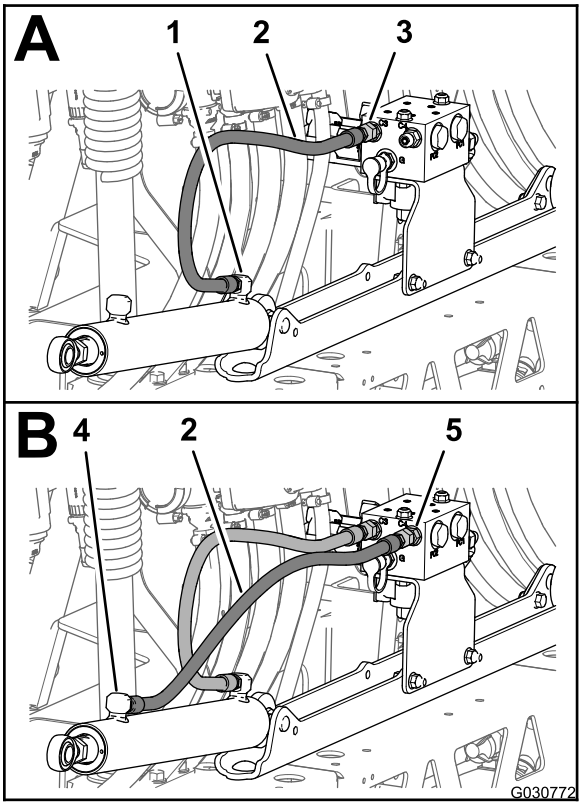

g030772

Figure 95

1. Extend port (left boom-lift cylinder)
2. Hydraulic hose (1/4 x 24-3/4 inches)
3. Port C3 (boom-lift manifold)
4. Retract port (left boom-lift cylinder)
5. Port C4 (boom-lift manifold)

2. Loosely assemble a new hydraulic hose (1/4 x 24-3/4 inches) between the retract port of the left boom-lift cylinder and port C4 of the boom-lift manifold (Figure 95).
3. Loosely assemble a new hydraulic hose (1/4 x 24-3/4 inches) between the extend port of the right boom-lift cylinder and port C1 of the boom-lift manifold (Figure 96).

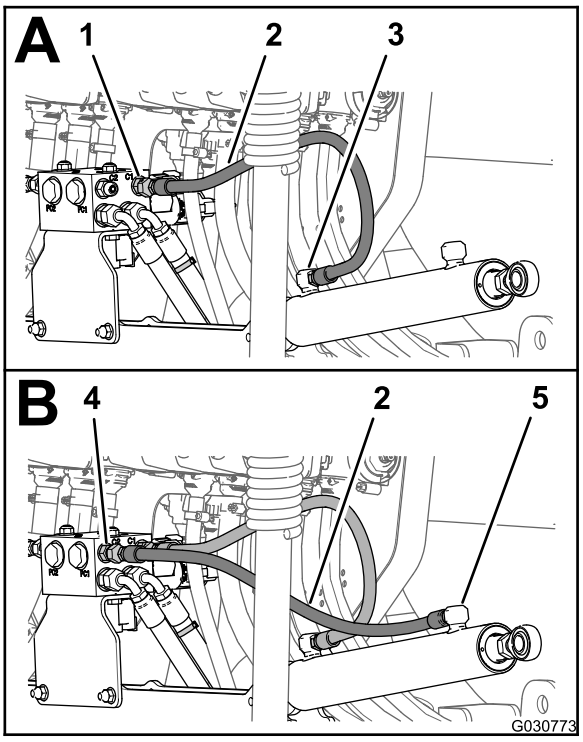

g030773

Figure 96

1. Port C1 (boom-lift manifold)
2. Hydraulic hose (1/4 x 24-3/4 inches)
3. Extend port (right boom-lift cylinder)
4. Port C2 (boom-lift manifold)
5. Retract port (right boom-lift cylinder)

4. Loosely assemble a new hydraulic hose (1/4 x 24-3/4 inches) between the retract port of the right boom-lift cylinder and port C2 of the boom-lift manifold (Figure 96).
5. Torque the hose fittings at the extend and retract ports of the lift cylinders (Figure 95 and Figure 96) to 21 to 26 N·m (15 to 19 ft-lb).
6. Torque the swivel nuts of the hoses at the boom-lift manifold (Figure 95 and Figure 96) to 24 to 30 N·m (17 to 22 ft-lb).

20

Installing the Outer Boom Sections

Parts needed for this procedure:

4	Nylon-flange bushing
1	Cable tie
1	Supply hose assembly—188 cm (74 inches)
1	Supply hose assembly—234 cm (92 inches)
1	Supply hose assembly—279 cm (110 inches)

Removing the Sprayer Nozzles from the Outer Boom Sections

1. Cut the hose between 2 sprayer nozzles (Figure 97).

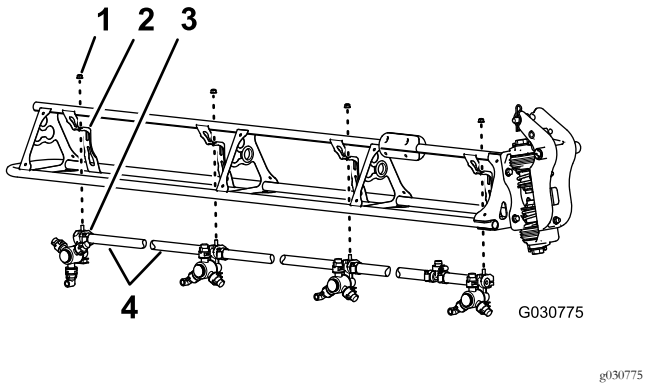

Figure 97

1. Flange locknut (5/16 inch)
2. Nozzle support
3. Sprayer nozzle
4. Hose (3/4 inch inside diameter)

2. Remove the flange locknut (5/16 inch) that secures the sprayer nozzle to the nozzle support (Figure 97).
3. Repeat steps 2 and 1 for the other 3 nozzles.

   Note: Retain the flange locknut and sprayer nozzle for installation in Installing the Sprayer Nozzles at the Outer Boom Sections (page 49).

   Note: Discard the hoses, clamps and T-fitting that you removed from the machine.
4. Repeat steps 2 through 3 at the other outer boom section.
5. Working with the 8 sprayer nozzles that you removed in step 1, remove the stainless steel screws (#12 x 1-1/4 inches) that secures the upper clamp halves and the double or single barbed-hose shanks (3/4 inch) to the body of each of the sprayer nozzle, and remove the barbed-hose shanks (Figure 98).

   Note: The hex-head bolt (5/16 x 3/4 inch—stainless steel) will separate from the upper clamp half when you open the clamp, retain the bolt for installation.

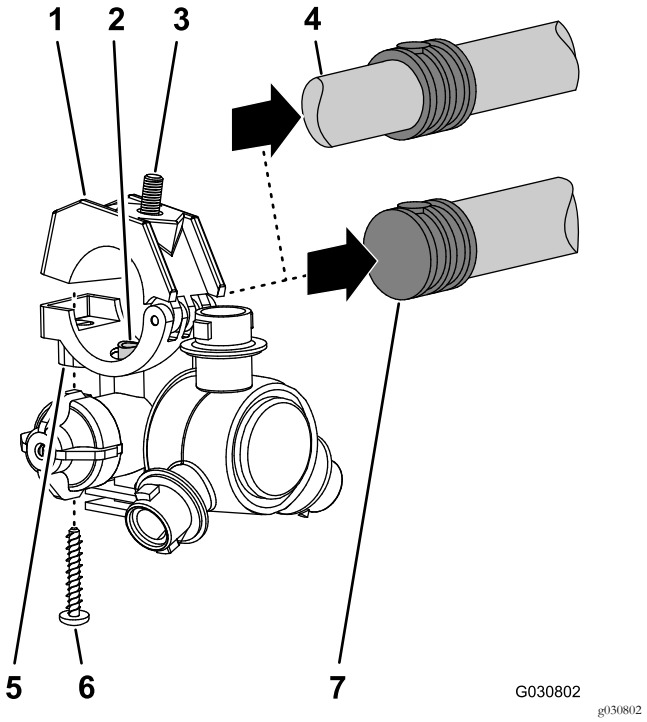

Figure 98

1. Upper clamp half
2. Transfer tube
3. Hex-head bolt (5/16 x 3/4 inch—stainless steel)
4. Double barbed-hose shank (3/4 inch hose)
5. Sprayer-nozzle body
6. Stainless steel screw (#12 x 1-1/4 inches)
7. Single barbed-hose shank (3/4 inch hose)

Assembling the Outer Boom Sections to the Machine

Lift equipment capacity: 91 kg (200 lb)

1. Using lift equipment with the specified capacity, raise the outer boom.
2. Insert a nylon-flange bushings into the 31.8 mm (1-1/4 inches) hole in each side of the pivot fitting (Figure 99).

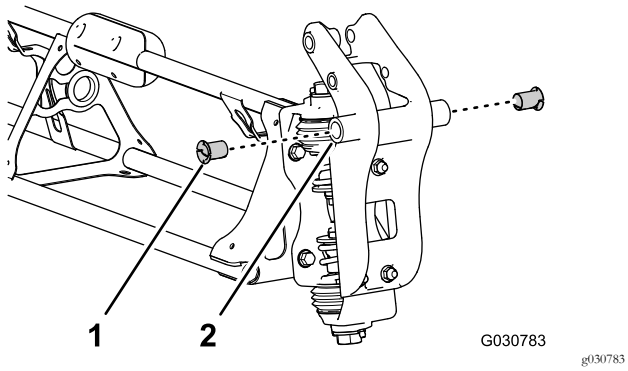

Figure 99

1. Nylon-flange bushing
2. Pivot fitting (outer boom section)

3. Align the busings in the pivot fitting with the holes in the flanges of the pivot bracket at the end of the center boom section (Figure 100).

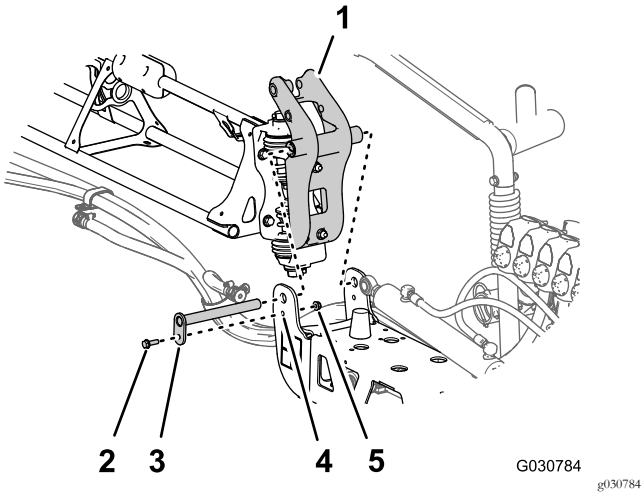

Figure 100

1. Pivot fitting (outer boom section)
2. Flange bolt (5/16 x 1 inch)
3. Pivot pin
4. Pivot bracket (center boom section)
5. Flange locknut (5/16 inch)

4. Assemble the pivot fitting to the pivot bracket with the pivot pin, flange bolt (5/16 x 1 inch), and flange locknut (5/16 inch) that you removed in step 1 and 2 of Removing the Outer Boom Sections (page 28).
5. Torque the bolt and nut to 1978 to 2542 N·cm (175 to 225 in-lb).
6. Align the rod end of the lift cylinder with the hole 25 mm (1 inch) in the horn of the pivot fitting (Figure 101).

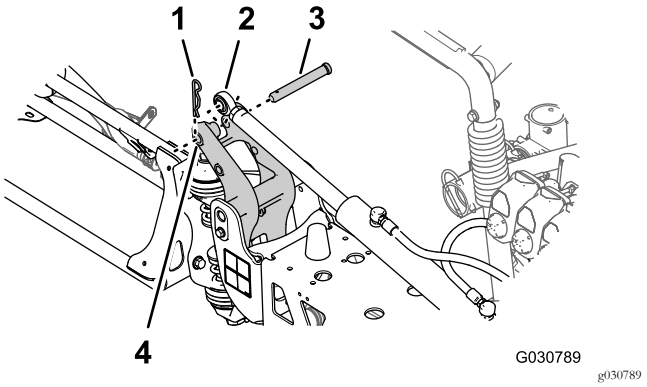

Figure 101

1. Hairpin
2. Rod end (lift cylinder)
3. Clevis pin
4. 25 mm (1 inch) hole—horn of the pivot-fitting

7. Secure the lift cylinder to the pivot fitting with the clevis pin and hairpin (Figure 101) that you removed in step 3 of Removing the Lift Cylinder (page 27).
8. Repeat steps 1 through 7 at the outer boom section at the other side of the machine.

21

Installing the Sprayer-Nozzle Hoses

Parts needed for this procedure:

2	Supply hose—279 cm (110 inches)
2	Supply hose—234 cm (92 inches)
4	Supply hose—188 cm (74 inches)
2	Supply hose—81 cm (32 inches)

Identifying the Sprayer-Nozzle Hose Positions

Identify the supply hoses by length (Figure 102) for each of the sprayer-nozzle position as follows:

Sprayer nozzle hose-position table

Sprayer-nozzle positions—left boom section	Sprayer-nozzle positions—center boom section	Sprayer-nozzle positions—right boom section
Sprayer nozzle 1 (nozzle valve 1)—supply hose 279 cm (110 inches)	Sprayer nozzles 5 and 6 (nozzle valve 5)—supply hose 81 cm (32 inches) with 2 branch hoses	Sprayer nozzle 9 (nozzle valve 7)—supply hose 188 cm (74 inches)
Sprayer nozzle 2 (nozzle valve 2)—supply hose 234 cm (92 inches)	Sprayer nozzles 7 and 8 (nozzle valve 6)—supply hose 81 cm (32 inches) with 2 branch hoses	Sprayer nozzle 10 (nozzle valve 8)—supply hose 188 cm (74 inches)
Sprayer nozzle 3 (nozzle valve 3)—supply hose 188 cm (74 inches)		Sprayer nozzle 11 (nozzle valve 9)—supply hose 234 cm (92 inches)
Sprayer nozzle 4 (nozzle valve 4)—supply hose 188 cm (74 inches)		Sprayer nozzle 12 (nozzle valve 10)—supply hose 279 cm (110 inches)

Note: Refer to Figure 103 in Assembling the Hoses to Nozzle Valves 1 through 4 (page 47), Figure 104 in Assembling the Hoses to Nozzle Valves 5 and 6 (page 47), and Figure 105 in Assembling the Hoses to Nozzle Valves 7 through 10 (page 48) for the nozzle-valve positions.

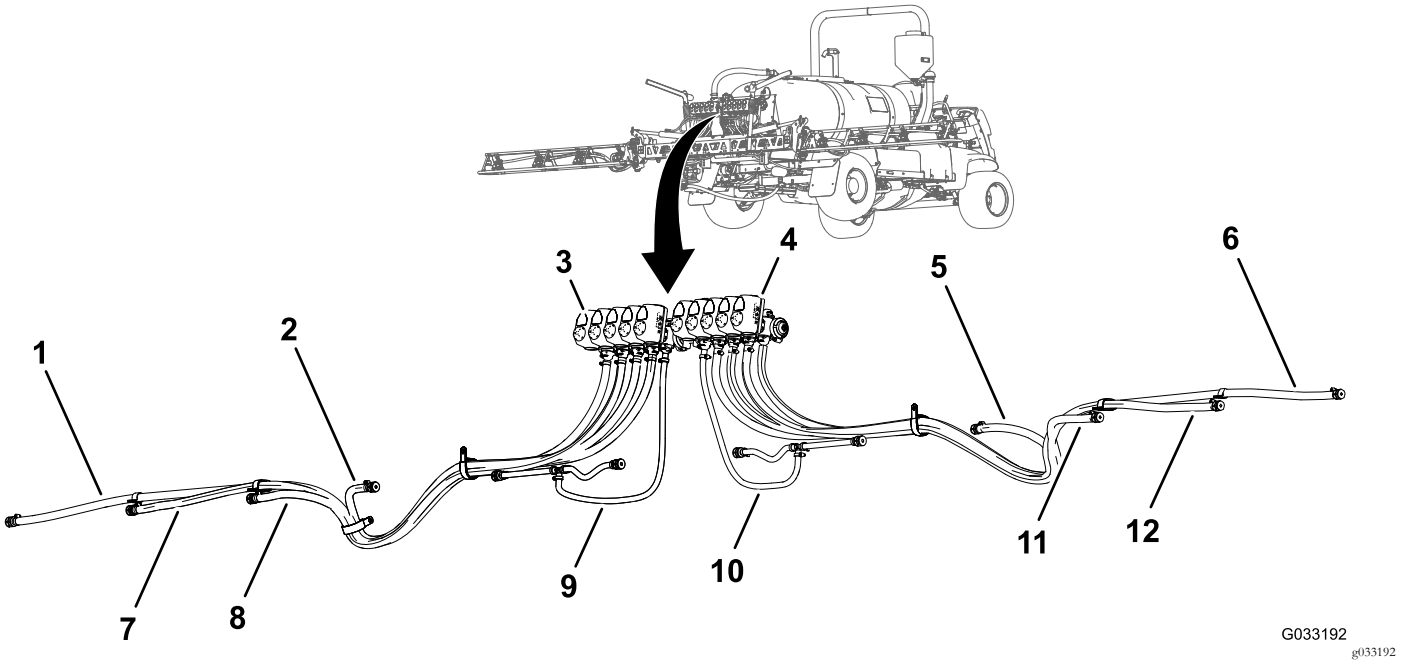

Figure 102

1. Supply hose 279 cm (110 inches)—sprayer nozzle 1
2. Supply hose 188 cm (74 inches)—sprayer nozzle 4
3. Nozzle valve 1
4. Nozzle valve 10
5. Supply hose 188 cm (74 inches)—sprayer nozzle 9
6. Supply hose 279 cm (110 inches)—sprayer nozzle 12
7. Supply hose 234 cm (92 inches)—sprayer nozzle 2
8. Supply hose 188 cm (74 inches)—sprayer nozzle 3
9. Supply hose 81 cm (32 inches)—sprayer nozzle 5 and 6
10. Supply hose 81 cm (32 inches)—sprayer nozzle 7 and 8
11. Supply hose 188 cm (74 inches)—sprayer nozzle 10
12. Supply hose 234 cm (92 inches)—sprayer nozzle 11

Assembling the Hoses to Nozzle Valves 1 through 4

1. Assemble the straight barbed fitting of a supply hose 279 cm (110 inches) onto the coupler of nozzle valve 1 (Figure 103).

   Note: Ensure that the barbed fitting fully seats onto the coupler.

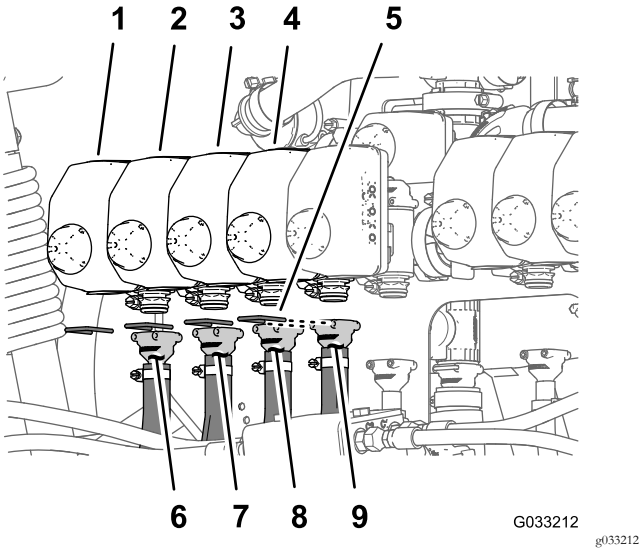

Figure 103

1. Nozzle valve 1
2. Nozzle valve 2
3. Nozzle valve 3
4. Nozzle valve 4
5. Retainer
6. Supply hose—279 cm (110 inches)
7. Supply hose—234 cm (92 inches)
8. Supply hose—188 cm (74 inches)
9. Supply hose—188 cm (74 inches)

2. Secure the barbed fitting to the coupler with a retainer (Figure 103).
3. Assemble the straight barbed fitting of a supply hose 234 cm (92 inches) onto the coupler of nozzle valve 2 (Figure 103).

   Note: Ensure that the barbed fitting fully seats onto the coupler.

4. Secure the barbed fitting to the coupler with a retainer (Figure 103).
5. Assemble the straight barbed fitting of a supply hose 188 cm (74 inches) onto the coupler of nozzle valve 3 (Figure 103).

   Note: Ensure that the barbed fitting fully seats onto the coupler.

6. Secure the barbed fitting to the coupler with a retainer (Figure 103).
7. Assemble the straight barbed fitting of a supply hose 188 cm (74 inches) onto the coupler of nozzle valve 4 (Figure 103).

   Note: Ensure that the barbed fitting fully seats onto the coupler.

8. Secure the barbed fitting to the coupler with a retainer (Figure 103).

Assembling the Hoses to Nozzle Valves 5 and 6

Note: Supply-hose assembly 81 cm (32 inches) has a T-fitting with 2 branch hoses and 2 single barbed-hose shanks.

1. Assemble the straight barbed fitting of a supply hose 81 cm (32 inches) onto the coupler of nozzle valve 5 (Figure 104).

   Note: Ensure that the barbed fitting fully seats onto the coupler.

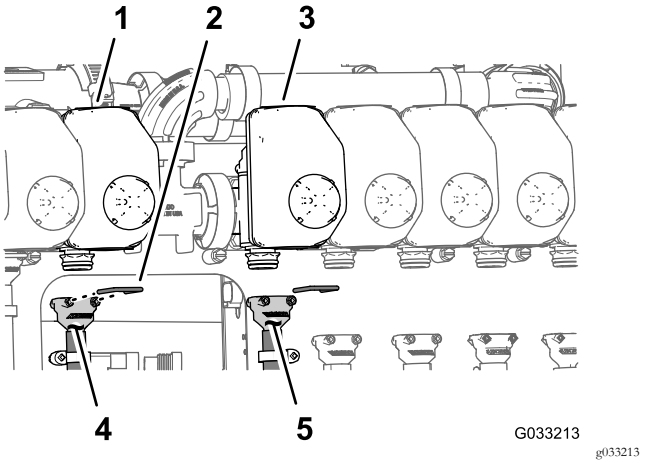

Figure 104

1. Nozzle valve 5
2. Retainer
3. Nozzle valve 6
4. Supply hose—81 cm (32 inches)
5. Supply hose—81 cm (32 inches)

2. Secure the barbed fitting to the coupler with a retainer (Figure 104).
3. Assemble the straight barbed fitting of a supply hose 81 cm (32 inches) onto the coupler of nozzle valve 6 (Figure 104).

   Note: Ensure that the barbed fitting is fully seats onto the coupler.

4. Secure the barbed fitting to the coupler with a retainer (Figure 104).

Assembling the Hoses to Nozzle Valves 7 through 10

1. Assemble the straight barbed fitting of a supply hose 188 cm (74 inches) onto the coupler of nozzle valve 7 (Figure 105).

   Note: Ensure that the barbed fitting fully seats onto the coupler.

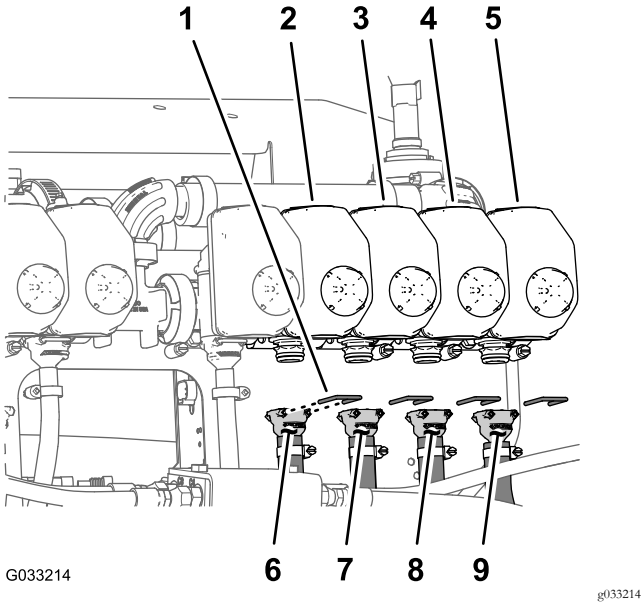

Figure 105

1. Retainer
2. Nozzle valve 7
3. Nozzle valve 8
4. Nozzle valve 9
5. Nozzle valve 10
6. Supply hose—188 cm (74 inches)
7. Supply hose—188 cm (74 inches)
8. Supply hose—234 cm (92 inches)
9. Supply hose—279 cm (110 inches)

2. Secure the barbed fitting to the coupler with a retainer (Figure 105).
3. Assemble the straight barbed fitting of a supply hose 188 cm (74 inches) onto the coupler of nozzle valve 8 (Figure 105).

   Note: Ensure that the barbed fitting fully seats onto the coupler.

4. Secure the barbed fitting to the coupler with a retainer (Figure 105).
5. Assemble the straight barbed fitting of a supply hose 234 cm (92 inches) onto the coupler of nozzle valve 9 (Figure 105).

   Note: Ensure that the barbed fitting fully seats onto the coupler.

6. Secure the barbed fitting to the coupler with a retainer (Figure 105).
7. Assemble the straight barbed fitting of a supply hose 279 cm (110 inches) onto the coupler of nozzle valve 10 (Figure 105).

   Note: Ensure that the barbed fitting fully seats onto the coupler.

8. Secure the barbed fitting to the coupler with a retainer (Figure 105).

Routing the Supply Hoses to the Sprayer Nozzles

1. Route the hoses for sprayer nozzles 1, 2, 3, and 4 through the R-clamp at the left outboard end of the center boom section (Figure 106 and Figure 107).

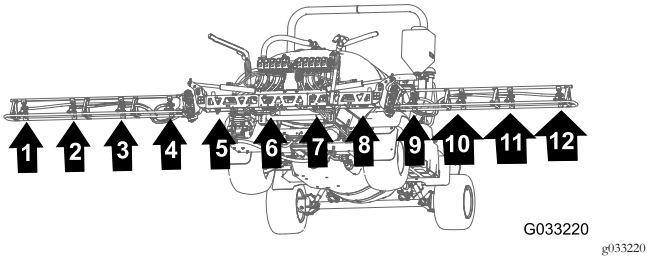

Figure 106

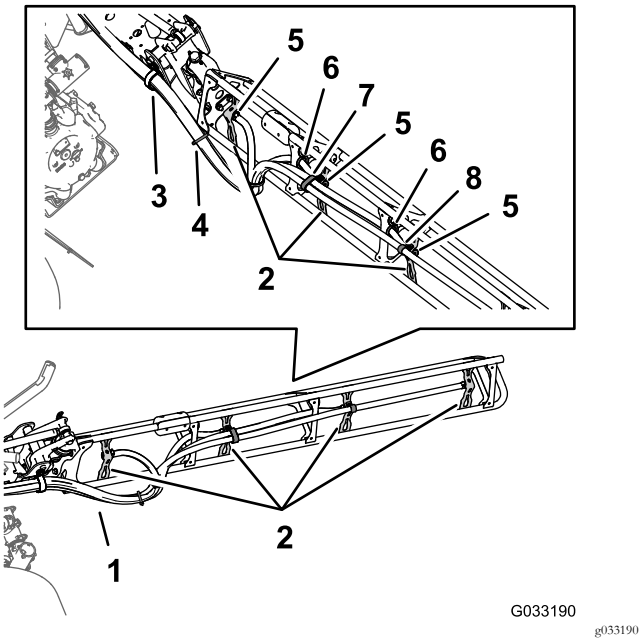

Figure 107

1. Hoses
2. Nozzle supports
3. R-clamp
4. Cable tie
5. Single barbed-hose shank (1/2 inch)
6. Grommet
7. Double R-clamp
8. Single R-clamp

2. Route the hoses for sprayer nozzles 7, 8, 9, and 10 through the R-clamp at the right outboard end of the center boom section (Figure 106 and Figure 107).

3. Route the supply hoses 279 cm (110 inches) and barbed-hose shanks (3/4 inch) along the boom section to sprayer nozzles 1 and 10 as shown in (Figure 106 and Figure 107).
4. Route the supply hoses 234 cm (92 inches) and barbed-hose shanks (3/4 inch) along the boom section to sprayer nozzles 2 and 9 along the boom section as shown in Figure 106 and Figure 107.
5. Route the supply hoses 188 cm (74 inches) and barbed-hose shanks (3/4 inch) along the boom section to sprayer nozzles 3 and 8 as shown in Figure 106 and Figure 107.

   Note: Route the hoses through the lower rear grommets in the tube-frame brackets.
6. Route the supply hoses 188 cm (74 inches) and barbed-hose shanks (3/4 inch) along the boom section to sprayer nozzles 4 and 7 as shown in Figure 106 and Figure 107.

   Note: Route the hoses through the lower rear grommets in the tube-frame brackets.
7. Bundle the 4 hoses for the sprayer nozzles together with a cable tie as shown in Figure 107.

Installing the Sprayer Nozzles at the Outer Boom Sections

1. Align the transfer tube in the saddle of a sprayer nozzle (Figure 108) with the hole in the side of the single barbed-hose shank (1/2 inch).

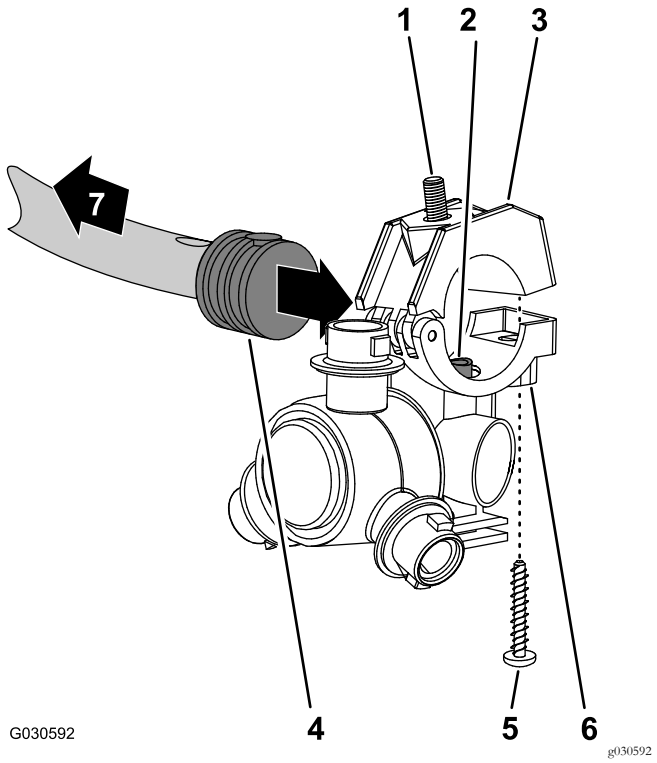

Figure 108

1. Hex-head bolt (5/16 x 3/4 inch—stainless steel)
2. Transfer tube
3. Upper clamp half
4. Single barbed-hose shank (1/2 inch)
5. Stainless steel screw (#12 x 1-1/4 inches)
6. Sprayer nozzle body
7. Toward the boom section

2. Close the upper clamp half around the barbed-hose shank and secure the clamp half and spray nozzle body (Figure 108) with the stainless steel screw (#12 x 1-1/4 inches); torque the stainless steel screw to 14 to 18 N·m (20 to 25 in-lb).

   Note: Ensure that the hex-head bolt (5/16 x 3/4 inch) is seated in the recess in the upper clamp half when closing the clamp.
3. Assemble the sprayer nozzles to the outer boom section as follows:
   - At the nozzle positions 1 and 4, assemble the sprayer nozzle to the nozzle mount (A of Figure 109) with the flange locknut (5/16 inch) that you removed in step 2 of Removing the Sprayer Nozzles from the Outer Boom Sections (page 43).
   - At the nozzle positions 2 and 3, assemble the sprayer nozzle to the nozzle mount (A and B of Figure 109) with the flange locknut (5/16 inch) that you removed in step 2 of Removing the Sprayer Nozzles from the Outer Boom Sections (page 43).

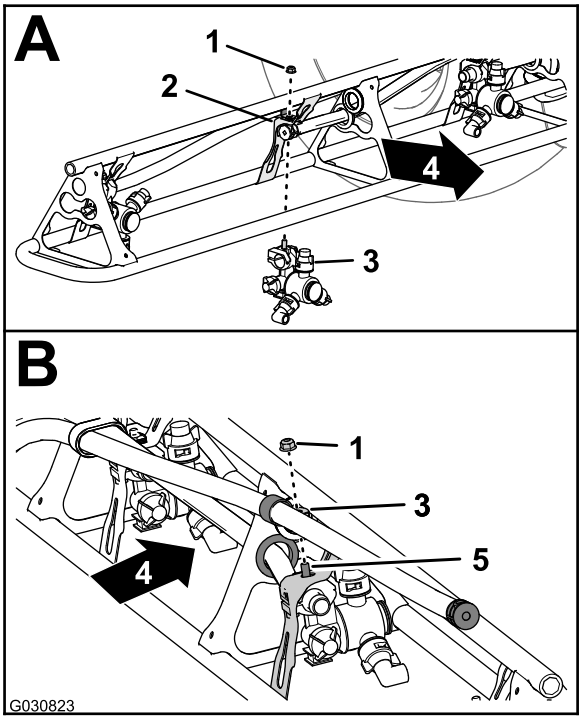

Figure 109

1. Flange locknut (5/16 inch)
2. Nozzle mount
3. Sprayer nozzle
4. Back of the machine
5. Hex-head bolt (stainless steel—5/16 x 3/4 inch)

4. Torque the flange locknut to 1978 to 2542 N·cm (175 to 225 in-lb).
5. Repeat steps 1 through 4 for the other sprayer nozzles for the boom section.
6. Repeat steps 1 through 5 to the outer boom section at the other side of the machine.

22

Assembling the Rear Wire Harness to the Machine

Parts needed for this procedure:

1	Rear wire harness
3	Cable tie

Routing the Wire Harness Along the Frame Tube

1. Locate the 165 cm (65 inches) branch and the 203 cm (80 inches) branch of the new electrical harness (Figure 110).

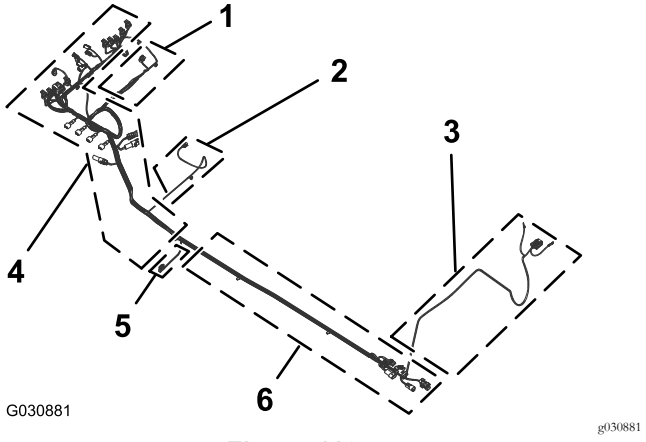

Figure 110

1. 81 cm (32 inches) wire harness branch—**flow meter and agitation valve**
2. 86 cm (34 inches) wire harness branch—**spray-pump solenoid**
3. 165 cm (65 inches) wire harness branch—ring terminals and fuse (unmarked)
4. 203 cm (80 inches) wire harness branch—**ASC10**, lift cylinder solenoids, **nozzle-valves** 1 through 10
5. 33 cm (13 inches) wire harness branch—speed sensor
6. 170 cm (67 inches) wire harness branch—front harness interface connectors

2. Route the 165 cm (65 inches) branch and the 203 cm (80 inches) branch of the new electrical harness between the valve mount for the 10 sprayer valves and right support for the manifold mount (Figure 111).

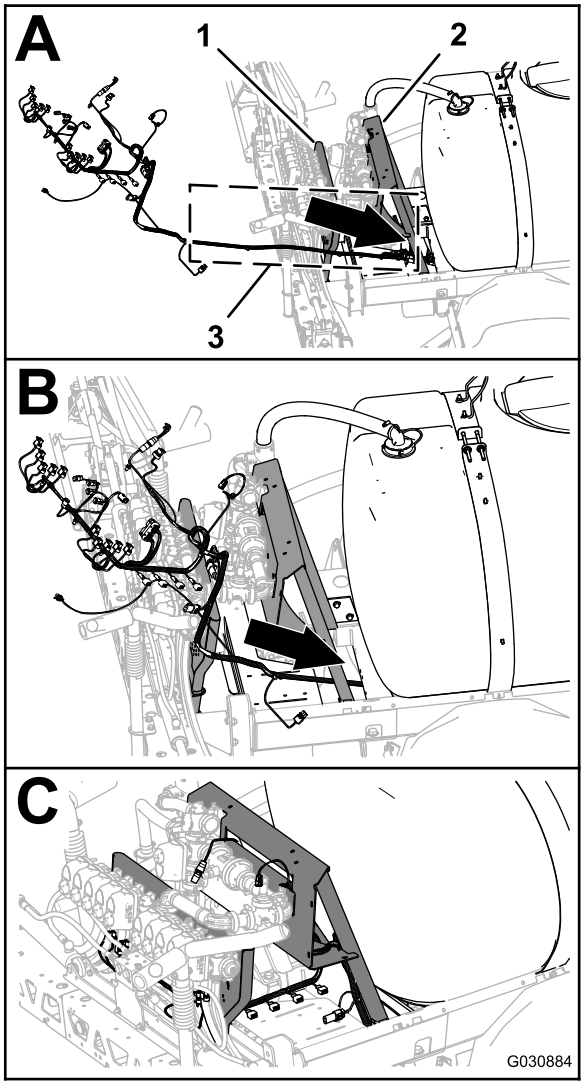

Figure 111

1. Valve mount (10 sprayer valves)
2. Manifold mount
3. 165 cm (65 inches) and 203 cm (80 inches) branches (electrical harness)

3. Route the 165 cm (65 inches) branch and the 203 cm (80 inches) branch of the electrical harness forward along the right frame tube (Figure 112).

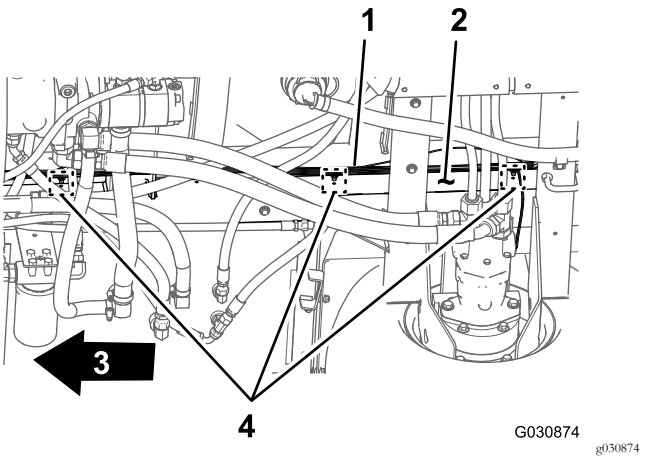

Figure 112

1. Rear wire harness—203 cm (80 inches) branch
2. Right frame tube
3. Front of the machine
4. Fir-tree anchors and cable tie locations

4. Insert the fir-tree anchors of the 203 cm (80 inches) branch of the rear wire harness into the holes in the right frame tube (Figure 112) where the fir trees of the old rear harness where removed; refer to step 3 in Disconnecting the Front and Rear Wire Harnesses (page 18).

Connecting the Front and Rear Wire Harnesses

Note: Use a machine hoist when connecting the front and rear wire harnesses.

1. From under the machine along the right frame tube, locate the electrical connectors for the front and rear wire harnesses of the machine (Figure 113).

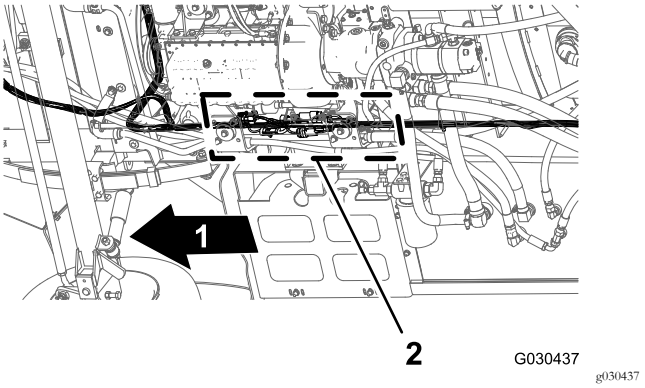

Figure 113

1. Front of the machine
2. Connector interfaces (front and rear wire harnesses)

Note: You will not use the 3-socket connector of the front harness (Figure 114).

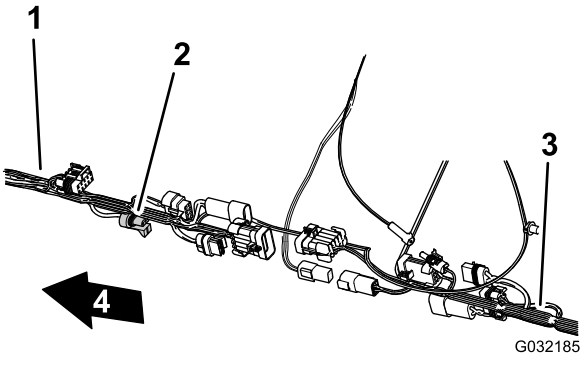

Figure 114

1. Front wire harness
2. 3-socket connector—**not used** (flow meter—front harness)
3. Rear wire harness
4. Front of the machine

2. Connect the 10-socket connector of the front harness for the sprayer-harness interconnect into the 10-pin connector of the rear harness for the sprayer-harness interconnect (Figure 115).

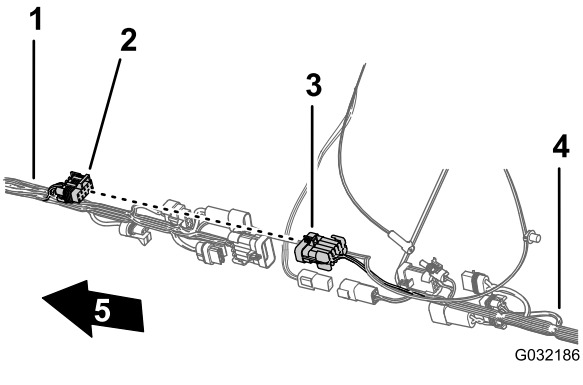

Figure 115

1. Front wire harness
2. 10-socket connector—sprayer-harness interconnect (front harness)
3. 10-pin connector—sprayer-harness interconnect (rear harness)
4. Rear wire harness
5. Front of the machine

3. Connect the 8-pin connector of the front harness for the sprayer-harness interconnect into the 8-socket connector of the rear harness for the rate switch (Figure 116).

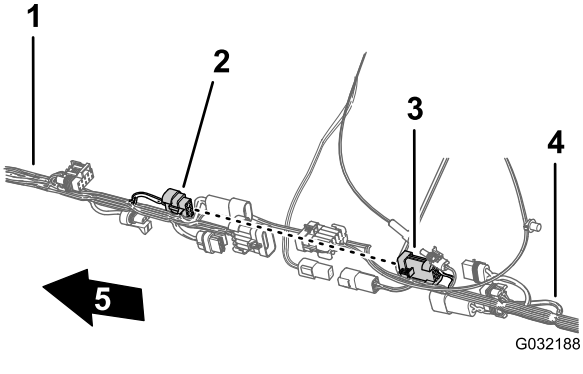

Figure 116

1. Front wire harness
2. 8-pin connector—sprayer-harness interconnect (front harness)
3. 8-socket connector—rate switch (rear harness)
4. Rear wire harness
5. Front of the machine

4. Connect the 2-pin connector of the front harness for the rinse pump into the 2-socket connector of the rear harness for the rinse pump (Figure 117).

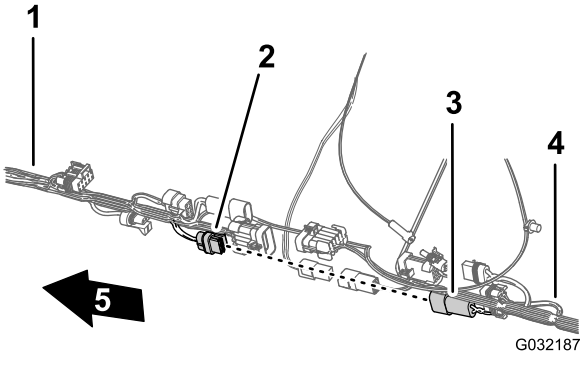

Figure 117

1. Front wire harness
2. 2-socket connector—rinse pump (rear harness)
3. 2-pin connector—rinse pump (front harness)
4. Rear wire harness
5. Front of the machine

5. Connect the 2-pin connector of the front harness for the hose-reel power into the 2-socket connector of the rear harness for the hose reel power (Figure 118).

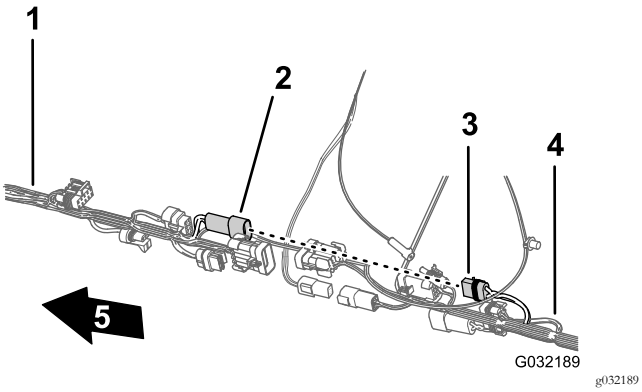

Figure 118

1. Front wire harness
2. 2-pin connector—hose reel (front harness)
3. 2-socket connector—hose reel (rear harness)
4. Rear wire harness
5. Front of the machine

6. Connect the 10-pin connector of the front harness for the sprayer-harness interconnect into the 10-socket connector of the rear harness for the sprayer-harness interconnect (Figure 119).

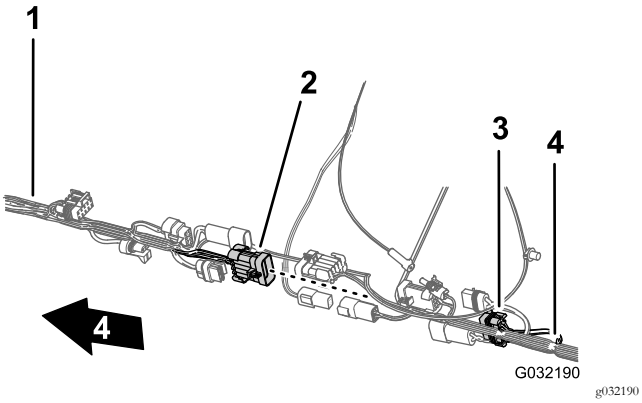

Figure 119

1. Front wire harness
2. 10-pin connector—sprayer-harness interconnect (front harness)
3. 10-socket connector—sprayer-harness interconnect (rear harness)
4. Rear wire harness
5. Front of the machine

7. To ease connecting the navigation electrical and data harnesses, ensure that the 1-socket connector of the rear wire harness and the 4-socket connector of the rear wire harness are aligned to the top of the harness (Figure 120).

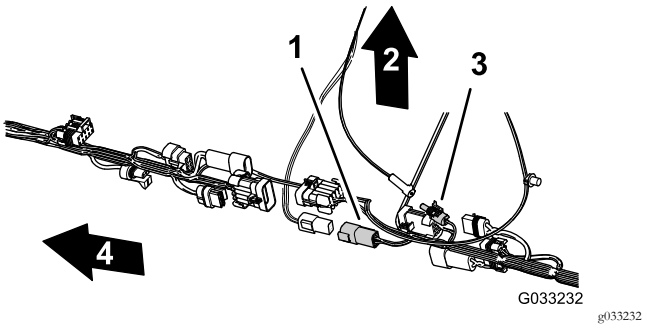

Figure 120

1. 4-socket connector (rear wire harness)
2. Top of the machine
3. 1-socket connector (rear wire harness)
4. Front of the machine

Routing the Pressure-Sense Tube for the Dash Gauge along the Rear Wire Harness

1. Route the pressure-sense tube for the dash gauge along the rear wire harness of the machine (Figure 121).

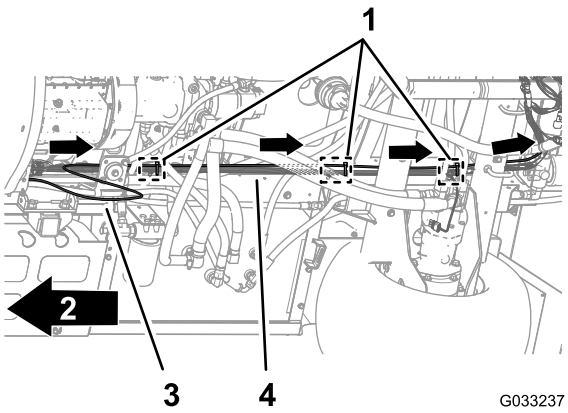

Figure 121

1. Cable ties (3 fir-tree anchors—chassis anchor points)
2. Front of the machine
3. Pressure-sense tube
4. Rear wire harness

2. Secure the pressure-sense tube to the rear wire harness with 3 cable ties adjacent to the 3 fir-tree anchors at the chassis anchor points for the rear wire harness (Figure 121).

Important: Do not pinch or collapse the pressure-sense tube; tighten the cable ties only enough to support the tube.

23

Installing the Engine-Control Module and Mounting Bracket (Machines with a Gasoline Engine Only)

No Parts Required

Procedure

1. Align the holes in the mounting bracket for the engine-control module with the hole in the support bracket of the engine and accessory case of the engine (Figure 122).

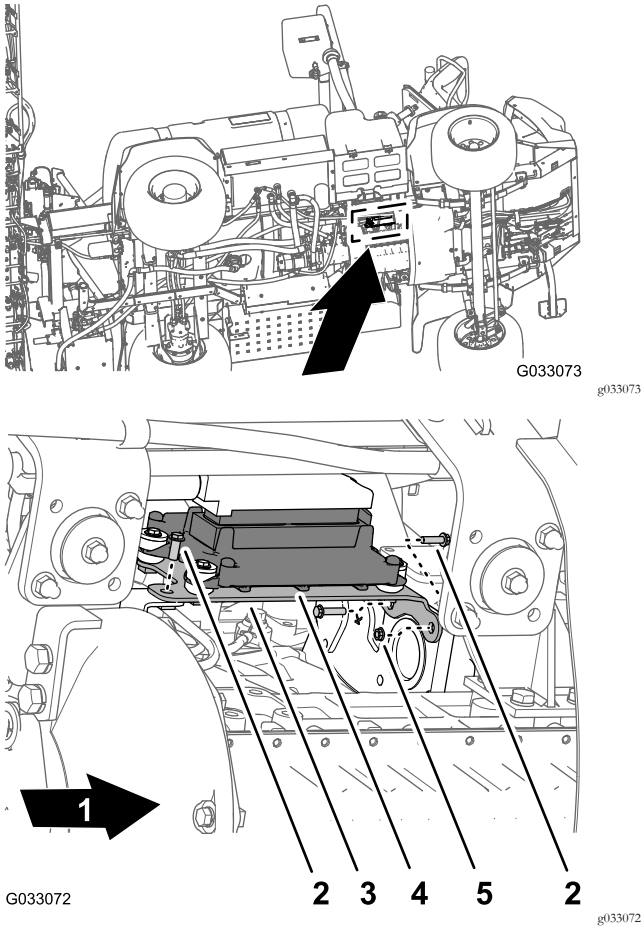

Figure 122

1. Front of the machine
2. Flange-head bolt
3. Mounting bracket
4. Engine-control module
5. Flange nut

2. Assemble the mounting bracket to the engine with the 3 flange head bolts and 1 flange nut that you removed in step 1 of 8 Removing the Engine-Control Module and Mounting Bracket (for Machines with a Gasoline Engine Only) (page 15); tighten the bolts and nuts by hand.

24

Installing the Undercarriage Shroud

No Parts Required

Procedure

1. Align the undercarriage shroud to the bottom chassis of the machine (Figure 123).

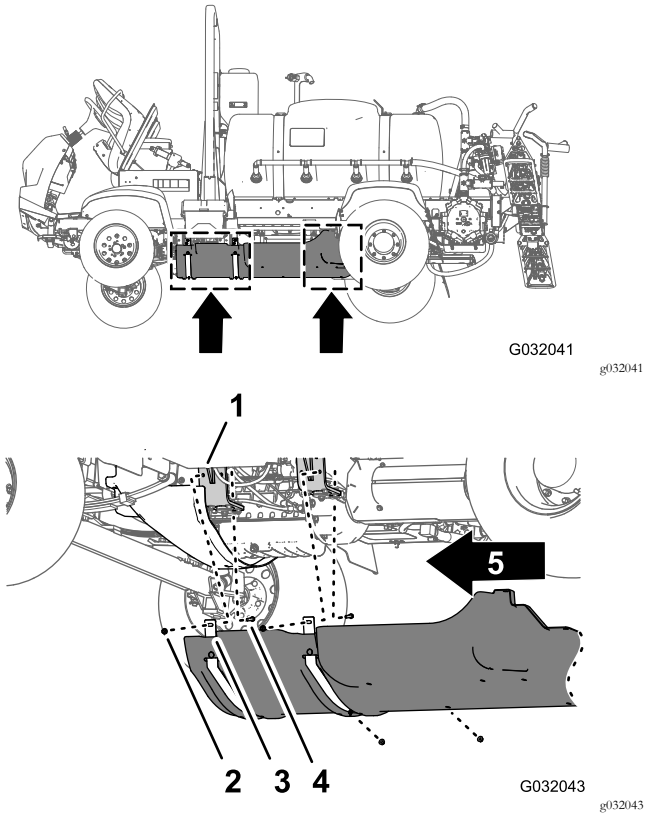

Figure 123

1. Undercarriage shroud
2. Flange-head bolts (5/16 x 7/8 inch)
3. Washers (5/16 inch)
4. Flange locknuts (5/16 inch)
5. Front of the machine

2. Slip the support straps of the undercarriage shroud over the bolts and carriage bolt at the engine-mount brackets of the machine (Figure 123).

3. Assemble the undercarriage shroud to the engine-mount brackets and bolts (Figure 123) with the 4 flange locknuts (5/16 inch) that you removed in step 2 of 7 Removing the Undercarriage Shroud (page 14).

4. Align the holes in the rear part of the undercarriage shroud with the holes in the chassis (Figure 124).

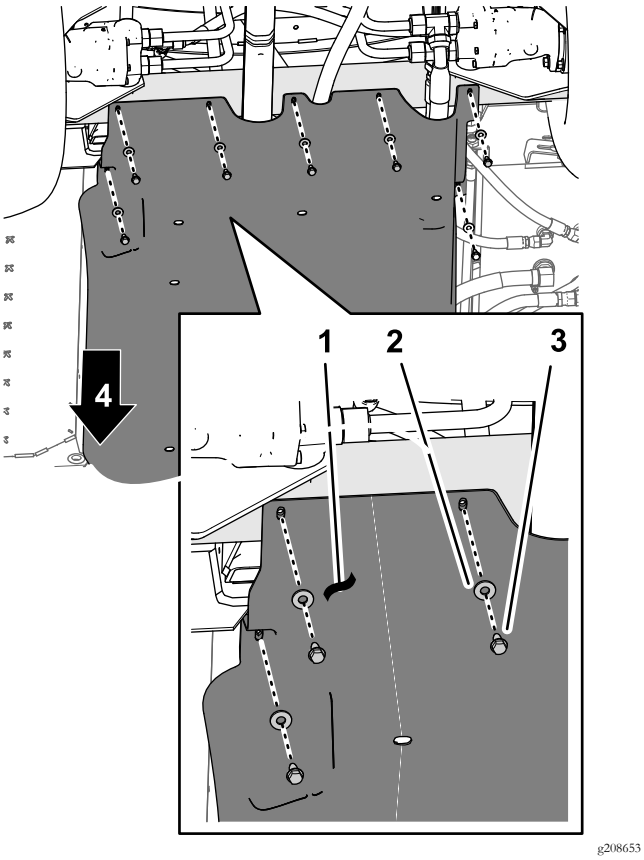

Figure 124

1. Undercarriage shroud
2. Washers (5/16 inch)
3. Flange-head bolts (5/16 x 7/8 inch)
4. Front of the machine

5. Assemble the rear part of the undercarriage shroud to the chassis with the 7 flange-head bolts (5/16 x 7/8 inch) and 7 washers (5/16 inch) that you removed in step 1 of 7 Removing the Undercarriage Shroud (page 14) (Figure 124).

6. Torque the nuts and bolts to 1129 to 1582 N·cm (100 to 140 in-lb).

25

Connecting the Rear Wire Harness

No Parts Required

Routing the Wire Harness at the Manifold Mount

1. Route the 203 cm (80 inches) branch of the wire harness inboard of the support strut for the valve mount and rearward toward the 10-valve mount as shown in Figure 125.

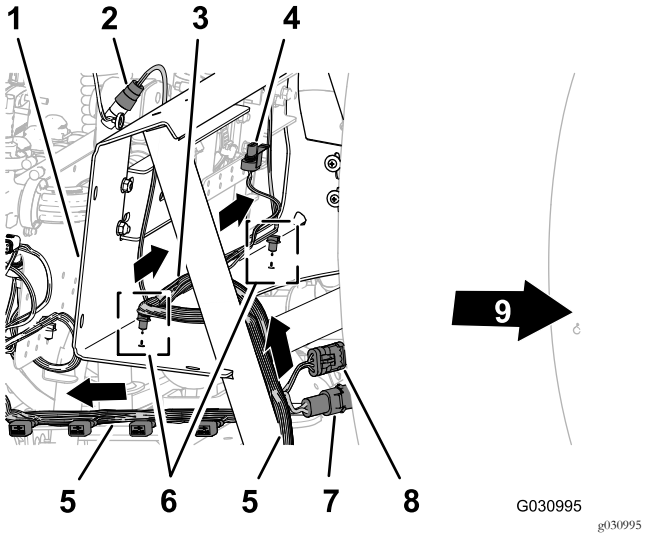

Figure 125

1. Manifold mount
2. 3-socket connector (flow meter)
3. 81 cm (32 inches) wire harness branch—flow meter and agitation valve
4. Electrical connector (Agitation valve)
5. 203 cm (80 inches) wire harness branch—ASC10, lift-cylinder solenoids, nozzle valves 1 through 10
6. Fir-tree anchors
7. 2-pin connector (hose-reel power)
8. 3-socket connector (hose reel)
9. Front of the machine

2. Route the 81 cm (32 inches) wire harness branch for the flow meter and agitation valve across the front of the manifold mount (Figure 125).

3. Insert the fir-tree anchors of the 81 cm (32 inches) wire harness branch into the holes in the lower flange of the manifold mount (Figure 125).

Routing the Wire Harness at the 10-Valve Mount

1. Route the 203 cm (80 inches) wire harness branch across the back of the 10-valve mount with the 10 connectors for the nozzle valves rearward and below the valves (Figure 126).

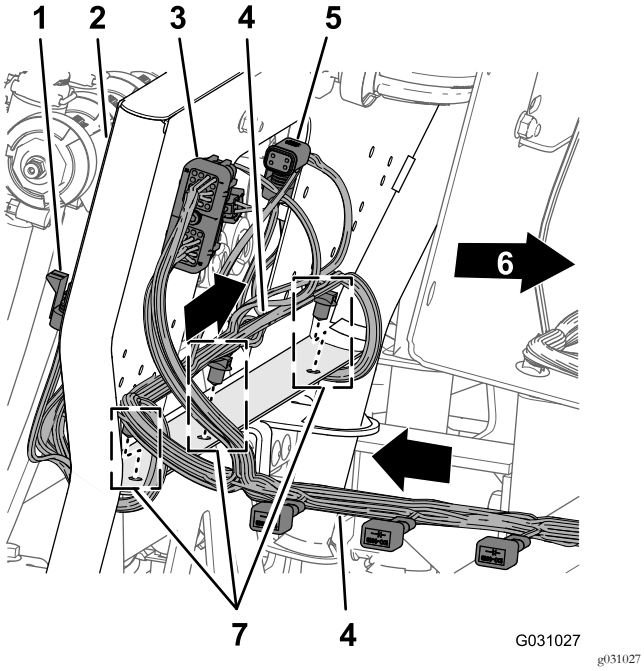

Figure 126

1. 3-socket connector (nozzle-valve position 10)
2. 10-valve mount
3. 40-socket connector (ASC 10)
4. 203 cm (80 inches) wire harness branch—ASC10, lift-cylinder solenoids, nozzle valves 1 through 10
5. 4-socket connector (To ASC 10)
6. Front of the machine
7. Fir-tree anchors

2. Insert the fir-tree anchors of the 203 cm (80 inches) wire harness branch into the holes in the lower flange of the 10-valve mount (Figure 126).

Routing the Wire Harness for the Sprayer Pump

1. Route the 86 cm (34 inches) wire harness branch for the spray-pump solenoid across the top of the sprayer frame channel and down toward the sprayer-pump solenoid (Figure 127).

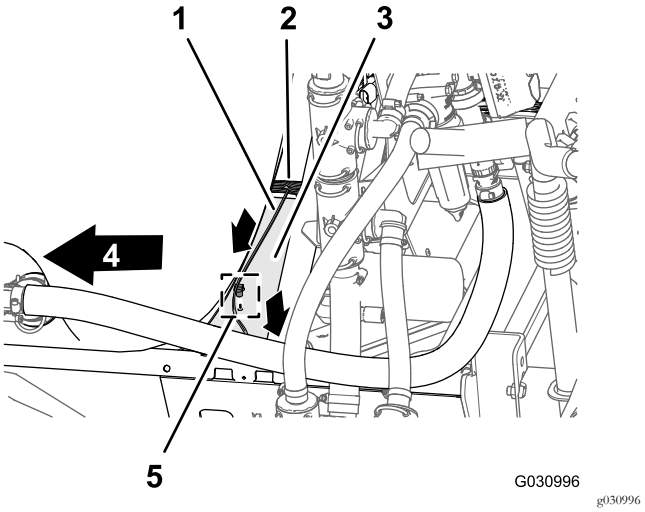

Figure 127

1. 86 cm (34 inches) wire harness branch—sprayer-pump solenoid
2. 203 cm (80 inches) wire harness branch—ASC10, lift-cylinder solenoids, nozzle valves 1 through 10
3. Channel (sprayer frame)
4. Front of the machine
5. Fir-tree anchor

2. Insert the fir-tree anchor of the 86 cm (34 inches) wire harness branch into the hole in the sprayer frame channel (Figure 127).

Connecting the Wire Harness to the Manifold Mount Components

1. Route the connectors of the 203 cm (80 inches) wire harness branch labeled **Flow Meter** and **Pressure Transducer** rearward of the manifold mount (Figure 128).

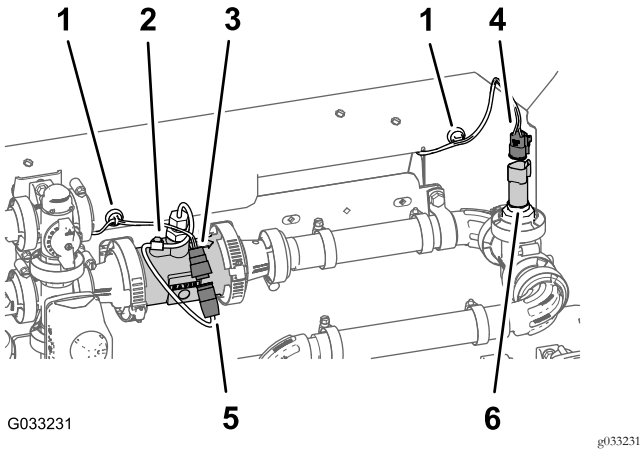

Figure 128

1. Magnetic-harness anchor
2. Flow meter
3. 3-socket connector (rear wire harness—labeled Flow Meter)
4. 3-socket connector (rear wire harness—labeled Pressure Transducer)
5. 3-pin connector (flow-meter harness)
6. 3-pin connector (pressure transducer)

2. Connect the 3-socket connector of the 203 cm (80 inches) wire harness branch for the flow meter (not labeled) into the 3-pin connector of the harness of the flow meter (Figure 128).
3. Connect the 3-socket connector of the 203 cm (80 inches) wire harness branch for the labeled **Pressure Transducer** into the 3-pin connector of the pressure transducer (Figure 128).
4. Adhere the magnet-harness anchors for the flow meter and the pressure transducer onto the surface of the manifold mount (Figure 128).
5. Route the 3-pin connector for the harness of the agitation valve forward of the manifold mount (Figure 129).

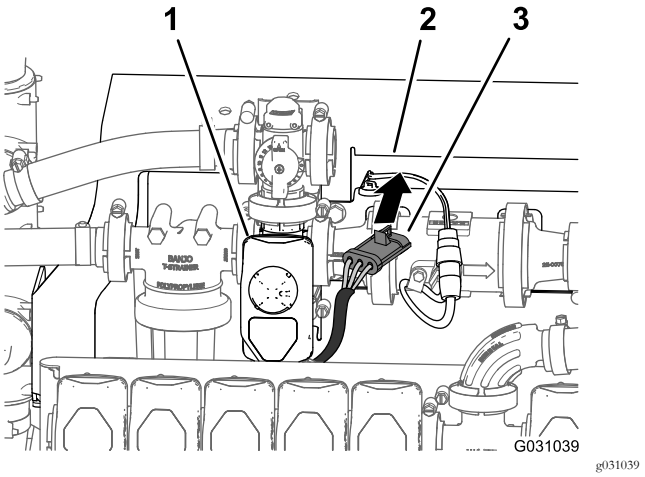

Figure 129

1. Agitation valve
2. Manifold mount
3. 3-socket connector (agitation-valve harness)

6. Connect the 3-pin connector for the harness of the agitation valve into the 3-socket connector of the 203 cm (80 inches) wire harness branch labeled **Agitation Valve** (Figure 130).

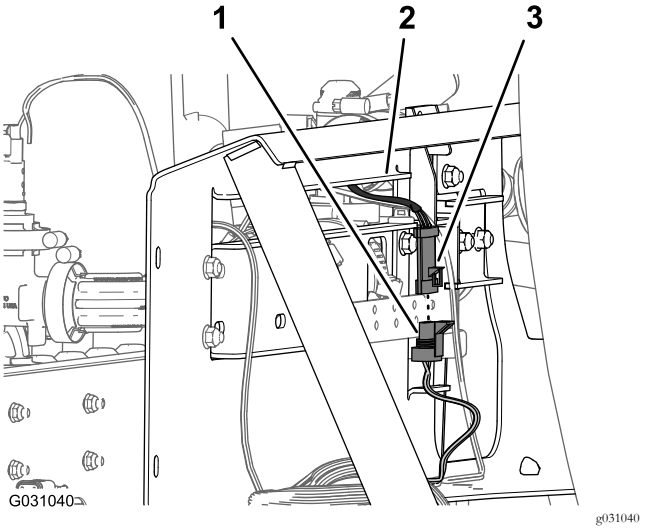

Figure 130

1. 3-pin connector (rear wire harness—labeled Agitation Valve)
2. Manifold mount
3. 3-socket connector (agitation-valve harness)

Connecting the Wire Harness to the Solenoids for the Lift-Cylinder Manifold

1. At the bottom of the lift-cylinder manifold, connect the 2-socket connector of the rear wire harness labeled **Enable Solenoid** into the 2–pin connector for the enable solenoid (Figure 131 and Figure 132).

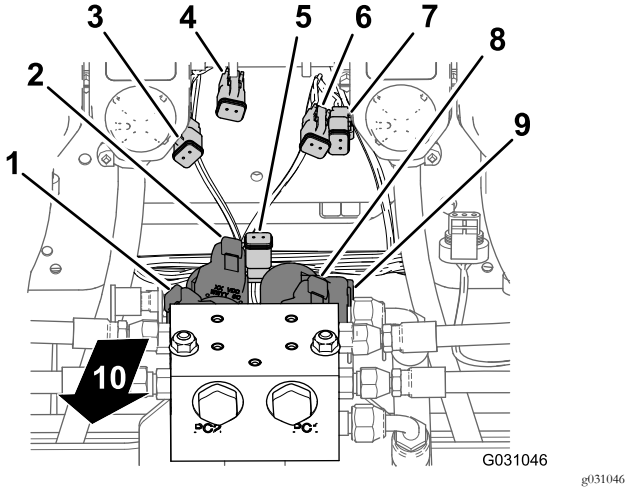

Figure 131

1. 2-pin connector—left down solenoid (lift-cylinder manifold)
2. 2-pin connector—left up solenoid (lift-cylinder manifold)
3. 2-socket connector—Left Down (main-harness connector)
4. 2-socket connector—Left Up (main-harness connector)
5. 2-socket connector—Enable Solenoid (main-harness connector)
6. 2-socket connector—Right Up (main-harness connector)
7. 2-socket connector—Right Up (main-harness connector)
8. 2-pin connector—right up solenoid (lift-cylinder manifold)
9. 2-pin connector—right down solenoid (lift-cylinder manifold)
10. Back of the machine

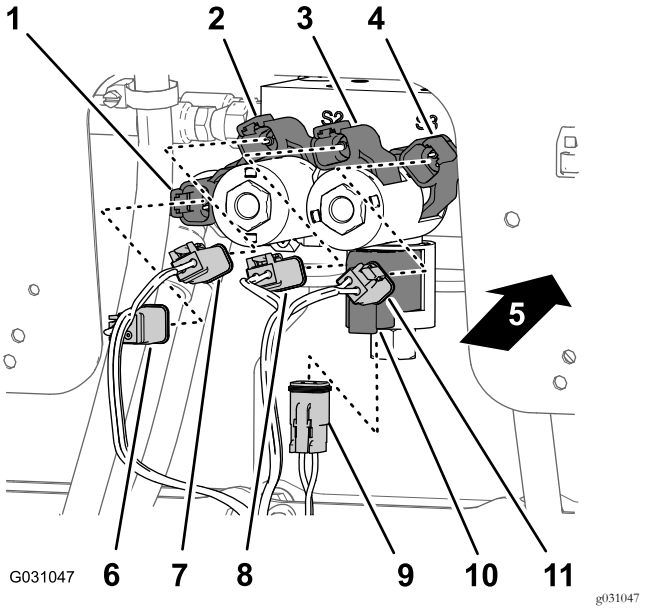

Figure 132

1. 2-pin connector—right down solenoid (lift-cylinder manifold)
2. 2-pin connector—right up solenoid (lift-cylinder manifold)
3. 2-pin connector—left up solenoid (lift-cylinder manifold)
4. 2-pin connector—left down solenoid (lift-cylinder manifold)
5. Back of the machine
6. 2-socket connector—Right Down (main-harness connector)
7. 2-socket connector—Right Up (main-harness connector)
8. 2-socket connector—Left Up (main-harness connector)
9. 2-socket connector—Enable Solenoid (main-harness connector)
10. 2–pin connector—enable solenoid (lift-cylinder manifold)
11. 2-socket connector—Left Down (main-harness connector)

2. At the lower right solenoid, connect the 2-socket connector of the rear wire harness labeled **Right Down** into the 2–pin connector for the right down solenoid (Figure 131 and Figure 132).
3. At the upper right solenoid, connect the 2-socket connector of the rear wire harness labeled **Right Up** into the 2–pin connector for the right up solenoid (Figure 131 and Figure 132).
4. At the lower left solenoid, connect the 2-socket connector of the rear wire harness labeled **Left Down** into the 2–pin connector for the left down solenoid (Figure 131 and Figure 132).
5. At the upper left solenoid, connect the 2-socket connector of the rear wire harness labeled **Left Up** into the 2–pin connector for the left up solenoid.

Connecting the Wire Harness to the Sprayer Valves

1. Route the 3-socket connectors of the 203 cm (80 inches) wire harness branch with labels **Nozzle Valve 1** through **Nozzle Valve 5** rearward of the 10-valve mount and below nozzle valves 1 through 5 (Figure 133).

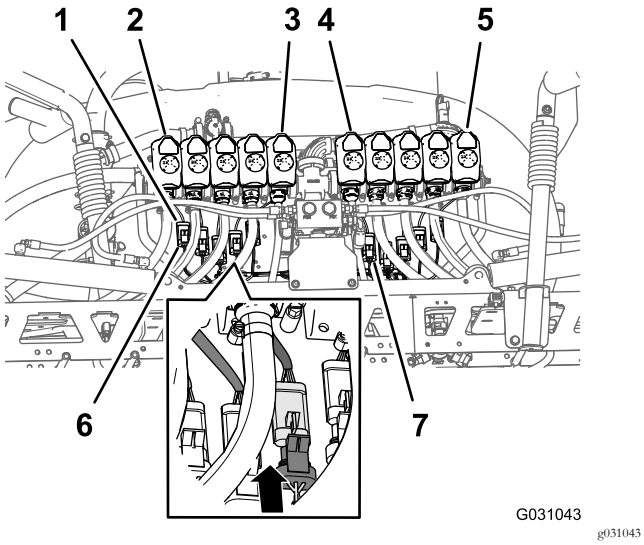

Figure 133

1. 3-pin connector (nozzle-valve harness)
2. Nozzle-valve 1
3. Nozzle-valve 5
4. Nozzle-valve 6
5. Nozzle-valve 10
6. 3-pin socket connector (rear wire harness—labeled Nozzle 1)
7. 3-pin socket connector (rear wire harness—labeled Nozzle 6)

2. Route the 3-socket connectors of the 203 cm (80 inches) wire harness branch with labels **Nozzle Valve 6** through **Nozzle Valve 10** rearward of the 10-valve mount and below nozzle valves 6 through 10 (Figure 133).

3. Connect the 3-pin socket connector of the rear wire harness labeled **Nozzle 1** to the 3-pin connector of the harness for nozzle valve 1 (Figure 133).

Important: It is important that you connect each labeled 3-pin socket connector of the rear wire harness to the correct 3-pin connector at each nozzle-valve position.

4. Repeat step 3 at the nozzle-valve positions 2 through 10 (Figure 133).

Connecting the Wire Harness to the Sprayer Pump and the Speed Sensor

1. At the back of the machine (inboard of the sprayer pump), connect the 2-socket connector labeled **Spray Pump Solenoid** of the 86 cm (34 inches) wire harness branch into the 2-pin connector of the relay for the pump (Figure 134).

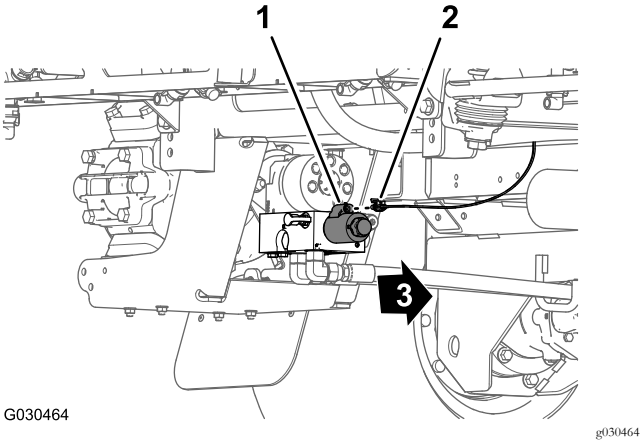

Figure 134

1. 2-pin connector (pump relay)
2. 2-socket connector—86 cm (34 inches) wire harness branch
3. Front of the machine

2. At back of the machine (between the right frame tube and the right fender) connect the 3-pin connector of the speed-sensor harness at the right hydraulic-traction motor from the 3-socket connector (unmarked) of the rear, main harness (Figure 135).

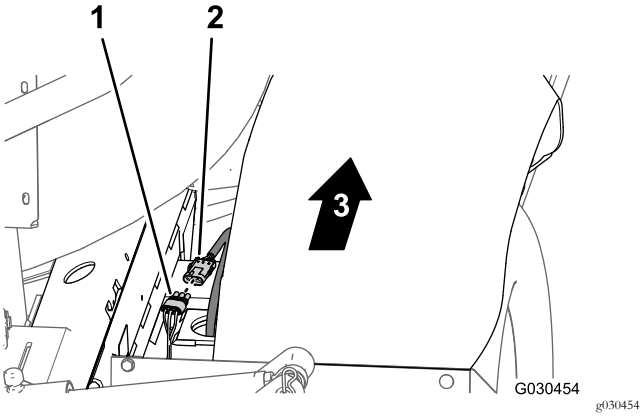

Figure 135

1. 3-socket connector (rear main harness)
2. 3-pin connector (hydraulic-motor harness
3. Front of the machine

Routing the Wire Harness through the Engine Compartment

1. Route the 165 cm (65 inches) branch of the wire harness up and into the rear part of the engine compartment, along the right support for the engine shroud—forward of the duct that connects the air filter and the engine (Figure 136).

   Note: You will secure the 165 cm (65 inches) branch of the rear wire harness in Routing the Navigation Electrical Harness to the Battery (page 70).

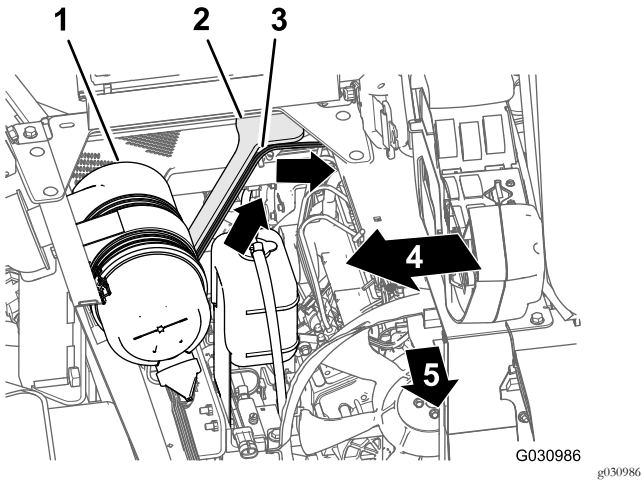

Figure 136

1. Air filter (engine)
2. Engine-shroud support (right)
3. 165 cm (65 inches) branch (rear wire harness)
4. Right side of the machine
5. Front of the machine

2. Route the 165 cm (65 inches) branch of the wire harness across the seat-box angle and down along the left support for the engine shroud (Figure 137).

   Note: You will secure the 165 cm (65 inches) branch of the rear wire harness in Routing the Navigation Electrical Harness to the Battery (page 70).

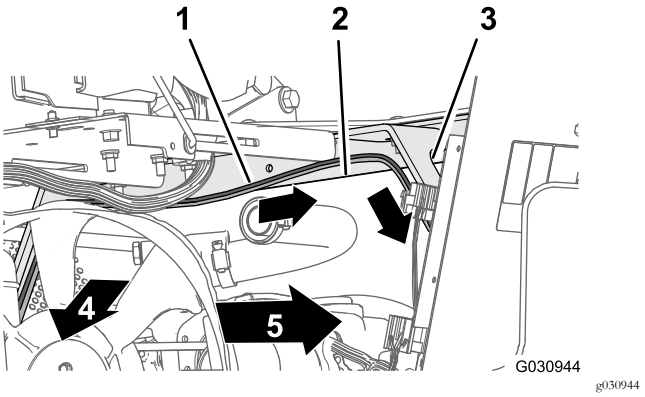

Figure 137

1. 165 cm (65 inches) branch (rear wire harness)
2. Seat-box angle
3. Engine-shroud support (left)
4. Front of the machine
5. Left side of the machine

3. Route the 165 cm (65 inches) branch of the wire harness down along the left support for the engine shroud and under the left frame tube (Figure 138).

   Note: You will secure the 165 cm (65 inches) branch of the rear wire harness in Routing the Navigation Electrical Harness to the Battery (page 70).

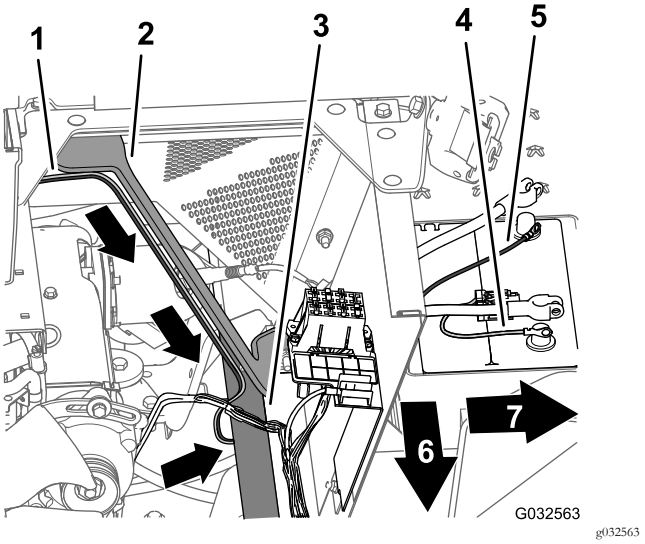

Figure 138

1. 165 cm (65 inches) branch (rear wire harness)
2. Engine-shroud support (left)
3. Left frame tube
4. Positive terminal (red wire)—165 cm (65 inches) branch (rear wire harness)
5. Negative terminal (black wire)—165 cm (65 inches) branch (rear wire harness)
6. Front of the machine
7. Left side of the machine

4. Route the 50 A fuse and the positive and negative ring terminals of the 165 cm (65 inches) branch of the wire harness to the top of the battery (Figure 138).

Note: You will complete the installation of the ring terminals in Assembling the Rear Harness and Navigation Electrical Harness to the Battery Cables (page 73).

26

Connecting the Pressure-Sense Tube for the Dash Gauge

No Parts Required

Connecting the Pressure-Sense Tube for the Dash Gauge

Machines Without an Optional Hose Reel Kit

1. Align the end of the pressure-sense tube (plastic) for the pressure gauge in the dash with the locking collar for the tube coupler (Figure 139).

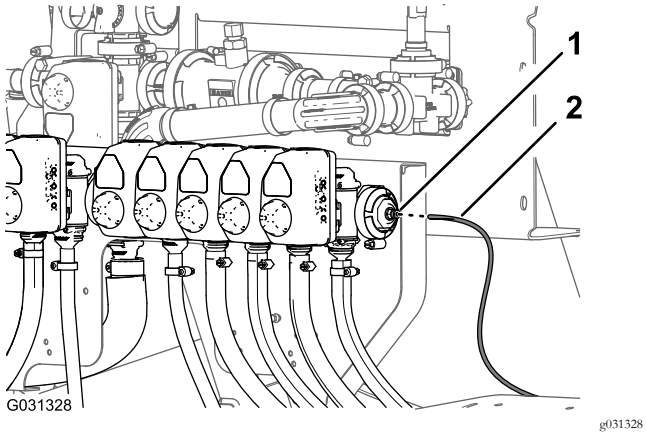

Figure 139

1. Locking collar (tube coupler)
2. Pressure-sense tube (dash pressure gauge)

2. Insert the sense tube into the locking collar until the tube is fully seated (Figure 139).

Connecting the Pressure-Sense Tube

Optional Spray Gun Kit or Optional Pivoting Hose Reel Kit

1. Align the end of the pressure-sense tube (plastic) for the pressure gauge in the dash with the locking collar for the tube coupler (Figure 140 and Figure 141).

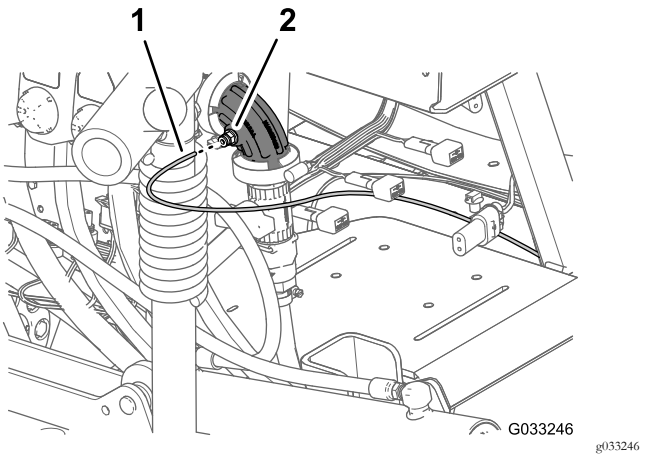

Figure 140

Optional Spray Gun Kit

1. Pressure-sense tube (dash gauge)
2. Tube coupler (90° elbow—nozzle valve 10)

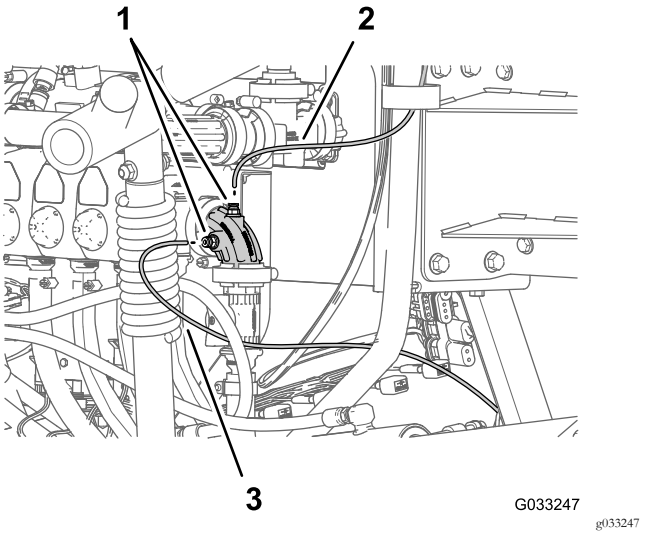

Figure 141

Optional Pivoting Hose Reel Kit

1. Pressure-sense tube (pivoting-reel gauge)
2. Tube couplers (90° elbow—nozzle valve 10)
3. Pressure-sense tube (dash gauge)

2. Insert the sense tube into the locking collar until the tube fully seats (Figure 140 and Figure 141).

27

Installing the Navigation Receiver

Parts needed for this procedure:

1	Navigation receiver—GeoLink precision spray system kit (Model 41623)
1	Receiver mount
2	U-bolt
1	RTK-antenna bracket (optional CDMA RTK correction modem kit or GSM RTK correction modem kit)
4	Flange locknut (3/8 inch)
3	Hex-head bolt (5 x 16 mm)
3	Washer (5 mm)
1	Cellular antenna (optional CDMA RTK correction modem kit or GSM RTK correction modem kit)
1	Coaxial cable (optional CDMA RTK correction modem kit or GSM RTK correction modem kit)
1	Serial label (part of the X25 or the X30 GeoLink Precision Spray System Kits)

Assembling the Navigation Receiver to the Machine

1. Align the slot that is in the center of the receiver mount with the weld seam at the centerline of the ROPS tube (Figure 142).

   Note: Ensure that the larger flange with 2 holes is rearward of the ROPS tube and the smaller flange with 1 hole is forward.

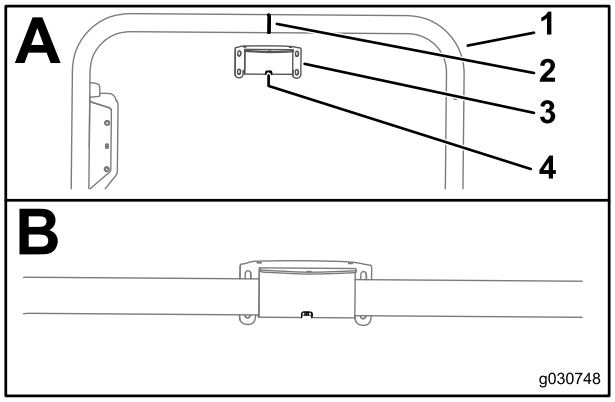

g030748

Figure 142

1. ROPS Tube
2. Weld seam (ROPS tube)
3. Receiver mount
4. Slot

2. Assemble the receiver mount to the ROPS tube as follows:

   - If your machine is configured with global navigation satellite system (GNSS) with wide area augmentation system (WAAS), assemble the receiver mount to the ROPS tube (Figure 143) with the 2 U-bolts and 4 flange locknuts (3/8 inch).

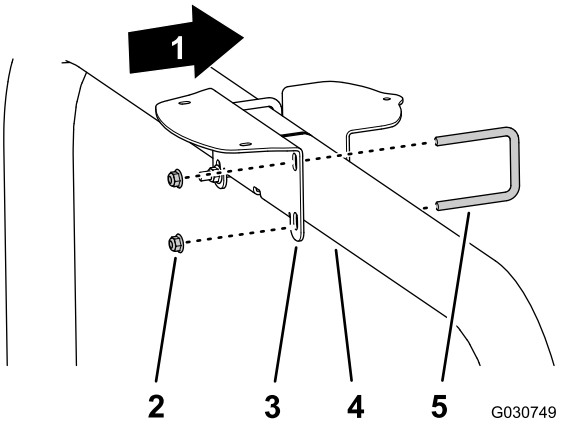

g030749

Figure 143

1. Front of the machine
2. Flange locknuts (3/8 inch)
3. Receiver mount
4. ROPS tube
5. U-bolt

   - If your machine has GNSS and the CDMA or GSM RTK correction modem kit, assemble the receiver mount and RTK-antenna bracket to the ROPS tube (Figure 144) with the 2 U-bolts and 4 flange locknuts (3/8 inch).

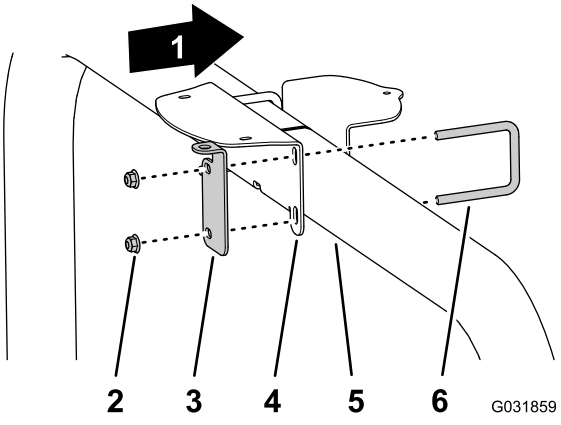

g031859

Figure 144

1. Front of the machine
2. Flange locknuts (3/8 inch)
3. RTK-antenna bracket
4. Receiver mount
5. ROPS tube
6. U-bolt

3. Torque the nuts to 37 to 45 N·m (27 to 33 ft-lb).
4. Align the 3 threaded in the base of the navigation receiver to the 3 holes in the receiver mount (Figure 145).

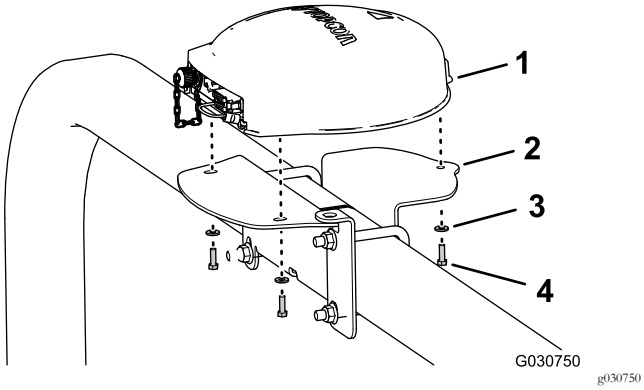

Figure 145

Shown with RTK-antenna bracket; machines with GNSS only are similar

1. Navigation receiver
2. Receiver mount
3. Washers (5 mm)
4. Hex-head bolt (5 x 16 mm)

5. Assemble the receiver to the mount (Figure 145) with the 3 hex-head bolt (5 x 16 mm) and 3 washers (5 mm).
6. Torque the 3 bolts to 576 to 712 N·cm (51 to 63 in-lb).
7. Apply the serial label to the receiver mount (Figure 146).

   Note: The label is part of the X25 or the X30 GeoLink Precision Spray System Kits.

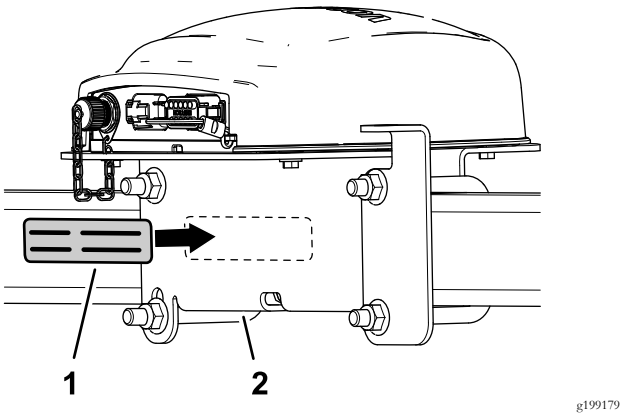

Figure 146

1. Serial label
2. Receiver mount

Installing the RTK Antenna to the Navigation Receiver

Note: Install the RTK antenna when your machine is equipped with a CDMA RTK or GSM RTK correction modem.

1. Align the coaxial coupler through the opening in RTK-antenna bracket with the bulkhead threads of the coupler down (Figure 147).

   Note: Rotate the coaxial coupler as needed to align the flat of the bulkhead threads with the flat at the opening in RTK-antenna bracket.

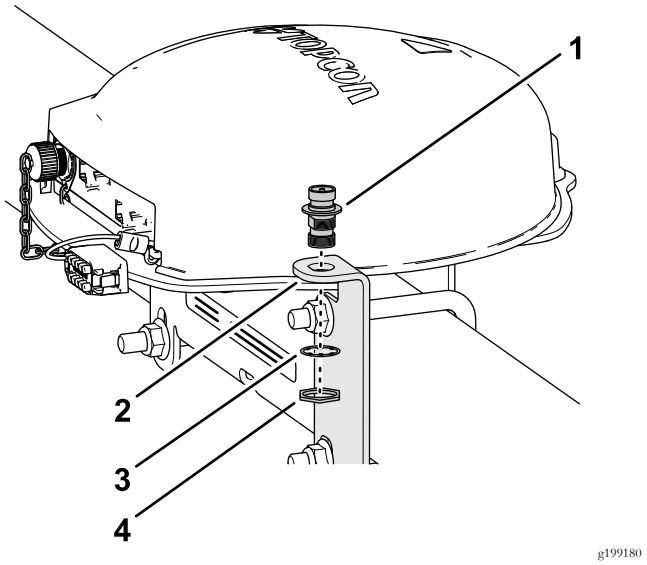

Figure 147

1. Coaxial coupler
2. RTK-antenna bracket
3. Lock washer
4. Jam nut

2. Assemble the coaxial coupler to the antenna bracket with the lock washer and jam nut, and tighten the jam nut by hand (Figure 147).
3. Assemble the RTK antenna onto the upper fitting of the coaxial coupler, and tighten the knurl nut of the antenna by hand (Figure 148).

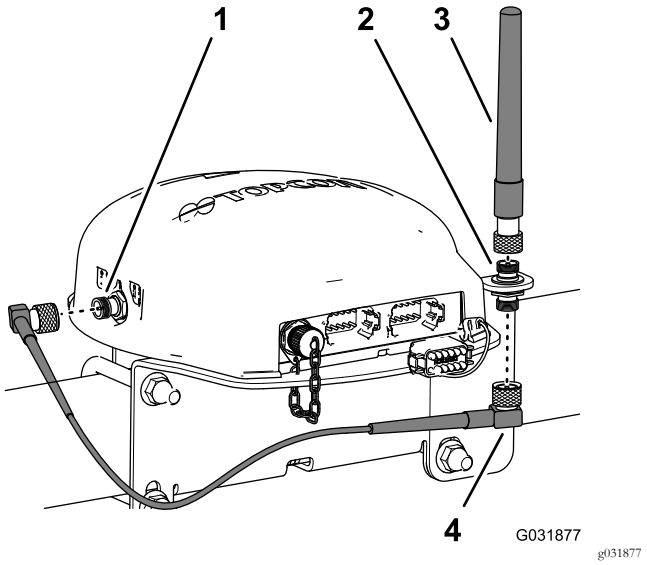

Figure 148

1. Coaxial connector (CDMA or GSM cellular modem)
2. Coaxial coupler
3. RTK-antenna
4. Antenna cable

4. Loosely assemble the antenna cable to the lower fitting of the coaxial coupler (Figure 148).
5. Route the cable around the back of the navigation receiver to the coaxial connector of the CDMA or GSM cellular modem (Figure 148).

6. Assemble the antenna cable to coaxial connector of the CDMA or GSM cellular modem (Figure 148).
7. Tighten the knurl nuts of the of the antenna cable by hand.

28

Installing the Sprayer Monitor

Parts needed for this procedure:

1	Sprayer Monitor—GeoLink precision spray system kit (Model 41623)
1	Display hood
1	Ball mount—GeoLink precision spray system kit (Model 41623)
1	Monitor arm—GeoLink precision spray system kit (Model 41623)
1	Reinforcement plate
4	Flange-head bolt (1/4 x 1-1/2 inches)
4	Flange locknut (1/4 inch)

Assembling the Display Hood to the Sprayer Monitor

1. At the back of the sprayer monitor and with the 2 connectors (26 pin) aligned down, remove the top locknut (5 mm) from the stud for the ball-pivot fitting (Figure 149).

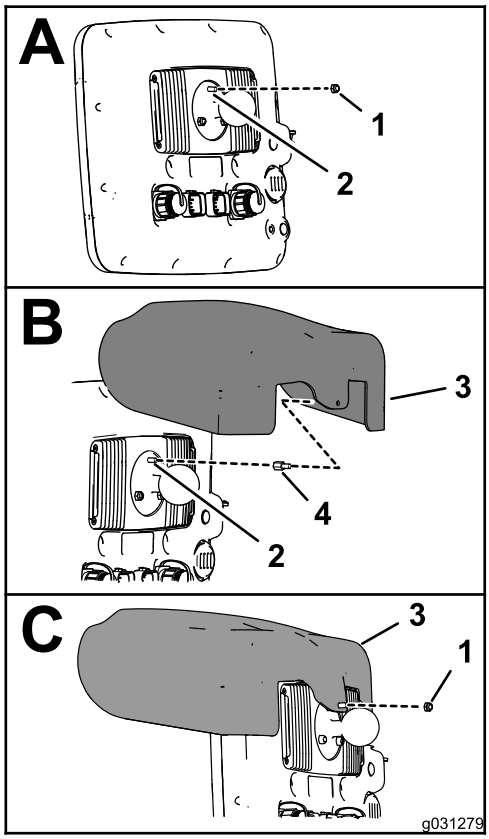

g031279

Figure 149

1. Locknut (5 mm)
2. 5 mm stud (sprayer monitor at the ball-pivot fitting)
3. Display hood
4. Threaded standoff

2. Apply a coat of thread-locking compound (wicking—medium-high strength) to the threads for the nut portion of the threaded standoff (Figure 150).

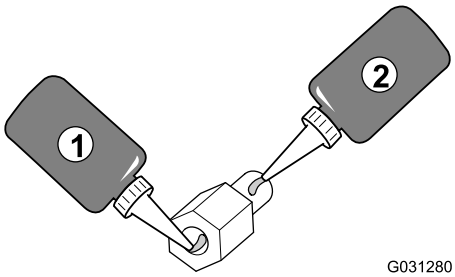

g031280

Figure 150

1. Thread-locking compound (wicking—meduim-high strength)—nut threads of the
2. Thread-locking compound (wicking—meduim-high strength)—stud threads

3. Thread the standoff into the stud for the ball-pivot fitting (Figure 149) and torque the standoff to 250 N·cm (22 in-lb).
4. Apply a coat of thread-locking compound (wicking—medium-high strength) to the threads for the stud portion of the threaded standoff (Figure 150).

5. Align the hole in the display hood with the stud portion of the threaded standoff (Figure 149).
6. Assemble the hood to the monitor (Figure 149) with the locknut (5 mm) that you removed in step 1.
7. Torque the nut to 250 N·cm (22 in-lb).

Drilling the Dash Panel

1. At the dash of the machine, locate the dash-panel screw to the right of the hole grommet in the dash (Figure 151).

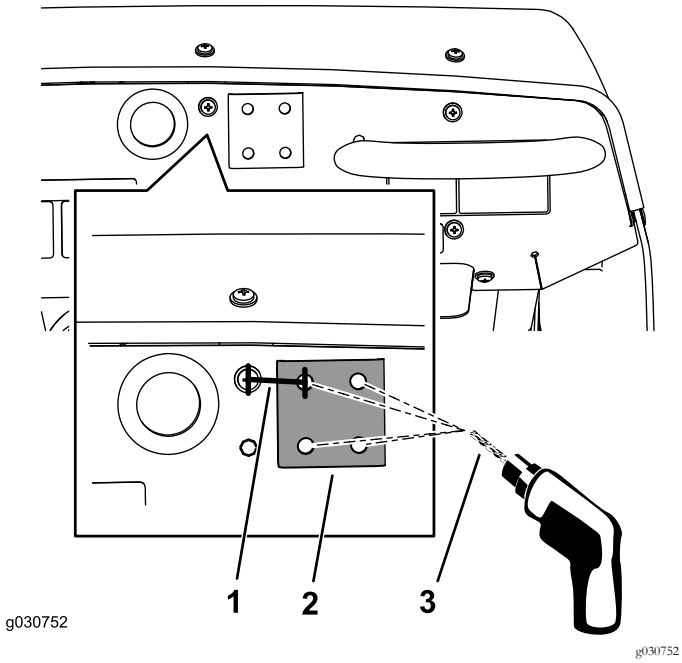

Figure 151

1. 33.3 mm (1-5/16 inches)
2. stiffener plate
3. 8 mm (5/16 inch) drill bit

2. Measure to the right of the center of the screw 33.3 mm (1-5/16 inches) and with a pencil, mark the location with a vertical line (Figure 151).
3. Measure from the top edge of the dash panel down 21 mm (13/16 inch) and mark the location with a horizontal line.
4. Center punch the dash panel at the intersection of the marks.
5. Drill the dash panel at the center punch mark with an 8 mm (5/16 inch) drill bit (Figure 151).
6. Temporarily align the flat side of the stiffener plate to the dash panel with a flange bolt (5/16 x 3/4 inch).
7. Align the stiffener plate horizontally to the top of the dash panel and using the stiffener as a template, drill the remaining 3 holes in the dash (Figure 151).
8. Remove the stiffener plate from the face of the dash panel.

Mounting the Sprayer Monitor to the Dash of the Machine

1. Assemble the ball-pivot mount to the dash with the 4 bolts (1/4 x 1-1/2 inches), stiffener plate, and flange locknut (1/4 inch) as shown in Figure 152.

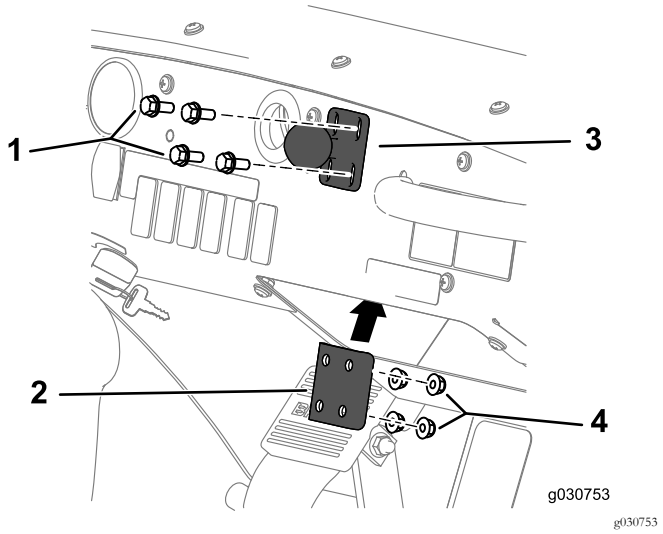

Figure 152

1. Bolt (1/4 x 1-1/2 inches)
2. Ball-pivot mount
3. Stiffener plate
4. Flange locknut (1/4 inch)

2. Torque the bolts and nuts to 1017 to 1243 N·cm (90 to 110 in-lb).
3. Loosen the knob of the monitor arm until you can slip both the ball pivot for the fitting at the back of the sprayer monitor and the ball pivot for the mount at the dash panel into the socket monitor arm (Figure 153).

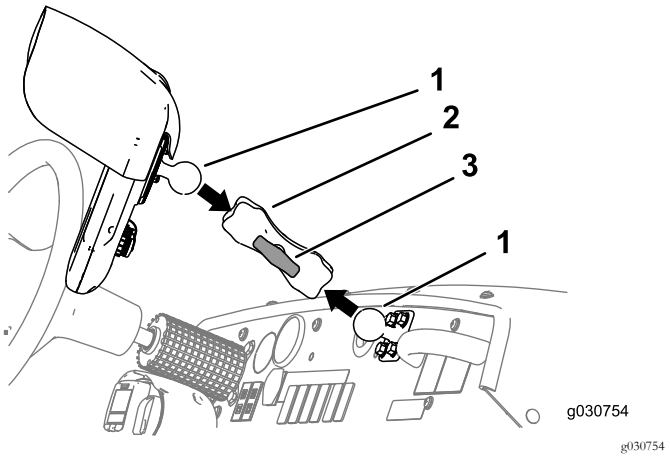

Figure 153

1. Ball pivot
2. Monitor arm
3. Knob

4. From the driver's seat (left seat), adjust to position of the sprayer monitor so that you can easily view the display screen (Figure 153).

5. Tighten the knob for the monitor arm by hand (Figure 153).

29

Installing the Wire Harnesses for the Navigation Components

Parts needed for this procedure:

1	Data Harness (navigation system)—GeoLink precision spray system kit (Model 41623)
1	Electrical Harness (navigation system)—GeoLink precision spray system kit (Model 41623)
5	Cable tie

Connecting the Navigation Data and Electrical Harnesses

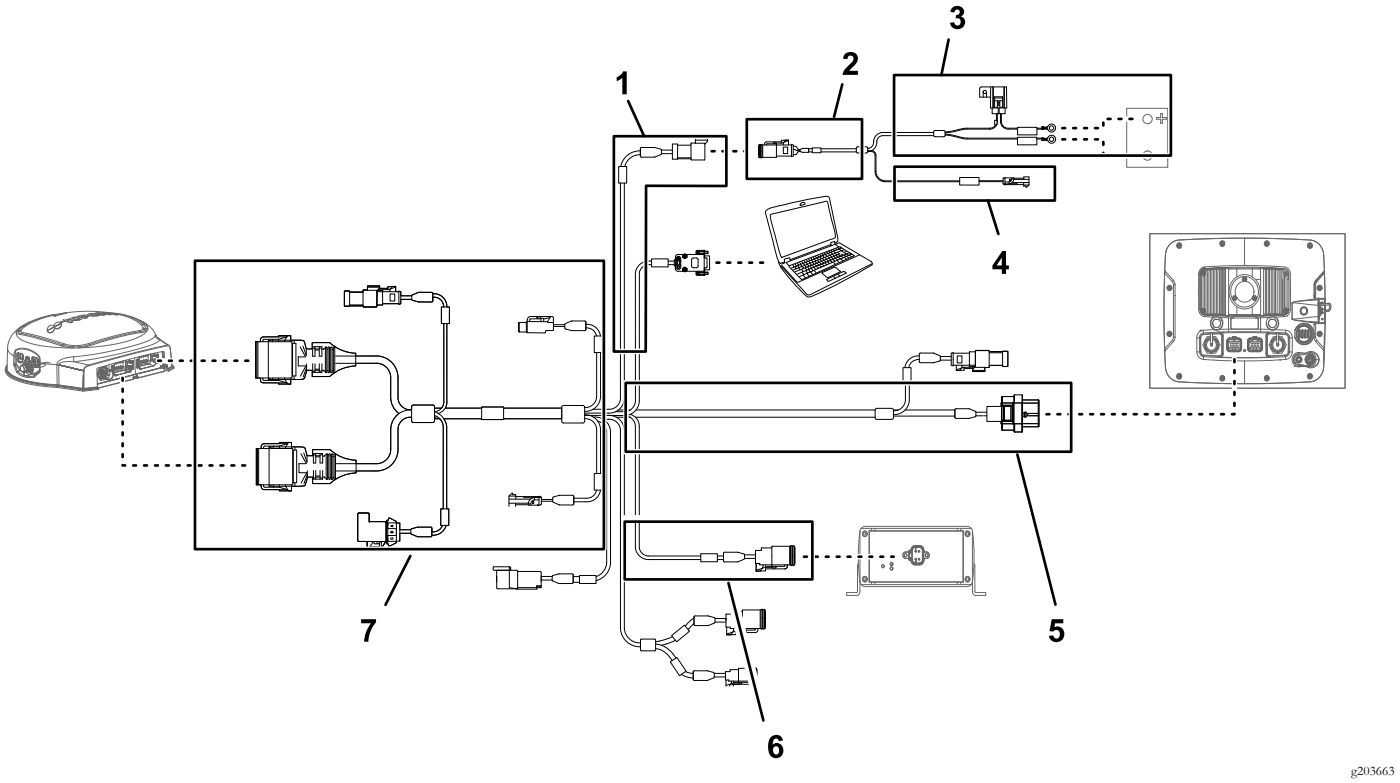

Figure 154

1. 100 cm (39-3/8 inch) data-harness branch (electrical power)
2. 100 cm (39-3/8 inch) battery-harness branch
3. 220 cm (86-5/8 inch) battery-harness branch
4. 100 cm (39-3/8 inch) battery-harness branch (switched power)
5. 390 cm (153-1/2 inch) data-harness branch (navigation receiver)
6. 13 cm (5-1/16 inch) data-harness branch (kit harness interface)
7. 220 cm (86-5/8 inch) data-harness branch (sprayer monitor)

Important: Some connectors of the data harness are not used. Ensure that the caps and plugs of the unused connectors are secure.

Connect the 3-socket connector (electrical-power interface) of the navigation-electrical harness to the 3-pin connector (electrical-power interface) of the data harness (Figure 154 and Figure 155).

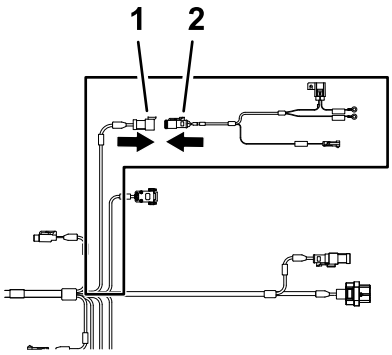

Figure 155

1. 3-pin connector—data harness (SYSTEM POWER SEPARATION)
2. 3-socket connector—battery harness (electrical–power interface)

Routing and Connecting the Data Cable to the Navigation Receiver

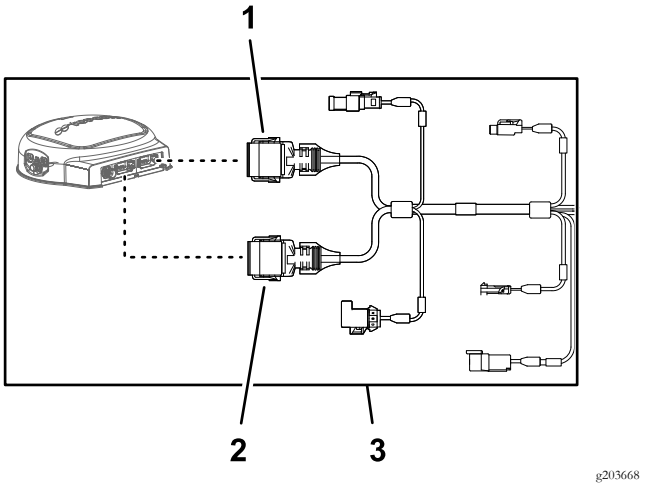

Figure 156

1. 12-socket connector (gray) data harness (navigation receiver)
2. 12-socket connector (black) data harness (navigation receiver)
3. 390 cm (153-1/2 inch) data-harness branch (navigation receiver)

1. Route the 390 cm (153-1/2 inches) branch of the data harness into the right side of the engine compartment (adjacent to the air filter for the engine) and rearward under the bottom right area of the rear engine shroud (Figure 157).

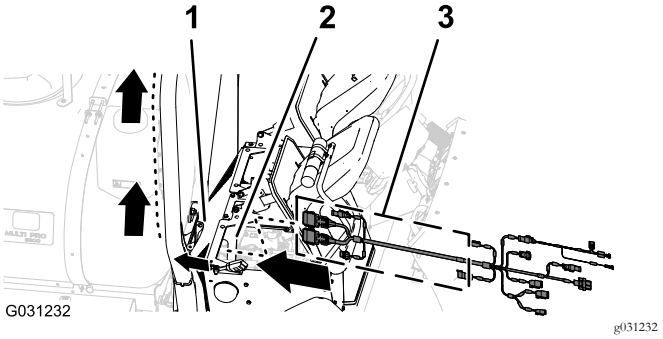

Figure 157

1. Rear engine shroud
2. Engine compartment
3. 390 cm (153-1/2 inches) branch (data harness)

2. Route the 390 cm (153-1/2 inches) branch of the data harness along the right ROPS tube with the 12-socket connector (gray) and 12-socket connector (black) up toward the navigation receiver (Figure 158).

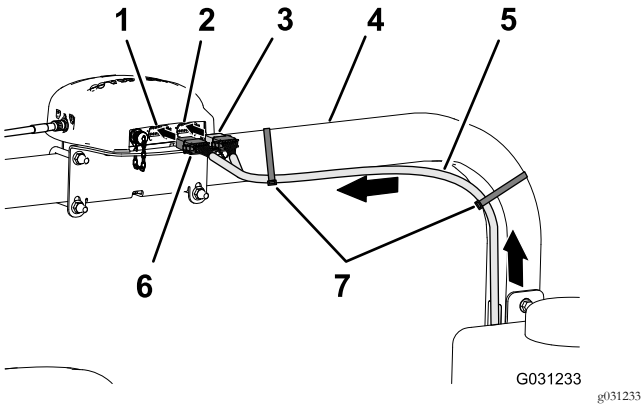

Figure 158

1. 12-pin connector left (gray)—navigation receiver
2. 12-pin connector right (black)—navigation receiver
3. 12-socket connector (black)—data harness
4. Right ROPS tube
5. 390 cm (153-1/2 inches) data-harness branch
6. 12-socket connector (gray/black)—data harness
7. Cable ties

3. Align the 2 keys at the long face of the gray and black 12-socket connector of the data harness with the 2 key slots in the bottom, horizontal wall of the left (gray) 12-pin connector of the navigation receiver (Figure 159).

   Note: Use caution when connecting wire harness to the navigation receiver; the alignment keys of the harness connectors are unique to the keyways of the pin connectors of the navigation receiver.

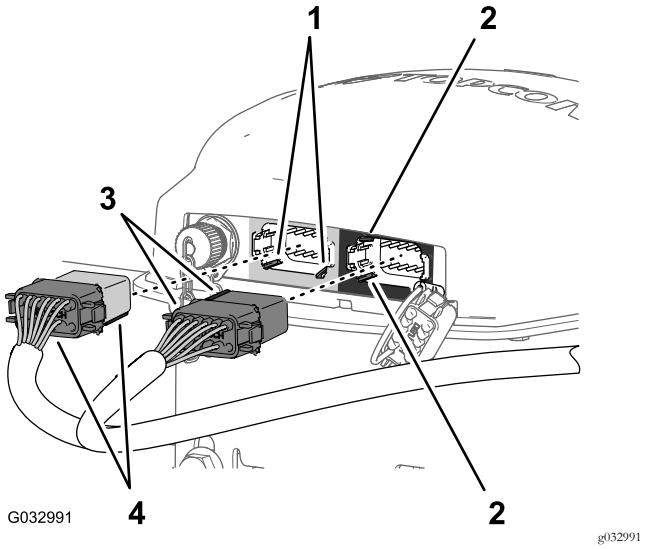

Figure 159

1. Key slots—bottom, horizontal wall (left (gray) 12-pin connector—navigation receiver)
2. Key slots—left, vertical wall (right (black) 12-pin connector—navigation receiver)
3. Alignment keys—short face (black) 12-socket connector—data harness
4. Alignment keys—long face (gray/black) 12-socket connector—data harness

4. Connect the gray and black 12-socket connector of the data harness into the left (gray) 12-pin connector of the navigation receiver until the connector locks snap together securely (Figure 159).
5. Align the 2 keys at the short side of the black 12-socket connector of the data harness with the 2 key slots in the left, vertical wall of the right (black) 12-pin connector of the navigation receiver (Figure 159).

   Note: Use caution when connecting wire harness to the navigation receiver; the alignment keys of the harness connectors are unique to the keyways of the pin connectors of the navigation receiver.

6. Connect the black only 12-socket connector of the data harness into the left (black) 12-pin connector of the navigation receiver until the connector locks snap together securely (Figure 159).
7. Secure the 390 cm (153-1/2 inches) branch of the data harness to the right ROPS tube with 2 cable ties as shown in Figure 158.

   Note: Ensure that the cable is slack between the 12-socket connectors and the cable tie.

Connecting the Navigation Electrical and Data Harnesses to the Rear Wire Harness of the Machine

1. Route the 100 cm (39-3/8 inches) branch of the electrical harness (Figure 160) with the 1-pin connector, down to the area where the front and rear wire harness for the machine connect; refer to Figure 120 in Connecting the Front and Rear Wire Harnesses (page 51).

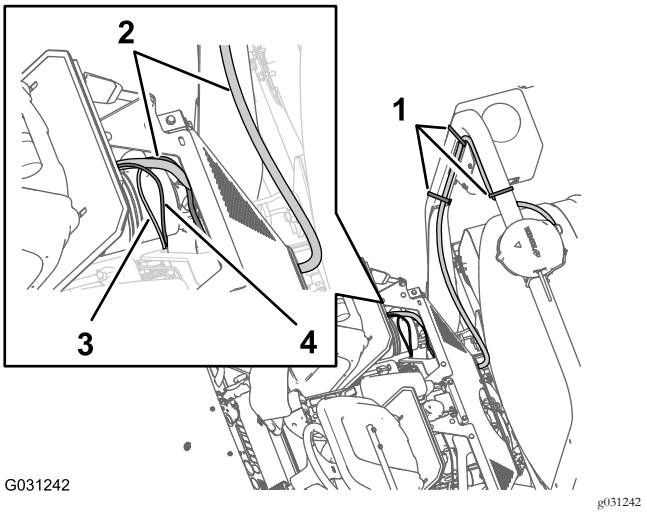

Figure 160

1. Cable ties
2. 390 cm (153-1/2 inches)—data harness branch
3. 100 cm (39-3/8 inches)—electrical harness branch
4. 100 cm (39-3/8 inches)—data harness branch

2. Route the 100 cm (39-3/8 inches) branch of the data harness (Figure 160) with the 4-pin connector for the CAN 2/sprayer controller, down to the area where the front and rear wire harness for the machine connect; refer to Figure 120 in Connecting the Front and Rear Wire Harnesses (page 51).
3. Connect the 4-pin connector of the data harness for the CAN 2/sprayer controller into the 4-socket connector of the rear harness for the CAN 2/sprayer-controller circuit (Figure 161).

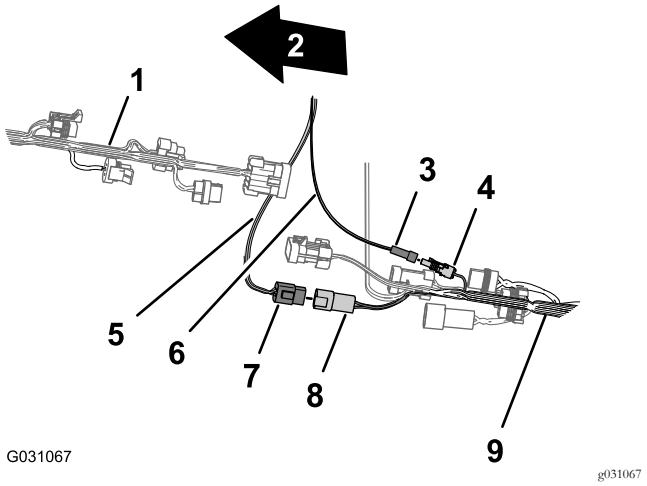

Figure 161

1. Front of the machine
2. Front wire harness of the machine
3. 1-pin connector—electrical harness branch (switched power)
4. 1-socket connector—rear wire harness (switched power)
5. Data harness (CAN 2/sprayer controller)
6. Electrical harness (switched power)
7. 4-pin connector—data harness (CAN 2/sprayer controller)
8. 4-socket connector—rear wire harness (CAN 2/sprayer controller)
9. Rear wire harness of the machine

4. Connect the 1-pin connector of the electrical-harness to the 1 socket connector of the rear wire harness (Figure 161).

Routing the Navigation Electrical Harness to the Battery

1. Route the 220 cm (86-5/8 inches) branch of the electrical harness for the navigation system across the seat-box angle and down along the left support for the engine shroud (Figure 162).

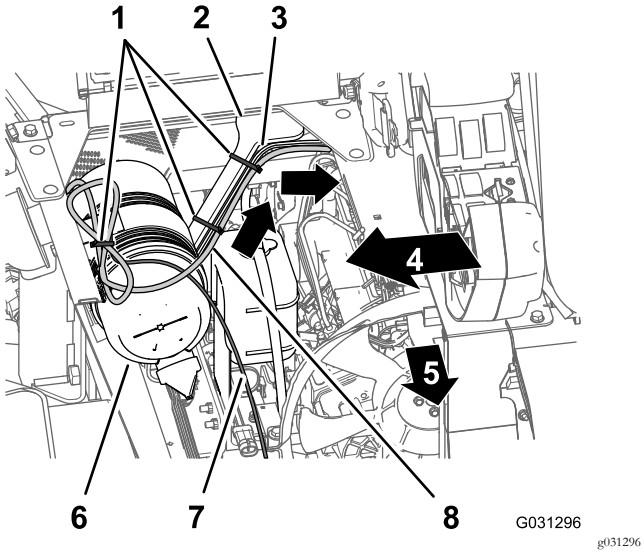

Figure 162

1. Cable ties
2. Engine-shroud support
3. 165 cm (65 inches) branch (rear wire harness)
4. Right side of the machine
5. Front of the machine
6. Air filter (engine)
7. 220 cm (86-5/8 inches) branch (data harness)
8. 220 cm (86-5/8 inches) branch (navigation electrical harness)

2. Secure the harness to the engine-shroud support with cable ties (Figure 162).
3. Route the 220 cm (86-5/8 inches) branch of the electrical harness for the navigation system down along the left support for the engine shroud and under the left frame tube (Figure 163).

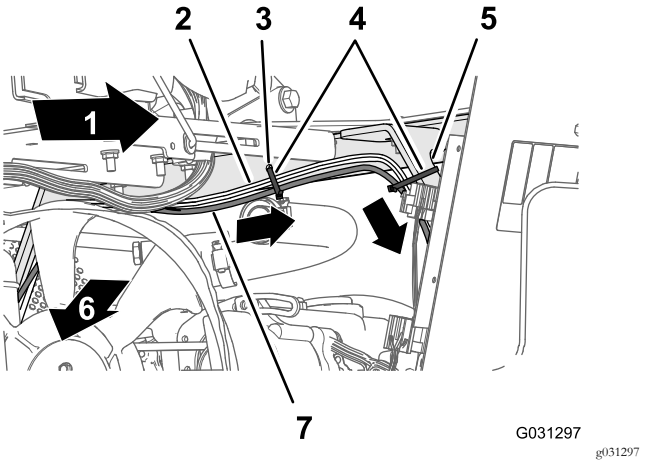

Figure 163

1. Left side of the machine
2. 165 cm (65 inches) branch (rear wire harness)
3. Hole in the seat-box angle)
4. Cable ties
5. Engine-shroud support
6. Front of the machine
7. 220 cm (86-5/8 inches) branch (navigation electrical harness)

4. Secure the harness to the hole in the seat-box angle and the engine-shroud support with 3 cable ties (Figure 163 and Figure 164).

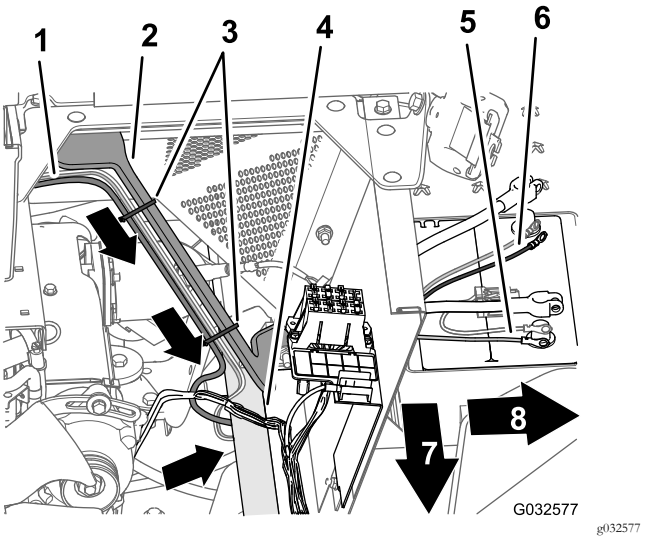

Figure 164

1. 165 cm (65 inches) branch (rear wire harness)
2. Engine-shroud support
3. Cable ties
4. Left frame tube
5. Negative ring terminal (black wire)—165 cm (65 inches) branch (rear wire harness)
6. Positive ring terminal (red wire)—165 cm (65 inches) branch (rear wire harness)
7. Front of the machine
8. Left side of the machine

5. Route the 10 A fuse and the positive and negative ring terminals of the 220 cm (86-5/8 inches) branch of the

electrical harness for the navigation system to the top of the battery (Figure 164).

Note: You will complete the installation of the ring terminals in Routing the Navigation Electrical Harness to the Battery (page 70).

Routing and Connecting the Data Cable to the Sprayer Monitor

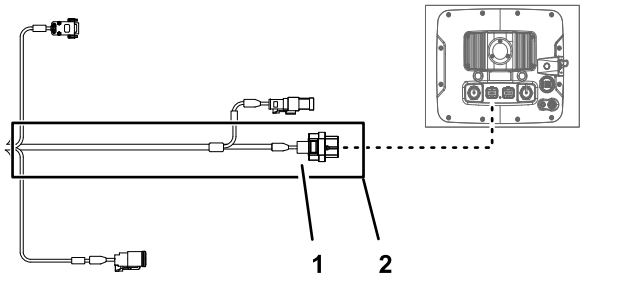

Figure 165

1. 26-socket connector—data harness (sprayer monitor)
2. 220 cm (86-5/8 inch) data-harness branch (sprayer monitor)

1. At the right side of the engine compartment, route the 220 cm (86-5/8 inches) branch of the data harness forward of the air filter for the engine and down toward the lower right corer of the radiator (Figure 166).

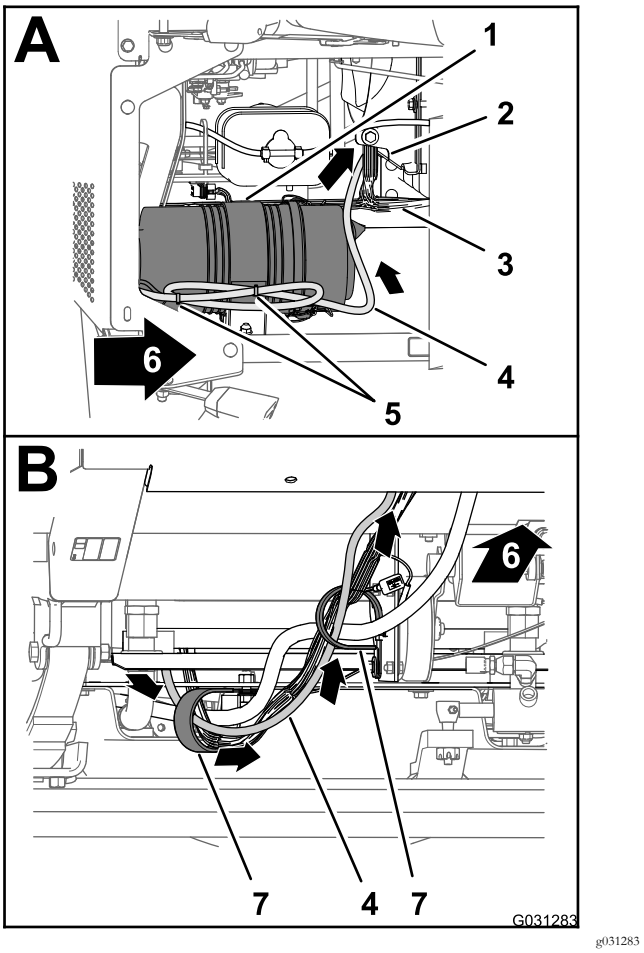

Figure 166

1. Air filter (engine)
2. Radiator
3. Front wire harness of the machine
4. 220 cm (86-5/8 inches) data harness branch
5. Cable ties
6. Font of the machine
7. R-clamps

2. Route the route the 220 cm (86-5/8 inches) branch of the data harness forward and through the 2 R-clamps at the bottom of the machine (Figure 166).
3. Route the route the 220 cm (86-5/8 inches) branch of the data harness forward and up through grommet that surrounds the hole in the floor panel (Figure 167).

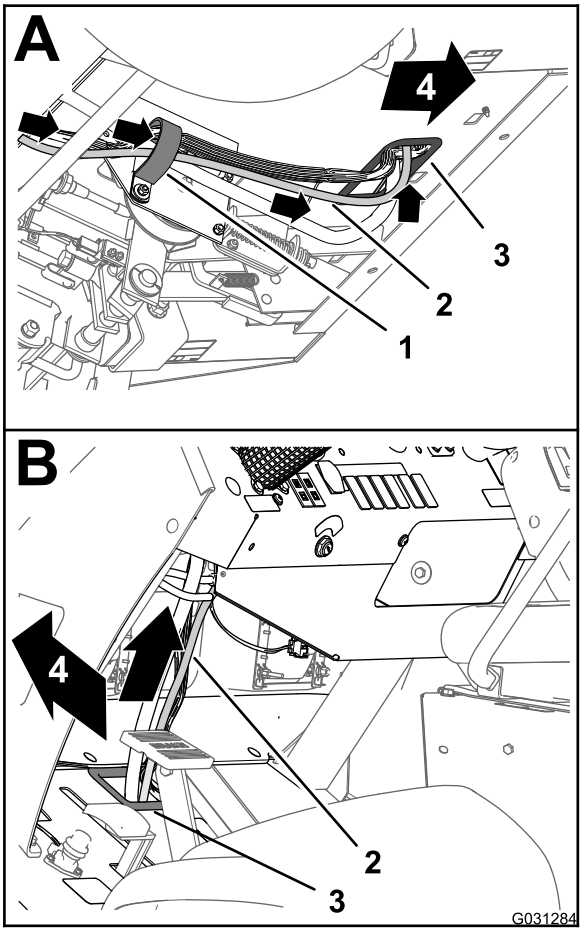

Figure 167

1. R-clamp
2. 220 cm (86-5/8 inches) data harness branch
3. Grommet (floor pan)
4. Front of the machine

4. Route the route the 220 cm (86-5/8 inches) branch of the data harness up and along the front wire harness of the machine (Figure 167).
5. Route the route the 220 cm (86-5/8 inches) branch of the data harness up through grommet that surrounds the hole in the dash panel (Figure 168).

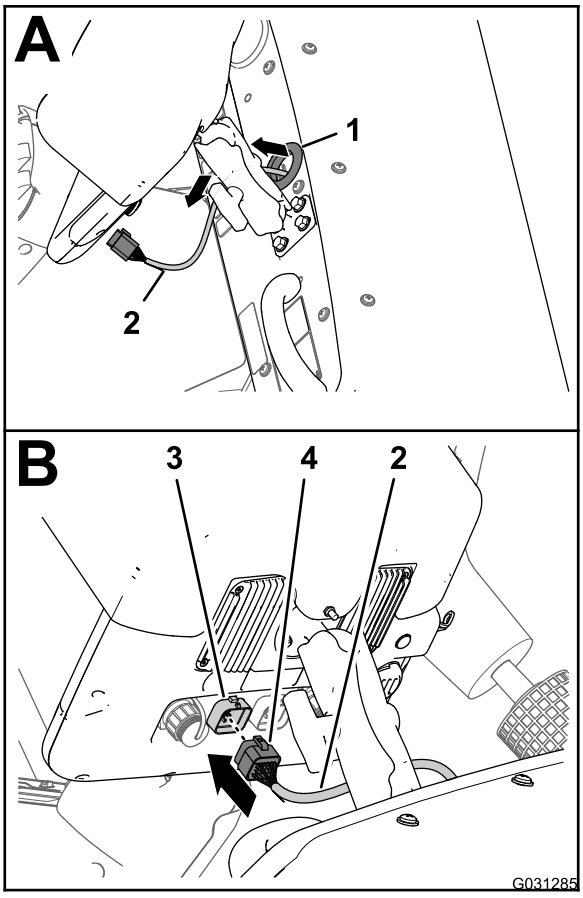

Figure 168

1. Grommet (dash panel)
2. 220 cm (86-5/8 inches) data harness branch
3. 26-pin connector (sprayer display)
4. 26-socket connector—data harness (sprayer monitor)

6. Align the 26-socket connector of the data harness with the 26-pin connector of the sprayer display and press the socket connector into the pin connector until the latch of the connector snaps securely (Figure 168).

Assembling the Rear Harness and Navigation Electrical Harness to the Battery Cables

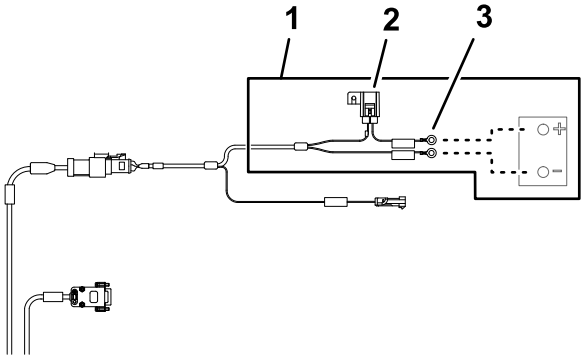

Figure 169

1. 220 cm (86-5/8 inch) battery-harness branch
2. 10 A fuse (battery)
3. Ring terminals (battery)

1. Route the positive terminal (red wire), negative terminal (black wire), and 50 A fuse block of the rear wire harness up between the battery box and the chassis of the machine (Figure 170).

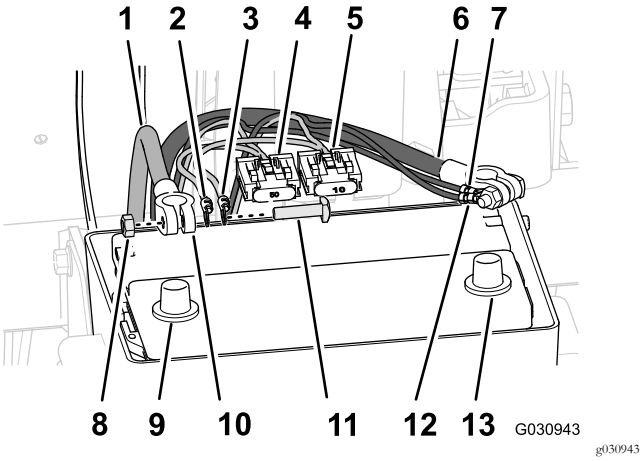

Figure 170

1. Positive battery cable
2. Positive-ring terminal (red wire)—165 cm (65 inches) branch (rear wire harness)
3. Positive-ring terminal (red wire)—220 cm (86-5/8 inches) branch (navigation electrical harness)
4. 50 A fuse block—rear wire harness
5. 10 A fuse block—navigation electrical harness
6. Negative battery cable
7. Hex nut
8. Battery post (positive)
9. Terminal (battery cable)
10. T-bolt
11. Negative ring terminal (black wire)—165 cm (65 inches) branch (rear wire harness)
12. Negative ring terminal (black wire)—220 cm (86-5/8 inches) branch (navigation electrical harness)
13. Battery post (negative)

2. Route the positive terminal (red wire), negative terminal (black wire), and 10 A fuse block of the navigation-electrical harness up between the battery box and the chassis of the machine.
3. Remove the T-bolts and hex nuts from the terminals of the positive and negative battery cables (Figure 170).
4. Assemble a T-bolt through the positive terminal (red wire) of the rear wire harness, the positive terminal of the navigation electrical harness, and terminal of the positive battery cable (Figure 170).
5. Loosely secure the terminals and the T-bolt with a hex nut (Figure 170).

   Note: Do not install the battery cable to the battery at this time.
6. Assemble a T-bolt through the negative terminal (black wire) of the rear wire harness, the negative terminal of the navigation electrical harness, and terminal of the negative battery cable (Figure 170).
7. Loosely secure the terminals and the T-bolt with a hex nut (Figure 170).

Note: Do not install the battery cables to the battery at this time.

30

Connecting the Wire Harness for the Optional Pivoting Hose Reel Kit

No Parts Required

Procedure

1. At the back of the machine, locate the wire harness for the electric hose reel kit at the back of the sprayer tank (Figure 171).

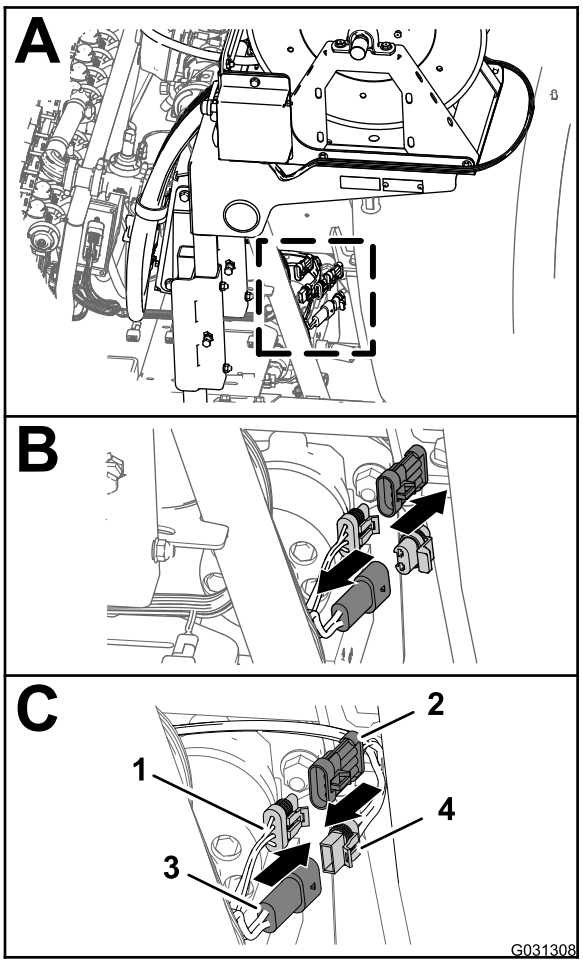

g031308

Figure 171

1. 3-socket connector (rear main harness)
2. 3-pin connector (harness—electric hose reel)
3. 2 socket pin (rear main harness)
4. 2 socket connector (harness—electric hose reel)

2. Remove the plug from the 2 pin connector of the rear main harness for the hose reel power (Figure 171).

3. Connect the 2 socket connector of the harness for the electric hose reel into the 2 pin connector of the rear main harness (Figure 171).
4. Remove the cap from the 3-socket connector of the rear main harness for the spray harness interconnect (Figure 171).
5. Connect the 3 pin connector of the harness for the electric hose reel into the 3 pin socket of the rear main harness (Figure 171).

31

Connecting the Optional Foam Marker Kit

Parts needed for this procedure:

4	Cable tie

Connecting the Compressor Wire Harness

1. At the end of the 236 cm (93 inches) branch of the wire harness, align the 4-socket connector of the wire harness for the finishing kit with the 4-pin connector of the wire harness from the compressor (Figure 172).

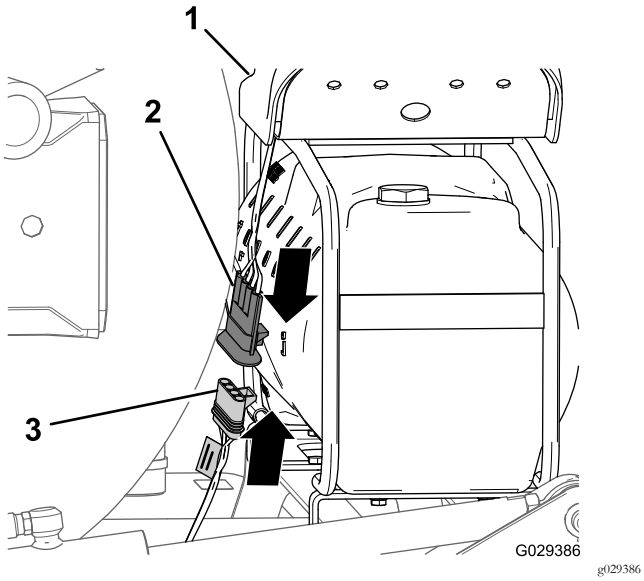

Figure 172

1. Compressor
2. 4-pin connector (wire harness for the compressor)
3. 4-socket connector (wire harness for the finishing kit)

2. Insert the 4-pin connector into the 4-socket connector (Figure 172).

Note: Press the connectors together until the latch snaps securely.

Connecting the Tubing for the Foam-Marker Nozzles

1. Route the tubes for the foam nozzles at the left and right boom section inboard and through the R-clamp near the pivot point for each outer boom section (Figure 173).

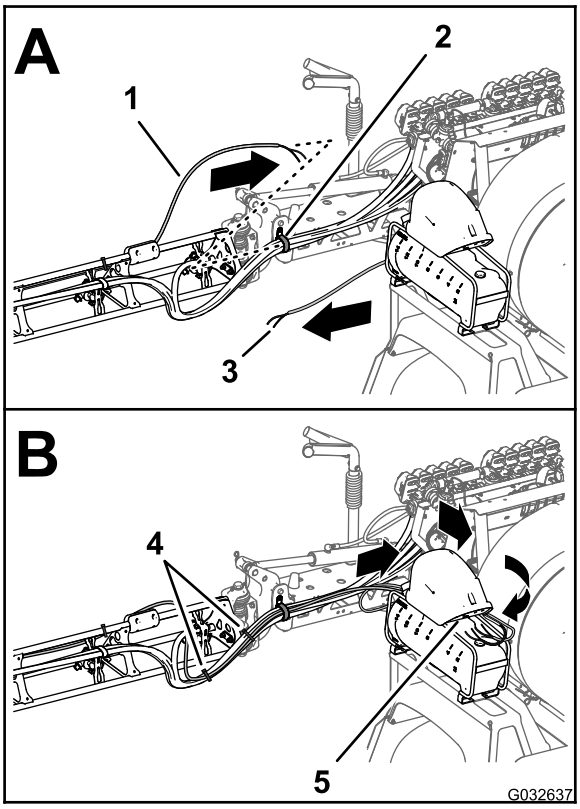

Figure 173

1. Tubing—foam-marker nozzle (right boom section)
2. R-clamp
3. Tubing—foam-marker nozzle (left boom section)
4. Cable ties
5. Connection panel (foam-marker compressor)

2. Route the tubes forward along the inboard side of the compressor for the tank (Figure 173).
3. Connect the tubing with the cable tie that you prepared in step 9 of Removing the Liquid and Air Tubes from the Machine (page 8) by aligning the blue tube for the right boom section onto the compression fitting for the right boom section water circuit (Figure 174).

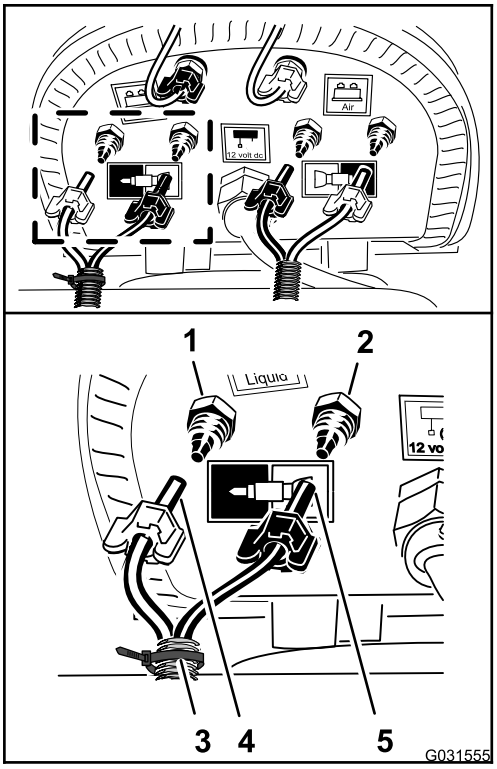

g031555

Figure 174

1. Compression fitting—water (right boom section—blue tube)
2. Compression fitting—air (right boom section—clear tube)
3. Cable tie
4. Compression nut—air (right boom section—blue tube)
5. Compression nut—water (right boom section—clear tube)

4. Assemble the compression nut for the tube onto the fitting and tighten the nut by hand (Figure 174).
5. Aligning the clear tube for the right boom section onto the compression fitting for the right boom section air circuit (Figure 174).
6. Assemble the compression nut for the tube onto the fitting and tighten the nut by hand (Figure 174).
7. Connect the unmarked (no cable tie) tubing by aligning the blue tube for the left boom section onto the compression fitting for the left boom section water circuit (Figure 175).

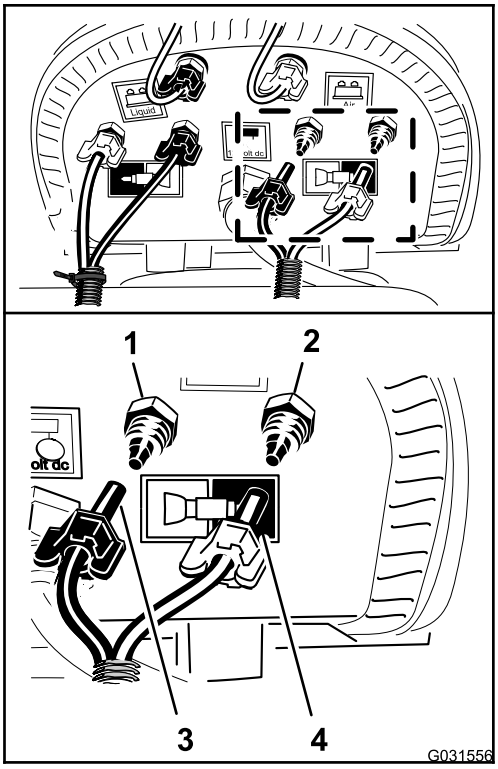

g031556

Figure 175

1. Compression fitting—water (left boom section—blue tube)
2. Compression fitting—air (left boom section—clear tube)
3. Compression nut (left boom section—blue tube)
4. Compression nut (left boom section—clear tube)

8. Assemble the compression nut for the tube onto the fitting and tighten the nut by hand (Figure 175).
9. Aligning the clear tube for the left boom section onto the compression fitting for the left boom section air circuit (Figure 175).
10. Assemble the compression nut for the tube onto the fitting and tighten the nut by hand (Figure 175).
11. Secure the foam marker tubing to the sprayer nozzle hoses with 2 cable ties (Figure 173).

32

Connecting the Optional Ultra Sonic Boom Kit

No Parts Required

Connecting the Wire Harness at the Lift-Cylinder Manifold

1. Connect the 2-pin connector of the sonic boom wire harness to the 2-pin connector of the right cylinder-enable solenoid of the lift-cylinder manifold (Figure 176).

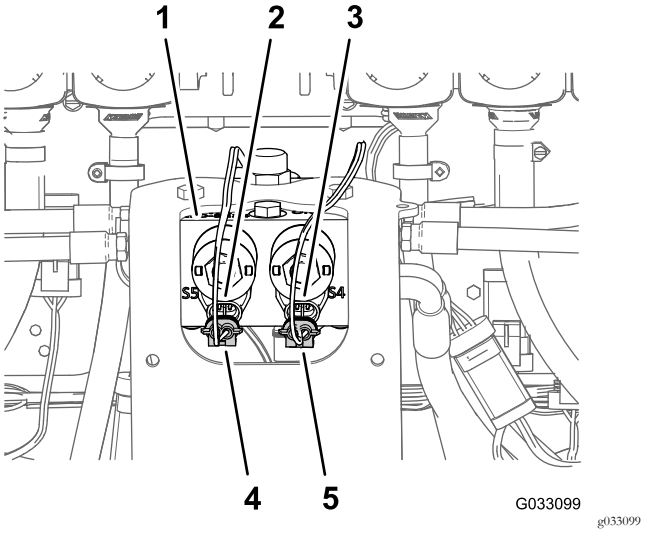

Figure 176

1. Lift-cylinder manifold
2. 2-pin connector (lift-cylinder manifold—left cylinder enable)
3. 2-pin connector (lift-cylinder manifold—right cylinder enable)
4. 2-socket connector (sonic boom wire harness—left cylinder enable)
5. 2-socket connector (sonic boom wire harness—right cylinder enable)

2. Connect the 2-pin connector of the sonic boom wire harness to the 2-pin connector of the left cylinder-enable solenoid of the lift-cylinder manifold (Figure 176).
3. Disconnect the 2-socket connectors of the wire harness for the sonic boom finishing kit (Figure 177) from the 2-pin connectors of the solenoids of the lift-cylinder manifold as follows:
   - Left boom section up
   - Right boom section up
   - Left boom section down
   - Right boom section down

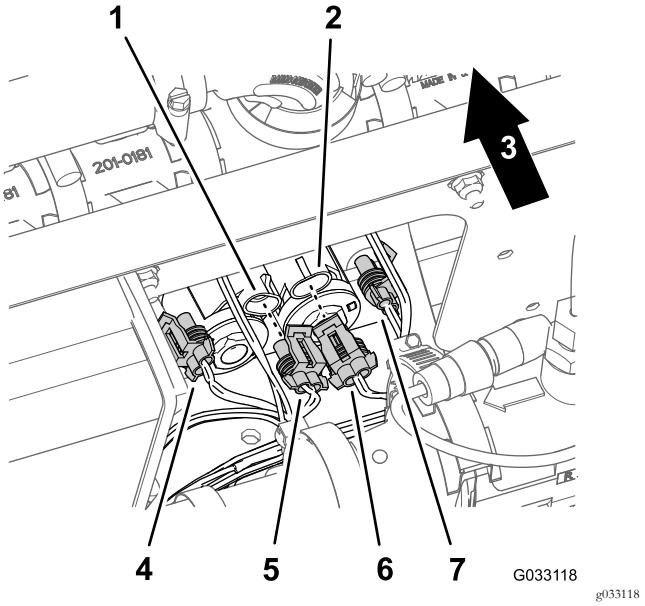

Figure 177

1. 2-pin connector (lift-cylinder manifold—left boom section up)
2. 2-pin connector (lift-cylinder manifold—right boom section up)
3. Back of the machine
4. 2-socket connector (wire harness for the sonic boom finishing kit—left boom section down)
5. 2-socket connector (wire harness for the sonic boom finishing kit—left boom section up)
6. 2-socket connector (wire harness for the sonic boom finishing kit—right boom section up)
7. 2-socket connector (wire harness for the sonic boom finishing kit—right boom section down)

Connecting the Ultra-Sonic Sensor Cable from the Wire Harness

1. Connect the 3-socket connector of the sonic boom wire harness to the 3-pin connector of the cable for the right ultra-sonic sensor (Figure 178).

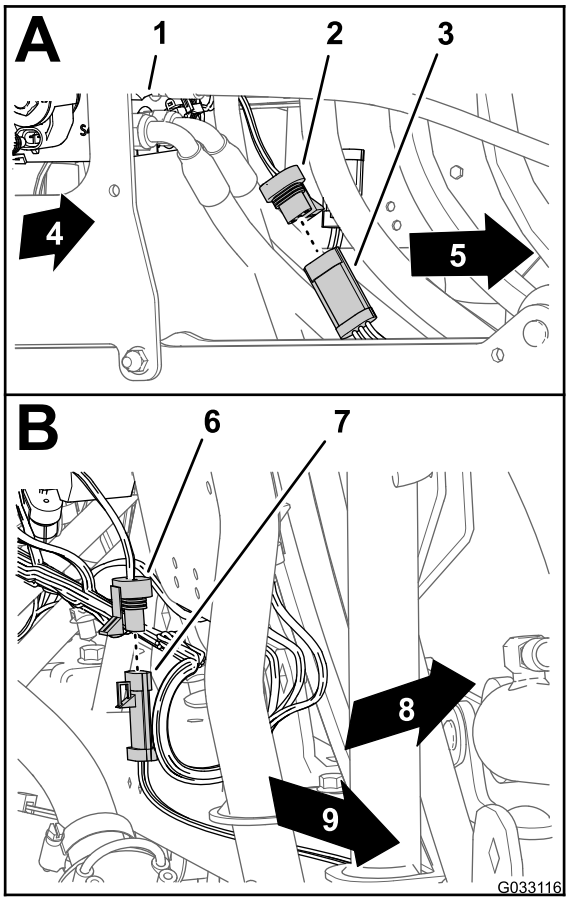

g033116

Figure 178

1. Lift-cylinder manifold
2. 3-socket connector (sonic boom wire harness—right sensor)
3. 3-pin connector (cable—right ultra-sonic sensor)
4. Right side of the machine
5. 3-socket connector (sonic boom wire harness—left sensor)
6. 3-pin connector (cable—left ultra-sonic sensor)
7. Left side of the machine
8. Back of the machine
9. Left side of the machine

2. Connect the 3-socket connector of the sonic boom wire harness from the 3-pin connector of the cable for the left ultra-sonic sensor (Figure 178).

33

Assembling the Optional Covered Boom Kit

Parts needed for this procedure:

1	Cover extension assembly (12-nozzle—Toro Part No. 120-0621)
22	Pop rivet (Toro Part No. 114439)
4	Support bracket (center section cover—Toro Part No. 131-3703-03)
4	Clip nut (Toro Part No. 94-2413)
16	Flange-head bolt (3/8 x 1-1/4 inches—Toro Part No. 110-5050)
16	Flange locknut (3/8 inch—Toro Part No. 104-8301)
2	Cover strap (Toro Part No. 120-0629)
4	Flange-head bolt (5/16 x 1-1/4 inches—Toro Part No. 323-36)

Installing the Cover Extension on to Center Section Cover (11 Nozzle)

1. Using a drill with an 5 mm (3/16 inch) drill bit, drill the 11 pop rivets (Figure 179) that secure the reinforcement plate (single row) and rubber cover to the end of the 11-nozzle section cover for the center boom section that you removed in step 2 of 6 Removing the Center Section Cover (11-nozzle) of the Optional Covered-Boom Kit (page 13).

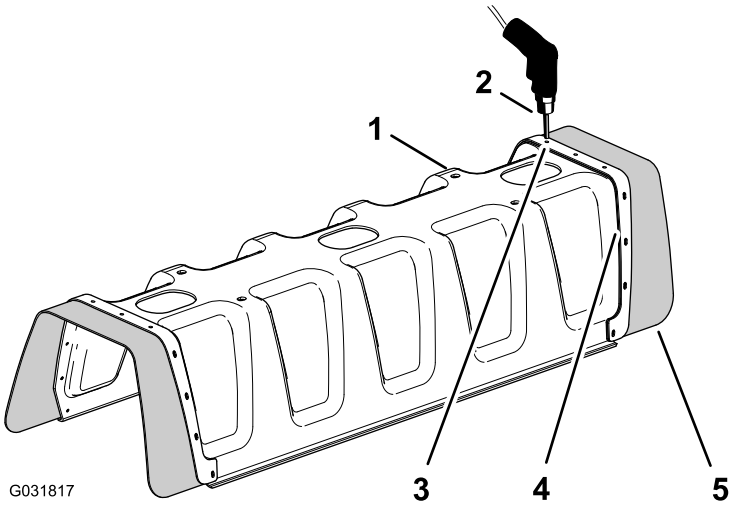

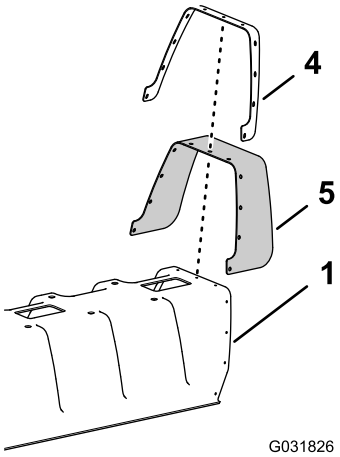

Figure 179

1. 11-nozzle section cover
2. Drill and 5 mm (3/16) drill bit
3. Rivet (3/16 x 1/2 inch)
4. Reinforcement plate (single row)
5. Rubber cover

2. Remove the reinforcement plate, 11 washers (3/16 inch), and rubber cover from the 11-nozzle boom cover (Figure 179).

   Note: Retain the reinforcement plate, washers, and rubber cover for installation in steps 5 and 6.

3. Align the holes in the reinforcement plate (double row)on the cover extension with the holes in the end of the 11-nozzle boom cover (Figure 180).

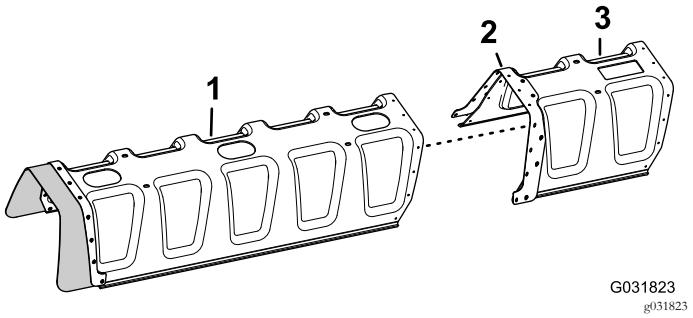

Figure 180

1. 11-nozzle section cover
2. Reinforcement plate (double row)
3. Cover extension

4. Secure the cover extension to the 11-nozzle section cover (Figure 181) with 11 pop rivets (Toro Part No. 114439).

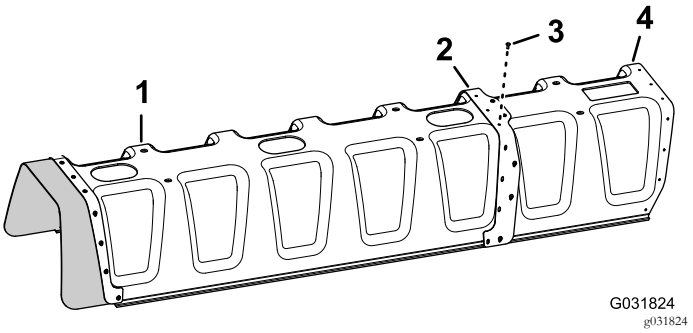

Figure 181

1. 11-nozzle section cover
2. Reinforcement plate (double row)
3. Pop rivets (Toro Part No. 114439)
4. Cover extension

5. Align the holes in the rubber cover and the reinforcement plate (single row) that you removed in step 2 with the holes in the end of the over extension (Figure 182).

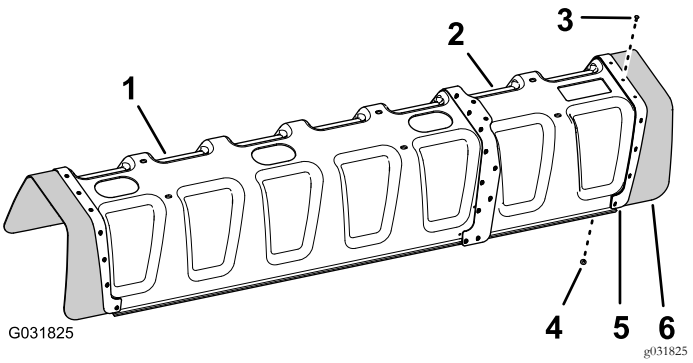

Figure 182

1. 11-nozzle section cover
2. Cover extension
3. Pop rivet (Toro Part No. 114439)
4. Washer (3/16 inch)
5. Reinforcement plate (single row)
6. Rubber cover

6. Secure the reinforcement plate and rubber cover to the cover extension with the 11 pop rivets (Toro Part No. 114439) and the 11 washers (3/16 inch) that you removed in step 5.

   Note: Align the washers (3/16 inch) against the inside surface of the cover extension.

Installing the Support Bracket for the Center Section Cover

1. Install the 4 clip nuts (Toro Part No. 94-2413) onto the 2 support bracket of the center section cover (Toro Part No. 131-3703-03) as shown in (Figure 183).

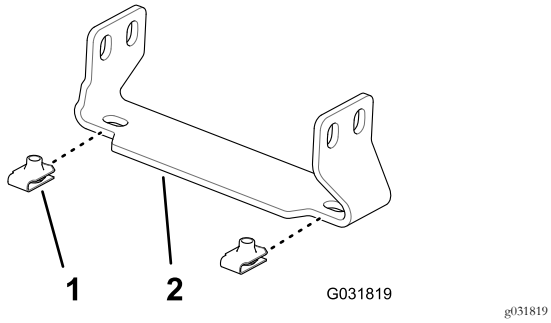

Figure 183

1. Clip nut (Toro Part No. 94-2413)
2. Support bracket (center section cover—Toro Part No. 131-3703-03)

2. At the extension for the center boom section, locate the 2 pairs holes in the vertical face of the truss frame with a 25 mm (1 inch) hole spacing (Figure 184).

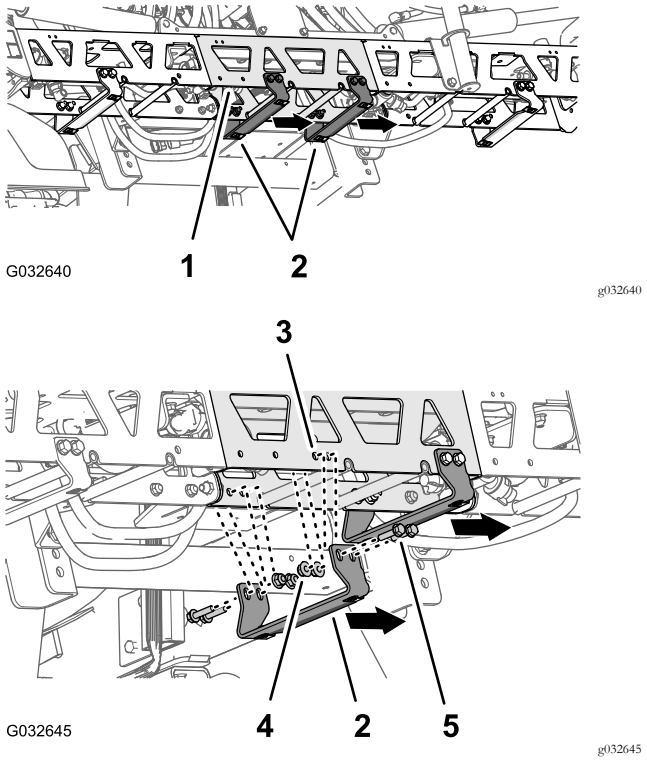

Figure 184

1. Extension (center boom section)
2. Support bracket—Toro Part No. 131-3703-03 (wide flange to the right)
3. Truss frame hole (extension for the center boom section)
4. Flange locknuts (3/8 inch—Toro Part No. 104-8301)
5. Flange-head bolts (3/8 x 1-1/4 inches—Toro Part No. 110-5050)

3. Align the holes in a support bracket (Toro Part No. 131-3703-03) to the holes in the extension for the center boom section that you identified in step 2 with the wide flange of the bracket to the left; refer to Figure 184.
4. Assemble the support bracket to the truss frame (Figure 184) with 4 flange-head bolts (3/8 x 1-1/4 inches—Toro Part No. 110-5050) and 4 flange locknuts (3/8 inch—Toro Part No. 104-8301).
5. Repeat steps 2 through 4 at the other 2 pairs of holes in the extension for the center boom section and the other support bracket, flange-head bolts, and flange locknuts.
6. Torque the nuts and bolts to 37 to 45 N·m (27 to 33 ft-lb).

Installing the Center Section Cover

1. Align the holes in the center section cover with the holes in the support brackets for the center section cover (Figure 185).

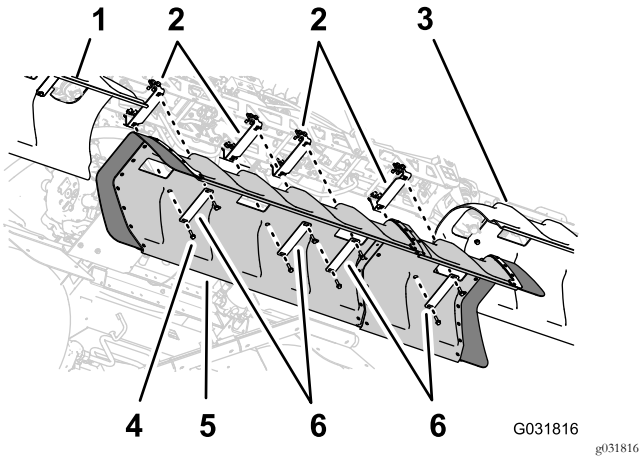

Figure 185

1. Left boom cover
2. Support brackets
3. Right boom cover
4. Flange-head bolts (5/16 x 1-1/4 inches)
5. Center boom cover
6. Cover straps

2. Align the holes in 2 of the cover straps that you removed in step 1 of6 Removing the Center Section Cover (11-nozzle) of the Optional Covered-Boom Kit (page 13) with the hose in the cover and 2 of the support brackets (Figure 185).
3. Assemble the cover straps and cover to the support brackets with the 4 flange-head bolts (5/16 x 1-1/4 inches) that you removed in step 1 of 6 Removing the Center Section Cover (11-nozzle) of the Optional Covered-Boom Kit (page 13).
4. Align the holes in the 2 cover straps (Toro Part No. 120-0629) with the 4 remaining hole in the cover and 4 remaining holes in the support brackets (Figure 185).
5. Assemble the cover straps and cover to the support brackets (Figure 185) with the 4 flange-head bolts (5/16 x 1-1/4 inches—Toro Part No. 323-36).
6. Torque the bolts to 1978 to 2542 N·cm (175 to 225 in-lb).

34

Connecting the Optional Tank Rinse Kit

No Parts Required

Procedure

1. Connect the 6-pin connector of the rinse-pump harness from the 6-socket connector of the rear main harness (Figure 186).

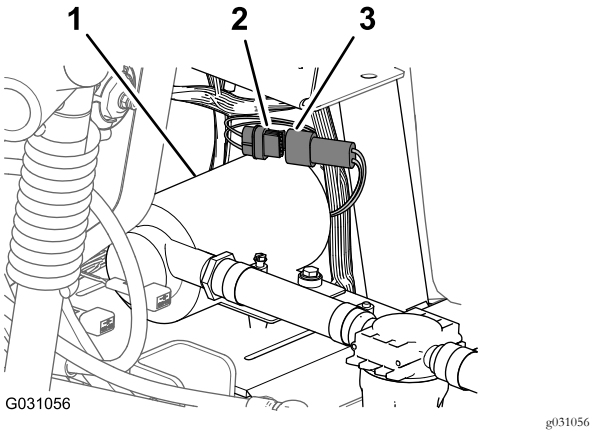

Figure 186

1. Rinse pump
2. 6-socket connector (rear main harness)
3. 6-pin connector (rinse-pump harness)

2. Align the rinse-pump cover over saddle plate for the rinse pump (Figure 187).

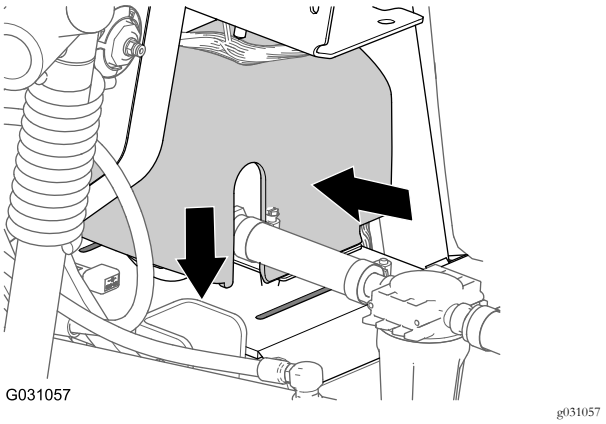

Figure 187

3. Press together the sides of the rinse-pump cover and align the tabs of the cover with the saddle plate (Figure 187).

4. Insert the tabs into the slots and release the sides of the cover (Figure 187).

35

Completing the Installation of the GeoLink Spray System Finishing Kit

No Parts Required

Procedure

1. Move the prop rod for the seats into the slots and tilt the seats down.
2. Connect the positive (red) cable to the positive (+) battery post and the negative (black) cable to the negative (–) battery post using the bolts and nuts; refer to Figure 2 in Disconnecting the Battery (page 5).
3. Slide the insulator boot over both battery posts; refer to Figure 2 in Disconnecting the Battery (page 5).
4. Install the battery cover and secure it with the strap; refer to Figure 1 in Disconnecting the Battery (page 5).

European Privacy Notice

The Information Toro Collects
Toro Warranty Company (Toro) respects your privacy. In order to process your warranty claim and contact you in the event of a product recall, we ask you to share certain personal information with us, either directly or through your local Toro company or dealer.

The Toro warranty system is hosted on servers located within the United States where privacy law may not provide the same protection as applies in your country.

BY SHARING YOUR PERSONAL INFORMATION WITH US, YOU ARE CONSENTING TO THE PROCESSING OF YOUR PERSONAL INFORMATION AS DESCRIBED IN THIS PRIVACY NOTICE.

The Way Toro Uses Information
Toro may use your personal information to process warranty claims, to contact you in the event of a product recall and for any other purpose which we tell you about. Toro may share your information with Toro's affiliates, dealers or other business partners in connection with any of these activities. We will not sell your personal information to any other company. We reserve the right to disclose personal information in order to comply with applicable laws and with requests by the appropriate authorities, to operate our systems properly or for our own protection or that of other users.

Retention of your Personal Information
We will keep your personal information as long as we need it for the purposes for which it was originally collected or for other legitimate purposes (such as regulatory compliance), or as required by applicable law.

Toro's Commitment to Security of Your Personal Information
We take reasonable precautions in order to protect the security of your personal information. We also take steps to maintain the accuracy and current status of personal information.

Access and Correction of your Personal Information
If you would like to review or correct your personal information, please contact us by email at legal@toro.com.

Australian Consumer Law

Australian customers will find details relating to the Australian Consumer Law either inside the box or at your local Toro Dealer.

The Toro Warranty

A Two-Year Limited Warranty

Conditions and Products Covered

The Toro Company and its affiliate, Toro Warranty Company, pursuant to an agreement between them, jointly warrant your Toro Commercial product ("Product") to be free from defects in materials or workmanship for two years or 1500 operational hours*, whichever occurs first. This warranty is applicable to all products with the exception of Aerators (refer to separate warranty statements for these products). Where a warrantable condition exists, we will repair the Product at no cost to you including diagnostics, labor, parts, and transportation. This warranty begins on the date the Product is delivered to the original retail purchaser.
* Product equipped with an hour meter.

Instructions for Obtaining Warranty Service

You are responsible for notifying the Commercial Products Distributor or Authorized Commercial Products Dealer from whom you purchased the Product as soon as you believe a warrantable condition exists. If you need help locating a Commercial Products Distributor or Authorized Dealer, or if you have questions regarding your warranty rights or responsibilities, you may contact us at:

Toro Commercial Products Service Department
Toro Warranty Company
8111 Lyndale Avenue South
Bloomington, MN 55420-1196

952–888–8801 or 800–952–2740
E-mail: commercial.warranty@toro.com

Owner Responsibilities

As the Product owner, you are responsible for required maintenance and adjustments stated in your *Operator's Manual*. Failure to perform required maintenance and adjustments can be grounds for disallowing a warranty claim.

Items and Conditions Not Covered

Not all product failures or malfunctions that occur during the warranty period are defects in materials or workmanship. This warranty does not cover the following:

- Product failures which result from the use of non-Toro replacement parts, or from installation and use of add-on, or modified non-Toro branded accessories and products. A separate warranty may be provided by the manufacturer of these items.
- Product failures which result from failure to perform recommended maintenance and/or adjustments. Failure to properly maintain your Toro product per the Recommended Maintenance listed in the *Operator's Manual* can result in claims for warranty being denied.
- Product failures which result from operating the Product in an abusive, negligent, or reckless manner.
- Parts subject to consumption through use unless found to be defective. Examples of parts which are consumed, or used up, during normal Product operation include, but are not limited to, brake pads and linings, clutch linings, blades, reels, rollers and bearings (sealed or greasable), bed knives, spark plugs, castor wheels and bearings, tires, filters, belts, and certain sprayer components such as diaphragms, nozzles, and check valves, etc.
- Failures caused by outside influence. Conditions considered to be outside influence include, but are not limited to, weather, storage practices, contamination, use of unapproved fuels, coolants, lubricants, additives, fertilizers, water, or chemicals, etc.
- Failure or performance issues due to the use of fuels (e.g. gasoline, diesel, or biodiesel) that do not conform to their respective industry standards.
- Normal noise, vibration, wear and tear, and deterioration.
- Normal "wear and tear" includes, but is not limited to, damage to seats due to wear or abrasion, worn painted surfaces, scratched decals or windows, etc.

Parts

Parts scheduled for replacement as required maintenance are warranted for the period of time up to the scheduled replacement time for that part. Parts replaced under this warranty are covered for the duration of the original product warranty and become the property of Toro. Toro will make the final decision whether to repair any existing part or assembly or replace it. Toro may use remanufactured parts for warranty repairs.

Deep Cycle and Lithium-Ion Battery Warranty:

Deep cycle and Lithium-Ion batteries have a specified total number of kilowatt-hours they can deliver during their lifetime. Operating, recharging, and maintenance techniques can extend or reduce total battery life. As the batteries in this product are consumed, the amount of useful work between charging intervals will slowly decrease until the battery is completely worn out. Replacement of worn out batteries, due to normal consumption, is the responsibility of the product owner. Battery replacement may be required during the normal product warranty period at owner's expense. Note: (Lithium-Ion battery only): A Lithium-Ion battery has a part only prorated warranty beginning year 3 through year 5 based on the time in service and kilowatt hours used. Refer to the *Operator's Manual* for additional information.

Maintenance is at Owner's Expense

Engine tune-up, lubrication, cleaning and polishing, replacement of filters, coolant, and completing recommended maintenance are some of the normal services Toro products require that are at the owner's expense.

General Conditions

Repair by an Authorized Toro Distributor or Dealer is your sole remedy under this warranty.

Neither The Toro Company nor Toro Warranty Company is liable for indirect, incidental or consequential damages in connection with the use of the Toro Products covered by this warranty, including any cost or expense of providing substitute equipment or service during reasonable periods of malfunction or non-use pending completion of repairs under this warranty. Except for the Emissions warranty referenced below, if applicable, there is no other express warranty. All implied warranties of merchantability and fitness for use are limited to the duration of this express warranty.

Some states do not allow exclusions of incidental or consequential damages, or limitations on how long an implied warranty lasts, so the above exclusions and limitations may not apply to you. This warranty gives you specific legal rights, and you may also have other rights which vary from state to state.

Note regarding engine warranty:

The Emissions Control System on your Product may be covered by a separate warranty meeting requirements established by the U.S. Environmental Protection Agency (EPA) and/or the California Air Resources Board (CARB). The hour limitations set forth above do not apply to the Emissions Control System Warranty. Refer to the Engine Emission Control Warranty Statement supplied with your product or contained in the engine manufacturer's documentation for details

Countries Other than the United States or Canada

Customers who have purchased Toro products exported from the United States or Canada should contact their Toro Distributor (Dealer) to obtain guarantee policies for your country, province, or state. If for any reason you are dissatisfied with your Distributor's service or have difficulty obtaining guarantee information, contact the Toro importer.

374-0253 Rev D