Form No. 3414-601 Rev A

TORO®

Count on it.

Parts Catalog

Z Master® Commercial 3000 Series Riding Mower

with 60in TURBO FORCE® Side Discharge Mower

Model No. 75936—Serial No. 400000000 and Up

Register at www.Toro.com.
Original Instructions (EN)

3414-601 A

Ordering Replacement Parts

To order replacement parts, please supply the part number, the quantity, and the description of each part desired.

Understanding Reference Numbers

Each identified part in an illustration has a reference number. The reference number for a part also appears in the parts list, along with other information about the part.

This catalog uses two special reference number formats, one to indicate parts in a service assembly and another to indicate the quantity of a given part in an illustration.

Service Assembly Reference Numbers

Parts in service assemblies have reference numbers in the form a:b. The a represents the reference number of the entire service assembly and the b represents a sequential number unique to each part within the service assembly.

For example, a wheel assembly might be identified by reference number 6, the tire by 6:1, the valve by 6:2, and the wheel by 6:3. When you order the assembly identified by reference number 6, you receive all parts identified by reference numbers 6:1,6:2, and 6:3. However, you may also order any part individually. Reference numbers of this type appear in illustration and in parts lists.

Reference Numbers Indicating Quantity

In an illustration, if a reference number indicates more than one part, the reference number has the form nX y. The n represents the quantity of the part, the X is the multiplication symbol, and the y represents the reference number.

For example, in an illustration, the reference number 2X 37 means that two of the parts identified by reference number 37 are indicated.

Contents

Frame, Roll-Over Protection System and Caster Wheel Assembly 4
Roll-Over Protection System Assembly No. 116-0231 6
Caster Wheel and Fork Assembly 8
Hydraulic Pump, Idler and Belt Assembly 10
Pump Idler Assembly No. 116-1255 12
LH Hydro Assembly No. 126-1323 14
RH Hydro Assembly No. 126-1324 16
Rear Wheel and Parking Brake Assembly 18
Fuel System Assembly 20
Fuel Tank Assembly No. 135-0645 22
Seat Mount Assembly 24
Motion Control Assembly 26
Console and Control Panel Assembly 28
Electrical System Assembly 30
Deck Lift Assembly 32
Height-of-Cut Assembly No. 109-7438 34
Engine, Muffler and Clutch Assembly 36
Deck Assembly 38
Deck Decal Assembly No. 114-5815 40
Idler Arm Assembly 42
Spindle Assembly No. 127-0560 44
Rubber Deflector Assembly No. 108-2792 46
Suspension Platform Assembly 48
Seat Assembly No. 116-0035 50
Suspension Platform Rubber Mat Assembly 52
Attachments and Accessories 54

© 2017—The Toro® Company
8111 Lyndale Avenue South
Bloomington, MN 55420

Contact us at www.Toro.com.
Printed in the USA.
All Rights Reserved

Frame, Roll-Over Protection System and Caster Wheel Assembly

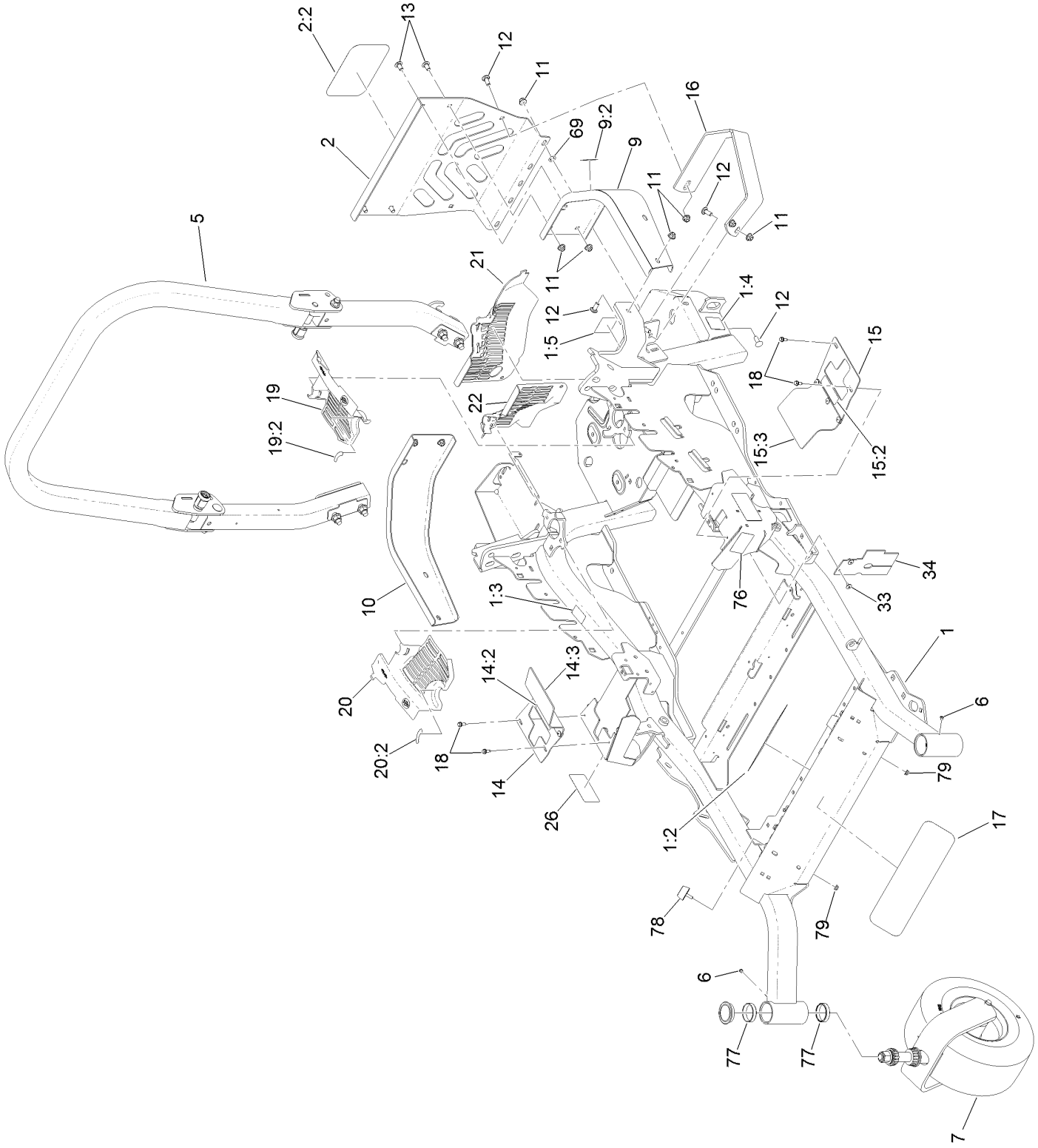

Frame, Roll-Over Protection System and Caster Wheel Assembly (continued)

Ref.	Part Number	Qty.	Description
1	116-5902	1	Mainframe ASM
1:2	132-0871	1	Decal-Danger
1:3	106-5517	2	Decal-Warning
1:4	106-2655	2	Decal-Hazard, Pinched Finger
1:5	116-4858	1	Decal-Spark Arrester
2	115-7410	1	Rear Guard ASM
2:2	67-7320	1	Decal
5	116-0231	1	ROPS ASM
6	1-811010	2	Plug
7		2	Caster Wheel ASM ●
9	116-0180	1	LH Bumper ASM
9:2	106-5517	1	Decal-Warning
10	116-0057-03	1	Bumper-RH
11	104-8301	11	Nut-HF, NI
12	3231-22	7	Screw-CARR
13	3231-21	4	Screw-CARR
14	131-4615	1	RH Motion Control Cover ASM
14:2	99-8936	1	Decal-Control, Motion
14:3	131-4605	1	Flap-Rubber
15	131-4610	1	LH Motion Control Cover ASM
15:2	99-8936	1	Decal-Control, Motion
15:3	131-4605	1	Flap-Rubber
16	126-2067-03	1	Guard-Muffler
17	136-5520	1	Decal
18	32144-10	4	Screw-HWH
19	116-0170	1	LH Hydro Guard ASM
19:2	116-8726	1	Decal-Oil, Hydro
20	116-0171	1	RH Hydro Guard ASM
20:2	116-8726	1	Decal-Oil, Hydro
21	109-9057	1	Guard-Hydro, Rear (LH)
22	109-9058	1	Guard-Hydro, Rear (RH)
26	120-5892	2	Decal
33	1-803035	2	Rivet-Pop
34	116-2362	1	Deflector-Air Flow
69	107-3154	2	Nut-Push
76	117-3864	1	Decal-Fuel Fill, CE
77	1-543508	4	Cup-Bearing
78	131-8834	2	Bumper
79	104-7201	2	Nut-HF

● Not serviced separately

Roll-Over Protection System Assembly No. 116-0231

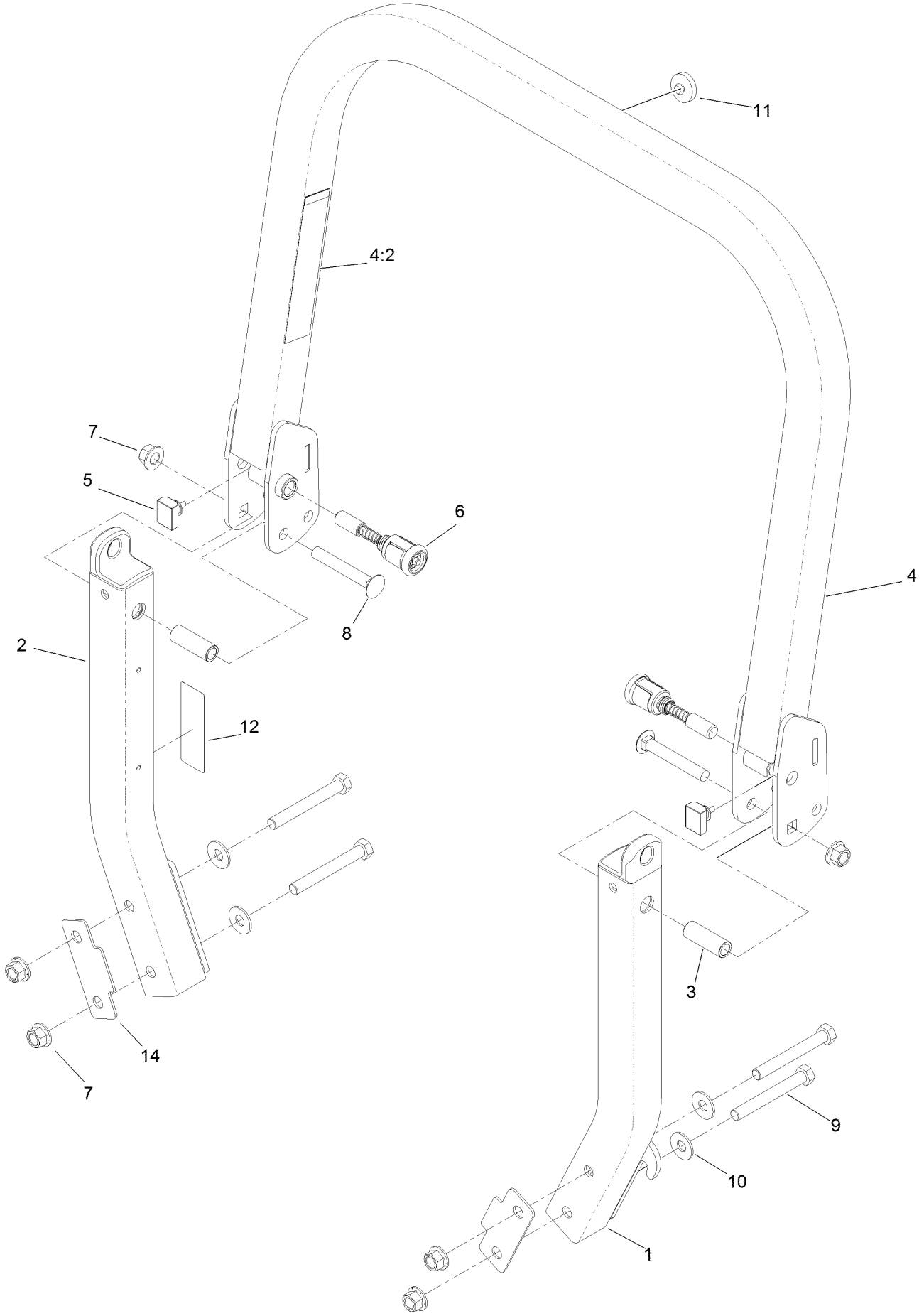

Roll-Over Protection System Assembly No. 116-0231 (continued)

Ref.	Part Number	Qty.	Description
1		1	Leg-ROPS, LH ●
2		1	Leg-ROPS, RH ●
3	109-6653	2	Spacer
4		1	Upper ROPS ASM ●
4:2	107-3069	1	Decal-Warning
5	109-5337	2	Bumper-ROPS
6	116-0104	2	Pin-Spring
7	99-5107	6	Nut-Lock
8	3233-10	2	Screw-CARR
9	325-35	4	Screw-HH
10	109-9505	4	Washer-Spring
11	109-9233	1	Bumper-Push-In, Rubber
12	117-0346	1	Decal-Caution, Fuel Vent
14	116-0960	2	Spacer

● Not serviced separately

Caster Wheel and Fork Assembly

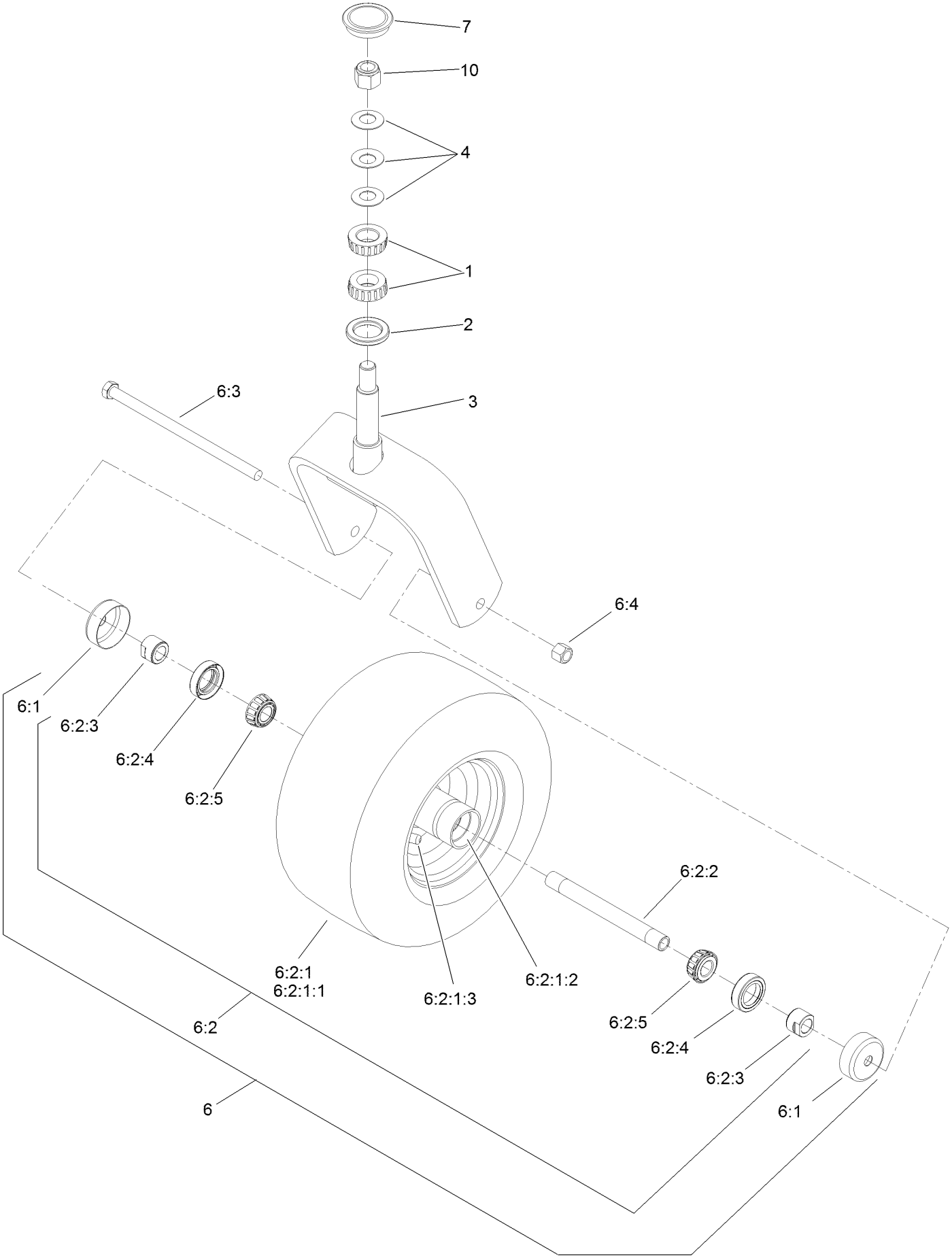

Caster Wheel and Fork Assembly (continued)

Ref.	Part Number	Qty.	Description
1	1-543509	2	Bearing-Roller, Tapered
2	116-5647	1	Seal-Grease
3	116-6707-01	1	Caster
4	1-633508	3	Washer-Bellville
6	127-9540	1	Wheel And Axle ASM
6:1	103-2768	2	Guard-Seal
6:2		1	Wheel And Bearing ASM ●
6:2:1		1	Wheel And Tire ASM ●
6:2:1:1	1-523009	1	Tire
6:2:1:2	1-633584	2	Bearing-Cup
6:2:1:3	5108	1	Valve
6:2:2	126-5361	1	Axle Caster ASM
6:2:3	103-3051	1	Spacer-Nut
6:2:4	103-0063	2	Seal-Caster
6:2:5	1-633585	2	Bearing-Cone, Taper
6:3	325-39	1	Screw-HH
6:4	3296-23	1	Nut-Lock, NI
7	103-4882	1	Cap-Grease
10	3296-51	1	Nut-Lock, NI

● Not serviced separately

Hydraulic Pump, Idler and Belt Assembly

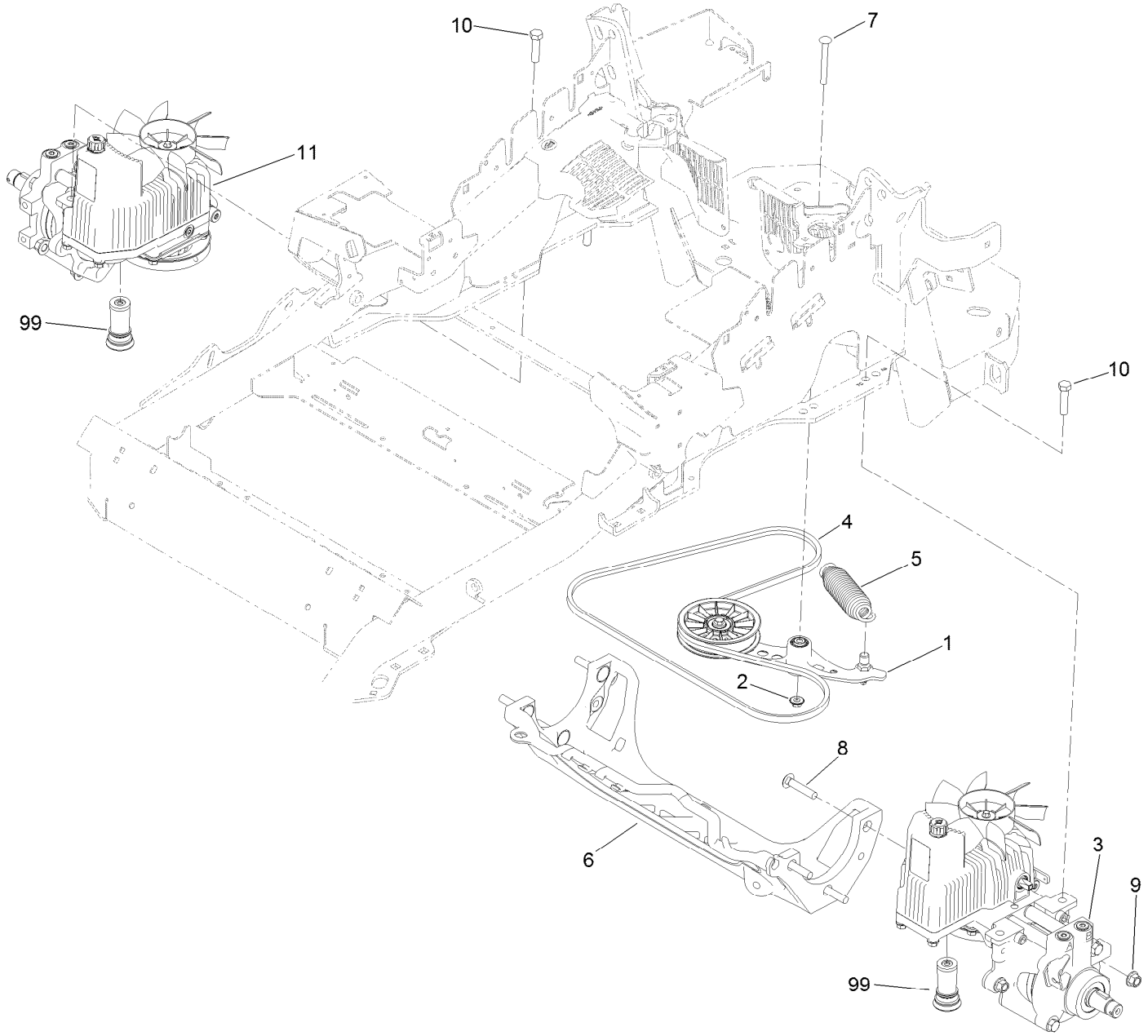

Hydraulic Pump, Idler and Belt Assembly (continued)

Ref.	Part Number	Qty.	Description
1	116-1255	1	Pump Idler ASM
2	109-6658	1	Nut-Flange, NI
3	126-1323	1	LH Hydro ASM (12Cc W/ Shock)
4	109-3388	1	Belt
5	116-6317	1	Spring-Extension
6	116-7558	1	Cradle-Hydro
7	116-1502	1	Bolt-Shoulder, Carriage
8	126-0095	6	Screw-CARR
9	99-5107	6	Nut-Lock
10	325-8	4	Screw-HH
11	126-1324	1	RH Hydro ASM (12Cc W/ Shock)
99	114-4713	1	Hypr-Oil 500 (Quart) ●
99	114-4714	1	Hypr-Oil 500 (Gallon) ●
99	114-4715	1	Hypr-Oil 500-5 (5 Gallon) ●
99	117-0390	1	Filter-Hydro

● Not illustrated

Pump Idler Assembly No. 116-1255

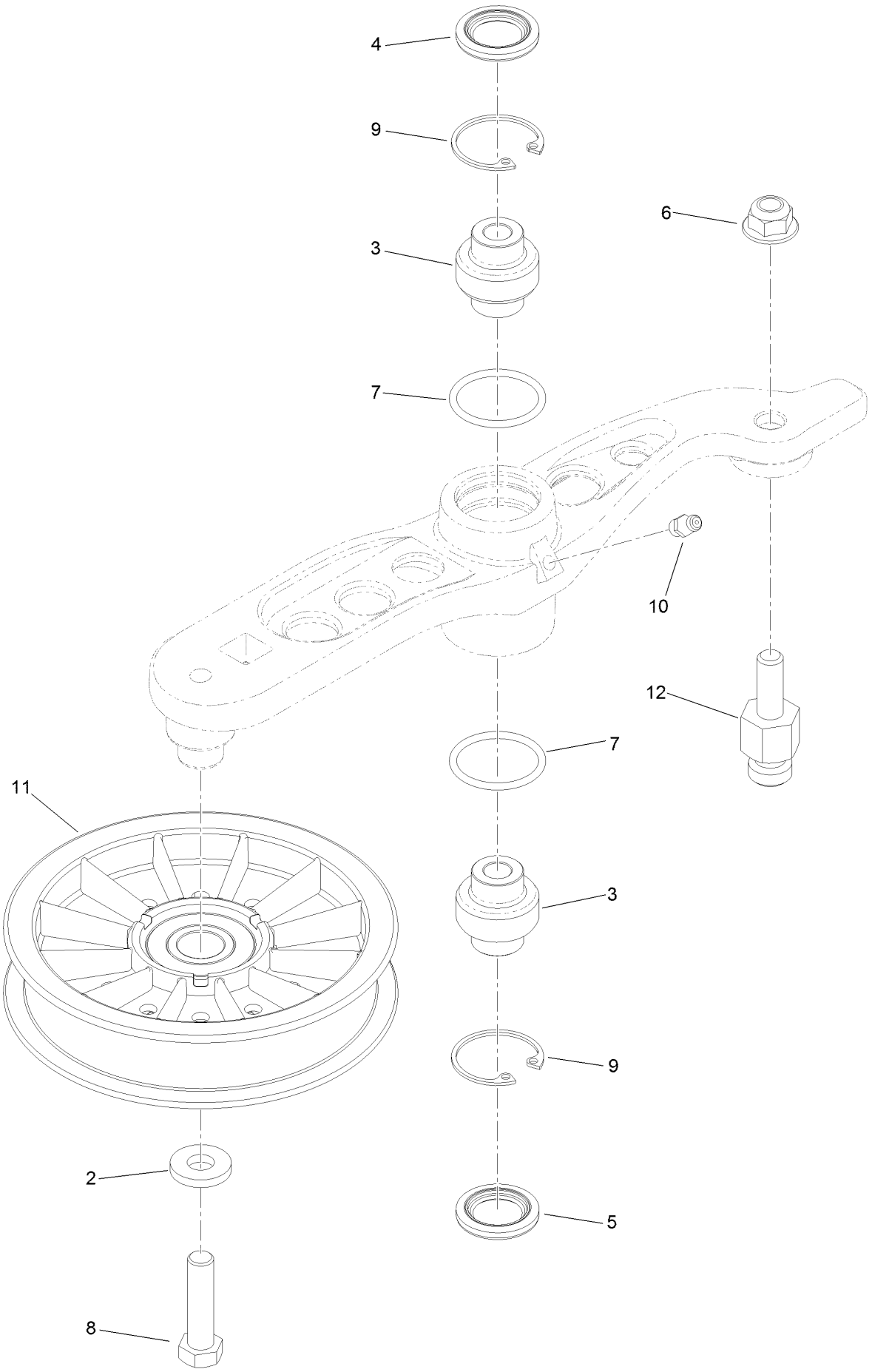

Pump Idler Assembly No. 116-1255 (continued)

Ref.	Part Number	Qty.	Description
2	43-0940	1	Spacer
3	103-3504	2	Bearing-Spherical
4	103-3505	1	Seal-Double Lip
5	103-3506	1	Seal-Lip, Single
6	109-6658	1	Nut-Flange, NI
7	106-7159	2	O-Ring
8	323-8	1	Screw-HH
9	32120-10	2	Ring-Snap
10	302-19	1	Fitting-Grease
11	109-8076	1	Pulley-Idler
12	132-4724	1	Pin-Anchor, Spring

LH Hydro Assembly No. 126-1323

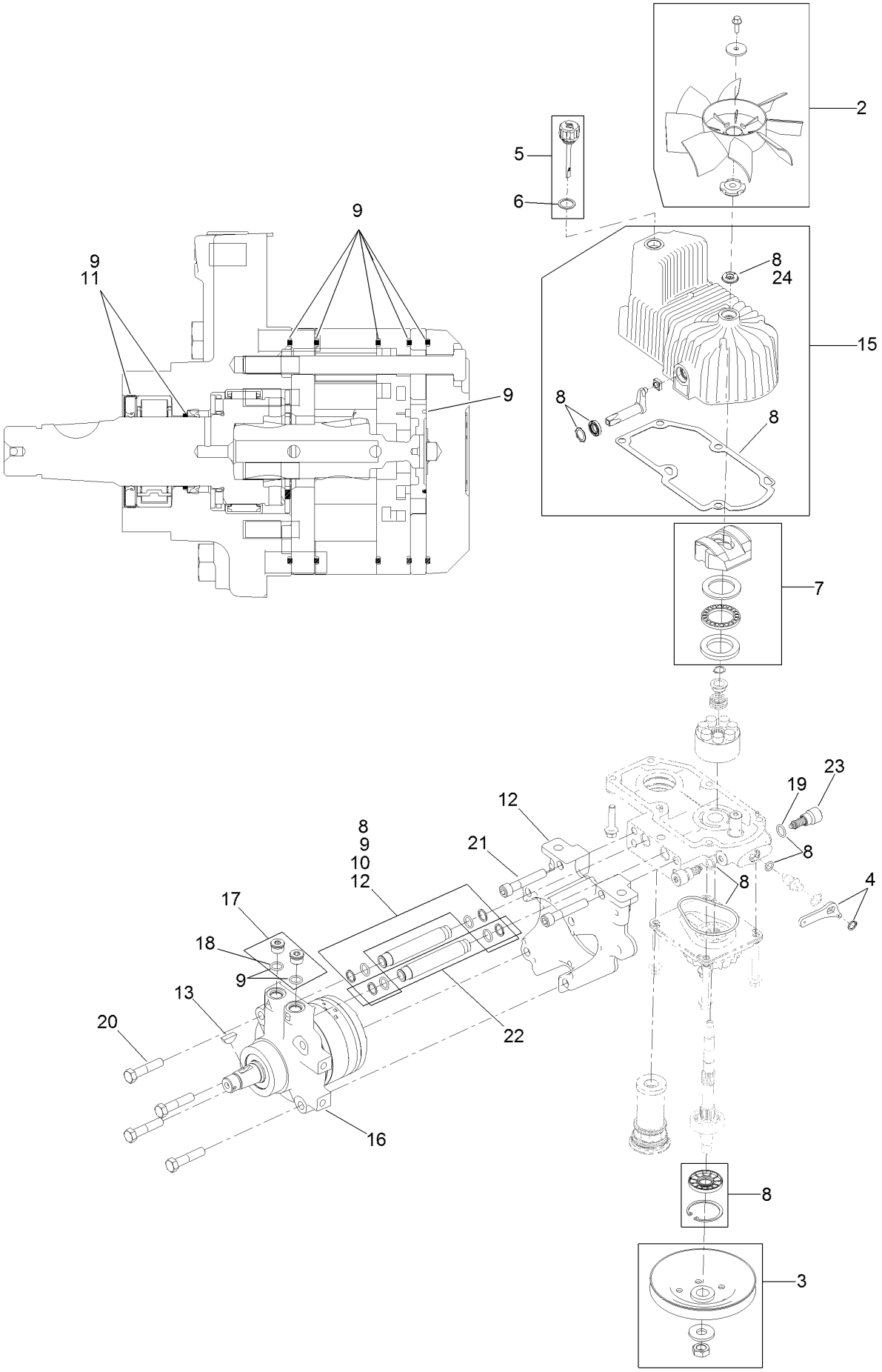

LH Hydro Assembly No. 126-1323 (continued)

Ref.	Part Number	Qty.	Description
2	116-0233	1	Fan Kit
3	116-0234	1	Pulley Kit
4	116-0235	1	Handle-Bypass Valve, Hydro
5	116-0236	1	Dipstick-Hydro W/Gasket
6	116-0237	1	Gasket-Dipstick, Hydro
7	116-1367	1	Swash Block Kit
8	116-1368	1	Pump Seal Kit
9	116-1369	1	Motor Seal Kit
10	116-1370	1	Tube Seal Kit
11	116-1371	1	Output Shaft Seal Kit
12	116-5469	1	Nose Cup-Uht
13	3257-42	1	Key-Woodruff
15	116-3287	1	Housing-LH
16	116-8915	1	Motor-Hydraulic LH 240Cc
17	116-7901	1	Magnetic Plugs Service Kit
18	76-1900	2	O-Ring
19	116-8662	2	O-Ring-Check Valve
20	116-8974	4	Screw HH
21	116-8975	2	Screw-HSH
22	116-9922	2	Hydraulic Tube Kit
23	126-7466	2	Shock Valve, 12Cc Hydro
24	126-7711	1	Seal-Fan Drive
99	116-4245	1	Puller-Pulley ●
99	116-1373	1	Flow Test Kit ●

● Not illustrated

RH Hydro Assembly No. 126-1324

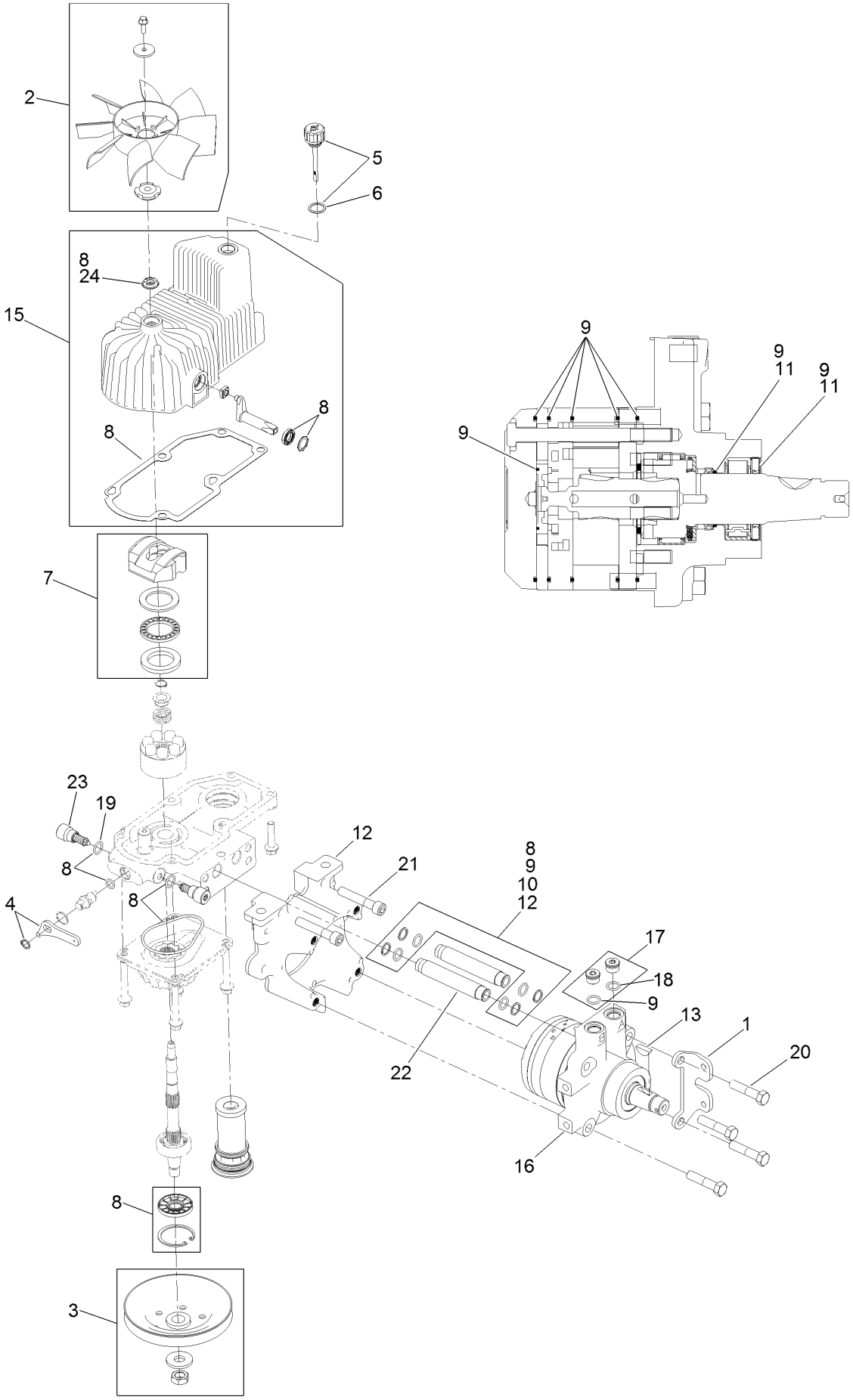

RH Hydro Assembly No. 126-1324 (continued)

Ref.	Part Number	Qty.	Description
1	116-9063	1	Mount-Shoe, Horse
2	116-0233	1	Fan Kit
3	116-0234	1	Pulley Kit
4	116-0235	1	Handle-Bypass Valve, Hydro
5	116-0236	1	Dipstick-Hydro W/Gasket
6	116-0237	1	Gasket-Dipstick, Hydro
7	116-1367	1	Swash Block Kit
8	116-1368	1	Pump Seal Kit
9	116-1369	1	Motor Seal Kit
10	116-1370	1	Tube Seal Kit
11	116-1371	1	Output Shaft Seal Kit
12	116-5469	1	Nose Cup-Uht
13	3257-42	1	Key-Woodruff
15	116-3288	1	Housing-RH
16	116-8916	1	Motor-Hydraulic RH 240Cc
17	116-7901	1	Magnetic Plugs Service Kit
18	76-1900	2	O-Ring
19	116-8662	2	O-Ring-Check Valve
20	116-8974	4	Screw HH
21	116-8975	2	Screw-HSH
22	116-9922	2	Hydraulic Tube Kit
23	126-7466	2	Shock Valve, 12Cc Hydro
24	126-7711	1	Seal-Fan Drive
99	116-4245	1	Puller-Pulley ●
99	116-1373	1	Flow Test Kit ●

● Not illustrated

Rear Wheel and Parking Brake Assembly

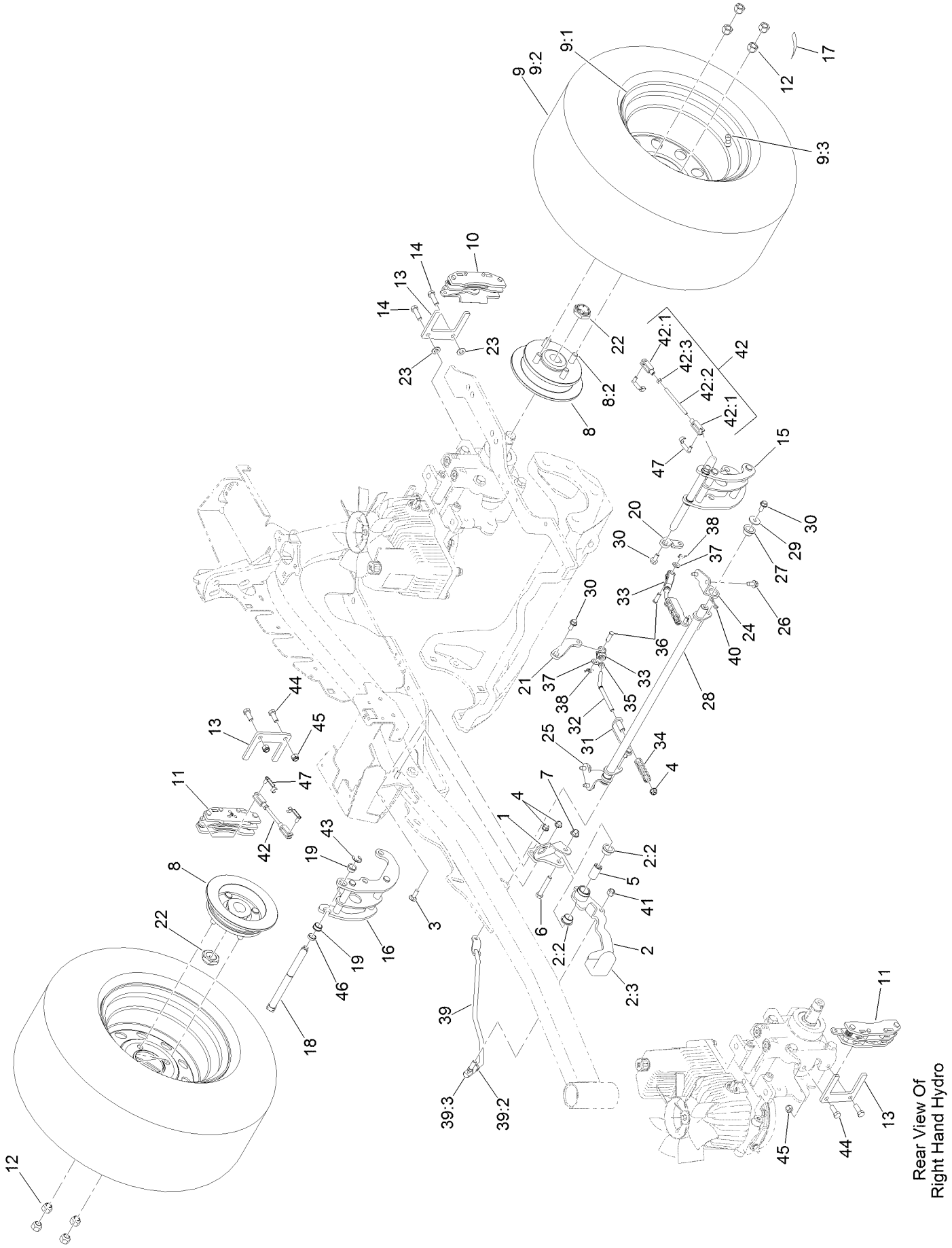

Rear Wheel and Parking Brake Assembly (continued)

Ref.	Part Number	Qty.	Description
1	116-9096-01	1	Bracket-Mount
2	131-4623	1	Brake Lever ASM W/ Grip
2:2	109-8054	2	Bushing-Flange
2:3	132-4749	1	Grip-Lever
3	3230-2	2	Bolt-CARR
4	104-8300	4	Nut-HF, NI
5	116-9117	1	Handle-Pivot, Brake
6	323-11	1	Screw-HH
7	104-8301	1	Nut-HF, NI
8	116-1746	2	Wheel Hub ASM
8:2	116-1696	4	Stud-Wheel
9	127-9520	2	Wheel And Tire ASM
9:1	127-9517	1	Wheel
9:2	1-633993	1	Tire
9:3	232-27	1	Stem-Valve
10	109-2889	1	Caliper-Brake
11	116-9103	1	Caliper-Brake, RH
12	242-50	8	Nut-Lug
13	109-0958	2	Plate-Mount, Brake
14	92-5727	2	Screw-Lock, Patch
15	126-4248	1	Mount-Bellcrank, LH
16	126-4249	1	Mount-Bellcrank, RH
17	126-2055	2	Decal-Torque, Wheel Hub Lug
18	126-4251	2	Bellcrank
19	126-6199	4	Bushing-Igus
20	126-3715	1	Arm-Inner, LH
21	126-3716	1	Arm-Inner, RH
22	116-1399	2	Locknut
23	3256-24	2	Washer-Flat
24	116-9681	1	Mount-Pivot, LH
25	116-9682	1	Mount-Pivot, RH
26	32144-70	4	Screw-HWHTF
27	109-8054	2	Bushing-Flange
28	116-9080	1	Shaft-Cross
29	115-7109	2	Washer-Flat
30	98-9940	4	Screw
31	116-9609	2	Bracket-L
32	116-9086	2	Linkage-Mid
33	126-3693	2	Yoke-Offset
34	116-9085	2	Spring-Compression
35	3220-2	2	Nut-Jam
36	1-808280	2	Pin-Clevis
37	3256-23	4	Washer-Plain
38	116-6639	2	Pin-Cotter, Locking
39	116-9102	1	Front Linkage ASM
39:2	94-7572	1	End-Tie Rod, RH
39:3	3220-3	1	Nut-HJ
40	119-1415	2	Pin-Cotter, Locking
41	3296-6	1	Nut-Lock
42	126-7587	2	Rear Linkage ASM
42:1	126-7588	2	Yoke
42:2	116-9069	1	Linkage, Rear
42:3	3220-1	1	Nut-Jam
43	32120-19	2	E-Ring
44	323-6	2	Screw-HH
45	3296-39	2	Nut-Lock, NI
46	126-6200	2	Spacer
47	126-6395	4	Pin-Clevis, Spring

Fuel System Assembly

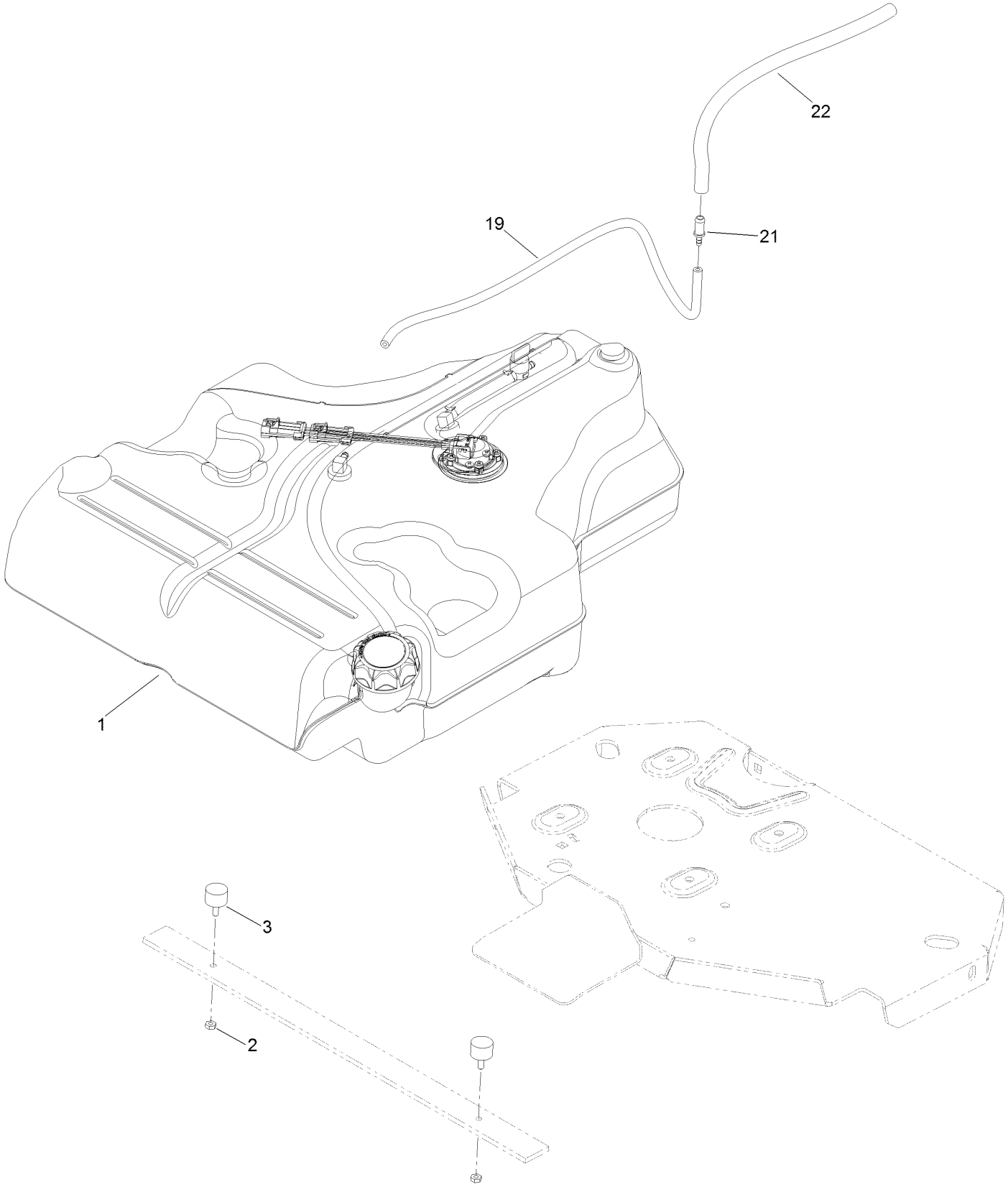

Fuel System Assembly (continued)

Ref.	Part Number	Qty.	Description
1	135-0645	1	Fuel Tank ASM
2	3218-1	2	Nut-Jam
3	1-523420	2	Bumper

Ref.	Part Number	Qty.	Description
19	110-8751	1	Hose-Fuel
21	98-2952	1	Fitting-Straight
22	116-4344	1	Hose-Fuel

Fuel Tank Assembly No. 135-0645

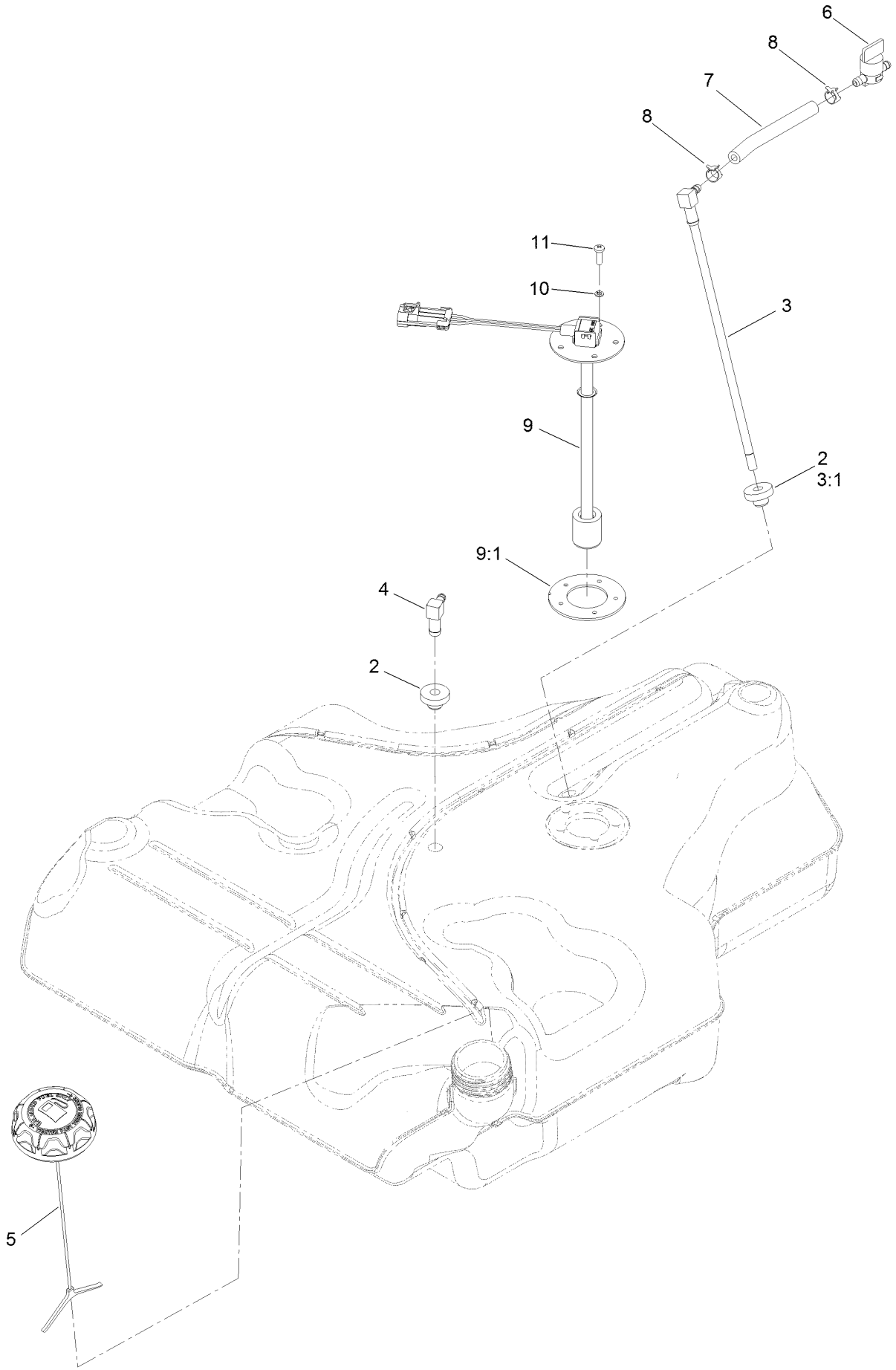

Fuel Tank Assembly No. 135-0645 (continued)

Ref.	Part Number	Qty.	Description
2	46-6560	2	Bushing
3	116-2459	1	Fuel Line Kit (With Grommet)
3:1	46-6560	1	Bushing
4	116-2288	1	Fitting-90 Elbow
5	126-1789	1	Cap-Fuel, Ratcheting
6	1-603770	1	Valve-Fuel
7	109-0650	1	Hose-Fuel
8	2412-98	2	Clamp-Hose
9	126-3949	1	Sender-Level, Fuel (W/Gasket)
9:1	126-3950	1	Gasket-Sender
10	3253-17	5	Washer-Lock
11	3290-500	5	Screw-PPH

Seat Mount Assembly

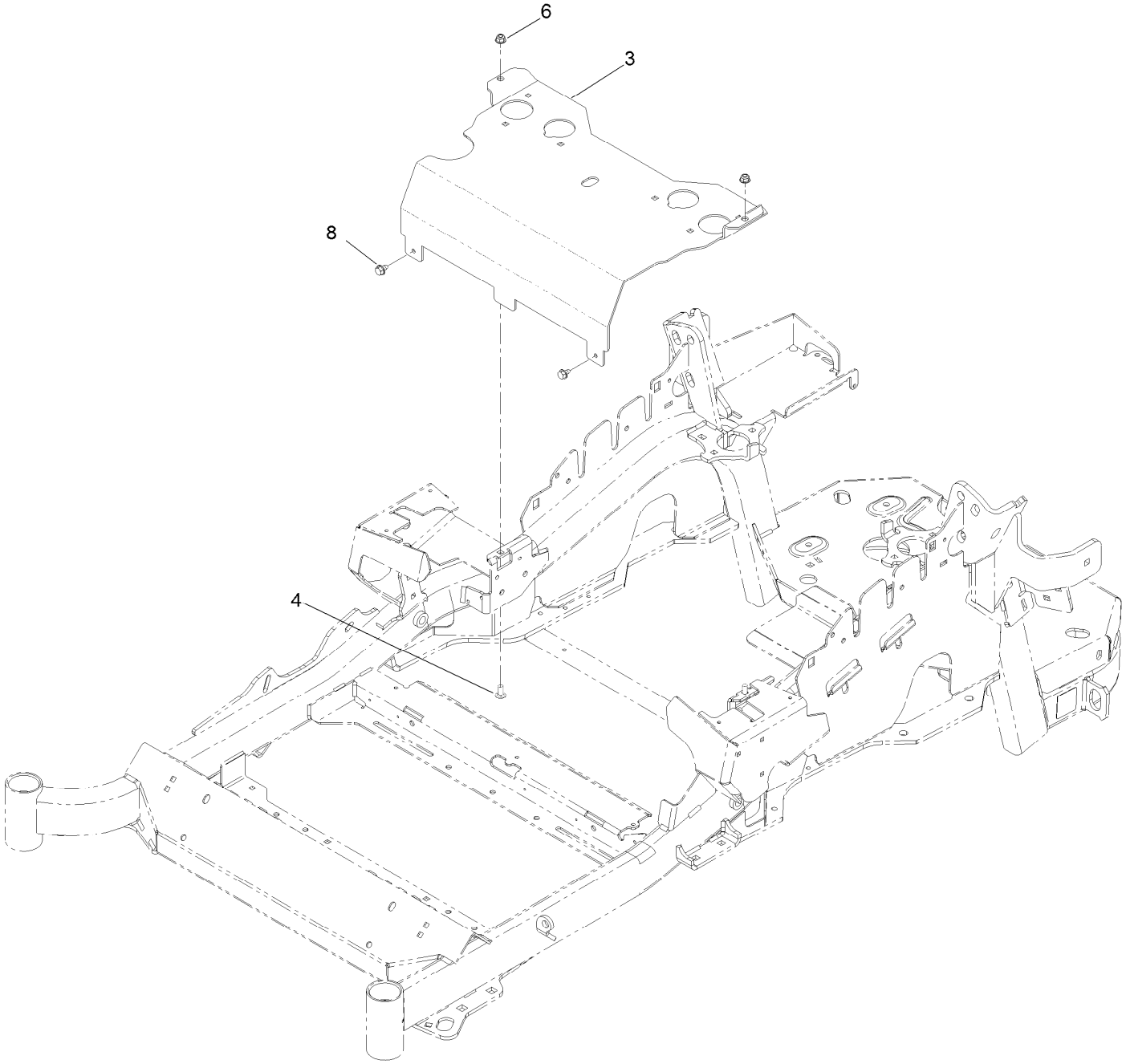

Seat Mount Assembly (continued)

Ref.	Part Number	Qty.	Description
3	116-2130-03	1	Panel-Front, Seat Mount
4	3230-23	2	Screw-CARR
6	104-8300	2	Nut-HF, NI
8	9266934	2	Screw

Motion Control Assembly

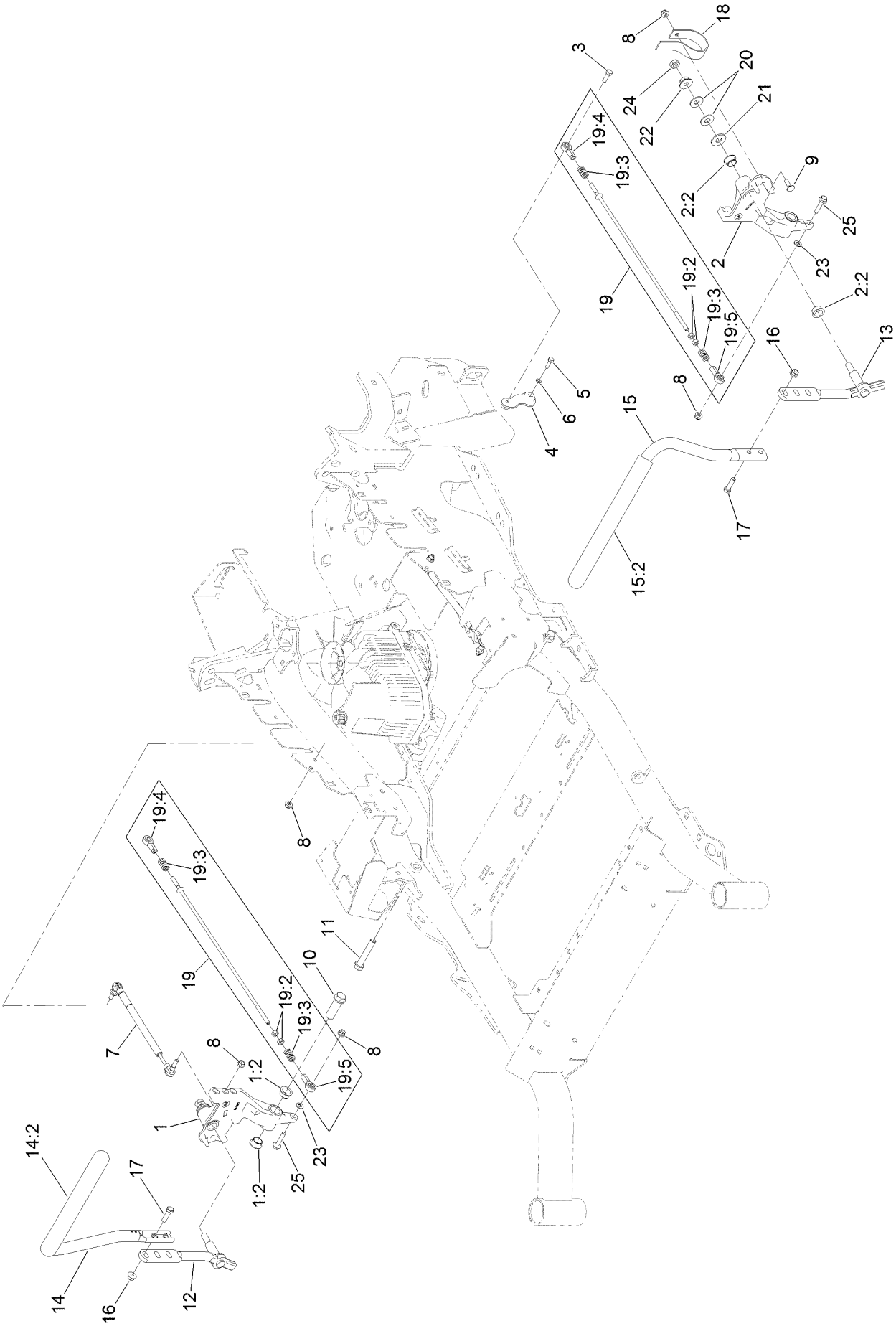

Motion Control Assembly (continued)

Ref.	Part Number	Qty.	Description
1	116-0880	1	RH Motion Control And Bushing ASM
1:2	109-8054	4	Bushing-Flange
2	116-0881	1	LH Motion Control And Bushing ASM
2:2	109-8054	4	Bushing-Flange
3	116-0648	2	Screw-HH, Thread Locking ●
4	109-4581	2	Arm-Control, Pump
5	9080046	2	Screw-HH ●
6	1-303435	2	Washer-Spring
7	116-0027	2	Damper-Control, Motion
8	104-8300	8	Nut-HF, NI
9	3230-2	2	Bolt-CARR
10	109-5891	2	Hub-Threaded
11	325-12	2	Screw-HH
12	116-0039	1	Lever-Control Motion, RH
13	116-0040	1	Lever-Control Motion, LH

Ref.	Part Number	Qty.	Description
14	133-1839	1	RH Steering Handle ASM
14:2	109-5668	1	Grip-Control, Lever
15	133-1841	1	LH Steering Handle ASM
15:2	109-5668	1	Grip-Control, Lever
16	104-8301	4	Nut-HF, NI
17	323-7	4	Screw-HH
18	109-5575	2	Spring-Leaf
19	109-8106	2	Front Pump Linkage ASM
19:2	3219-2	2	Nut-Hex
19:3	1-323245	2	Spring-Compression
19:4	1-633152	1	Balljoint-LH
19:5	1-543017	1	Balljoint-RH
20	109-9505	4	Washer-Spring
21	3256-6	2	Washer-Flat
22	32128-56	2	Nut-HF
23	3256-23	2	Washer-Plain
24	3218-5	2	Nut-Jam
25	115-1794	2	Screw-HHF

● Use Pro-Lock, Nut Type (P/N 1-840022, .5ml tube) on threads.

Console and Control Panel Assembly

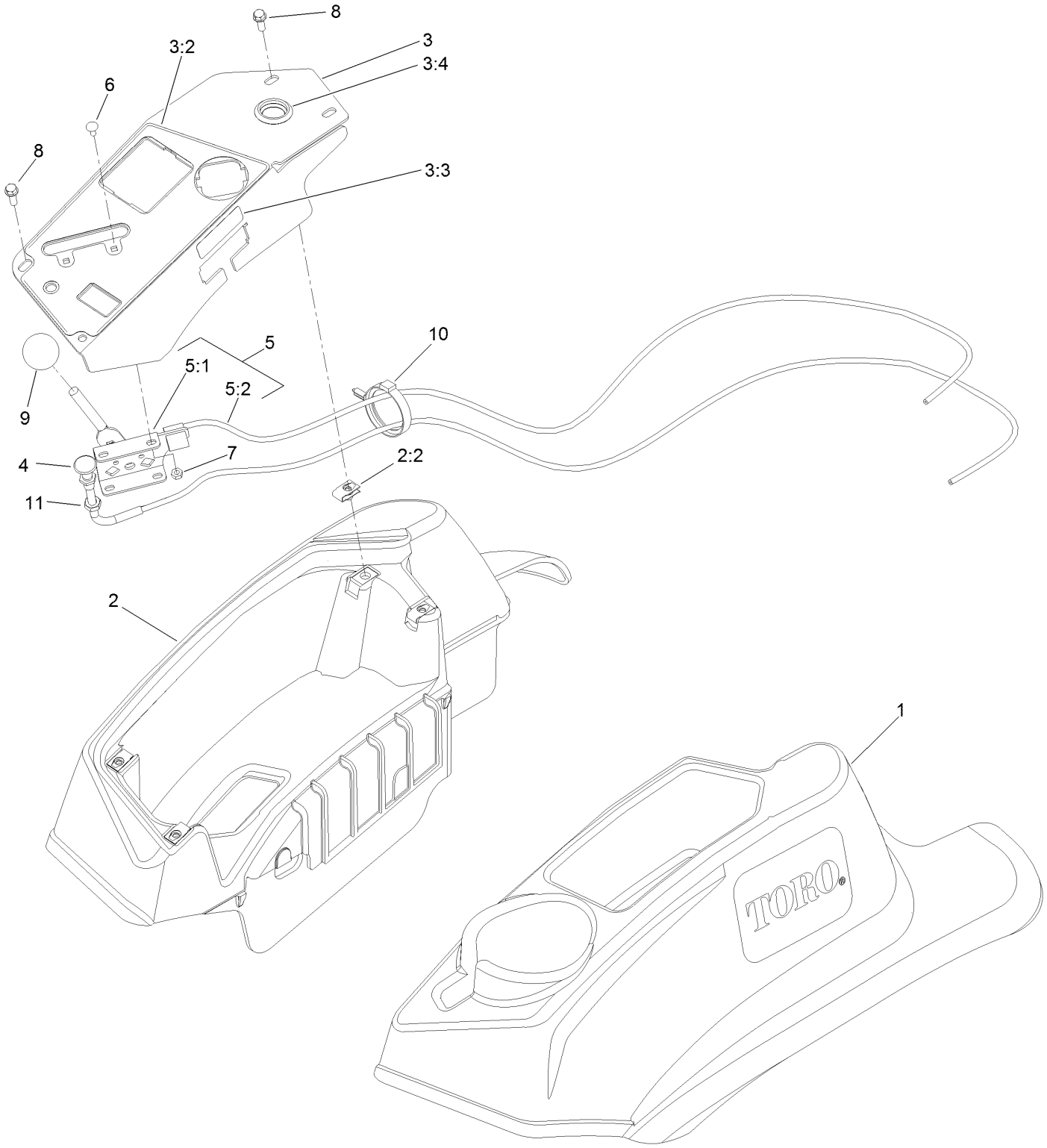

Console and Control Panel Assembly (continued)

Ref.	Part Number	Qty.	Description
1	119-2602	1	Console-LH
2	119-2603	1	RH Console ASM
2:2	107069	4	Clip
3	119-6663	1	Control Panel ASM
3:2	121-7551	1	Decal-Control Panel
3:3	114-4466	1	Decal-Fuses
3:4	116-1875	1	Plug-Plastic
4	115-2753	1	Control-Choke
5	110-5727	1	Throttle Control ASM

Ref.	Part Number	Qty.	Description
5:1	112-2334	1	Lever-Throttle
5:2	110-5728	1	Cable-Throttle
6	1-807513	2	Bolt-CARR
7	3296-2	2	Nut-Lock, NI
8	32105-15	4	Screw-HWH
9	1-603175	1	Knob-Ball
10	117-7817	1	Clamp-Harness
11	3220-3	1	Nut-HJ

Electrical System Assembly

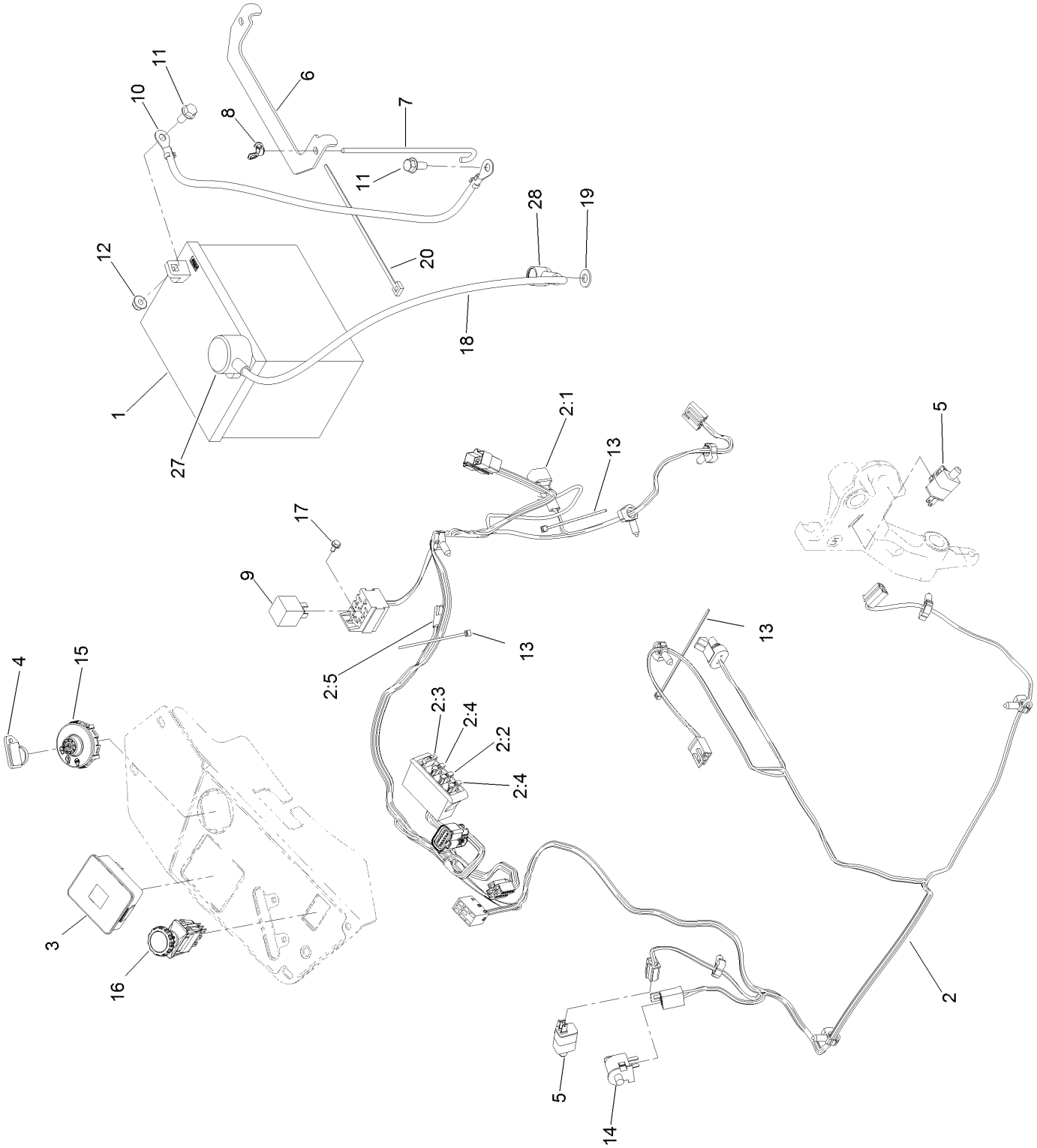

Electrical System Assembly (continued)

Ref.	Part Number	Qty.	Description
1	104-8162	1	Battery-Dry
2	116-6009	1	Harness-Wire, Main ●
2:1	103-3895	1	Diode
2:2	218-578	1	Fuse-Blade, 10 Amp
2:3	109355	1	Fuse-Blade, 15 Amp
2:4	109102	2	Fuse-Blade, 25 Amp
2:5	116-0053	1	Cap-Plug
3	117-3882	1	Fuel/Hour Meter ASM
4	63-8360	1	Key-Ignition
5	110-6765	2	Switch
6	116-0042-03	1	Strap-Tie Down, Battery
7	1-633651	2	Bolt-Holddown
8	1-543792	2	Wingnut
9	1-643275	1	Relay
10	114-1218	1	Cable-Battery, Negative
11	3234-5	2	Screw-HHF
12	104-8300	2	Nut-HF, NI
13	1-303287	3	Tie-Cable
14	82-2190	1	Switch-Bail
15	117-2221	1	Switch-Ignition
16	116-0124	1	Switch-PTO, 10 Amp
17	104-2065	1	Screw-HWH
18	115-3864	1	Cable-Battery, Positive
19	3256-24	1	Washer-Flat
20	1-303335	1	Tie-Plastic
27	109-2407	1	Insulator-Battery
28	1-543393	1	Insulator-Solenoid

● Use dielectric grease on all unsealed connectors and terminals only. Do not apply in sealed connectors.

Deck Lift Assembly

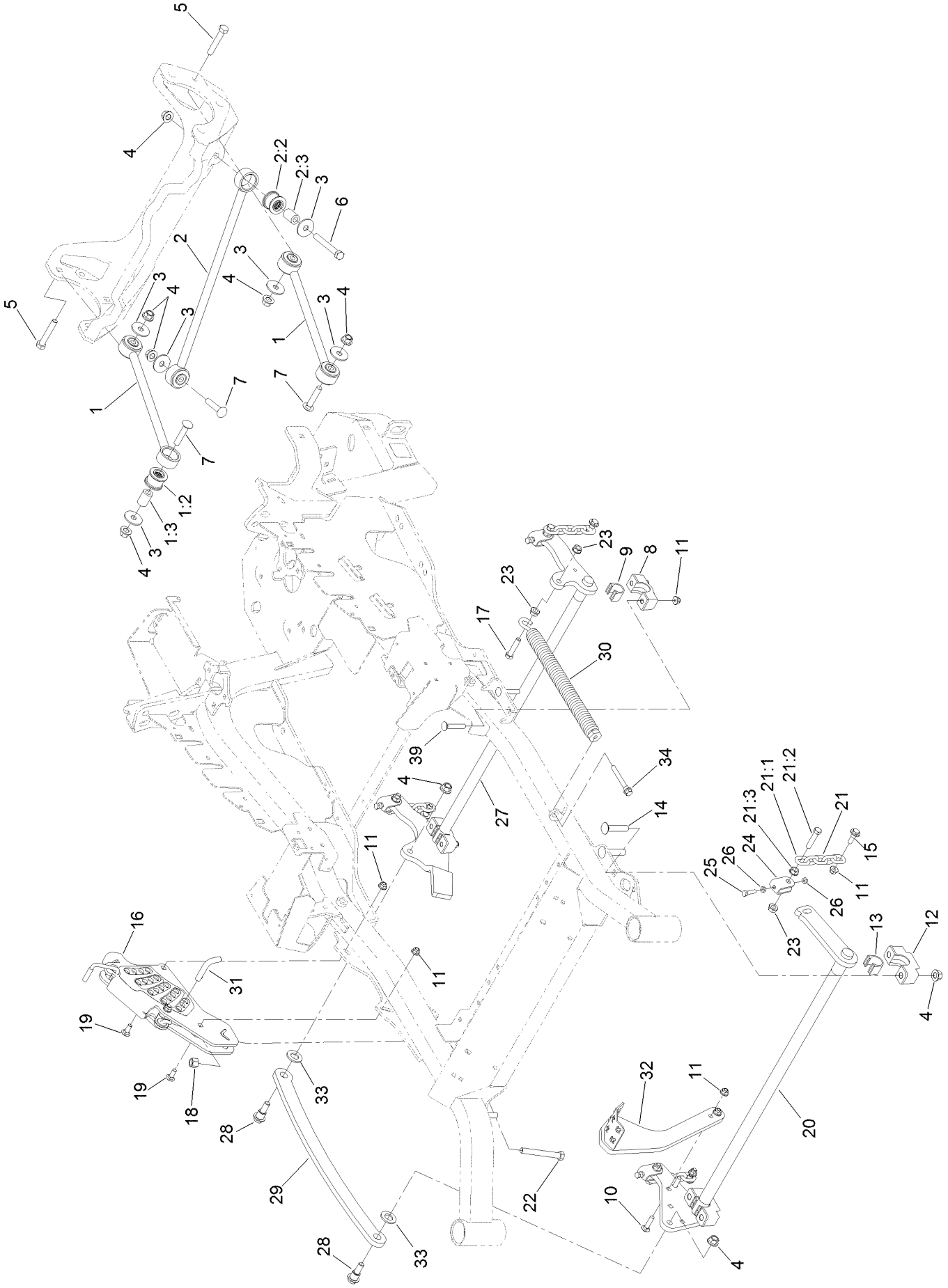

Deck Lift Assembly (continued)

Ref.	Part Number	Qty.	Description
1	109-7952	2	Deck Strut ASM
1:2	109-5009	2	Bushing-Suspension, Rubber
1:3	109-5010	2	Spacer
2	109-5013	1	Panhard Rod ASM
2:2	109-5009	2	Bushing-Suspension, Rubber
2:3	109-5010	2	Spacer
3	86-1990	6	Washer-Thrust
4	99-5107	12	Nut-Lock
5	325-12	2	Screw-HH
6	325-17	1	Screw-HH
7	3233-34	3	Screw-CARR
8	127-0553	2	Support-Cross Shaft, Bearing Rear
9	109-7173	2	Bearing-Cross Shaft, Rear
10	3231-4	2	Screw-CARR
11	104-8301	12	Nut-HF, NI
12	109-9409	2	Support-Cross Shaft, Bearing
13	109-9410	2	Bearing-Cross Shaft, Front
14	116-1700	4	Bolt-CARR
15	109-9840	4	Screw-Shoulder, HHF
16	109-7438	1	HOC ASM
17	109-9065	1	Screw-HH
18	3296-23	1	Nut-Lock, NI
19	3231-2	2	Bolt-CARR
20	126-2475-03	1	Decklift-Front
21	116-0756	4	Deck Lift Chain ASM
21:1	1-633447	1	Chain-Lift, Deck
21:2	109-9065	1	Screw-HH
21:3	32128-37	1	Nut-HF
22	116-0559	1	Bolt-TAP
23	32128-37	6	Nut-HF
24	109-9066	4	Yoke-Adjust, Deck
25	322-47	4	Screw-HH
26	3218-2	8	Nut-Jam
27	116-0459-03	1	Lift-Deck, Rear
28	116-0780	2	Screw-Shoulder, HHF
29	116-0797-03	1	Link-Lift, Deck
30	116-0000	1	Spring-Extension
31	116-5584	1	Pin-HOC
32	131-8812-01	1	Lever-Foot
33	3256-28	2	Washer-Flat
34	92-7674	1	Bolt-Shoulder
39	3231-7	4	Screw-CARR

Height-of-Cut Assembly No. 109-7438

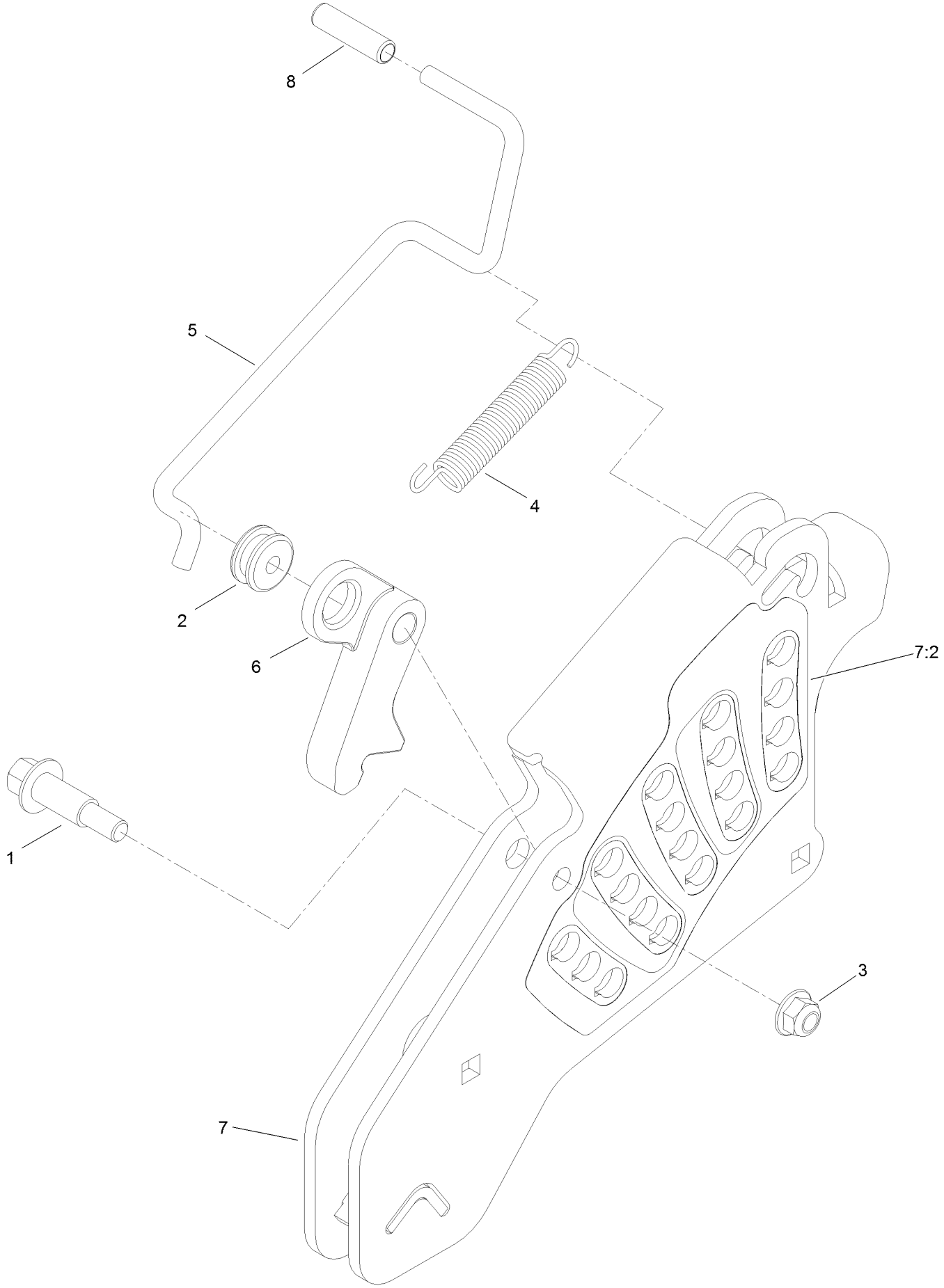

Height-of-Cut Assembly No. 109-7438 (continued)

Ref.	Part Number	Qty.	Description
1	62-1330	1	Bolt-Shoulder
2	109-7130	1	Grommet
3	104-8301	1	Nut-HF, NI
4	109-7124	1	Spring-Extension
5	109-7128	1	Rod-Lock, Transport
6	116-0118	1	Pawl-Transport, HOC
7	109-7335	1	HOC Plate ASM
7:2	126-4398	1	Decal-HOC
8	109-8250	1	Grip-Lever

Engine, Muffler and Clutch Assembly

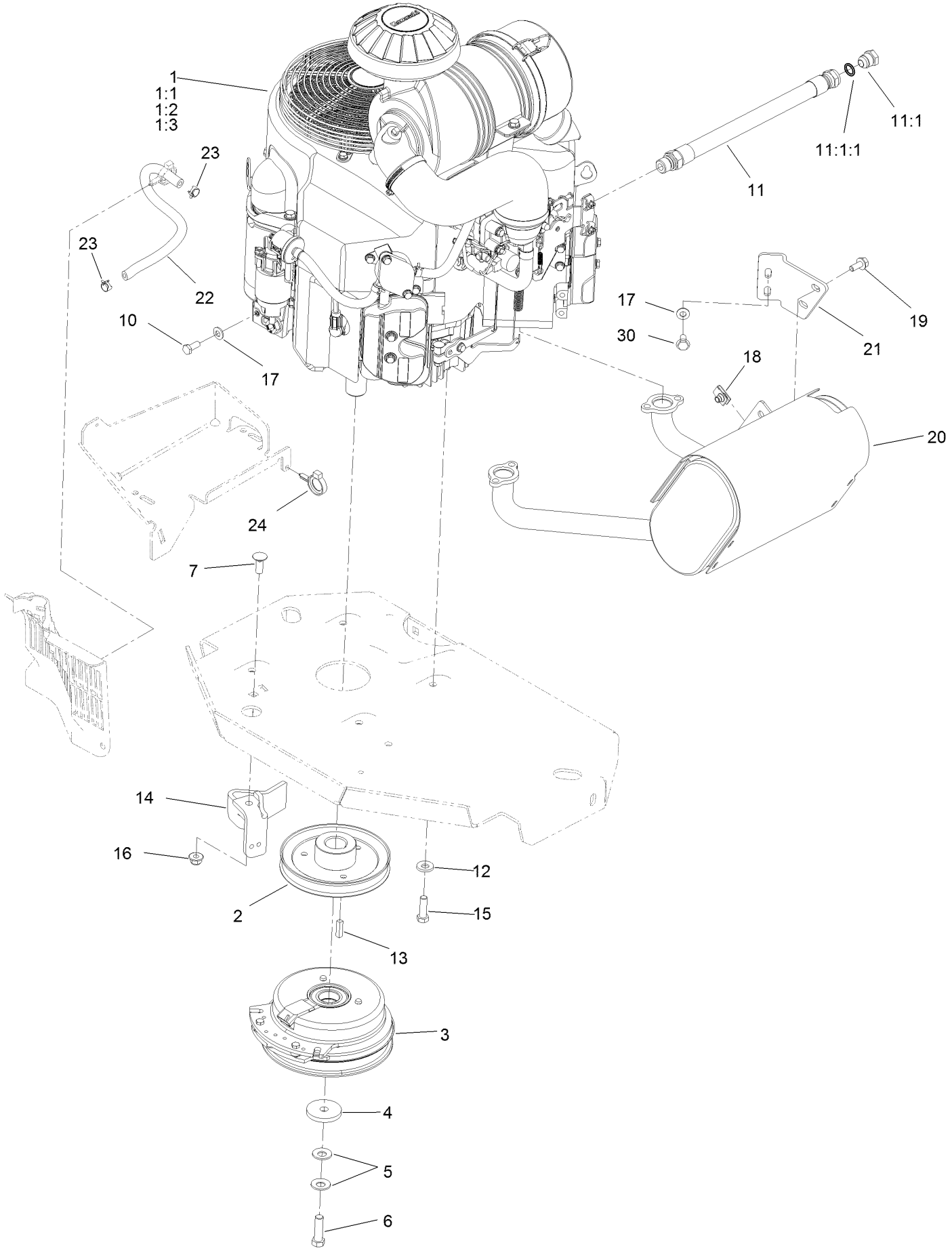

Engine, Muffler and Clutch Assembly (continued)

Ref.	Part Number	Qty.	Description
1		1	Engine-Kawasaki, Fx801V-S04-R ■▲
1:1		1	Kawasaki 49065-2078 Engine Oil Filter ■▲
1:2		1	Kawasaki 11013-7044 Engine Air Filter ■▲
1:3		1	Kawasaki 11013-7045 Safety Filter ■▲
2	109-9905	1	Sheave
3	116-1620	1	Clutch Kit
4	109-6919	1	Washer-Clutch
5	1-603610	2	Washer-Spring
6	109-9761	1	Screw-HH ◆
7	3231-22	1	Screw-CARR
10	33114-020	1	Screw-HH
11	116-4924	1	Engine Oil Drain Hose ASM

Ref.	Part Number	Qty.	Description
11:1	353-508	1	Plug-HH ●
11:1:1	237-42	1	O-Ring
12	98-5975	4	Washer-Belleville
13	1-807259	1	Key
14	116-2612-01	1	Clutch-Anchor
15	323-7	4	Screw-HH
16	104-8301	1	Nut-HF, NI
17	1-303334	3	Washer-Spring
18	94-2413	2	Nut-U
19	3234-5	2	Screw-HHF
20	116-1712	1	Muffler
21	116-0203	1	Bracket-Muffler
22	109-0296	1	Hose-Fuel
23	2412-98	2	Clamp-Hose
24	105-1853	1	Clamp-Hose
30	95-4184	2	Screw-HHF

● Torque to 24-26 ft-lb
▲ Obtain parts from www.kawpowerepc.com
◆ Use Pro-Lock, Nut Type (P/N 1-840022, .5ml tube) on threads.
■ Not serviced separately

Deck Assembly

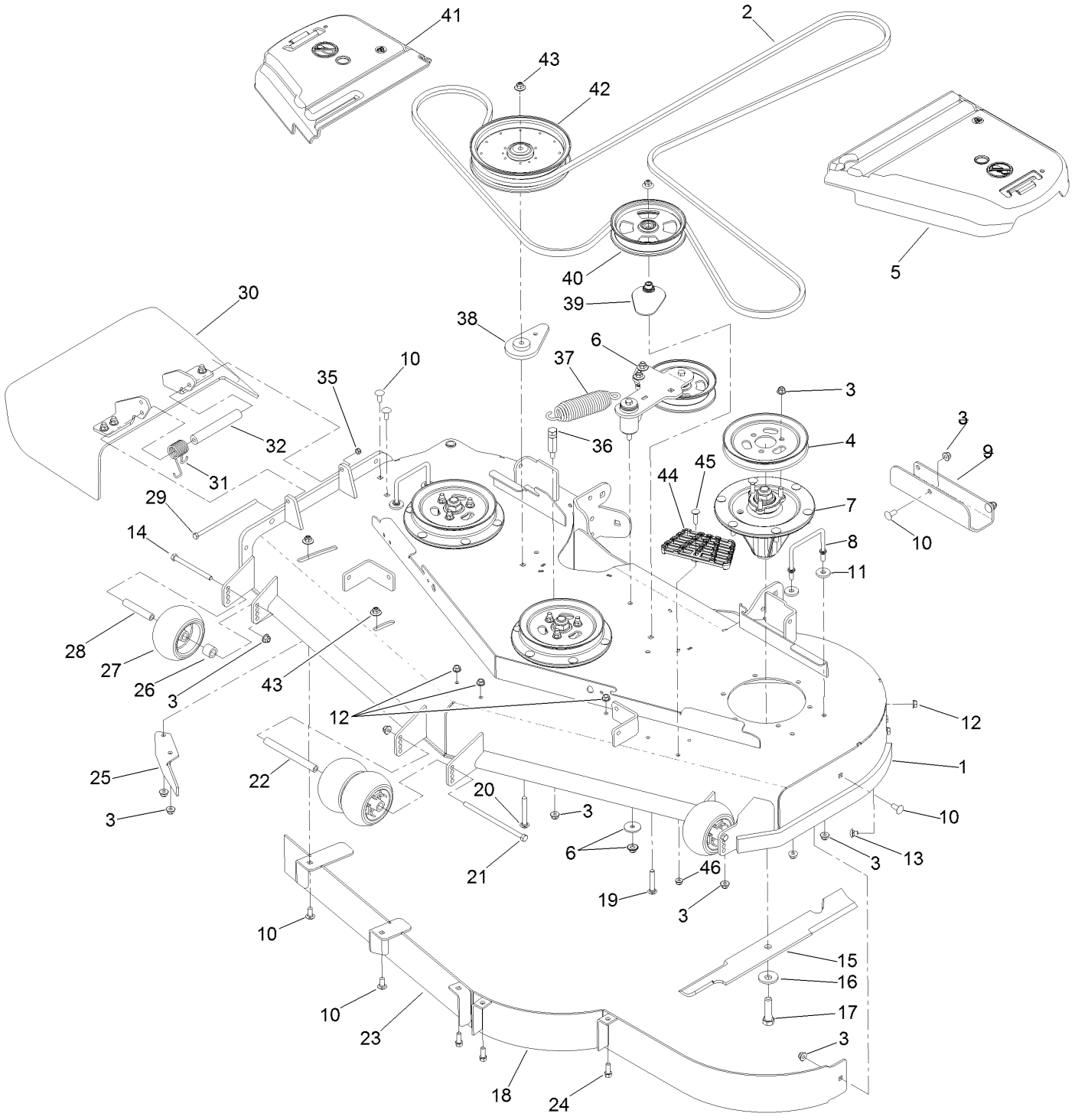

Deck Assembly (continued)

Ref.	Part Number	Qty.	Description
1	114-5815	1	Deck Decal ASM
2	114-5858	1	Belt-V
3	104-8301	42	Nut-HF, NI
4	105-7734	3	Pulley
5	109-6938	1	Cover-Belt, LH
6		1	Idler Arm ASM ●
7	127-0560	3	Spindle ASM
8	109-6982	2	Wireform-Cover
9	121-8031-01	1	Plate-Skid
10	3231-27	9	Screw-CARR
11	1-373034	4	Washer
12	3290-357	6	Nut-HHF, Whiz
13	108-5387	3	Screw-CARR
14	323-23	2	Screw-HH
15	105-7718-03	3	Blade-Hi Flow
16	103-0865	3	Washer-Blade Bolt, Heavy
17	51-4060	3	Screw-Blade
18	114-5842-01	1	Baffle
19	3231-40	1	Bolt-CARR, Short Neck
20	3231-42	1	Screw-CARR
21	108-5388	1	Screw-HH
22	98-5967	1	Spacer-Wheel
23	115-7465-01	1	Baffle
24	92-1624	3	Screw-HWH
25	106-3216-01	1	Baffle-Discharge
26	98-7913	2	Tube-Spacer
27	1-603299	4	Roller-Scalp, Anti
28	98-7912	2	Tube-Spanner
29	322-50	1	Screw-HH
30	108-2792	1	Rubber Deflector ASM
31	108-4052	1	Spring-Torsion
32	105-4622	1	Spacer
35	3296-47	1	Nut-Lock, NI
36	114-5867	1	Anchor-Spring, Tall
37	116-6317	1	Spring-Extension
38	109-9416	1	Spacer-Idler
39	109-2872	1	Spacer-Pulley
40	136-5404	1	Pulley-Idler, Flat
41	116-0094	1	Cover-Belt, RH
42	109-8590	1	Pulley-Idler
43	109-6658	4	Nut-Flange, NI
44	126-4781-03	1	Step-Deck
45	3230-3	1	Screw-CARR
46	104-8300	1	Nut-HF, NI

● Not serviced separately

Deck Decal Assembly No. 114-5815

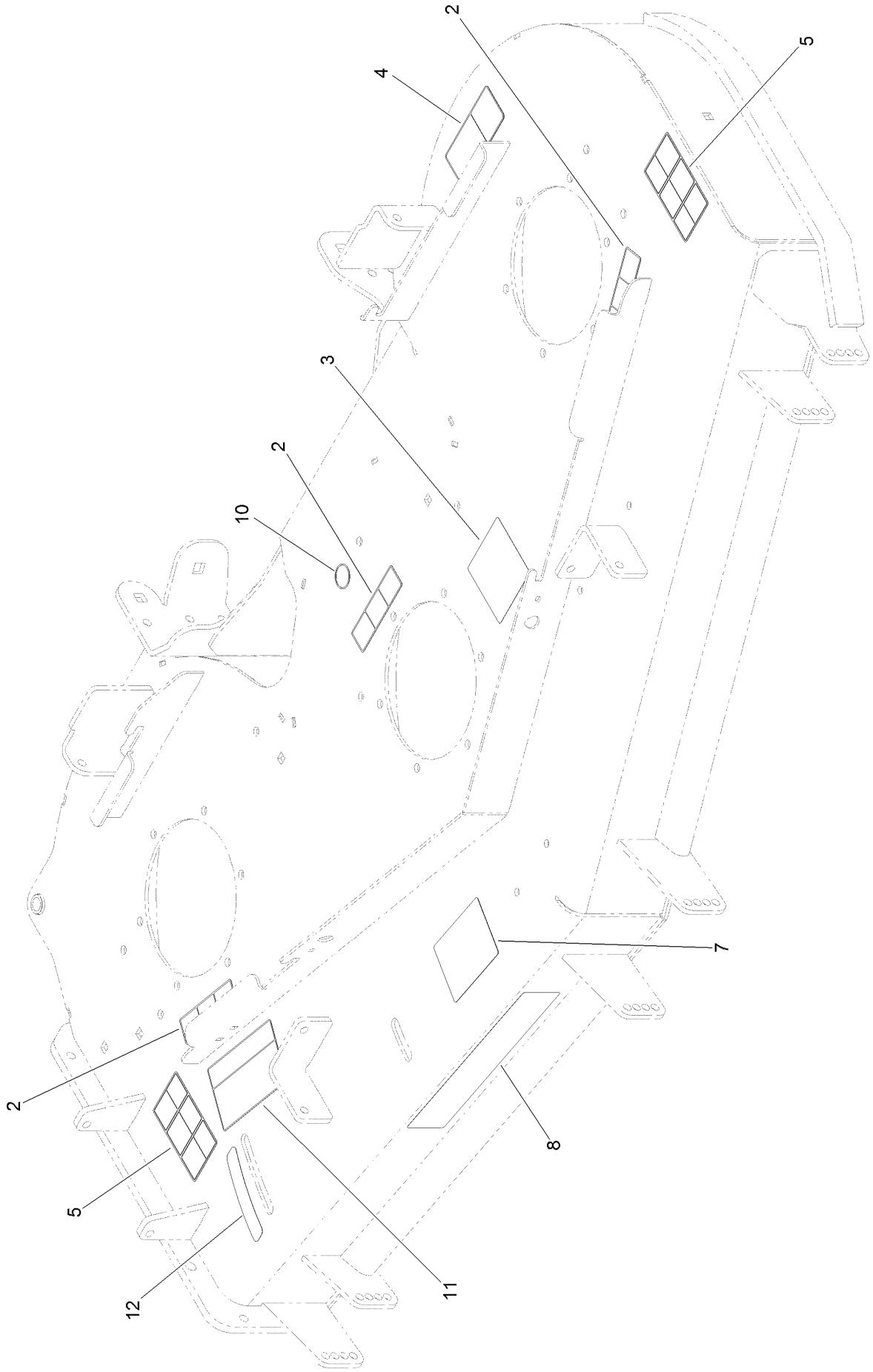

Deck Decal Assembly No. 114-5815 (continued)

Ref.	Part Number	Qty.	Description
2	112-9028	3	Decal-Missing, Cover
3	136-5508	1	Decal-Routing, Deck Belt
4	93-7818	1	Decal-Torque, Blade Bolt
5	117-3848	2	Decal-Danger
7	127-0326	1	Decal-Anti Scalp
8	107-1619	1	Decal
10	58-6520	1	Decal-Grease
11	110-2068	1	Decal-Adjustment, Baffle
12	110-2067	1	Decal-Setting, Baffle

Idler Arm Assembly

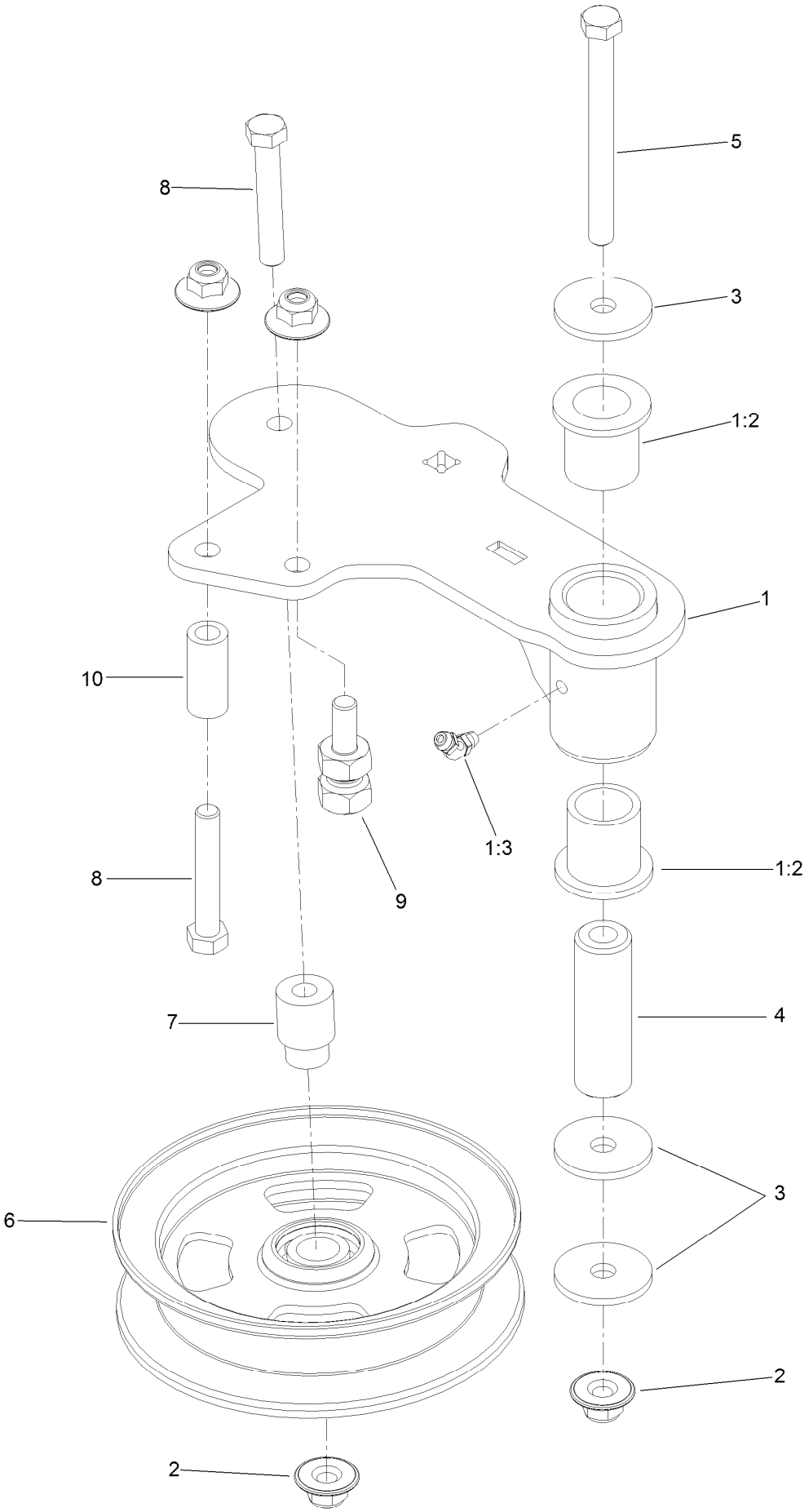

Idler Arm Assembly (continued)

Ref.	Part Number	Qty.	Description
1	114-5870	1	Idler Arm ASM
1:2	1-303514	2	Bearing-Flanged
1:3	1481	1	Fitting-Grease
2	109-6658	4	Nut-Flange, NI
3	1-213069	3	Washer
4	114-5848	1	Spacer-Plain
5	98-5961	1	Screw-HH
6	132-9425	1	Pulley-Idler, Flat
7	112-4212	1	Mount-Pulley
8	323-11	2	Screw-HH
9	132-4729	1	Anchor-Spring, Short
10	104-0151	1	Spacer

Spindle Assembly No. 127-0560

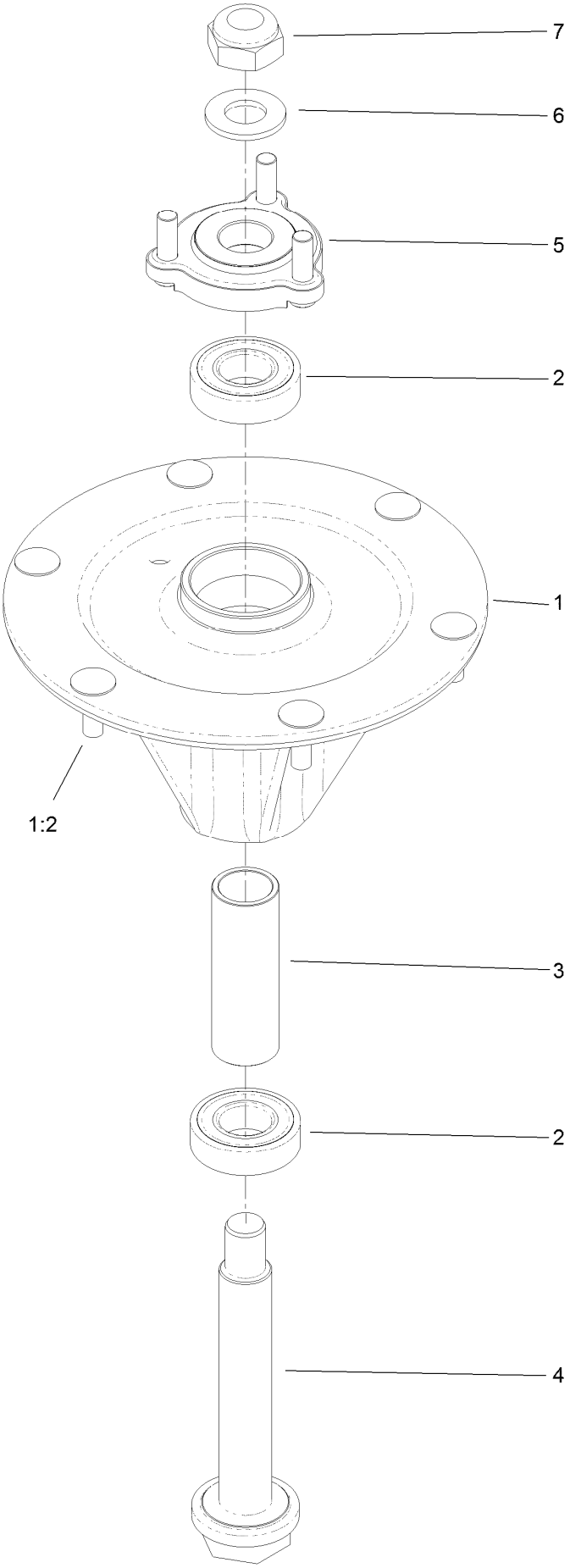

Spindle Assembly No. 127-0560 (continued)

Ref.	Part Number	Qty.	Description
1		1	Spindle Housing ASM W/Studs ●
1:2	114-8195	6	Bolt-Ribbed Neck
2	116-0720	2	Bearing-Ball
3	127-0554	1	Spacer-Bearing
4	127-0556	1	Shaft-Spindle, Ball Bearing
5	127-0557	1	Hub-Spindle (W/Studs)
6	92-5836	1	Washer
7	3296-67	1	Nut-Lock, NI

● Not serviced separately

Rubber Deflector Assembly No. 108-2792

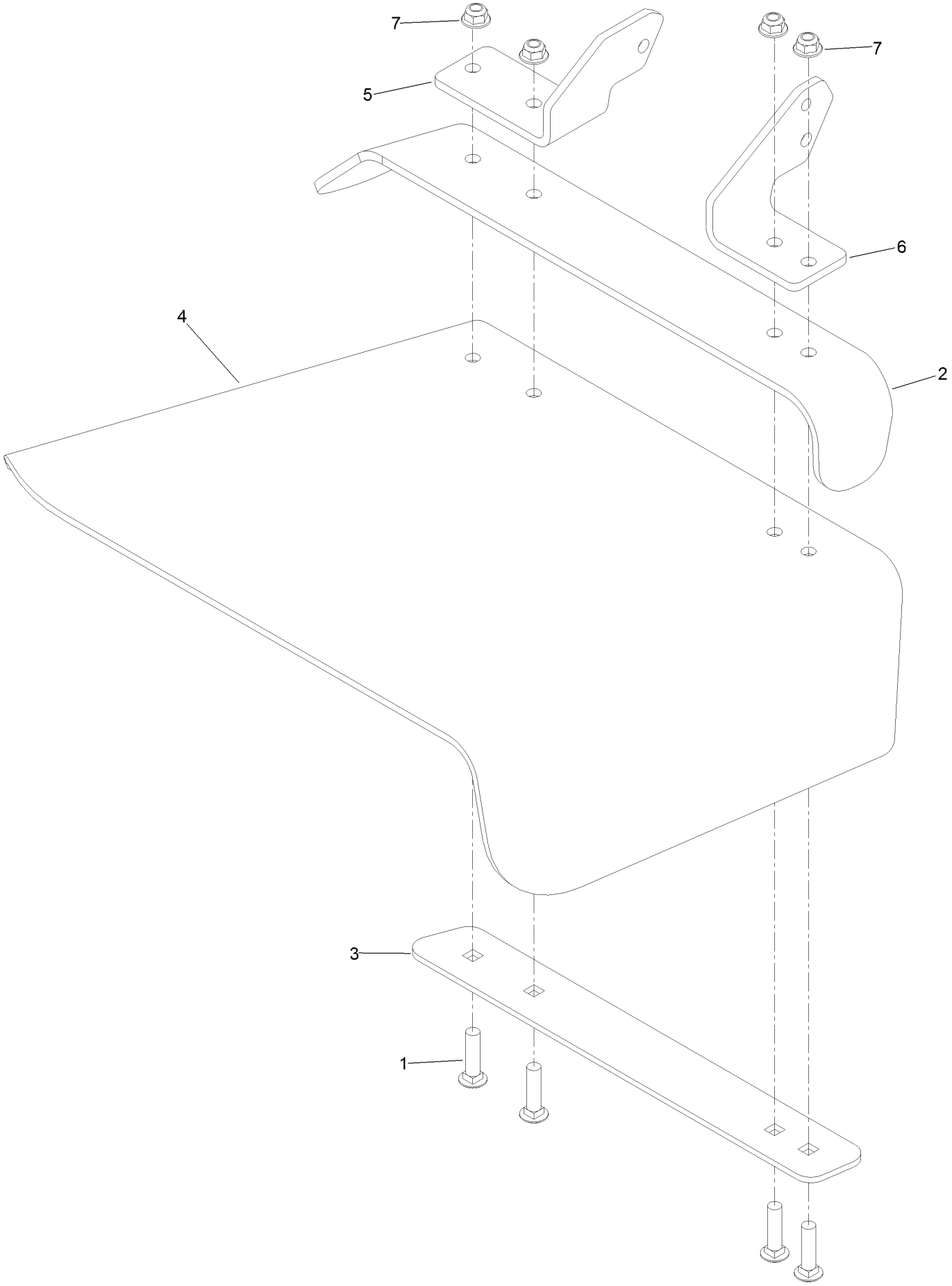

Rubber Deflector Assembly No. 108-2792 (continued)

Ref.	Part Number	Qty.	Description
1	3231-4	4	Screw-CARR
2	106-3246-01	1	Deflector
3	106-3248-03	1	Strap-Discharge
4	108-5029	1	Deflector-Rubber
5	108-4059-01	1	Plate-Hinge, Rear
6	106-3253-01	1	Plate-Hinge, Front
7	104-8301	4	Nut-HF, NI

Suspension Platform Assembly

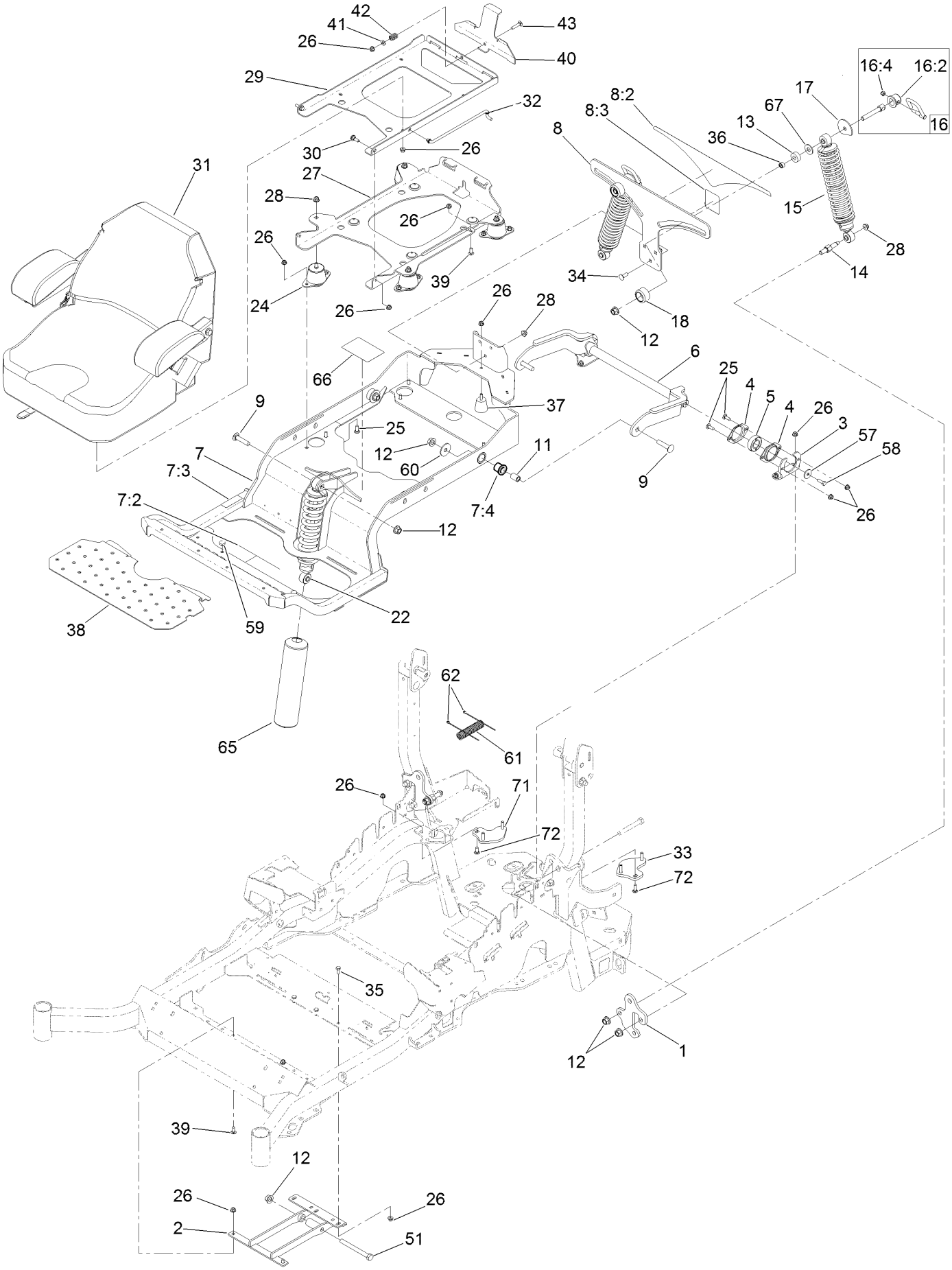

Suspension Platform Assembly (continued)

Ref.	Part Number	Qty.	Description
1	136-1674-01	2	Plate-Mount, Shock
2	131-6327-01	1	Mount-Lower
3	127-6759-03	2	Bracket-Bearing
4	127-6743	4	Housing-Bearing, Flange
5	1-653346	2	Bearing
6	127-6754-03	1	Arm-Trailing
7	132-5057	1	Subframe ASM
7:2	132-0871	1	Decal-Danger
7:3	115-9625	1	Decal-Brake, Parking
7:4	127-6745	2	Bushing-Flange
8	133-1808	1	Bracket-Mounting
8:2	132-5067	1	Decal-Adjustment, Ride
8:3	132-5063	1	Decal-Lock, Cam
9	127-6768	3	Screw-CARR
11	127-6751	2	Spacer-Aluminum
12	99-5107	8	Nut-Lock
13	131-8801	2	Spacer
14	131-6348	2	Bolt-Shoulder
15	133-1815	2	Shock/Spring ASM
16	131-8843	2	Cam Lock ASM
16:2	107-1644	1	Cap-Lock
16:4	119-4038	1	Nut-Hex
17	131-4646	2	Plate-Stop
18	131-4647	2	Knob-Front
22	136-8956	1	Shock-Spring
24	109-9034	4	Isolator-Seat
25	3230-10	12	Bolt-CARR
26	104-8300	32	Nut-HF, NI
27	131-6324-03	1	Plate-Support, ISO Seat
28	104-8301	9	Nut-HF, NI
29	116-3859-03	1	Plate-Frame, Seat
30	116-1297	2	Screw-Shoulder
31	116-0035	1	Seat-Standard
32	116-0070	1	Rod-Prop
33	127-6766	1	LH Plate ASM (W/Studs)
34	3231-22	3	Screw-CARR
35	322-3	3	Screw-HH
36	47-7270	2	Bearing-Needle
37	132-5058	1	Bumper-Rubber
38	132-5089-01	1	Floorpan
39	3230-23	3	Screw-CARR
40	132-5088-03	1	Plate-Latch,Seat
41	3256-23	1	Washer-Plain
42	107-3017	1	Spring-Compression
43	3230-4	1	Bolt-CARR
51	325-19	1	Screw-HH
57	105-3048	2	Washer-Flat
58	116-0648	2	Screw-HH, Thread Locking
59	1-513658	2	Bumper
60	86-1990	2	Washer-Thrust
61	131-8846	1	Cover-Hose
62	1-303287	2	Tie-Cable
65	132-5068	1	Cover-Shock
66	125-9383	1	Decal-Service Aid
67	3256-6	2	Washer-Flat
71	127-6765	1	RH Plate ASM (W/Studs)
72	3230-3	2	Screw-CARR

Seat Assembly No. 116-0035

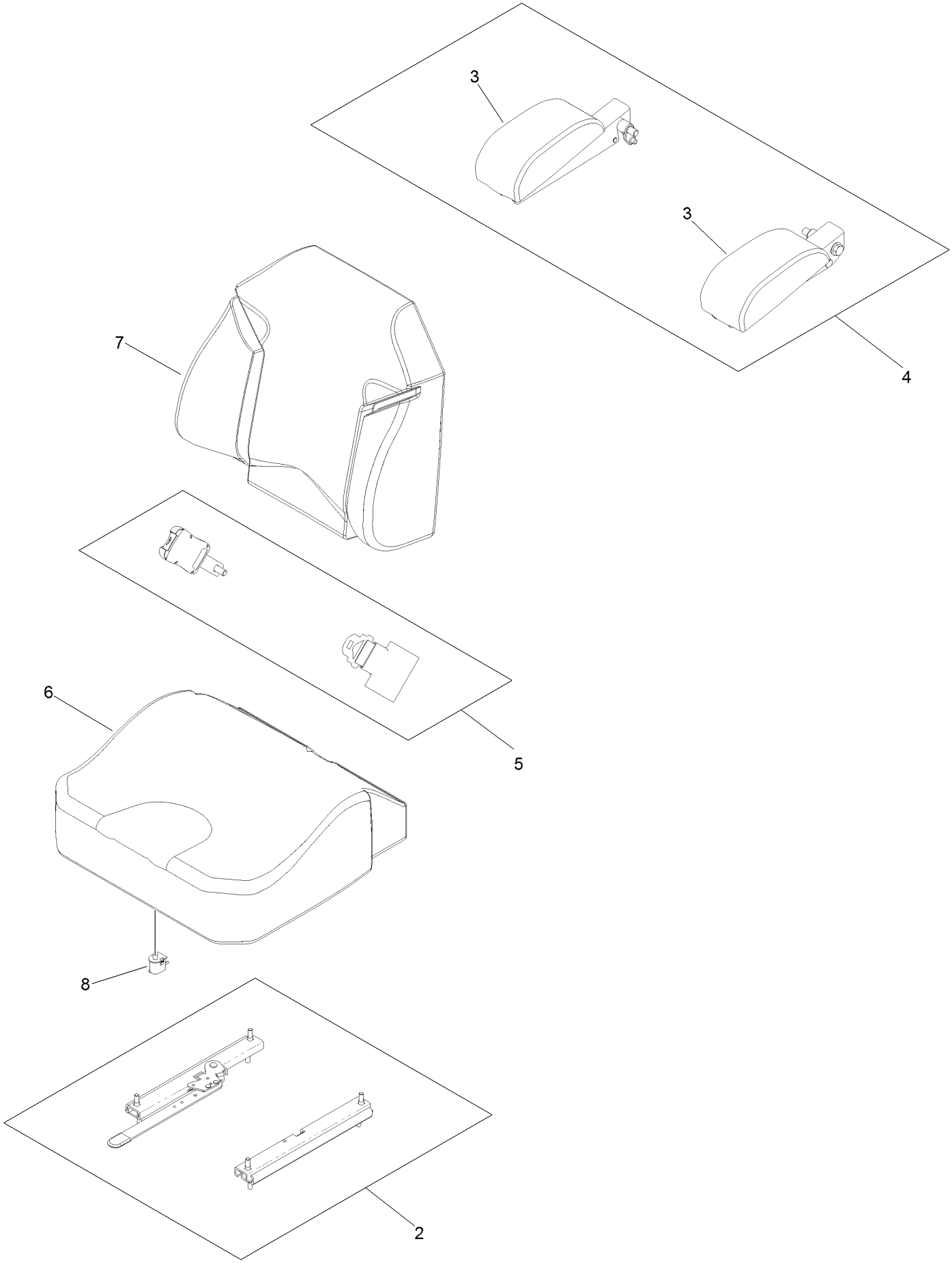

Seat Assembly No. 116-0035 (continued)

Ref.	Part Number	Qty.	Description
2	109-9801	1	Seat Track Set
3	109-9802	1	Arm Rest Pad Set
4	109-9803	1	Arm Rest Set
5	109-9805	1	Seat Belt Kit
6	109-9806	1	Cover-Cushion
7	109-9808	1	Cover-Back
8	82-2190	1	Switch-Bail

Suspension Platform Rubber Mat Assembly

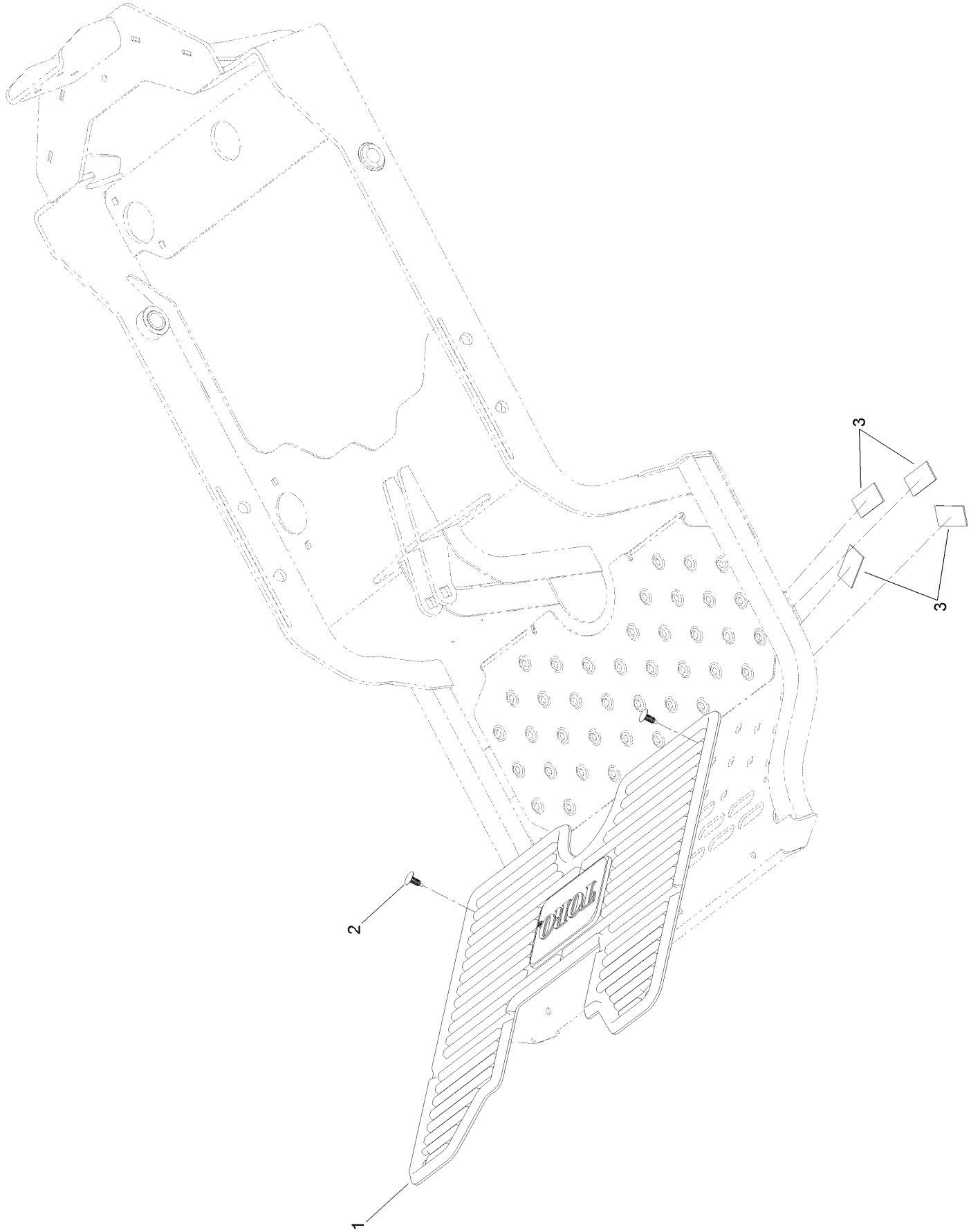

Suspension Platform Rubber Mat Assembly (continued)

Ref.	Part Number	Qty.	Description
1	133-1810	1	Mat-Floor
2	117-2382	2	Plug-Plastic
3	130-0733	4	Pad-Rubber

Attachments and Accessories

For 75936 Z Master Commercial 3000 Series Riding Mower with 60in TURBO FORCE Side Discharge Mower

Product Name	Model/Part
Blower and Drive Kit	78553
E-Z Vac Triple Bagging System	78563
E-Z Vac DFS Collection System	78567
Recycler Kit	115-7468
Operator Controlled Discharge Chute Kit	117-3600
Bimini Folding Shade Assembly	115-4510
Light Kit	116-1154
Hitch Kit	109-9487
Trash Holder Kit	TC26
Blade-Hi Flow, 20.5in	105-7718-03
Blade-Mid Flow, 20.5in	105-7715-03
Blade-Lo Flow, 20.5in	105-7716-03
Blade-Atomic, 20.5in	105-8777-03
Blade-Recycler, 20.5in	105-7777-03
6 Pack Blade, 20.5in Hi-Flow	108-1114
6 Pack Blade, 20.5in Mid-Flow	108-1123
6 Pack-Blade, 20.5in Lo Flow	108-1128
6 Pack-Blade, 20.5in Atomic	108-1115
6 Pack-Blade, 20.5in Recycler	110-0405
Roller Striper Kit	115-7470
Seat Cover W/arm rest	117-0095
Filter Minder Gauge	99-4664
Spark Arrestor Screen	75-6880
Anti-Scalp Kit (Trim Side)	108-4140
Turbo Baffle Kit	107-1634
Jack Kit	127-6666
MVP Belt and Blade Kit	127-1636
Toro Rider Over Seat Bag	490-7317
Toro Rider Arm Rest Bag	490-7320
Toro Rops Lock Kit	126-4064
Jack Mount Kit	127-6665
Toro Deluxe Rider Cover	490-7319
Hypr-Oil 500 (quart)	114-4713
Hypr-Oil 500 (gallon)	114-4714
Hypr-Oil 500-5 (5 gallon)	114-4715

Notes:

TORO®

Count on it.