Form No. 3414-182 Rev B

46cm Lawn Mower

Model No. 20943—Serial No. 317000001 and Up

Operator's Manual

Introduction

This rotary-blade, walk-behind lawn mower is intended to be used by residential homeowners. It is designed primarily for cutting grass on well-maintained lawns on residential properties. It is not designed for cutting brush or for agricultural uses.

Read this information carefully to learn how to operate and maintain your product properly and to avoid injury and product damage. You are responsible for operating the product properly and safely.

You may contact Toro directly at www.Toro.com for product and accessory information, help finding a dealer, or to register your product.

Whenever you need service, genuine Toro parts, or additional information, contact an Authorized Service Dealer or Toro Customer Service and have the model and serial numbers of your product ready. Figure 1 identifies the location of the model and serial numbers on the product.

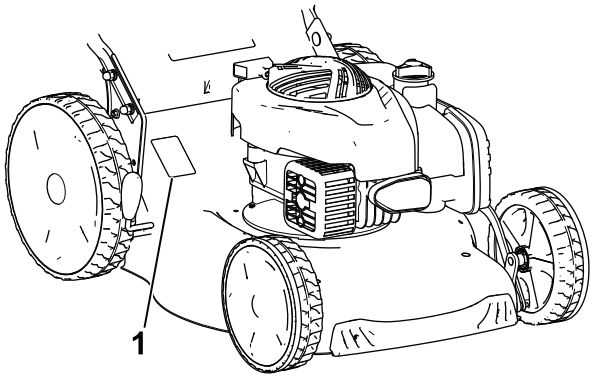

g189079

Figure 1

1. Model and serial number plate

Write the product model and serial numbers in the space below:

Model No. _____

Serial No. _____

This manual identifies potential hazards and has safety messages identified by the safety-alert symbol (Figure 2), which signals a hazard that may cause serious injury or death if you do not follow the recommended precautions.



g000502

Figure 2

1. Safety-alert symbol

This manual uses 2 words to highlight information. **Important** calls attention to special mechanical information and **Note** emphasizes general information worthy of special attention.

Net Torque: The gross or net torque of this engine was laboratory rated by the engine manufacturer in accordance with the Society of Automotive Engineers (SAE) J1940. As configured to meet safety, emission, and operating requirements, the actual engine torque on this class of mower will be significantly lower. Go to www.Toro.com to view specifications on your mower model.

Contents

Introduction 1
Safety 2
General Safety 2
Safety and Instructional Decals 3
Setup 4
1 Assembling the Handle 4
2 Installing the Recoil-Starter Rope in the Rope Guide 4
3 Filling the Engine with Oil 4
4 Assembling the Grass Bag 5
Product Overview 6
Specifications 6
Operation 6
Before Operation 6
Before Operation Safety 6
Filling the Fuel Tank 7
Checking the Engine-Oil Level 7
Adjusting the Cutting Height 8
During Operation 9
During Operating Safety 9
Starting the Engine 9
Using the Self-Propel Drive 10

© 2017—The Toro® Company
8111 Lyndale Avenue South
Bloomington, MN 55420

Register at www.Toro.com.

CE

Original Instructions (EN)
Printed in China
All Rights Reserved

3414-182 B

Shutting Off the Engine 10
Mulching the Grass Clippings 10
Bagging the Grass Clippings 10
Rear-Discharging the Grass Clippings 11
Operating Tips 11
After Operation 12
After Operating Safety 12
Cleaning under the Machine 12
Folding the Handle 13
Maintenance 14
Recommended Maintenance Schedule(s) 14
Maintenance Safety 14
Preparing for Maintenance 14
Replacing the Spark Plug 15
Servicing the Air Filter 15
Changing the Engine Oil 15
Replacing the Blade 16
Lubricating the Wheels 17
Storage 18
Preparing the Machine for Storage 18
Removing the Machine from Storage 18

Safety

This machine has been designed in accordance with EN ISO 5395:2013.

General Safety

This product is capable of amputating hands and feet and of throwing objects. Always follow all safety instructions to avoid serious personal injury.

Using this product for purposes other than its intended use could prove dangerous to you and bystanders.

- Read and understand the contents of this *Operator's Manual* before starting the engine.
- Do not put your hands or feet near moving components of the machine.
- Do not operate the machine without all guards and other safety protective devices in place and working on the machine.
- Keep clear of any discharge opening. Keep bystanders a safe distance away from the machine.
- Keep children out of the operating area. Never allow children to operate the machine.
- Stop the machine and shut off the engine before servicing, fueling, or unclogging the machine.

Improperly using or maintaining this machine can result in injury. To reduce the potential for injury, comply with these safety instructions and always pay attention to the safety-alert symbol, which means Caution, Warning, or Danger—personal safety instruction. Failure to comply with these instructions may result in personal injury or death.

You can find additional items of safety information in their respective sections throughout this manual.

Safety and Instructional Decals

Safety decals and instructions are easily visible to the operator and are located near any area of potential danger. Replace any decal that is damaged or missing.



decal134-0082

134-0082

1. Quick-wash port

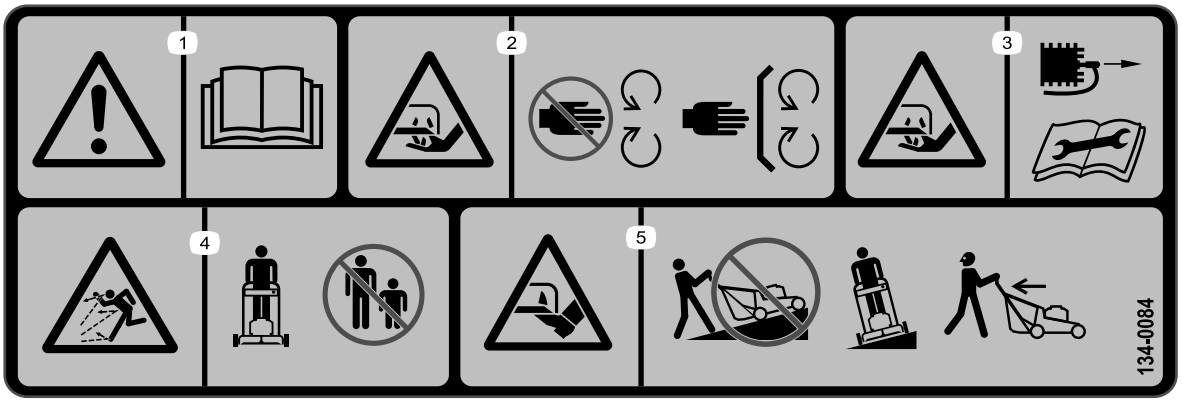

decal134-0084

134-0084

1. Warning—read the *Operator's Manual*.
2. Cutting hazard—keep away from moving parts; keep all guards and shields in place.
3. Cutting hazard—disconnect the spark plug and read the *Operator's Manual* before performing maintenance.
4. Thrown object hazard—keep bystanders away from the machine.
5. Cutting hazard—do not mow up a slope; always mow from side to side; ensure that the blade is stopped and the engine is shut off before picking up nearby debris; always look behind you when backing up with the machine.

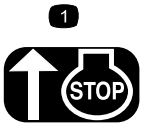

decalh295159

H295159

1. Engine stop

Setup

1

Assembling the Handle

No Parts Required

Procedure

1. Attach the lower handle to the mower housing with 4 bolts, 4 flat washers, 4 split washers, and 4 nuts (Figure 3).

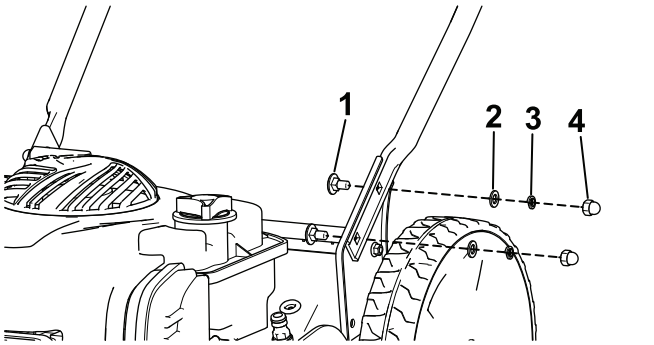

g189072

Figure 3

1. Bolt (4)
2. Flat washer (4)
3. Split washer (4)
4. Nut (4)

2. Attach the upper handle to the lower handle using 2 handle knobs, 2 curved washers, and 2 bolts. Tighten the handle knobs securely by hand (Figure 4).

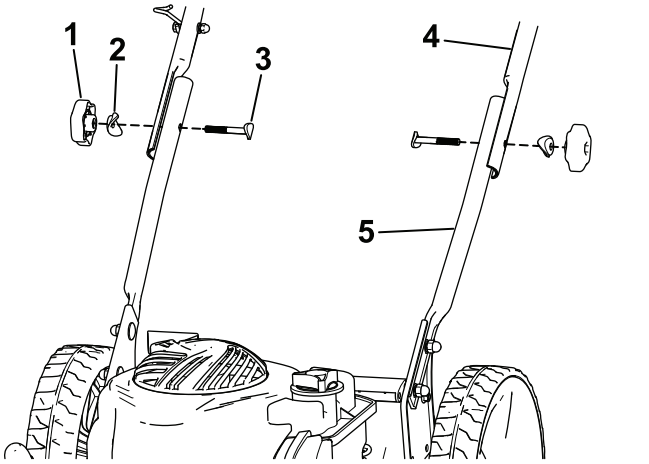

g189074

Figure 4

1. Handle knob (2)
2. Curved washer (2)
3. Bolt (2)
4. Upper handle
5. Lower handle

3. Insert the cables into the cable clamp and attach the cable clip to the handle as shown in Figure 5.

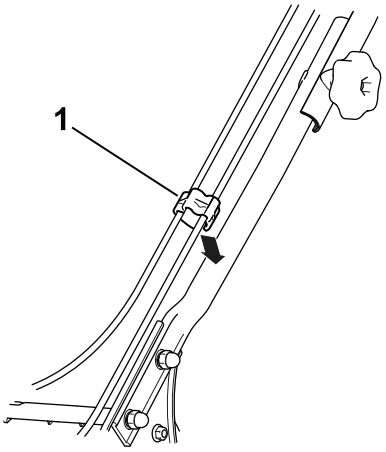

g189081

Figure 5

1. Cable clip

2

Installing the Recoil-Starter Rope in the Rope Guide

No Parts Required

Procedure

Important: **To start the engine safely and easily whenever you use the machine, install the recoil-starter rope in the rope guide.**

Hold the blade-control bar to the upper handle (Figure 9) and pull the recoil-starter rope through the rope guide on the handle (Figure 6).

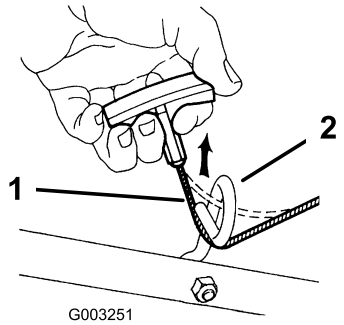

g003251

Figure 6

1. Recoil-starter rope
2. Rope guide

3

Filling the Engine with Oil

No Parts Required

Procedure

Important: **Your machine does not come with oil in the engine. Before starting the engine, fill the engine with oil.**

Engine oil capacity: 0.47 L

Oil viscosity: SAE 30 or SAE 10W-30 detergent oil

API service classification: SJ or higher

1. Move the machine to a level surface.
2. Remove the dipstick by rotating the cap counterclockwise and pulling it out (Figure 7).

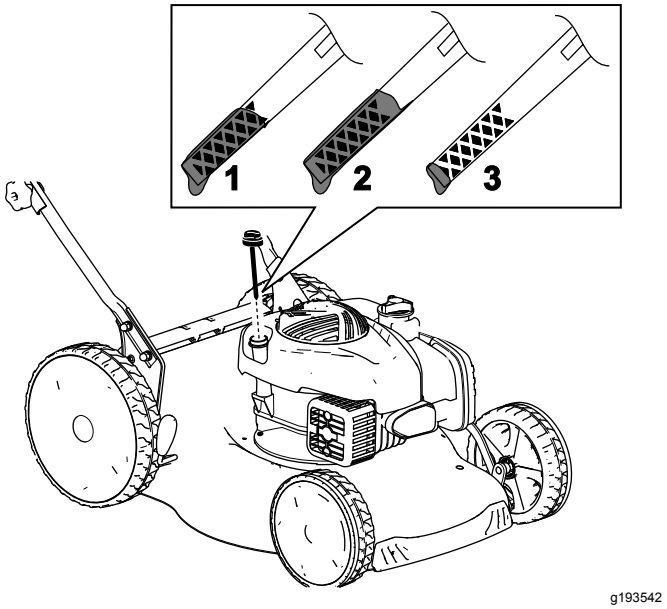

g193542

Figure 7

1. Full
2. High
3. Low

3. Carefully pour about 3/4 of the engine capacity of oil into the oil-fill tube.
4. Wait about 3 minutes for the oil to settle in the engine.
5. Wipe the dipstick clean with a clean cloth.
6. Insert the dipstick into the oil-fill tube, then remove the dipstick.
7. Read the oil level on the dipstick (Figure 7).
   - If the oil level on the dipstick is too low, carefully pour a small amount of oil into the oil-fill tube, wait 3 minutes, and repeat steps 3 through 5 until the oil on the dipstick is at the correct level.
   - If the oil level on the dipstick is too high, drain the excess oil until the oil on the dipstick is at the correct level; refer to Changing the Engine Oil (page 15).

   Important: **If the oil level in the engine is too low or too high and you run the engine, you may damage the engine.**
8. Install the dipstick securely.

4

Assembling the Grass Bag

No Parts Required

Procedure

1. Slide the grass-bag frame into the grass bag (Figure 8).
2. Position all 6 grass-bag clips over the grass-bag frame (Figure 8).

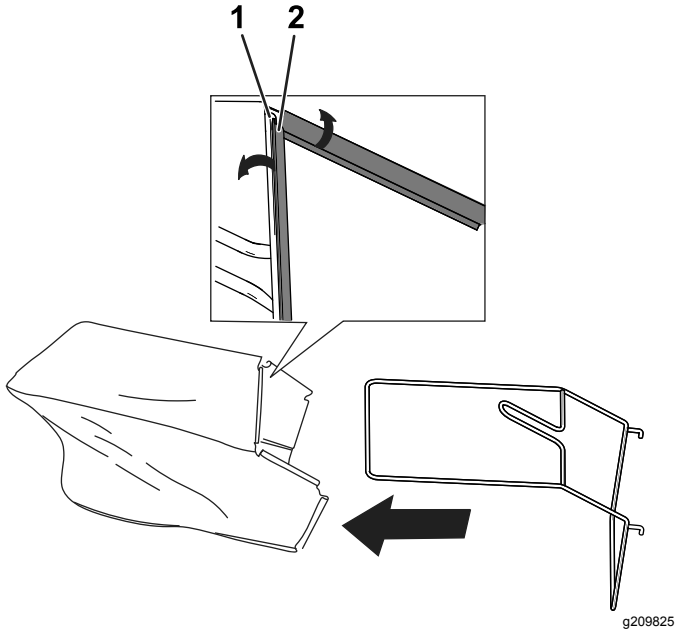

g209825

Figure 8

1. Grass-bag frame
2. Grass-bag clip

Product Overview

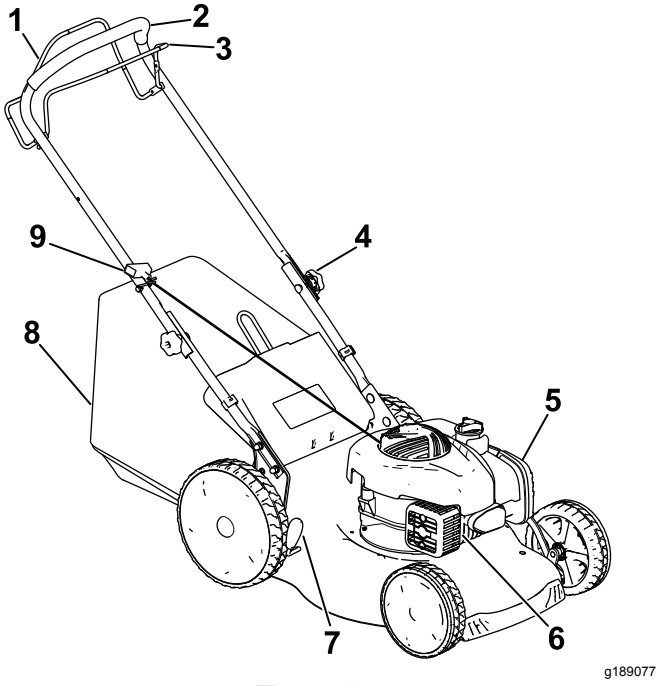

Figure 9

1. Self-propel bar
2. Handle
3. Blade-control bar
4. Handle knob
5. Air filter
6. Spark plug
7. Cutting-height lever
8. Grass bag
9. Recoil-start handle

Specifications

Model	Weight	Length	Width	Cutting Width	Height
20943	30 kg	148 cm	55 cm	46 cm	105 cm

Operation

Before Operation

Before Operation Safety

General Safety

- Become familiar with the safe operation of the equipment, operator controls, and safety signs.
- Check that all guards and safety devices, such as doors and/or grass catchers, are in place and working properly.
- Always inspect the machine to ensure that the blade, blade bolts, and cutting assembly are not worn or damaged.
- Inspect the area where you will use the machine and remove all objects that the machine could throw.
- Adjusting the cutting height may bring you into contact with the moving blade, causing serious injury.
  - Shut off the engine and wait for all moving parts to stop.
  - Do not put your fingers under the housing when adjusting the cutting height.

Fuel Safety

⚠ DANGER

Fuel is extremely flammable and highly explosive. A fire or explosion from fuel can burn you and others and can damage property.

- **To prevent a static charge from igniting the fuel, place the container and/or machine directly on the ground before filling, not in a vehicle or on an object.**
- **Fill the fuel tank outdoors, in an open area, when the engine is cold. Wipe up any fuel that spills.**
- **Do not handle fuel when smoking or around an open flame or sparks.**
- **Store fuel in an approved container and keep it out of the reach of children.**

⚠ WARNING

Fuel is harmful or fatal if swallowed. Long-term exposure to vapors can cause serious injury and illness.

- **Avoid prolonged breathing of vapors.**
- **Keep your hands and face away from the nozzle and the fuel-tank opening.**
- **Keep fuel away from your eyes and skin.**

Filling the Fuel Tank

- For best results, use only clean, fresh, unleaded gasoline with an octane rating of 87 or higher ((R+M)/2 rating method).
- **ETHANOL:** Gasoline with up to 10% ethanol (gasohol) or 15% MTBE (methyl tertiary butyl ether) by volume is acceptable. Ethanol and MTBE are not the same. Gasoline with 15% ethanol (E15) by volume is not approved for use. **Never use** gasoline that contains more than 10% ethanol by volume, such as E15 (contains 15% ethanol), E20 (contains 20% ethanol), or E85 (contains up to 85% ethanol). Using unapproved gasoline may cause performance problems and/or engine damage. Using unapproved gasoline is not covered under the product warranty.
- **Do not** use gasoline containing methanol.
- **Do not** store fuel either in the fuel tank or in fuel containers over the winter unless fuel stabilizer has been added to the fuel.
- **Do not** add oil to gasoline.

Important: **To reduce starting problems, add fuel stabilizer to the fuel all season, mixing it with gasoline less than 30 days old.**

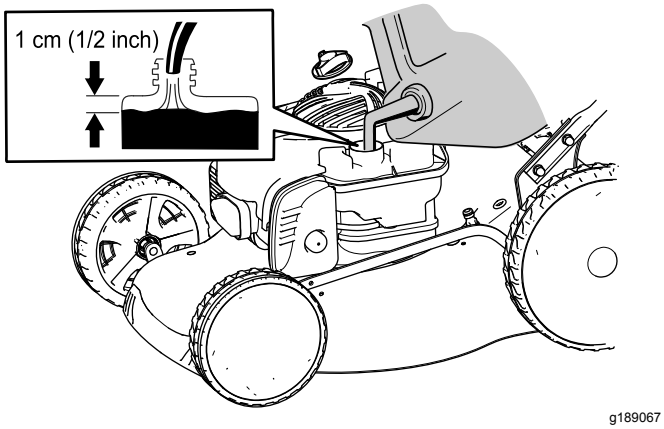

g189067

Figure 10

Checking the Engine-Oil Level

Service Interval: Before each use or daily

1. Move the machine to a level surface.
2. Remove the dipstick by rotating the cap counterclockwise and pulling it out (Figure 11).

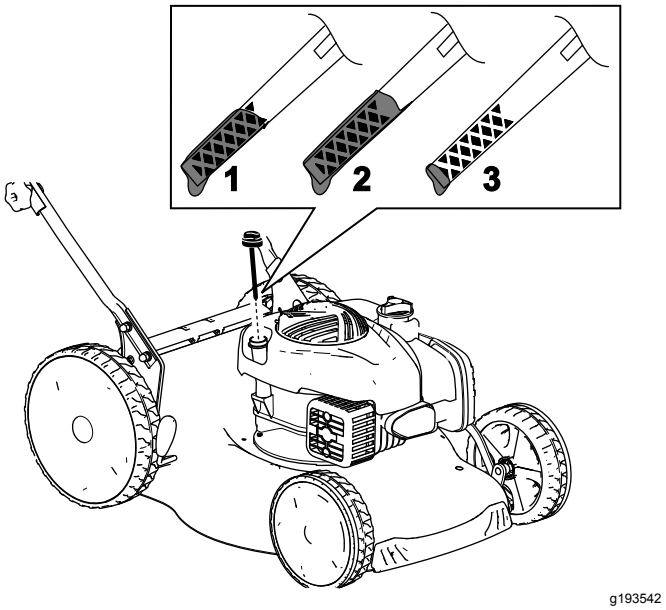

g193542

Figure 11

1. Full
2. High
3. Low

3. Wipe the dipstick clean with a clean cloth.
4. Insert the dipstick into the oil-fill tube, then remove the dipstick.
5. Read the oil level on the dipstick (Figure 11).
   - If the oil level on the dipstick is too low, slowly pour a small amount of oil into the oil-fill tube, wait 3 minutes, and then repeat steps 3 through 5 until the oil on the dipstick is at the correct level.
   - If the oil level on the dipstick is too high, drain the excess oil until the oil on the dipstick is at the correct level. To drain the excess oil, refer to Changing the Engine Oil (page 15).

   Important: **If the oil level in the crankcase is too low or too high and you run the engine, you may damage the engine.**
6. Install the dipstick into the oil-fill tube securely.

Adjusting the Cutting Height

⚠ WARNING

Adjusting the cutting height may bring you into contact with the moving blade, causing serious injury.

- **Shut off the engine and wait for all moving parts to stop.**
- **Do not put your fingers under the housing when adjusting the cutting height.**

There are 7 cutting-height settings from 25 to 70 mm. Adjust the cutting height as desired. Set the front wheels to the same height as the rear wheels.

To adjust the cutting height, disengage the lever (Figure 12), raise or lower the machine, and then engage the lever.

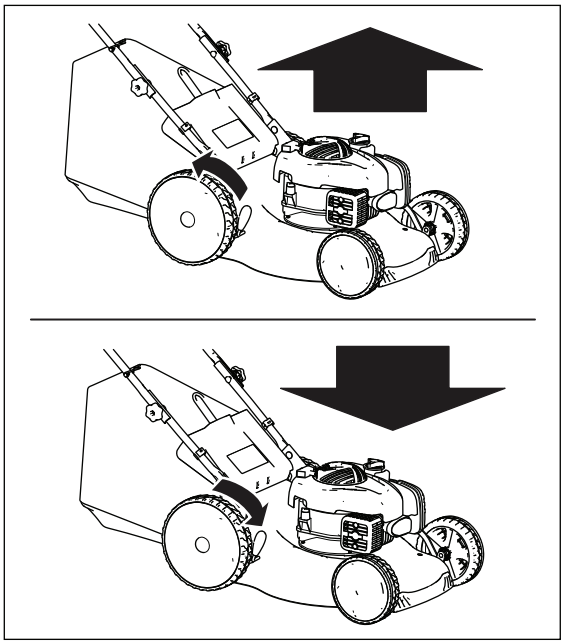

g189069

Figure 12

The cutting height positions are shown in Figure 13.

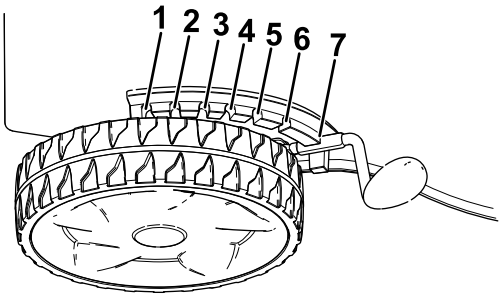

g208642

Figure 13

1. 70.0 mm
2. 62.5 mm
3. 55.0 mm
4. 47.5 mm
5. 40.0 mm
6. 32.5 mm
7. 25.0 mm

During Operation

During Operating Safety

General Safety

- Wear appropriate clothing, including eye protection; slip-resistant, substantial footwear; and hearing protection. Tie back long hair, secure loose clothing, and do not wear jewelry.
- Do not operate the machine while ill, tired, or under the influence of alcohol or drugs.
- The blade is sharp; contacting the blade can result in serious personal injury. Shut off the engine and wait for all moving parts to stop before leaving the operating position.
- When you release the blade-control bar, the engine should shut off and the blade should stop within 3 seconds. If not, stop using your machine immediately and contact an Authorized Service Dealer.
- Operate the machine only in good visibility and appropriate weather conditions. Do not operate the machine when there is the risk of lightning.
- Wet grass or leaves can cause serious injury if you slip and contact the blade. Avoid mowing in wet conditions.
- Use extreme care when approaching blind corners, shrubs, trees, or other objects that may block your view.
- Watch for holes, ruts, bumps, rocks, or other hidden objects. Uneven terrain could cause a slip-and-fall accident.
- Stop the machine and inspect the blade after striking an object or if there is an abnormal vibration in the machine. Make all necessary repairs before resuming operation.
- Before leaving the operating position, shut off the engine, and wait for all moving parts to stop.
- If the engine has been running the muffler will be hot and can severely burn you. Keep away from the hot muffler.
- Check the grass catcher components and the discharge guard frequently and replace them with the manufacturer's recommended parts when necessary.

Slope Safety

- Mow across the face of slopes; never up and down. Use extreme caution when changing direction on slopes.
- Do not mow on excessively steep slopes. Poor footing could cause a slip-and-fall accident.
- Mow with caution near drop-offs, ditches, or embankments.

Starting the Engine

Important: **This machine comes with a rubber boot over the end of the spark plug. Ensure that the metal loop on the end of the spark-plug wire (inside the rubber boot) is fastened securely on the metal tip on the spark plug.**

1. Press the primer bulb 3 to 5 times (Figure 14).

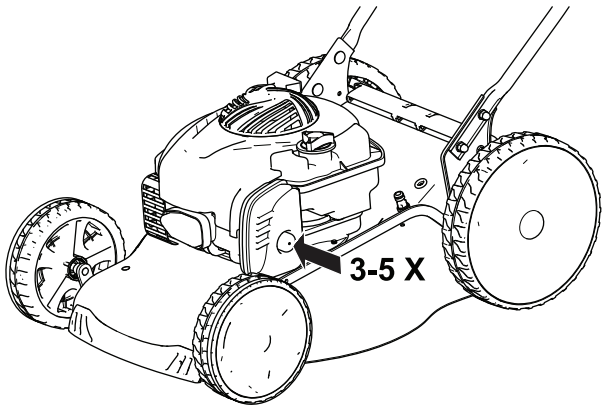

g189076

Figure 14

2. Hold the blade-control bar against the handle (Figure 15A).

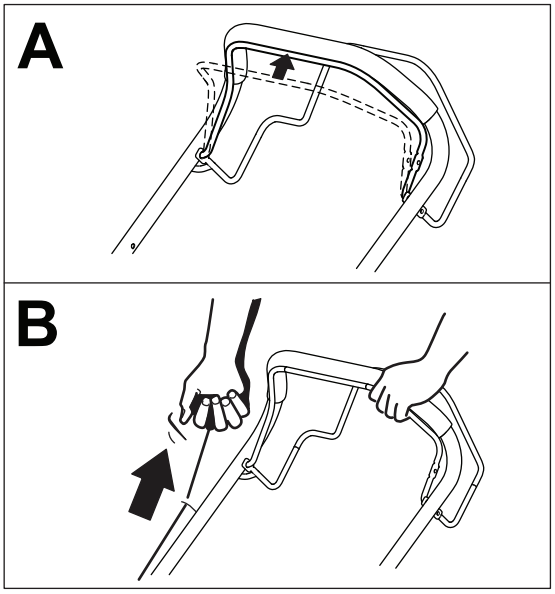

g188344

Figure 15

1. Blade-control bar

3. Pull the recoil-start handle lightly until you feel resistance, then pull it sharply (Figure 15B).

When the engine starts, allow the rope to return to the handle slowly.

Using the Self-Propel Drive

To operate the self-propel drive, squeeze the self-propel-drive bar (Figure 16) toward the handle and hold it.

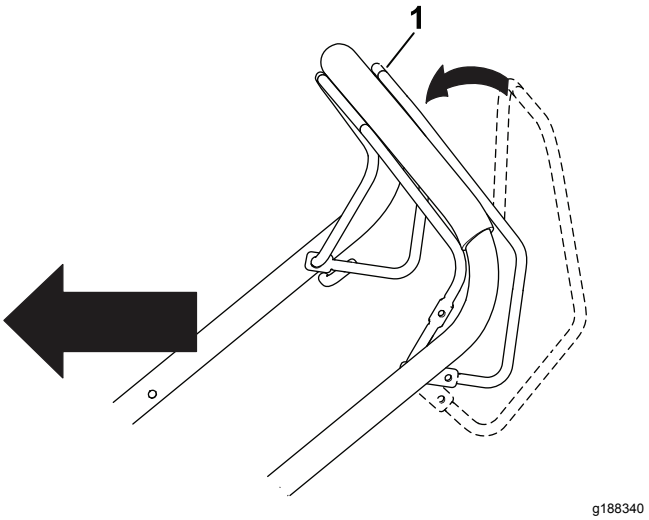

Figure 16

1. Self-propel-drive bar

Note: The machine has a fixed maximum speed of approximately 3.0 km/h.

To disengage the self-propel drive, release the self-propel-drive bar.

Shutting Off the Engine

To shut off the engine, release the blade-control bar.

Note: Disconnect and ground the spark-plug wire before you leave the machine to prevent someone from accidently starting the engine.

Mulching the Grass Clippings

⚠ WARNING

The blade is sharp; contacting the blade can result in serious personal injury.

- **Ensure that the mulching plug is in place before you mulch the clippings.**
- **Never engage the blade without the mulching plug in place, the grass bag installed, or the rear door down.**

If the grass bag is on the machine, remove it; refer to Removing the Grass Bag (page 11).

1. Raise and hold up the rear door (Figure 17).

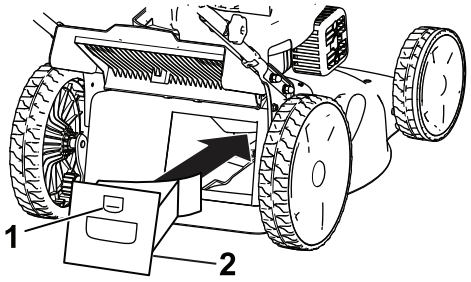

Figure 17

1. Latch
2. Mulching plug

2. Install the mulching plug into the housing and lock the plug into the opening in the housing (Figure 17).
3. Lower the rear door.

Bagging the Grass Clippings

Use the grass bag when you want to collect grass and leaf clippings from the lawn.

⚠ WARNING

A worn grass bag could allow small stones and other similar debris to be thrown toward you or bystanders, resulting in serious personal injury or death.

Check the grass bag frequently. If it is damaged, install a new Toro replacement bag.

⚠ WARNING

The blade is sharp; contacting the blade can result in serious personal injury.

- **Ensure that the grass bag is in place before you bag the clippings.**
- **Never engage the blade without the mulching plug in place, the grass bag installed, or the rear door down.**

⚠ WARNING

The machine can throw grass clippings and other objects through an open discharge tunnel. Objects thrown with enough force could cause serious personal injury or death to the you or a bystander.

Never open the door on the discharge tunnel when the engine is running.

If the mulching wedge is installed on the machine, raise the rear door, remove the mulching wedge, and lower the rear door.

Installing the Grass Bag

1. If necessary, assemble the grass bag; refer to 4 Assembling the Grass Bag (page 5).
2. Raise and hold up the rear door.

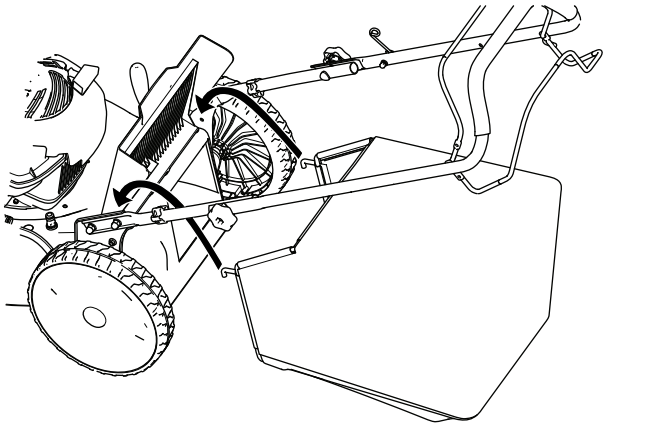

g189071

Figure 18

3. Install the grass bag, ensuring that the pins on the bag rest in the notches on the handle (Figure 18).
4. Lower the rear door.

Removing the Grass Bag

1. Raise and hold up the rear door (Figure 18).
2. Remove the bag.
3. Lower the rear door.

Rear-Discharging the Grass Clippings

1. If the grass bag is on the machine, remove it before rear-discharging the clippings; refer to Removing the Grass Bag (page 11)
2. If the mulching wedge is installed on the machine, raise the rear door, remove the mulching wedge, and lower the rear door.

⚠ WARNING

The blade is sharp; contacting the blade can result in serious personal injury.

- **Ensure that the rear door is down before rear-discharging the grass clippings.**
- **Never engage the blade without the mulching plug in place, the grass bag installed, or the rear door down.**

Operating Tips

General Mowing Tips

- Inspect the area where you will use the machine and remove all objects that the machine could throw.
- Avoid striking solid objects with the blade. Never deliberately mow over any object.
- If the machine strikes an object or starts to vibrate, immediately shut off the engine, disconnect the wire from the spark plug, and examine the machine for damage.
- For best performance, install a new blade before the cutting season begins.
- Replace the blade when necessary with a Toro replacement blade.

Cutting Grass

- Cut only about a third of the grass blade at a time. Do not cut below 51 mm (2 inches) unless the grass is sparse or it is late fall when grass growth begins to slow down.
- When cutting grass over 15 cm (6 inches) tall, mow at the highest cutting height setting and walk slower; then mow again at a lower setting for the best lawn appearance. If the grass is too long, the machine may plug and cause the engine to stall.
- Wet grass and leaves tend to clump on the yard and can cause the machine to plug or the engine to stall. Avoid mowing in wet conditions.
- Be aware of a potential fire hazard in very dry conditions, follow all local fire warnings, and keep the machine free of dry grass and leaf debris.
- Alternate the mowing direction. This helps disperse the clippings over the lawn for even fertilization.
- If the finished lawn appearance is unsatisfactory, try 1 or more of the following:
  - Replace the blade or have it sharpened.
  - Walk at a slower pace while mowing.
  - Raise the cutting height on your machine.

– Cut the grass more frequently.
– Overlap cutting swaths instead of cutting a full swath with each pass.

Cutting Leaves

- After cutting the lawn, ensure that half of the lawn shows through the cut leaf cover. You may need to make more than a single pass over the leaves.
- If there are more than 13 cm of leaves on the lawn, mow at a higher cutting height and then again at the desired cutting height.
- Slow down your mowing speed if the machine does not cut the leaves finely enough.

After Operation

After Operating Safety

General Safety

- Clean grass and debris from the machine to help prevent fires. Clean up oil or fuel spills.
- Allow the engine to cool before storing the machine in any enclosure.
- Never store the machine or fuel container where there is an open flame, spark, or pilot light, such as on a water heater or on other appliances.

Hauling Safety

- Use care when loading or unloading the machine.
- Secure the machine from rolling.

Cleaning under the Machine

Service Interval: Before each use or daily

⚠ WARNING

The machine may dislodge material from under the machine.

- **Wear eye protection.**
- **Stay in the operating position (behind the handle) when the engine is running.**
- **Do not allow bystanders in the area.**

For best results, clean the machine soon after you have completed mowing.

1. Move the machine onto a flat paved surface.
2. Shut off the engine and wait for all moving parts to stop before leaving the operating position.
3. Lower the machine to its lowest cutting-height setting; refer to Adjusting the Cutting Height (page 8).
4. Wash out the area under the rear door where the clippings go from the housing to the grass bag.

   Note: Wash out the area with the bag-on-demand in both the fully forward and fully rearward positions.
5. Attach a garden hose that is connected to a water supply to the washout port (Figure 19).

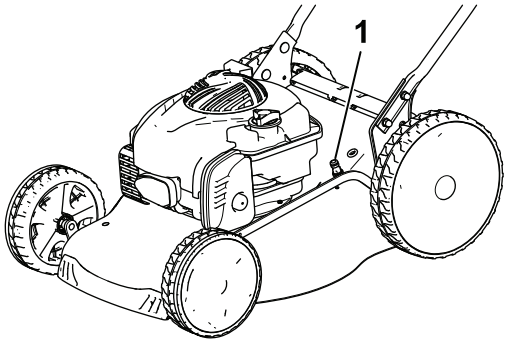

g189078

Figure 19

1. Washout port

6. Turn the water on.
7. Start the engine and run it until there are no more clippings that come out from under the machine.
8. Shut off the engine.
9. Shut off the water and disconnect the garden hose from the machine.
10. Start the engine and run it for a few minutes to dry the underside of the machine to prevent it from rusting.
11. Allow the engine to cool before storing the machine in an enclosed area.

Folding the Handle

⚠ WARNING

Folding or unfolding the handle improperly can damage the cables, causing an unsafe operating condition.

- **Do not damage the cables when folding or unfolding the handle.**
- **If a cable is damaged, contact an Authorized Service Dealer.**

1. Loosen the 2 handle knobs (Figure 20A).

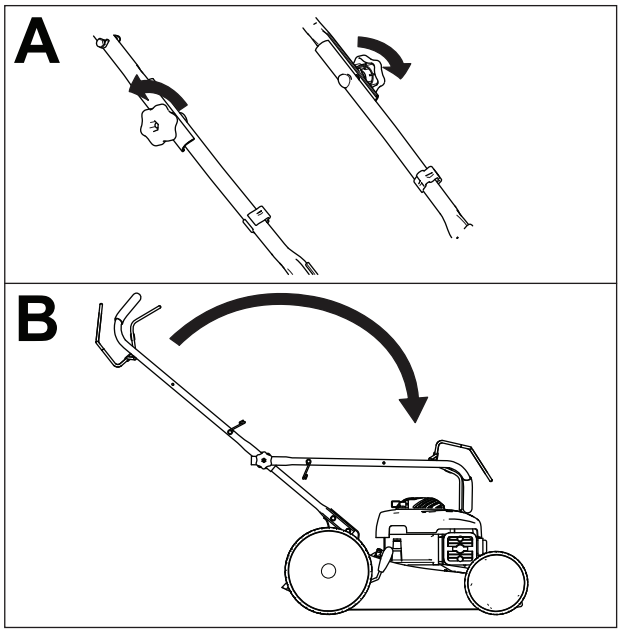

g189068

Figure 20

2. Fold the handle by rotating it forward (Figure 20B).

Maintenance

Note: Determine the left and right sides of the machine from the normal operating position.

Recommended Maintenance Schedule(s)

Maintenance Service Interval	Maintenance Procedure
Before each use or daily	• Check the engine-oil level. • Clean grass clippings and dirt from under the machine.
Every 25 hours	• Replace the air filter; replace it more frequently in dusty operating conditions.
Every 100 hours	• Replace the spark plug.
Yearly	• Replace the blade or have it sharpened (more frequently if the edge dulls quickly). • Clean the air-cooling system; clean it more frequently in dusty operating conditions. Refer to your engine manual.
Yearly or before storage	• Lubricate the wheels. • Empty the fuel tank before repairs as directed and before yearly storage.

Maintenance Safety

- Disconnect the spark-plug wire from the spark plug before performing any maintenance procedure.
- Wear gloves and eye protection when servicing the machine.
- The blade is sharp; contacting the blade can result in serious personal injury. Wear gloves when servicing the blade.
- Never tamper with safety devices. Check their proper operation regularly.
- Tipping the machine may cause the fuel to leak. Fuel is flammable and explosive, and can cause personal injury. Run the engine dry to remove the fuel with a hand pump; never siphon the fuel.

Preparing for Maintenance

1. Shut off the engine and wait for all moving parts to stop.
2. Disconnect the spark-plug wire from the spark plug (Figure 21).

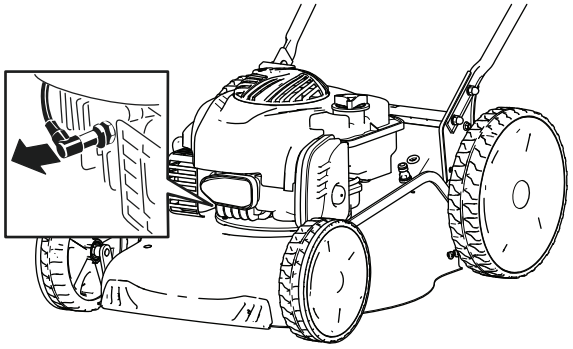

g189080

Figure 21

3. After performing the maintenance procedure(s), connect the spark-plug wire to the spark plug.

Important: **Before tipping the machine to change the oil or replace the blade, allow the fuel tank to run dry through normal usage. If you must tip the machine prior to running out of fuel, use a hand fuel pump to remove the fuel. Always tip the machine onto its side, with the dipstick down.**

⚠ WARNING

Tipping the machine may cause the fuel to leak. Fuel is flammable and explosive and can cause personal injury.

Run the engine dry or remove the fuel with a hand pump; never siphon.

Replacing the Spark Plug

Service Interval: Every 100 hours

Use a Champion QC12YC spark plug or equivalent.

1. Shut off the engine and wait for all moving parts to stop.
2. Disconnect the wire from the spark plug.
3. Clean around the spark plug.
4. Remove the spark plug from the engine.

   Important: **Replace a cracked, fouled, or dirty spark plug. Do not clean the electrodes because grit entering the engine can damage the engine.**
5. Set the gap on the new plug to 0.51 mm as shown in Figure 22.

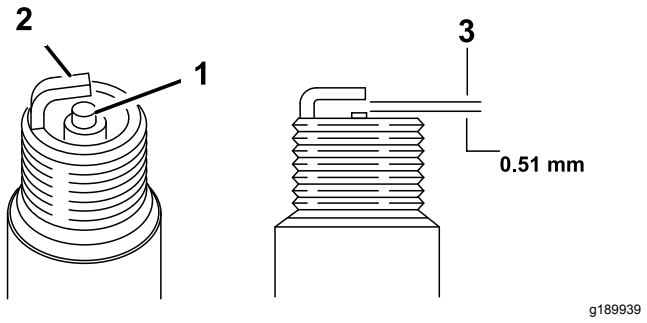

Figure 22

1. Center electrode
2. Side electrode
3. Air gap (not to scale)

6. Install the spark plug
7. Tighten the plug to 20 N·m.
8. Connect the wire to the spark plug.

Servicing the Air Filter

Service Interval: Every 25 hours

1. Unclip the top of the air-filter cover (Figure 23).

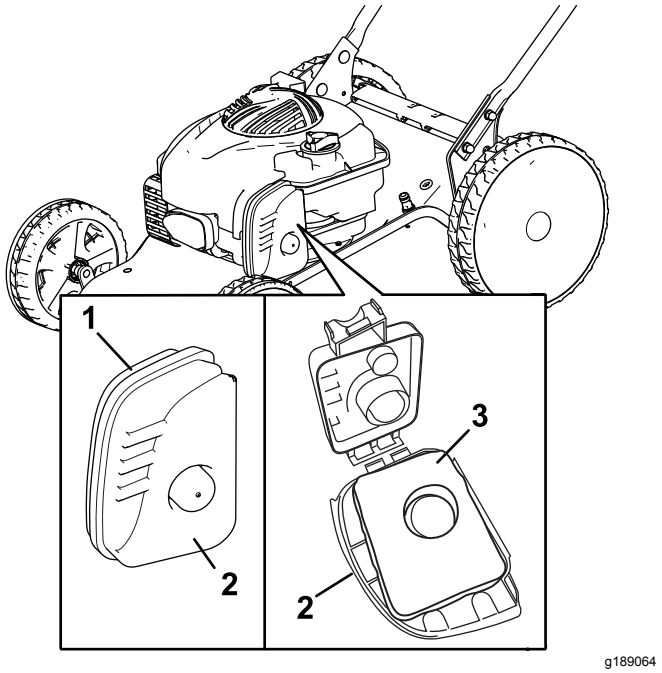

Figure 23

1. Air filter
2. Air-filter cover
3. Air-filter element (foam)

2. Remove the air-filter cover (Figure 23).
3. Remove the air-filter element.
4. Wash the air-filter element in soapy water.

   Important: **Do not use gasoline to clean the air-filter element.**
5. Air dry the air-filter element.
6. Add a few drops of engine oil on the air-filter element and squeeze it tightly to remove any excess oil.
7. Install the air-filter element and air-filter cover.

Changing the Engine Oil

Changing the engine oil is not required, but if you desire to change the oil, use the following procedure.

Engine oil capacity: 0.47 L

Oil viscosity: SAE 30 or SAE 10W-30 detergent oil

API service classification: SJ or higher

Note: Run the engine a few minutes before changing the oil to warm it. Warm oil flows better and carries more contaminants.

1. Move the machine to a level surface.
2. Refer to Preparing for Maintenance (page 14).
3. Remove the dipstick by rotating the cap counterclockwise and pulling it out (Figure 24).

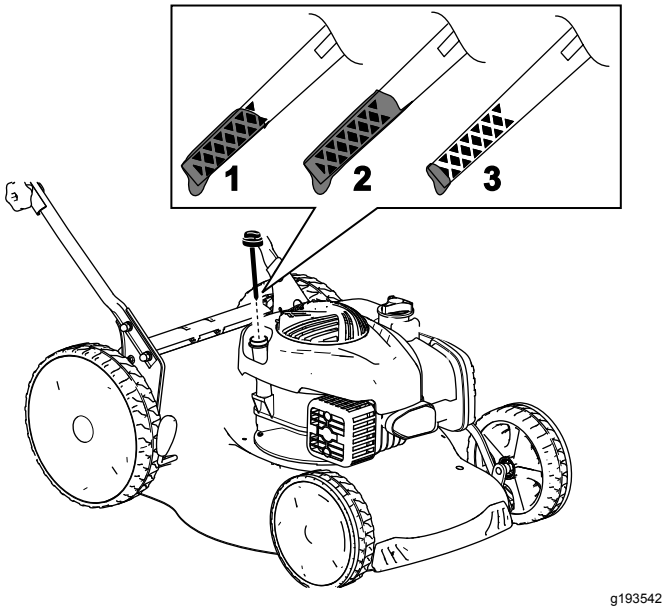

g193542

Figure 24

1. Full
2. High
3. Low

4. Tip the machine onto its side (so that the air filter is up) to drain the used oil from the oil-fill tube (Figure 25).

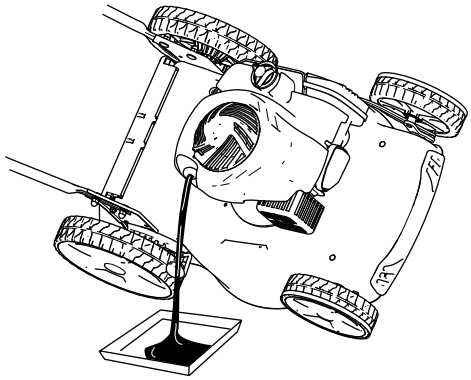

g189065

Figure 25

5. After draining the used oil, return the machine to the operating position.
6. Carefully pour about 3/4 of the engine capacity of oil into the oil-fill tube.
7. Wait about 3 minutes for the oil to settle in the engine.
8. Wipe the dipstick clean with a clean cloth.
9. Insert the dipstick into the oil-fill tube, then remove the dipstick.
10. Read the oil level on the dipstick (Figure 25).
    - If the oil level on the dipstick is too low, carefully pour a small amount of oil into the oil-fill tube, wait 3 minutes, and repeat steps 8 through 10 until the oil on the dipstick is at the correct level.
    - If the oil level on the dipstick is too high, drain the excess oil until the oil on the dipstick is at the correct level.

    Important: **If the oil level in the engine is too low or too high and you run the engine, you may damage the engine.**
11. Install the dipstick securely.
12. Recycle the used oil properly.

Replacing the Blade

Service Interval: Yearly

Important: ***You will need a torque wrench to install the blade properly.*** **If you do not have a torque wrench or are uncomfortable performing this procedure, contact an Authorized Service Dealer.**

Examine the blade whenever you run out of fuel. If the blade is damaged or cracked, replace it immediately. If the blade edge is dull or nicked, have it sharpened and balanced, or replace it.

⚠ WARNING

The blade is sharp; contacting the blade can result in serious personal injury.

Wear gloves when servicing the blade.

1. Refer to Preparing for Maintenance (page 14).
2. Tip the machine onto its side with the dipstick down.
3. Use a block of wood to hold the blade steady (Figure 26).

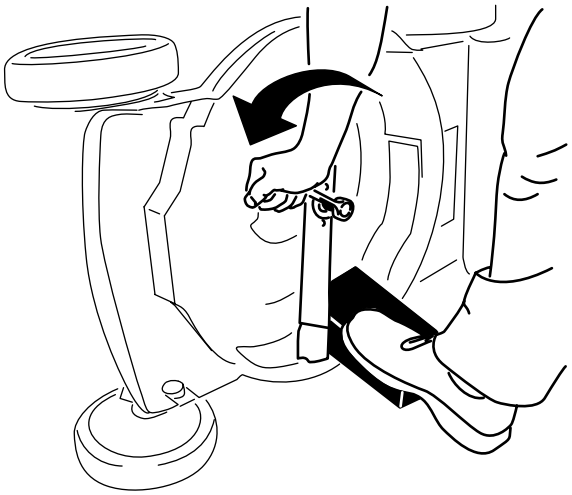

g188339

Figure 26

4. Remove the blade, saving all mounting hardware (Figure 26).
5. Install the new blade and all mounting hardware (Figure 27).

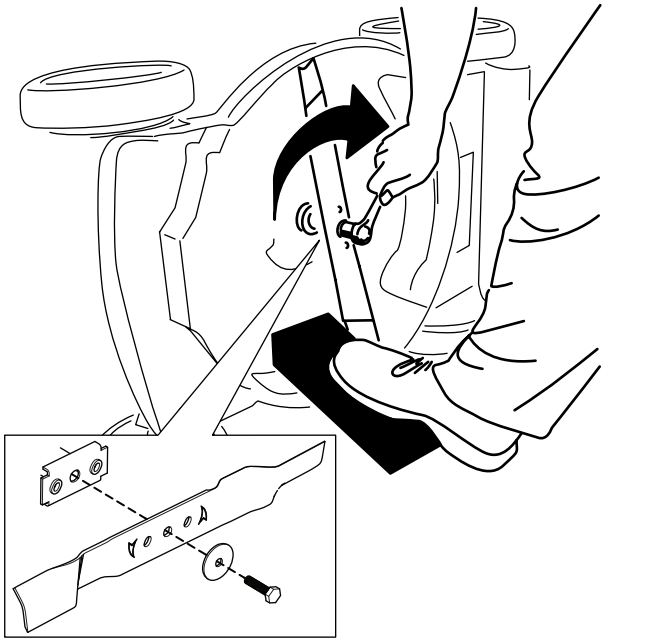

g188330

Figure 27

Important: **Position the curved ends of the blade to point toward the mower housing.**

6. Use a torque wrench to tighten the blade bolt to 45 N·m.

Important: **A bolt torqued to 45 N·m is very tight. While holding the blade with a block of wood, put your weight behind the ratchet or wrench and tighten the bolt securely. This bolt is very difficult to overtighten.**

Lubricating the Wheels

Service Interval: Yearly or before storage

Apply a few drops of No. 2 lithium grease to the ball bearings on each of the wheels (Figure 28).

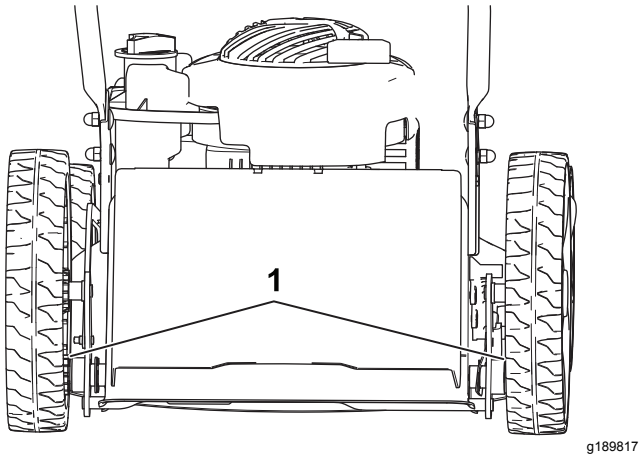

g189817

Figure 28

1. Ball bearings

Storage

Store the machine in a cool, clean, dry place.

Preparing the Machine for Storage

1. On the last refueling of the year, add fuel stabilizer (such as Toro Premium Fuel Treatment) to the fuel.
2. Dispose of any unused fuel properly. Recycle it according to local codes, or use it in your automobile.

   Note: Old fuel in the fuel tank is the leading cause of hard starting. Do not store fuel without stabilizer more than 30 days, and do not store stabilized fuel more than 90 days.
3. Run the machine until the engine shuts off from running out of fuel.
4. Start the engine again.
5. Allow the engine to run until it shuts off. When you can no longer start the engine, it is sufficiently dry.
6. Disconnect the wire from the spark plug.
7. Remove the spark plug, add 30 ml of engine oil through the spark-plug hole, and pull the starter rope slowly several times to distribute oil throughout the cylinder to prevent cylinder corrosion during the off-season.
8. Loosely install the spark plug.
9. Tighten all nuts, bolts, and screws.

Removing the Machine from Storage

1. Check and tighten all fasteners.
2. Remove the spark plug and spin the engine rapidly by pulling the recoil-start handle to blow the excess oil from the cylinder.
3. Install the spark plug and tighten it with a torque wrench to 20 N·m.
4. Perform any maintenance procedures; refer to Preparing for Maintenance (page 14).
5. Check the engine-oil level; refer to Checking the Engine-Oil Level (page 7).
6. Fill the fuel tank with fresh fuel; refer to Filling the Fuel Tank (page 7).
7. Connect the wire to the spark plug.

European Privacy Notice

The Information Toro Collects
Toro Warranty Company (Toro) respects your privacy. In order to process your warranty claim and contact you in the event of a product recall, we ask you to share certain personal information with us, either directly or through your local Toro company or dealer.

The Toro warranty system is hosted on servers located within the United States where privacy law may not provide the same protection as applies in your country.

BY SHARING YOUR PERSONAL INFORMATION WITH US, YOU ARE CONSENTING TO THE PROCESSING OF YOUR PERSONAL INFORMATION AS DESCRIBED IN THIS PRIVACY NOTICE.

The Way Toro Uses Information
Toro may use your personal information to process warranty claims, to contact you in the event of a product recall and for any other purpose which we tell you about. Toro may share your information with Toro's affiliates, dealers or other business partners in connection with any of these activities. We will not sell your personal information to any other company. We reserve the right to disclose personal information in order to comply with applicable laws and with requests by the appropriate authorities, to operate our systems properly or for our own protection or that of other users.

Retention of your Personal Information
We will keep your personal information as long as we need it for the purposes for which it was originally collected or for other legitimate purposes (such as regulatory compliance), or as required by applicable law.

Toro's Commitment to Security of Your Personal Information
We take reasonable precautions in order to protect the security of your personal information. We also take steps to maintain the accuracy and current status of personal information.

Access and Correction of your Personal Information
If you would like to review or correct your personal information, please contact us by email at legal@toro.com.

Australian Consumer Law

Australian customers will find details relating to the Australian Consumer Law either inside the box or at your local Toro Dealer.

The Toro Warranty and The Toro GTS Starting Guarantee

Conditions and Products Covered

The Toro Company and its affiliate, Toro Warranty Company, pursuant to an agreement between them, jointly promise to repair the Toro Product listed below if defective in materials or workmanship or if the Toro GTS (Guaranteed to Start) engine will not start on the first or second pull, provided the routine maintenance required in the *Operator's Manual* have been performed.

The following time periods apply from the original date of purchase:

Products	Warranty Period
Walk Power Mowers	
• Cast Deck	5 years Residential Use[2] 90 Days Commercial Use
—Engine	5 years GTS Guarantee, Residential Use[3]
—Battery	2 years
• Steel Deck	2 years Residential Use[2] 30 Days Commercial Use
—Engine	2 years GTS Guarantee, Residential Use[3]
TimeMaster Mowers	3 years Residential Use[2] 90 Days Commercial Use
• Engine	3 years GTS Guarantee, Residential Use[3]
• Battery	2 years
Electric Hand Held Products and Electric Walk Power Mowers	2 years Residential Use[2] No Warranty for Commercial Use
All Ride-On Units Below	
• Engine	See engine manufacturer's warranty[4]
• Battery	2 years Residential Use[2]
• Attachments	2 years Residential Use[2]
DH Lawn & Garden Tractors	2 years Residential Use[2] 30 Days Commercial Use
TimeCutter	3 years Residential Use[2] 30 Days Commercial Use
• Engine	3 years Residential Use[2] 2 years or 300 hours Commercial Use [5]
TimeCutter HD	3 years or 300 hours [5]
• Engine	3 years or 300 hours Commercial Use [5]

[1]Original Purchaser means the person who originally purchased the Toro Product.

[2]Residential use means use of the product on the same lot as your home. Use at more than one location is considered commercial use and the commercial use warranty would apply.

[3]The Toro GTS Starting Guarantee does not apply when the product is used commercially.

[4]Some engines used on Toro Products are warranted by the engine manufacturer.

[5]Whichever occurs first.

Warranty may be denied if the hour meter is disconnected, altered, or shows signs of being tampered with.

Owner Responsibilities

You must maintain your Toro Product by following the maintenance procedures described in the *Operator's Manual*. Such routine maintenance, whether performed by a dealer or by you, is at your expense.

Instructions for Obtaining Warranty Service

If you think that your Toro Product contains a defect in materials or workmanship, follow this procedure:

1. Contact your seller to arrange service of the product. If for any reason it is impossible for you to contact your seller, you may contact any Toro Authorized Distributor to arrange service. Visit http://www.toro.com/en-us/locator/pages/default.aspx to locate a Toro distributor in your area.
2. Bring the product and your proof of purchase (sales receipt) to the servicing outlet. If for any reason you are dissatisfied with the servicing outlet's analysis or with the assistance provided, contact us at:

   Toro Warranty Company
   Toro Customer Care Department, RLC Division
   8111 Lyndale Avenue South
   Bloomington, MN 55420-1196
   001–952–948–4707

Items and Conditions Not Covered

There is no other express warranty except for special emission system coverage and engine warranty coverage on some products. This express warranty does not cover the following:

- Cost of regular maintenance service or parts, such as filters, fuel, lubricants, oil changes, spark plugs, air filters, blade sharpening or worn blades, cable/linkage adjustments, or brake and clutch adjustments
- Components failing due to normal wear
- Any product or part which has been altered, misused, neglected, requires replacement, or repair due to accidents or lack of proper maintenance
- Pickup and delivery charges
- Repairs or attempted repairs by anyone other than an Authorized Toro Service Dealer
- Repairs necessary due to failure to follow recommended fuel procedure (consult *Operator's Manual* for more details)
  - Removing contaminants from the fuel system is not covered
  - Use of old fuel (more than one month old) or fuel which contains more than 10% ethanol or more that 15% MTBE
  - Failure to drain the fuel system prior to any period of non-use over one month
- Repairs or adjustments to correct starting difficulties due to the following:
  - Failure to follow proper maintenance procedures or recommended fuel procedure
  - Rotary mower blade striking an object
- Special operational conditions where starting may require more than two pulls:
  - First time starts after extended period of non-use over three months or seasonal storage
  - Cool temperature starts such as those found in early spring and late autumn
  - Improper starting procedures - if you are having difficulty starting your unit, please check the *Operator's Manual* to ensure that you are using the correct starting procedures. This can save an unnecessary visit to an Authorized Toro Service Dealer.

General Conditions

The purchaser is covered by the national laws of each country. The rights to which the purchaser is entitled with the support of these laws are not restricted by this warranty.