Form No. 3412-342 Rev B

TORO®

Count on it.

Operator's Manual

Log Splitter

Model No. 22618—Serial No. 400000000 and Up

Model No. 22618HD—Serial No. 400000000 and Up

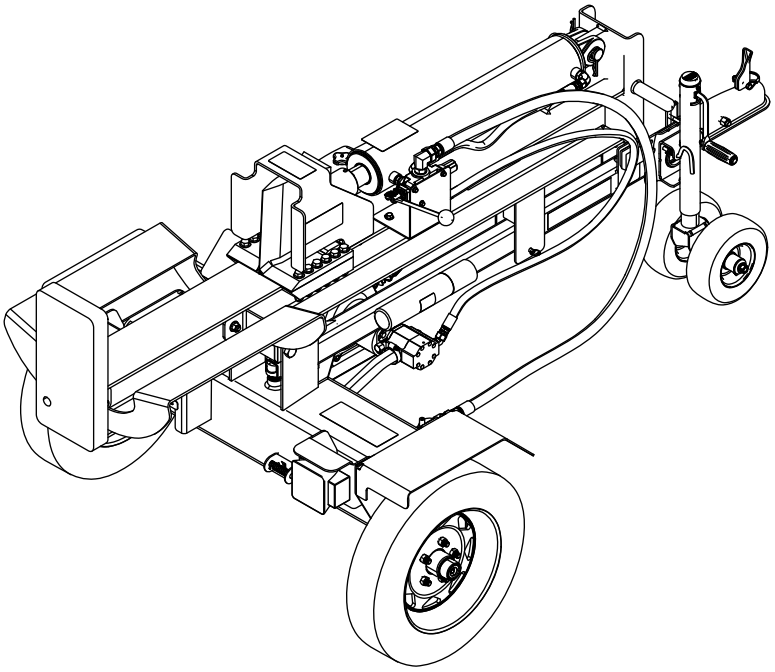

Register at www.Toro.com.
Original Instructions (EN)

3412-342 B

⚠ WARNING

CALIFORNIA
Proposition 65 Warning

This product contains a chemical or chemicals known to the State of California to cause cancer, birth defects, or reproductive harm.

The engine exhaust from this product contains chemicals known to the State of California to cause cancer, birth defects, or other reproductive harm.

Use of this product may cause exposure to chemicals known to the State of California to cause cancer, birth defects, or other reproductive harm.

It is a violation of California Public Resource Code Section 4442 or 4443 to use or operate the engine on any forest-covered, brush-covered, or grass-covered land unless the engine is equipped with a spark arrester, as defined in Section 4442, maintained in effective working order or the engine is constructed, equipped, and maintained for the prevention of fire.

The enclosed engine owner's manual is supplied for information regarding the US Environmental Protection Agency (EPA) and the California Emission Control Regulation of emission systems, maintenance, and warranty. Replacements may be ordered through the engine manufacturer.

Tire Information—The DOT tire information is located on the side of each tire. This information gives load and speed ratings. Replacement tires should have the same or better ratings; refer to Specifications (page 7) to ensure that the tires on your machine meet or exceed the weight requirements of your machine.

Introduction

This machine is designed to split wood logs cut to a size to fit within the machine splitting wedge opening. It can operate in the horizontal or vertical position. It is not intended to split rock, metal, or any materials other than wood. The log splitter can be towed behind a vehicle equipped with an appropriate ball hitch.

Read this information carefully to learn how to operate and maintain your product properly and to avoid injury and product damage. You are responsible for operating the product properly and safely.

You may contact Toro directly at www.Toro.com for product safety and operation training materials, accessory information, help finding a dealer, or to register your product.

Whenever you need service, genuine Toro parts, or additional information, contact an Authorized Service Dealer or Toro Customer Service and have the model and serial numbers of your product ready. Figure 1 identifies the location of the model and serial numbers on the product. Write the numbers in the space provided.

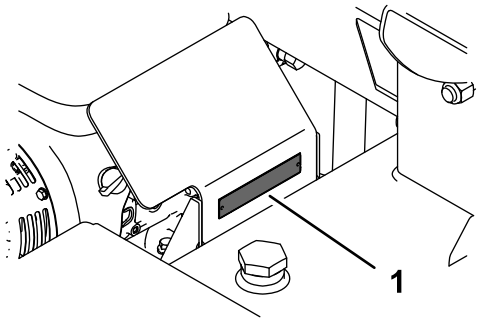

g206664

Figure 1

1. Model and serial number location

Model No. _____

Serial No. _____

This manual identifies potential hazards and has safety messages identified by the safety-alert symbol (Figure 2), which signals a hazard that may cause serious injury or death if you do not follow the recommended precautions.

g000502

Figure 2

1. Safety-alert symbol

This manual uses 2 words to highlight information. **Important** calls attention to special mechanical information and **Note** emphasizes general information worthy of special attention.

Contents

Safety 3
General Safety 3
Safety and Instructional Decals 4
Product Overview 6
Controls 6
Engine Controls 6

© 2017—The Toro® Company
8111 Lyndale Avenue South
Bloomington, MN 55420

Contact us at www.Toro.com.
Printed in the USA
All Rights Reserved

Specifications 7
Before Operation 8
Before Operation Safety 8
Adding Fuel 8
Preparing to Use the Machine 9
During Operation 9
During Operation Safety 9
Starting the Engine 10
Shutting off the Engine 10
Changing the Rail Position 11
Splitting a Log 11
After Operation 12
After Operation Safety 12
Towing Safety 12
Towing the Machine 13
Maintenance 16
Recommended Maintenance Schedule(s) 16
Pre-Maintenance Procedures 16
Maintenance and Storage Safety 16
Disconnecting the Spark-plug Wire 17
Lubrication 17
Greasing the Rail 17
Greasing the Wheel Bearings 18
Engine Maintenance 18
Engine Safety 18
Servicing the Air Cleaner 18
Servicing the Engine Oil 20
Servicing the Spark Plug 21
Fuel System Maintenance 22
Cleaning the Fuel-Sediment Cup 22
Drive System Maintenance 23
Checking the Tire Pressure 23
Checking the Wheel Lug Nuts 24
Hydraulic System Maintenance 24
Hydraulic System Safety 24
Hydraulic Fluid Specifications 24
Checking the Hydraulic-Fluid Level 24
Replacing the Hydraulic Filter 25
Replacing the Hydraulic Fluid 26
Storage 26
Troubleshooting 27

Safety

Improper use or maintenance by the operator or owner can result in injury. To reduce the potential for injury, comply with these safety instructions and always pay attention to the safety-alert symbol ⚠, which means: *Caution*, *Warning*, or *Danger*—personal safety instruction. Failure to comply with the instruction may result in personal injury or death.

General Safety

This product is capable of amputating hands and feet and of throwing objects. Always follow all safety instructions to avoid serious personal injury.

Using this product for purposes other than its intended use could prove dangerous to you and bystanders.

- Read and understand the contents of this *Operator's Manual* before starting the engine.
- Do not put your hands or feet near moving components of the machine.
- Do not operate the machine without all guards and other safety protective devices in place and working on the machine.
- Keep clear of any discharge opening. Keep bystanders and pets a safe distance away from the machine.
- Keep children out of the operating area. Never allow children to operate the machine.
- Stop the machine and shut off the engine before servicing, fueling, or unclogging the machine.

Improperly using or maintaining this machine can result in injury. To reduce the potential for injury, comply with these safety instructions and always pay attention to the safety-alert symbol, which means Caution, Warning, or Danger—personal safety instruction. Failure to comply with these instructions may result in personal injury or death.

You can find additional safety information where needed throughout this *Operator's Manual*.

Safety and Instructional Decals

Safety decals and instructions are easily visible to the operator and are located near any area of potential danger. Replace any decal that is damaged or missing.

decal117-2718

117-2718

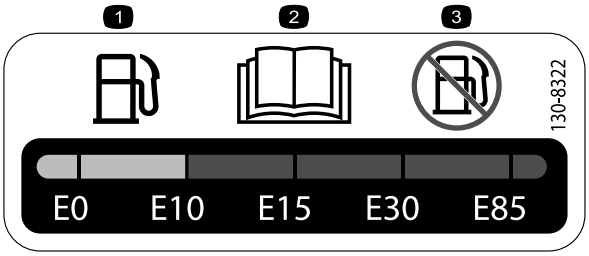

decal130-8322

130-8322

1. Use only fuel with an alcohol content by volume under 10%.
2. Read the *Operator's Manual* for more information on fuel.
3. Do not use fuel with an alcohol content by volume greater than 10%.

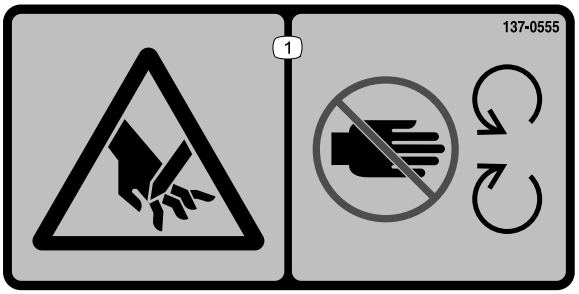

decal137-0555

137-0555

1. Cutting hazard—keep away from moving parts.

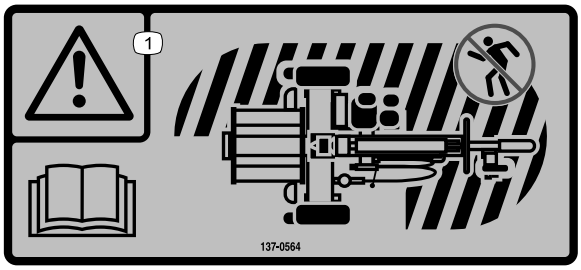

decal137-0564

137-0564

1. Warning—read the *Operator's Manual*; keep away from the machine while in operation.

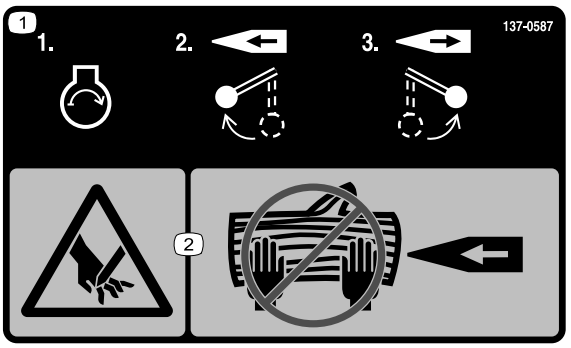

decal137-0587

137-0587

1. 1) Start the engine; 2) Move the lever forward to split the log; 3) Move the lever backward to return the splitting wedge.
2. Cutting hazard—keep hands off of the log.

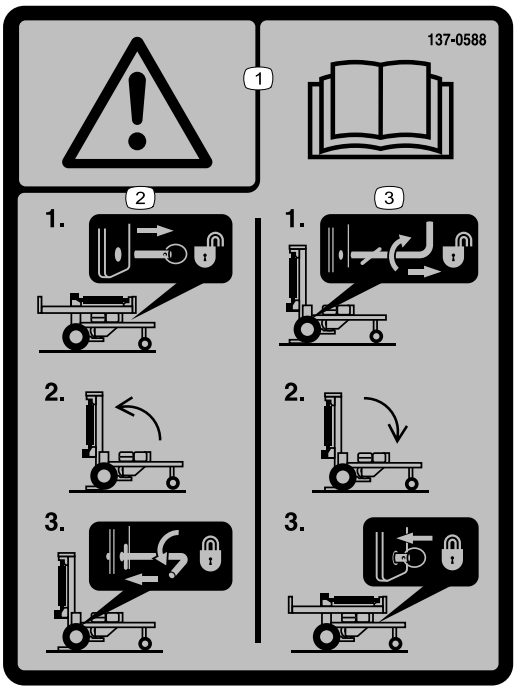

decal137-0588

137-0588

1. Warning—read the *Operator's Manual*.
2. To raise the rail, 1) Remove the lock pin; 2) Raise the rail; 3) Turn the lock lever.
3. To lower the rail, 1) Turn the lock lever; 2) Lower the rail; 3) Insert the lock pin.

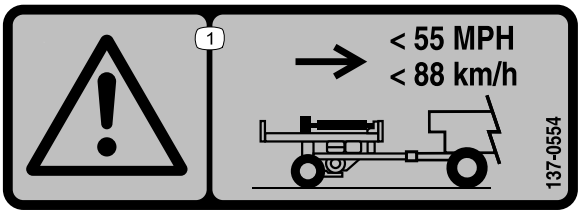

decal137-0554

137-0554

1. Warning—do not exceed 88 km/h (55 mph) when transporting the machine.

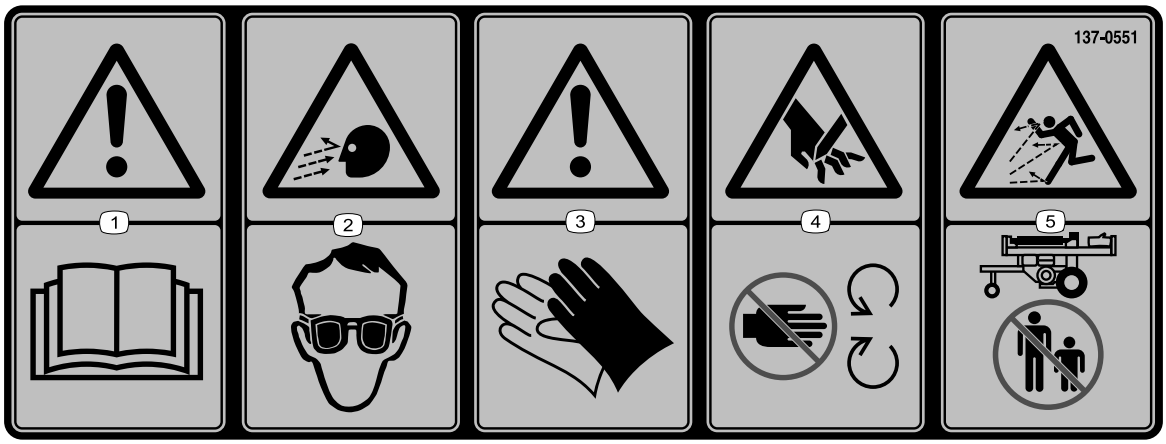

decal137-0551

137-0551

1. Warning—read the *Operator's Manual*.
2. Thrown or flying objects hazard—wear eye protection.
3. Warning—wear protective gloves.
4. Cutting hazard—keep away from moving parts.
5. Thrown object hazard—keep bystanders away from the machine.

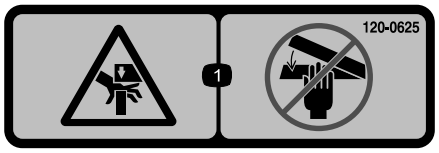

decal120-0625

120-0625

1. Pinch point, hand—keep hands away.

Product Overview

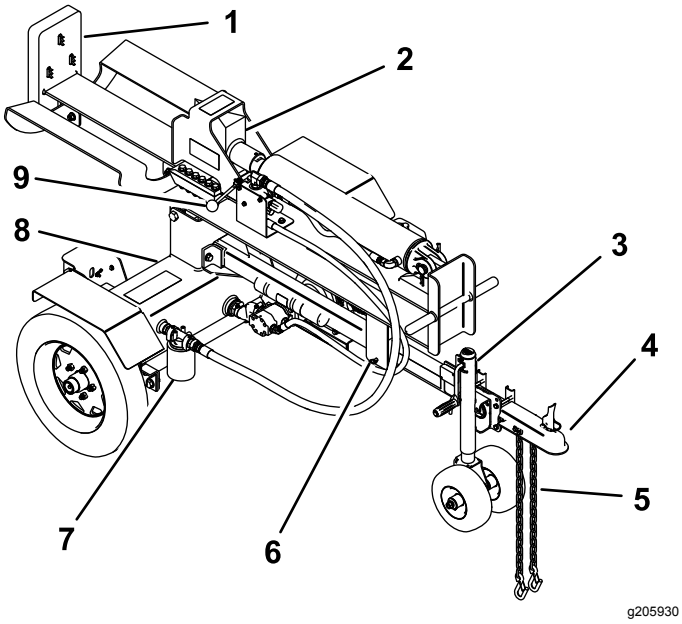

Figure 3

1. End plate
2. Spitting wedge
3. Jack lift
4. Hitch receiver
5. Safety chains
6. Rail locking pin
7. Hydraulic filter
8. Hydraulic reservoir
9. Control lever

Controls

Become familiar with all the controls before you start the engine and operate the machine.

Engine Controls

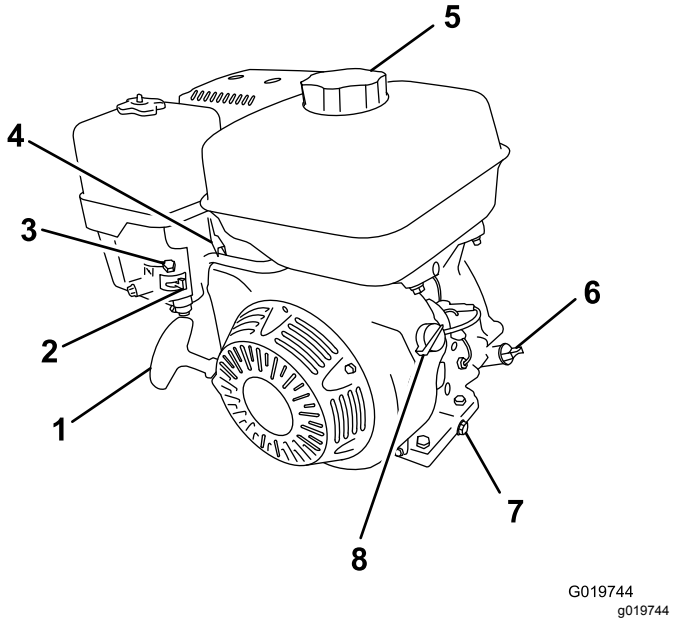

Figure 4

1. Recoil-start handle
2. Fuel valve
3. Choke lever
4. Throttle lever
5. Fuel cap
6. Oil dipstick
7. Oil-drain plug
8. ON/OFF switch

Fuel Valve

The fuel valve (Figure 4) is located underneath the choke lever. Move the lever for the fuel valve to the ON position before attempting to start the engine. When you have finished using the machine, shut off the engine and move the fuel-valve lever to the OFF position.

Choke Lever

Use the choke lever (Figure 4) to start a cold engine. Before pulling the recoil-start handle, move the choke lever to the CLOSED position. Once the engine is running, move the choke lever to the OPEN position. Do not use the choke if the engine is already warmed up or if the air temperature is high.

Throttle Lever

The throttle lever (Figure 4) controls the speed (rpm) of the engine. It is located next to the choke lever.

Engine ON/OFF Switch

The ON/OFF switch is located on the front of the engine.

- Rotate it to the ON position to start and run the engine.
- Rotate it to the OFF position to shut off the engine.

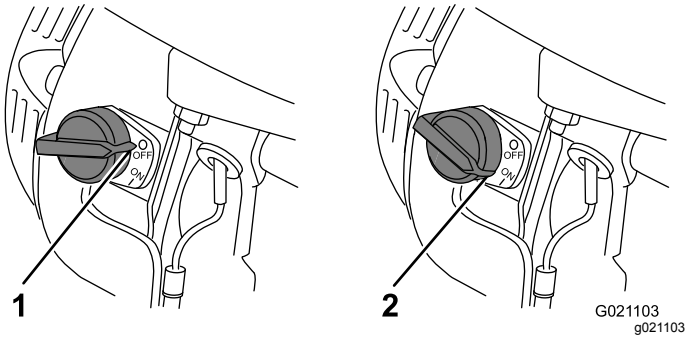

Figure 5

1. Off position
2. On position

Recoil-Start Handle

To start the engine, pull the recoil-start handle (Figure 4) quickly to turn the engine over. The engine controls described above must all be set correctly for the engine to start.

Wedge Control Lever

The wedge control lever actuates the hydraulic valve that moves the splitting wedge forward and reverse during the log splitting process.

- Hold the control lever toward the end plate to move the splitting wedge forward.
- Release the control lever to stop the splitting wedge movement.
- Move the control lever to the reverse position to retract the splitting wedge. Moving the lever to the full reverse position automatically retracts the splitting wedge all the way.

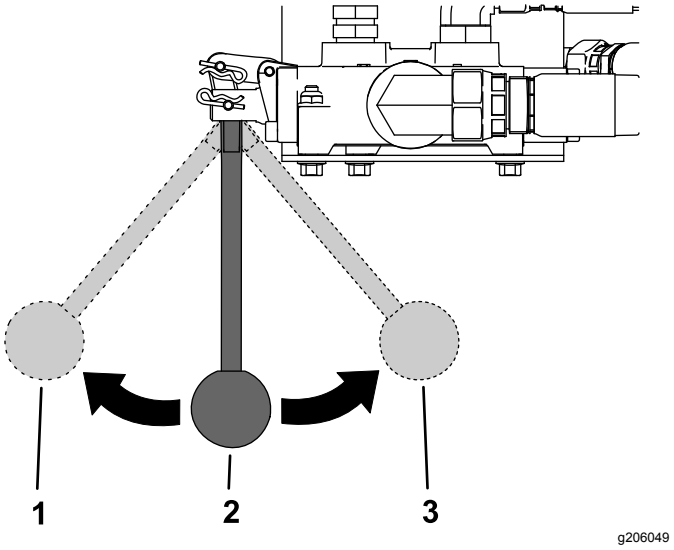

Figure 6

1. Move the wedge forward.
2. Control lever (neutral position)
3. Move the wedge rearward.

Specifications

Length	246 cm (97 inches)
Width	130 cm (51 inches)
Height	115 cm (46 inches)
Weight	412 kg (909 lb)
Maximum log opening	63 cm (25 inches)
Hitch receiver	5 cm (2 inches)

Operation

Before Operation

Before Operation Safety

General Safety

- Never allow children or untrained people to operate or service the machine. Local regulations may restrict the age of the operator. The owner is responsible for training all operators and mechanics.
- Become familiar with the safe operation of the equipment, operator controls, and safety signs.
- Know how to stop the machine and engine quickly.
- Check that operator-presence controls, safety switches, and shields are attached and functioning properly. Do not operate the machine unless they are functioning properly.

Fuel Safety

- To avoid personal injury or property damage, use extreme care in handling fuel. Fuel vapors are flammable and explosive.
- Extinguish all cigarettes, cigars, pipes, and other sources of ignition.
- Use only an approved fuel container.
- Do not remove the fuel cap or add fuel to the fuel tank while the engine is running or while hot.
- Do not refuel the machine indoors.
- Do not store the machine or fuel container where there is an open flame, spark, or pilot light, such as on a water heater or on other appliances.
- Do not fill containers inside a vehicle or on a truck or trailer bed with a plastic liner. Always place containers on the ground, away from your vehicle before filling.
- Remove the equipment from the truck or trailer and refuel it while it is on the ground. If this is not possible, then refuel from a portable container rather than a fuel-dispenser nozzle.
- Do not operate the machine without the entire exhaust system in place and in proper working condition.
- Keep the fuel-dispenser nozzle in contact with the rim of the fuel tank or container opening at all times until fueling is complete. Do not use a nozzle lock-open device.
- If you spill fuel on your clothing, change your clothing immediately. Wipe up any spilled fuel.
- Never overfill the fuel tank. Replace the fuel cap and tighten it securely.
- Store fuel in an approved container and keep it out of the reach of children. Never buy more than a 30-day supply of fuel.
- Do not fill the fuel tank completely full. Add fuel to the fuel tank until the level is at the bottom of the filler neck tube..
  - Avoid prolonged breathing of vapors.
  - Keep your face away from the nozzle and fuel tank opening.
  - Avoid contact with skin; wash off spills with soap and water.

Adding Fuel

Fuel Recommendations

- For best results, use only clean, fresh (less than 30 days old), unleaded gasoline with an octane rating of 87 or higher ((R+M)/2 rating method).
- **Ethanol**: Gasoline with up to 10% ethanol (gasohol) or 15% MTBE (methyl tertiary butyl ether) by volume is acceptable. Ethanol and MTBE are not the same. Gasoline with 15% ethanol (E15) by volume is not approved for use. **Never use gasoline that contains more than 10% ethanol by volume**, such as E15 (contains 15% ethanol), E20 (contains 20% ethanol), or E85 (contains up to 85% ethanol). Using unapproved gasoline may cause performance problems and/or engine damage which may not be covered under warranty.
- **Do not** use gasoline containing methanol.
- **Do not** store fuel either in the fuel tank or in fuel containers over the winter unless you use a fuel stabilizer.
- **Do not** add oil to gasoline.

Important: **To reduce starting problems, add fuel stabilizer to the fuel all season, mixing it with fuel less than 30 days old; run the machine dry before storing it for more than 30 days.**

Do not use fuel additives other than a fuel stabilizer/conditioner. Do not use fuel stabilizers with an alcohol base such as ethanol, methanol, or isopropanol.

Filling the Fuel Tank

Fuel Tank Capacity: 1.1 L (1.2 US qt)

1. Park the machine on a level surface, shut off the engine, and allow the engine to cool.

2. Clean around the fuel cap and remove it (Figure 7).

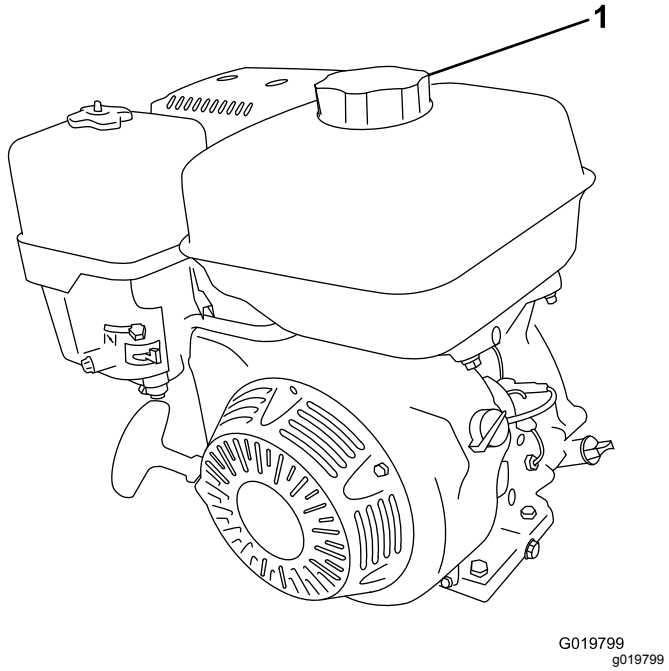

Figure 7

1. Fuel cap

3. Add fuel to the fuel tank until the level is at the maximum fuel level (Figure 8).

   Important: **This space in the tank allows fuel to expand. Do not fill the fuel tank completely full.**

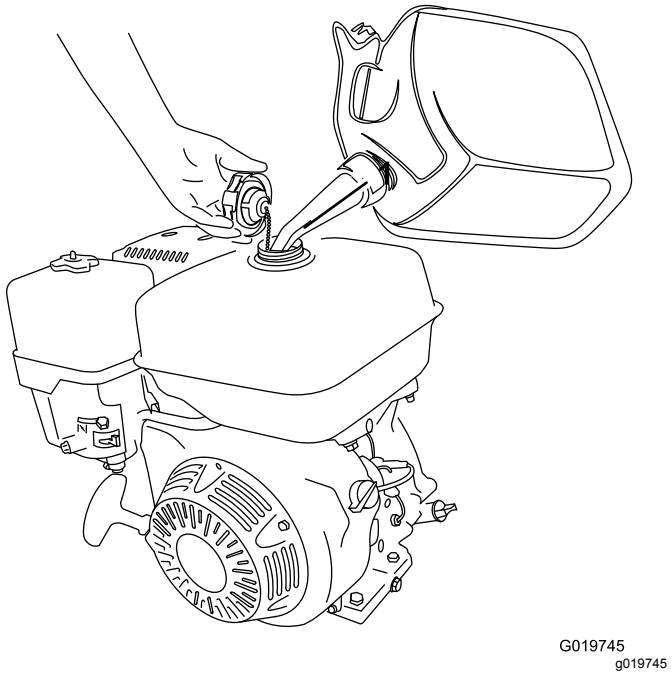

Figure 8

1. Maximum fuel level

4. Install the fuel cap securely (Figure 7).
5. Wipe up any spilled fuel.

Preparing to Use the Machine

1. Park the machine on a level surface and disconnect the machine from the tow vehicle.
2. Chock the front and back of the tires to prevent the machine from moving.
3. Ensure that all guards are in place and in good condition.
4. Ensure that the work area is free of wood and debris.
5. Perform all daily maintenance procedures described in Maintenance (page 16).

During Operation

During Operation Safety

General Safety

- The owner/operator can prevent and is responsible for accidents that may cause personal injury or property damage.
- Wear appropriate clothing, including eye protection; hand protection; slip-resistant, substantial foot protection; and hearing protection. Tie back long hair and do not wear jewelry.
- Do not operate the machine while ill, tired, or under the influence of alcohol or drugs.
- Never carry passengers on the machine and keep bystanders and pets away from the machine during operation.
- Before you start the engine, ensure that the machine is secure from movement, the rail is locked in the horizontal or vertical position, and you are in the operating position.
- Always operate the machine from the operator zone specified in Splitting a Log (page 11). Keep the operator's area and adjacent areas clear for safe, secure footing.
- Keep your hands and feet away from moving parts. Keep clear of the splitting wedge at all times.
- If a helper is assisting in loading logs, never activate the controls until the helper is at least 3 m (10 ft) away from the machine.
- Stop the machine and inspect the splitting wedge after striking an object or if there is an abnormal vibration in the machine. Make all necessary repairs before resuming operation.

- Never run an engine in an area where exhaust gasses are enclosed.
- Never leave a running machine unattended.
- Before leaving the operating position, do the following:
  - Fully retract the splitting wedge.
  - Shut off the engine.
  - Wait for all moving parts to stop.
- Do not operate the machine when there is the risk of lightning.
- Use accessories, attachments, and replacement parts approved by The Toro® Company only.

Splitting Safety

- Place your hands on the sides of the log, not on the ends. Never place your hands or any part of your body between a log and any part of the machine.
- Do not straddle or reach across the log-splitting area when operating the machine.
- Use your only hand to push the control lever forward (toward the log). If the log moves before the splitting wedge contacts it, do not touch the splitting wedge while in motion. Release the control lever, then position the log.
- Operate the machine only from the operating position by the control lever.
- Only 1 adult should stabilize the log and operate the control handle to ensure full control over the log and splitting wedge.
- Never attempt to split more than 1 log at a time.
- Keep the work area clean; remove split logs from around the machine so that you do not slip on them.
- Logs should be cut with ends as square as possible prior to splitting. For logs that are not cut square, the least-square end and longest portion of the log should be placed toward the splitting wedge and the square end placed toward the end plate.

Starting the Engine

1. Turn the engine On/Off switch to the ON position (Figure 5).
2. Move the fuel valve to the OPEN position (Figure 7).

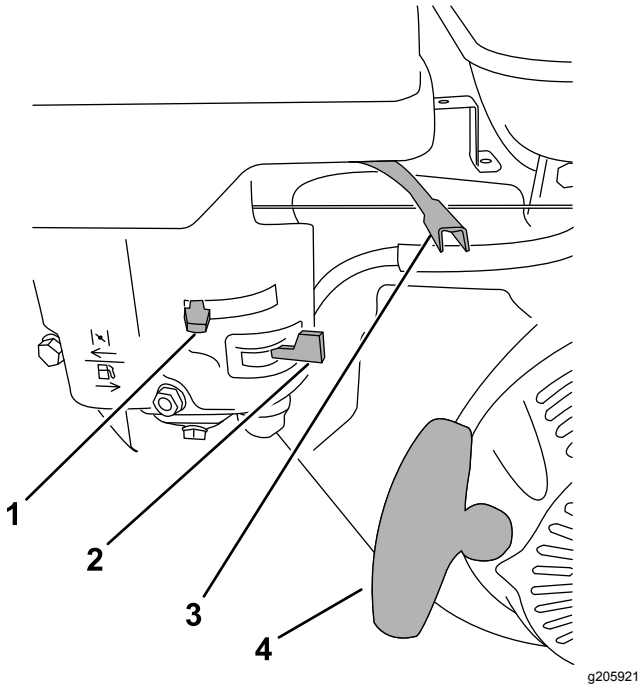

Figure 9

1. Choke lever
2. Fuel valve
3. Throttle lever
4. Recoil-start handle

3. Move the choke lever to the CLOSED position (Figure 7).

   Note: A warm or hot engine may not require choking.
4. Move the throttle lever to the FAST position (Figure 7).
5. Pull the starter handle lightly until you feel resistance, then pull the handle briskly (Figure 7). Return the starter handle gently.
6. After the engine starts, gradually move the choke lever back to the OFF position. If the engine stalls or hesitates, move the choke back to the ON position again until the engine warms up. Then move it to the OFF position.

Shutting off the Engine

1. Move the throttle lever to SLOW position.
2. Turn the engine On/Off switch to the OFF position.
3. Move the fuel valve to the CLOSED position.

Changing the Rail Position

⚠ WARNING

The rail is heavy and can suddenly fall onto the machine frame if you release the handle when raising or lowering the rail.

Control the rail by the handle, and keep your hands away from the machine frame and pinch points when raising or lowering the rail.

Raising the Rail to the Vertical Position

You can rotate the rail and use it in the horizontal or vertical position.

1. Park the machine on a level surface and shut off the engine.
2. Chock the front and back of the tires to prevent the machine from moving.
3. Remove the lock pin (Figure 10).
4. Rotate the rail so that it is vertical, against the base of the machine (Figure 10).
5. Rotate the vertical lock lever to the closed position to secure the lower rail in place (Figure 10).

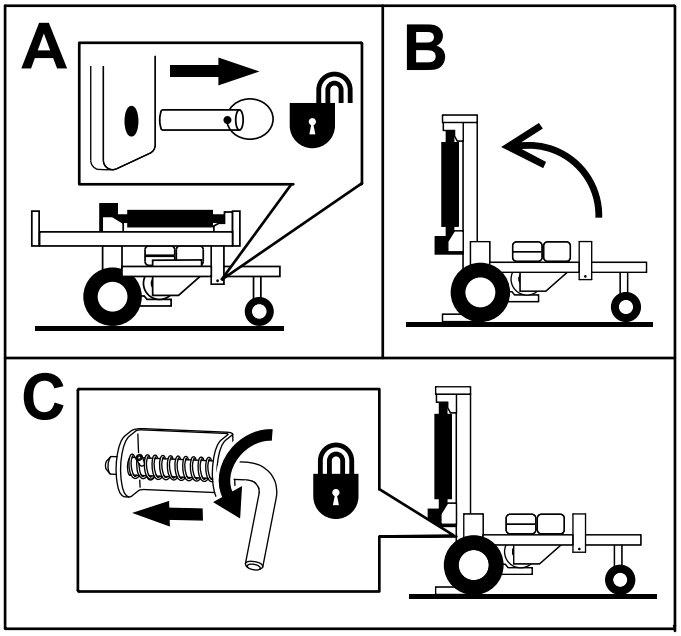

Figure 10

Lowering the Rail to the Horizontal Position

1. Rotate the vertical lock lever to the open position (Figure 11).
2. Carefully rotate the rail into the horizontal position (Figure 11).
3. Install the lock pin to secure the rail (Figure 11).

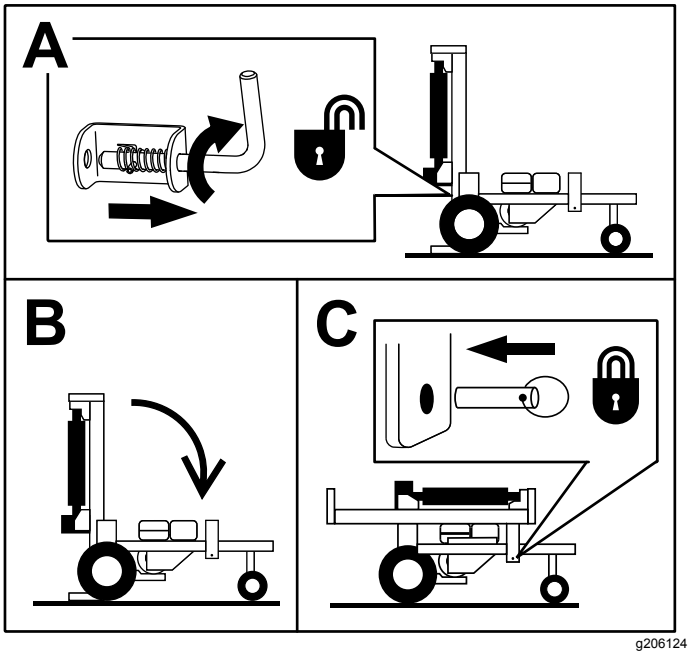

Figure 11

Splitting a Log

⚠ WARNING

This machine is capable of amputating hands and feet.

Always stand in the operating area shown in Figure 12.

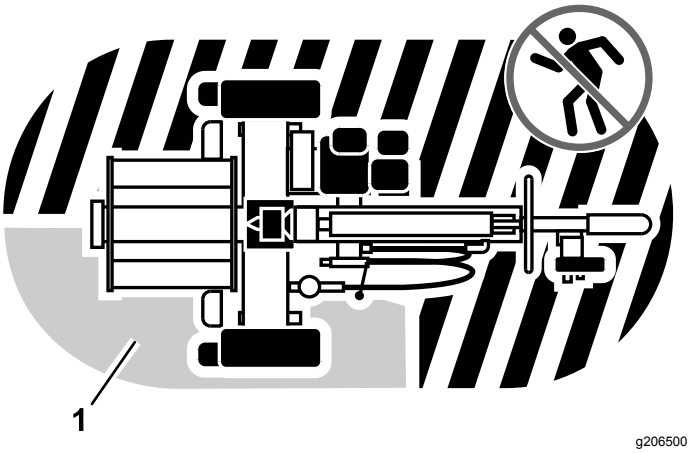

Figure 12

1. Operating area

1. Park the machine on a level surface.

2. Chock the front and back of the tires to prevent the machine from moving.
3. Change the rail position, if desired, and lock it into position; refer to Changing the Rail Position (page 11).
4. Start the engine.
5. Ensure that the logs you are splitting are less than 60 cm (24 inches) long and that both ends are cut as flat as possible.

   Note: This prevents the log from sliding out of position while under pressure.
6. Place the log against the end plate so that the direction of the grain matches the direction of movement for the splitting wedge.

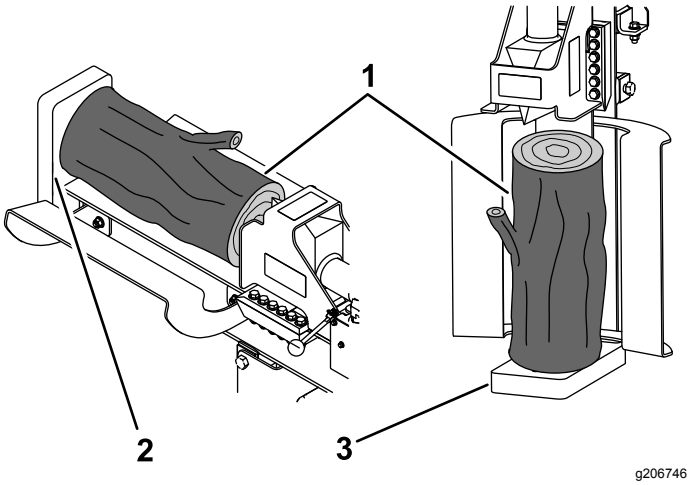

Figure 13

1. Log
2. Endplate—Rail horizontal position
3. Endplate—Rail vertical position

Important: **Never attempt to split logs across the grain.**

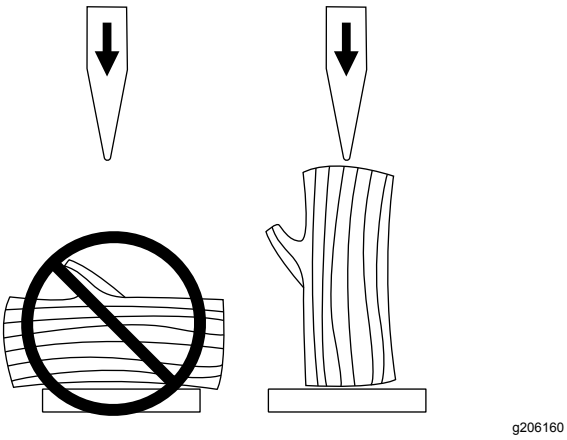

Figure 14

7. Move the control lever to the FORWARD position to split the log.
8. Move the control lever to the REVERSE position to return the splitting wedge.
9. Shut off the engine when you are finished splitting logs.

After Operation

After Operation Safety

- Clean debris from the muffler and engine to help prevent fires. Clean up oil or fuel spills.
- Allow the engine to cool before storing the machine in any enclosure.
- Shut off the fuel before storing or transporting the machine.
- Never store the machine or fuel container where there is an open flame, spark, or pilot light, such as on a water heater or on other appliances.
- Keep all parts of the machine in good working condition and all hardware tightened.
- Replace all worn or damaged decals.

Towing Safety

Check with your local county or state towing safety regulations before towing the machine.

- In order to reduce the possibility of an accident while transporting the machine on public roads, ensure that the towing vehicle is mechanically sound and in good operating condition.
- Shut off the engine before transporting the machine.
- Ensure that the ball hitch you are using is the proper size for the hitch receiver on the machine.
- Inspect the hitch and coupling for wear. **Never** tow the machine with damaged or defective hitches, couplings, chains, or other components.
- Check the tire air pressure on the towing vehicle and the machine.
- Check the tire tread and sidewall for damage and wear.
- Properly attach the safety chains to the towing vehicle.
- Ensure that the directional and brake lights are working properly.
- Ensure that the directional, backup, and brake lights of the tow vehicle are working properly (if equipped).
- Before towing, ensure that your machine is correctly and securely attached to the towing vehicle.
- Ensure that the safety chains are properly secured to the vehicle, and leave enough slack for turning.

- Do not carry any material in the machine when towing.
- Avoid sudden stops and starts. This can cause skidding, or jackknifing. Smooth, gradual starts and stops will improve towing.
- Avoid sharp turns to prevent rolling. Tow only with a vehicle that has a hitch designed for towing. Do not attach towed equipment except at the hitch point.
- Do not tow the machine faster than 88 km/h (55 mph).
- Use caution when backing up; use a spotter outside the vehicle to guide you.
- Do not allow anyone to sit or ride on the machine.
- Disconnect the machine from the tow vehicle before using it.
- Secure the machine from movement before you tow it.
- Place chock blocks underneath the tires to prevent them from rolling while the machine is parked.

Towing the Machine

Before towing the machine, read all of the information and perform all of the applicable procedures in this section to ensure safe and proper towing.

⚠ WARNING

Towing the machine at high speed increases the risk of a hitch malfunction and tire failure. Higher speeds also increase the momentum of the machine and braking distance. If the machine detaches from the tow vehicle at high speed, it could cause damage to property, or injury or death to bystanders.

Do not exceed 88 km/h (55 mph) when towing the machine. For poor road conditions or inclement weather, reduce speed accordingly.

- Review and understand the Towing Safety (page 12).
- Test the brakes of the tow vehicle before towing.
- Avoid sudden starts and stops while towing the machine.

Tow Vehicle Requirements

Before connecting the machine to your tow vehicle, ensure that your vehicle is prepared as follows:

- Ensure that your tow vehicle has towing capacity for the weight of the machine; refer to Specifications (page 7).
- Use a Class 2 or larger receiver.
- Ensure that your tow vehicle has the appropriate hitch to tow the machine; options include a 50 mm (2 inch) ball hitch or a pintle hitch.
- Ensure that the electrical connector of the tow vehicle is compatible with the electrical connector of the machine. The machine uses a standard 4-pin, flat plug. If your tow vehicle has a different type of plug, obtain an adapter from an automotive parts store.

Hitching the Machine to a Tow Vehicle

1. Shut-off the engine and fuel valve.
2. Lower the rail to the horizontal position and secure it with the lock pin; refer to Lowering the Rail to the Horizontal Position (page 11).
3. Inspect the tires; refer to Checking the Tire Pressure (page 23).
4. Apply chassis grease to the socket of the hitch receiver and the area of the clamp that contacts the ball.
5. Oil the pivot points and sliding surfaces of the hitch receiver with SAE 30 motor oil.
6. Crank the handle of the jack lift to align the hitch receiver with the ball of the tow vehicle.
7. Hitch the machine as shown in Figure 15.

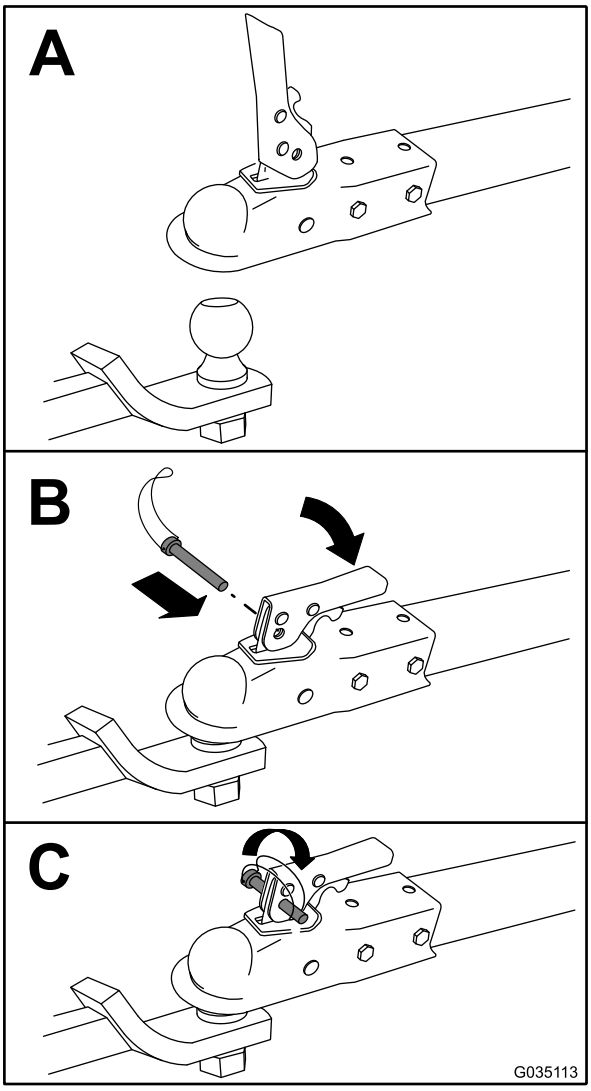

g035113

Figure 15

8. Crank the handle on the jack lift to raise the caster wheels off the ground.

Connecting the Safety Chains to the Tow Vehicle

1. Pull the safety chain through the slots in the keyholes, so that the lengths on each side are equal.
2. Cross both lengths of chain **under** the hitch receiver.

   Note: Crossing the chains decreases the chances of the front of the machine dropping to the ground if the hitch does not hold the connection.

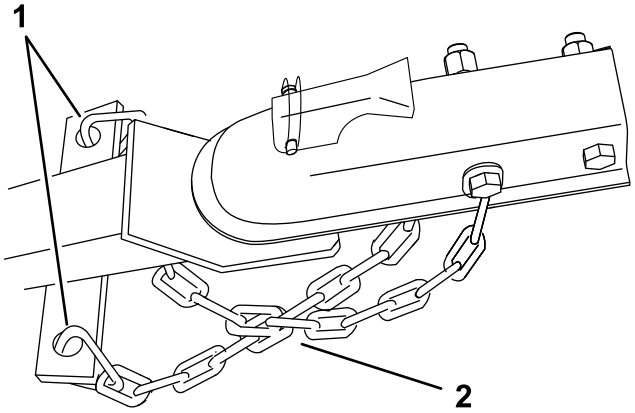

g206325

Figure 16

1. Connecting links
2. Chains crossed under hitch receiver

3. Connect each length of chain to the safety chain mounting point on the tow vehicle with the connecting links (Figure 16).

   Important: **Ensure that the chain has enough slack for turning around corners when towing the machine.**

Connecting and Checking the Lights

1. Connect the electrical plug of the machine with the electrical plug of the tow vehicle (Figure 17).

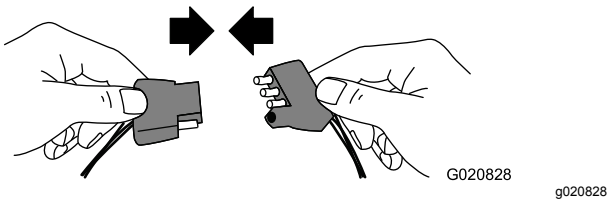

Figure 17

Note: The machine uses a standard 4-pin, flat plug. If your tow vehicle has a different type of plug, obtain an adapter from an automotive parts store.

2. Ensure that the tow vehicle is in NEUTRAL, engage the parking brake, and start the engine.
3. Test the lights as follows:
   A. Turn on the headlights of the tow vehicle.

      Note: The tail lights of the machine should illuminate.

   B. Press the brake pedal of the tow vehicle.

      Note: The brake lights of the machine should illuminate.

   C. Operate each turn signal of the tow vehicle in turn.

      Note: The corresponding turn-signal lights of the machine should illuminate.

Maintenance

Determine the left and right sides of the machine from the normal operating position.

Recommended Maintenance Schedule(s)

Maintenance Service Interval	Maintenance Procedure
After the first hour	• Check the wheel lug nuts.
After the first 10 hours	• Check the wheel lug nuts.
After the first 20 hours	• Change the engine oil.
Before each use or daily	• Inspect the air-cleaner elements. • Check the engine-oil level. • Check the tire pressure. • Check the hydraulic-fluid level.
Every 50 hours	• Clean the air-cleaner elements. Clean them more frequently in dusty operating conditions.
Every 100 hours	• Change the engine oil (more often in extremely dusty or sandy conditions). • Check the spark plug. • Clean the fuel-sediment cup. • Replace the hydraulic filter. • Replace the hydraulic fluid.
Every 300 hours	• Replace the paper air-cleaner element. Replace it more frequently in dusty operating conditions. • Replace the spark plug.
Every 500 hours	• Grease the wheel bearings.
Yearly or before storage	• Change the engine oil. • Clean the fuel-sediment cup.

Note: Refer to your engine owner's manual for additional maintenance procedures.

Pre-Maintenance Procedures

Maintenance and Storage Safety

- Before repairing the machine do the following:
  - Park the machine on a level surface.
  - Fully retract the splitting wedge.
  - Shut off the engine.
  - Disconnect the spark-plug wire.
- Clean grass and debris from the muffler and engine to help prevent fires.
- Clean up oil or fuel spills.
- Let the engine cool before storing the machine.
- Do not store the machine or fuel near flames or drain the fuel indoors.
- Do not allow untrained personnel to service the machine.
- Use jack stands to support the machine and/or components when required.
- Carefully release pressure from components with stored energy.
- Remove the spark-plug wire before making any repairs.
- Keep your hands and feet away from moving parts. If possible, do not make adjustments with the engine running.
- Keep all parts in good working condition and all hardware tightened. Replace all worn or damaged decals.
- Never interfere with the intended function of a safety device or reduce the protection provided by a safety device. Check their proper operation regularly.
- To ensure optimum performance and continued safety certification of the machine, use only

genuine Toro replacement parts and accessories. Replacement parts and accessories made by other manufacturers could be dangerous, and such use could void the product warranty.

Disconnecting the Spark-plug Wire

Pull the spark-plug wire off the terminal of the spark plug (Figure 18).

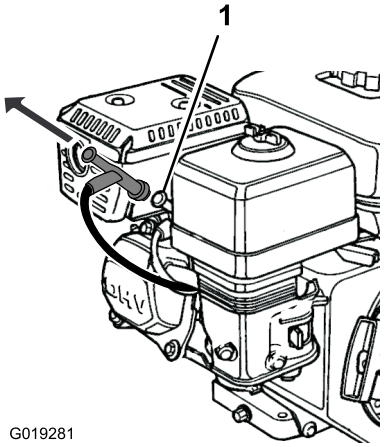

g019281

Figure 18

1. Spark plug

Lubrication

Greasing the Rail

Grease type: General-purpose grease

If the splitting wedge gets stuck on the rail, grease the rail. Make sure to lubricate both sides of the beam face.

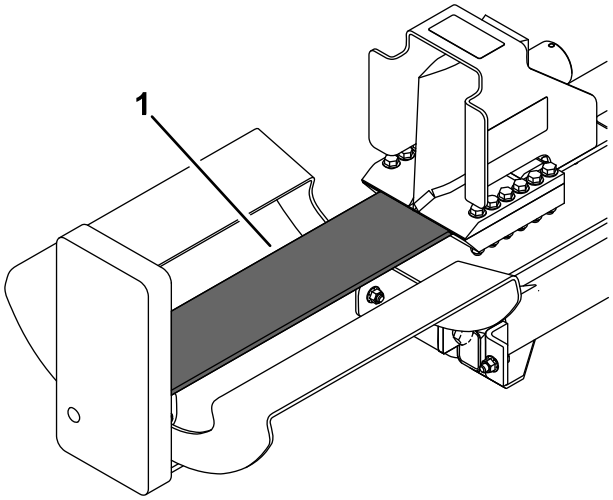

g206411

Figure 19

1. Rail

Greasing the Wheel Bearings

Service Interval: Every 500 hours

Grease type: General-purpose grease

1. Remove the rubber plugs from the axle (Figure 20).

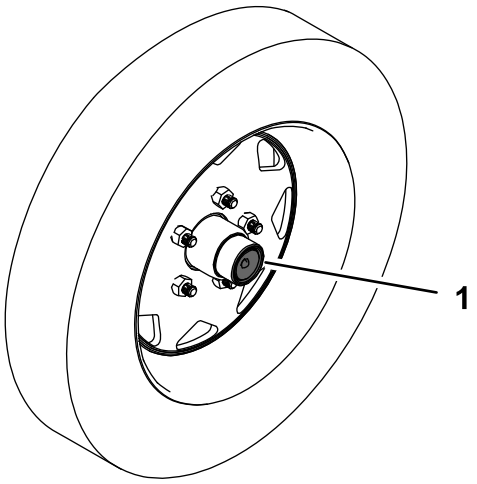

g206422

Figure 20

1. Rubber plug

2. Connect a grease gun to the grease fittings and pump grease into the fittings on the axle (Figure 20) and the caster wheels (Figure 21) until grease begins to ooze out of the bearings.

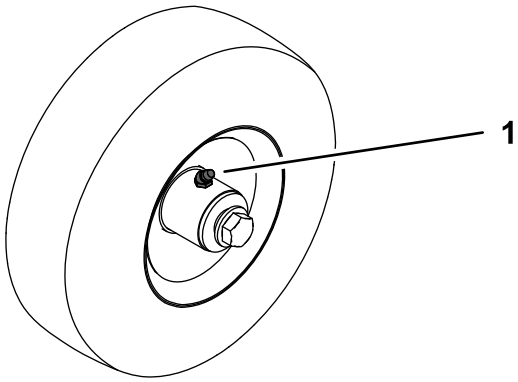

g206425

Figure 21

1. Grease fitting

3. Install the rubber plugs (Figure 20).

Engine Maintenance

Engine Safety

- Shut off the engine before checking the oil or adding oil to the crankcase.
- Do not change the governor speed or overspeed the engine.

Servicing the Air Cleaner

Service Interval: Before each use or daily—Inspect the air-cleaner elements.

Every 50 hours—Clean the air-cleaner elements. Clean them more frequently in dusty operating conditions.

Every 300 hours/Yearly (whichever comes first)—Replace the paper air-cleaner element. Replace it more frequently in dusty operating conditions.

Important: **Do not operate the engine without the air-filter assembly; extreme engine damage will occur.**

1. Shut off the engine and wait for all moving parts to stop.
2. Disconnect the wire from the spark plug; refer to Disconnecting the Spark-plug Wire (page 17).
3. Remove the nut that secures the cover (Figure 22).

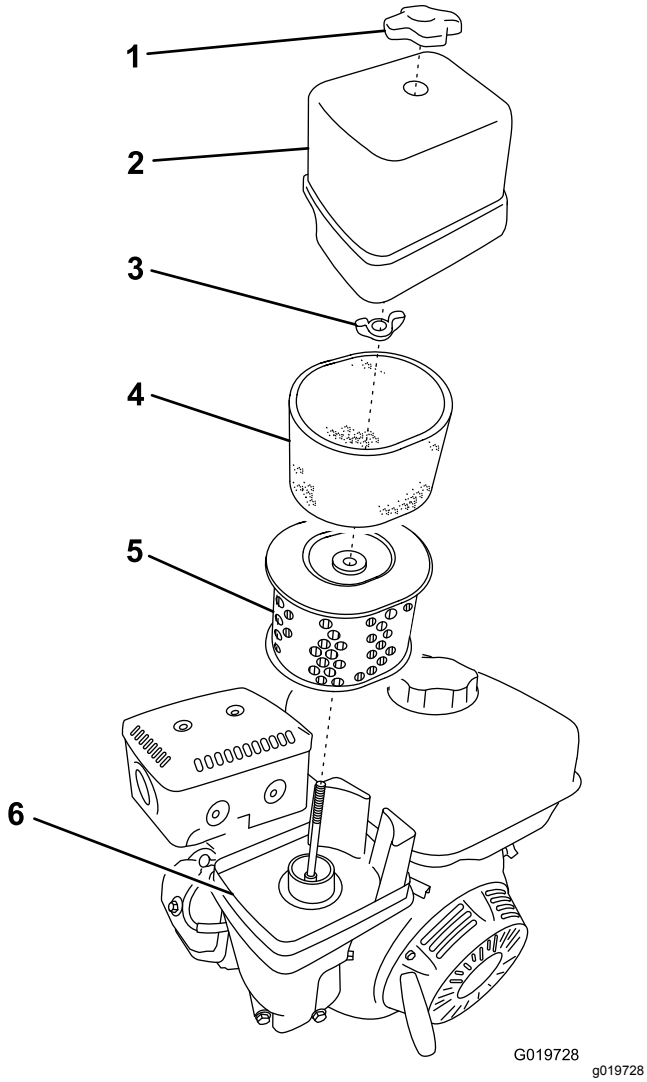

Figure 22

1. Cover nut
2. Cover
3. Wing nut
4. Foam element
5. Paper element
6. Base

4. Remove the cover.

   Note: Be careful to prevent dirt and debris from falling into the base.

5. Remove the foam and paper elements from the base (Figure 22).
6. Remove the foam element from the paper element (Figure 22).
7. Inspect the foam and paper elements and replace them if they are damaged or excessively dirty.

   Note: Never try to brush dirt off the paper element; brushing forces the dirt into the fibers.

8. Clean the foam element in warm, soapy water or in a **nonflammable** solvent.

   Note: Do not use fuel to clean the foam element because it could create a risk of fire or explosion.

9. Rinse and dry the foam element thoroughly.
10. Dip the foam element in clean engine oil, then squeeze out the excess oil.

    Note: Excess oil in the foam element restricts the air flow through the element and may reach the paper filter and clog it.

11. Wipe dirt from the base and the cover with a moist rag.

    Note: Be careful to prevent dirt and debris from entering the air duct leading to the carburetor.

12. Install the air-cleaner elements and ensure that they are properly positioned.
13. Securely install the cover with the nut.

Servicing the Engine Oil

Note: Change the oil more frequently when the operating conditions are extremely dusty or sandy.

Engine-Oil Specifications

Toro Premium Engine Oil is available from your Authorized Toro Dealer.

Oil Type: Detergent oil with an API service of SJ or higher.

Crankcase Capacity: 1.1 L (1.2 US qt)

Viscosity: Refer to the table below.

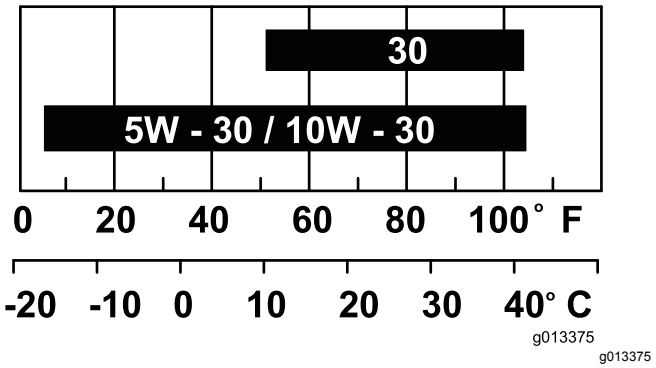

Figure 23

Checking the Engine-Oil Level

Service Interval: Before each use or daily

1. Park the machine on a level surface and shut off the engine.
2. Allow the engine to cool.
3. Disconnect the wire from the spark plug; refer to Disconnecting the Spark-plug Wire (page 17).
4. Clean around the dipstick.
5. Check the oil level as shown in Figure 24.

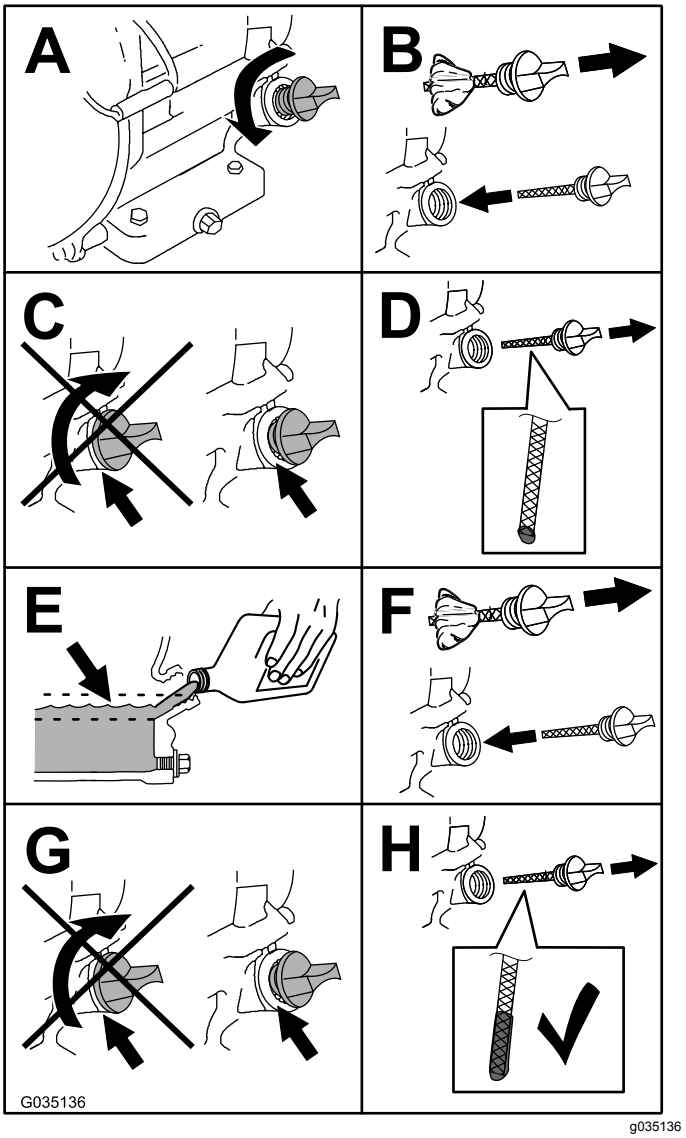

Figure 24

Changing the Engine Oil

Service Interval: After the first 20 hours—Change the engine oil.

Every 100 hours—Change the engine oil (more often in extremely dusty or sandy conditions).

Yearly or before storage—Change the engine oil.

Note: Dispose of the used oil at a recycling center.

1. Start the engine and let it run for 5 minutes.

   Note: This warms the oil so that it drains better.
2. Park the machine on a level surface and shut off the engine.
3. Disconnect the wire from the spark plug; refer to Disconnecting the Spark-plug Wire (page 17).
4. Change the oil as shown in Figure 25.

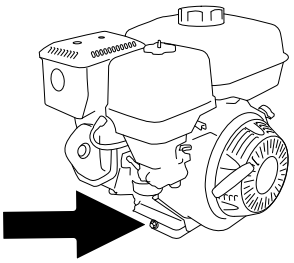

g206641

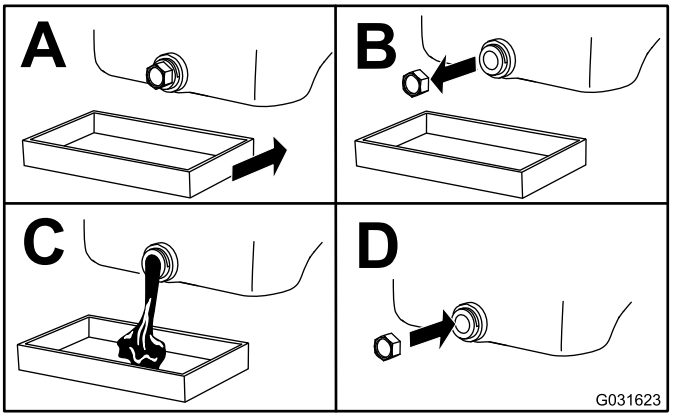

g031623

Figure 25

5. Slowly pour approximately 80% of the specified oil into the filler tube and slowly add the additional oil to bring it to the **Full** mark (Figure 26).

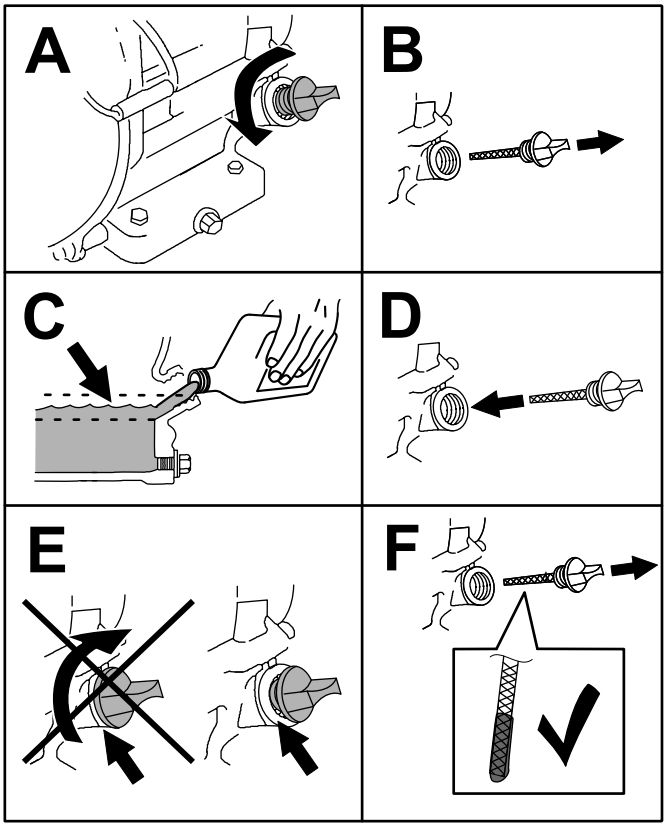

g206640

Figure 26

Servicing the Spark Plug

Spark Plug Specifications

Type: NGK BPR6ES or equivalent

Gap: 0.7 to 0.8 mm (0.028 to 0.031 inch)

Note: Use a 21 mm (13/16 inch) spark-plug wrench for removing and installing the spark plug.

Removing the Spark Plug

1. Park the machine on a level surface and shut off the engine.
2. Locate and remove the spark plugs (Figure 27).

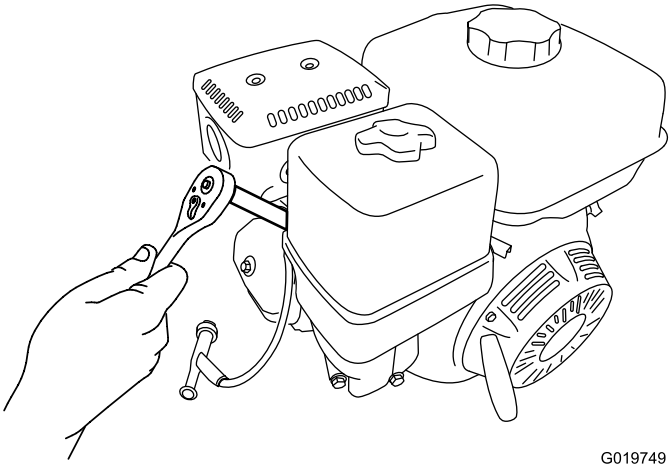

G019749
g019749

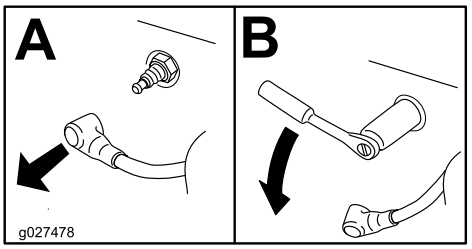

g027478

Figure 27

Checking the Spark Plug

Service Interval: Every 100 hours/Every 6 months (whichever comes first)

Every 300 hours/Yearly (whichever comes first)

Important: **Do not clean the spark plug(s). Always replace the spark plug(s) when it has: a black coating, worn electrodes, an oily film, or cracks.**

If you see light brown or gray on the insulator, the engine is operating properly. A black coating on the insulator usually means the air cleaner is dirty.

Set the gap to 0.70 to 0.80 mm (0.28 to 0.031 inch).

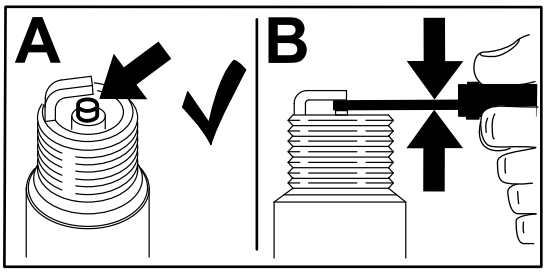

g206628

Figure 28

Installing the Spark Plug

Tighten the spark plug(s) to 27 N·m (20 ft-lb).

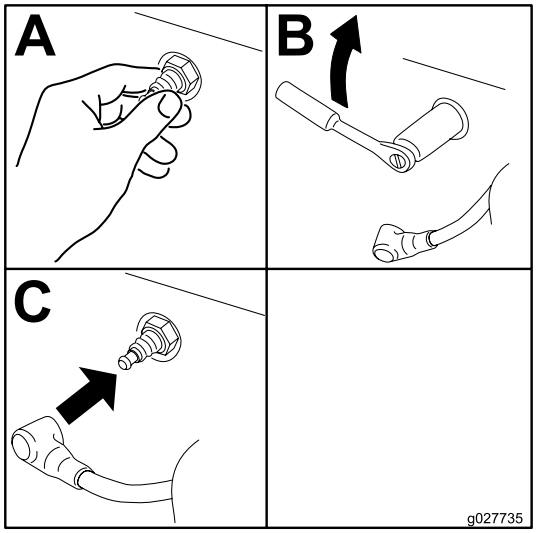

g027735

Figure 29

Fuel System Maintenance

Cleaning the Fuel-Sediment Cup

Service Interval: Every 100 hours/Every 6 months (whichever comes first)—Clean the fuel-sediment cup.

Yearly or before storage—Clean the fuel-sediment cup.

Underneath the fuel valve is a sediment cup to catch dirt in the fuel.

1. Park the machine on a level surface and shut off the engine.
2. Allow the engine to cool.
3. Disconnect the wire from the spark plug; refer to Disconnecting the Spark-plug Wire (page 17).
4. Move the lever of the fuel valve to the OFF position, all the way to the left (Figure 30).
5. Unscrew the fuel-sediment cup (Figure 30).
6. Remove and retain the fuel filter and O-ring (Figure 30).

   Note: Do not clean the O-ring in solvent.

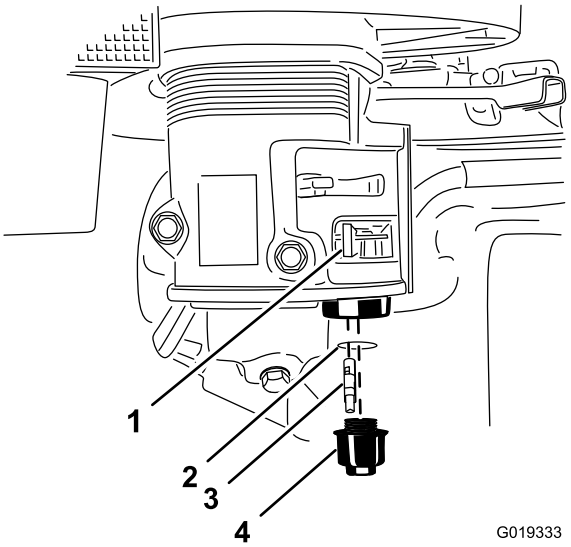

g019333

Figure 30

1. Fuel valve—OFF position
2. O-ring
3. Fuel filter
4. Fuel-sediment cup

7. Clean the fuel filter and sediment cup using a nonflammable solvent, and dry it carefully.
8. Wipe the O-ring with a clean, dry cloth.
9. Install the fuel filter in the bottom of the carburetor (Figure 30).

10. Align the O-ring into the groove in the sediment cup and install the sediment cup to the fuel-valve housing.
11. Move the lever of the fuel valve to the ON position (all the way to the right) and check for leaks. If it leaks, replace the O-ring.

Drive System Maintenance

Checking the Tire Pressure

Service Interval: Before each use or daily

⚠ WARNING

Failure to maintain correct tire pressure may result in tire failure and loss of control, resulting in property damage and serious injury or death.

- **Check the tire pressure frequently to ensure proper inflation. If the tires are not inflated to the correct pressure, they will wear prematurely.**
- **Inspect the tire condition before towing and after any operating accident.**

The DOT tire information is located on the side of each tire. This information gives load and speed ratings. Replacement tires should have the same or better ratings. For more information go to http://www.nhtsa.gov/Vehicle+Safety/Tires.

1. Visually inspect the tires for damage and wear (Figure 31 and Figure 32).

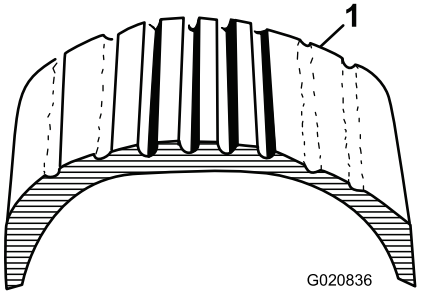

g020836

Figure 31

1. Example of tire wear caused by underinflation

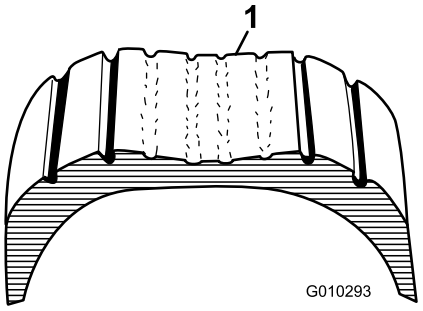

g010293

Figure 32

1. Example of tire wear caused by overinflation

2. Ensure that the tires are inflated to 410 kPa (60 psi).

Checking the Wheel Lug Nuts

Service Interval: After the first hour

After the first 10 hours

Check and torque the wheel lug nuts to 108 to 122 N·m (80 to 90 ft-lb).

Hydraulic System Maintenance

Hydraulic System Safety

- **Ensure that all hydraulic-fluid hoses and lines are in good condition and all hydraulic connections and fittings are tight before applying pressure to the hydraulic system.**
- **Keep your body and hands away from pinhole leaks or nozzles that eject high-pressure hydraulic fluid.**
- **Use cardboard or paper to find hydraulic leaks.**
- **Safely relieve all pressure in the hydraulic system before performing any work on the hydraulic system.**
- **Seek immediate medical attention if fluid is injected into skin. Injected fluid must be surgically removed within a few hours by a doctor.**

Hydraulic Fluid Specifications

Hydraulic tank capacity: 30 L (8 US gallons)

Hydraulic fluid type: Toro All Season Hydraulic Fluid

Note: Many hydraulic fluids are almost colorless, making it difficult to spot leaks. A red dye additive for the hydraulic system fluid is available in 20 ml (2/3 fl oz) bottles. One bottle is sufficient for 15 to 22 L (4 to 6 US gallons) of hydraulic fluid. Order Part No. 44-2500 from your Authorized Toro Dealer.

Checking the Hydraulic-Fluid Level

Service Interval: Before each use or daily

Note: The best time to check the hydraulic-fluid level is when the machine is cool, before you start it for the day.

1. Park the machine on a level surface and fully retract the splitting wedge.
2. Shut off the engine. Allow the machine to cool completely.
3. Lower the rail to the horizontal position; refer to Lowering the Rail to the Horizontal Position (page 11)
4. Clean around the breather cap (Figure 33).

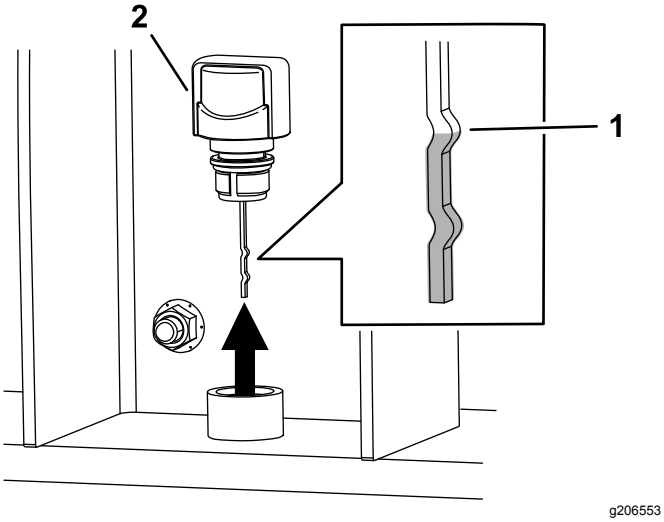

Figure 33

1. Upper notch
2. Breather cap

5. Remove the breather cap (Figure 33).
6. Wipe the dipstick off and thread the breather cap into the reservoir.
7. Remove the dipstick and verify that the fluid is at the upper notch (Figure 33). Install the breather cap.
8. If the fluid level is low, remove the filler plug and slowly add hydraulic fluid into the reservoir to raise the level to the upper notch on the dipstick (Figure 34).

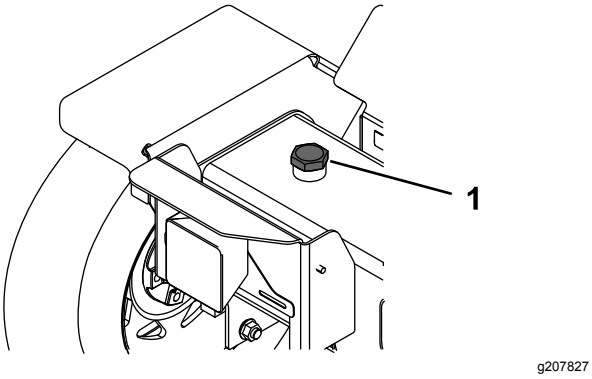

Figure 34

1. Filler plug

9. Install the filler plug.

Replacing the Hydraulic Filter

Service Interval: Every 100 hours

1. Park the machine on a level surface, fully retract the splitting wedge, and shut off the engine.
2. Place a drain pan under the filter and replace the filter (Figure 35).

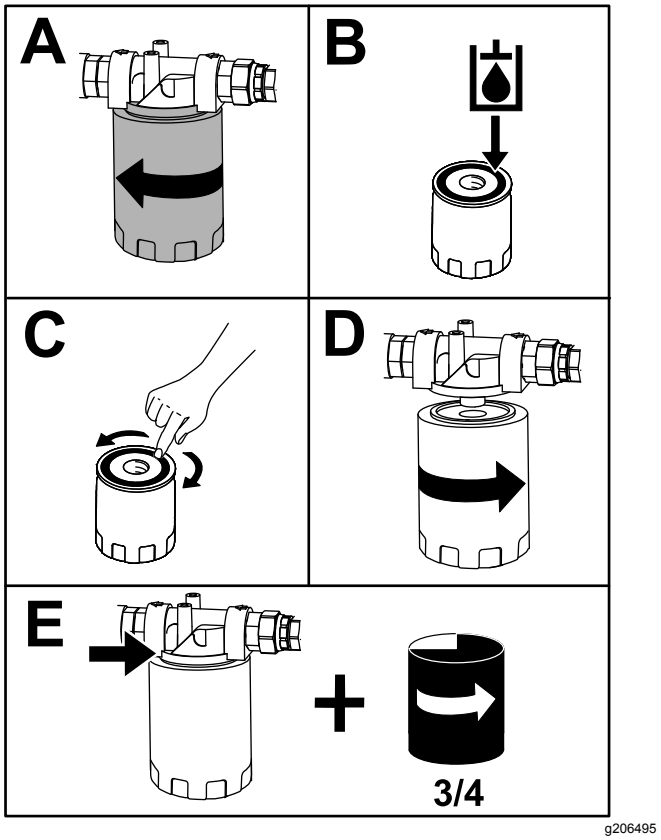

Figure 35

3. Clean up any spilled fluid.

Replacing the Hydraulic Fluid

Service Interval: Every 100 hours

1. Park the machine on a level surface, fully retract the splitting wedge, and shut off the engine. Allow the machine to cool completely.
2. Place a drain pan under the suction hose connected to the reservoir tank (Figure 36).

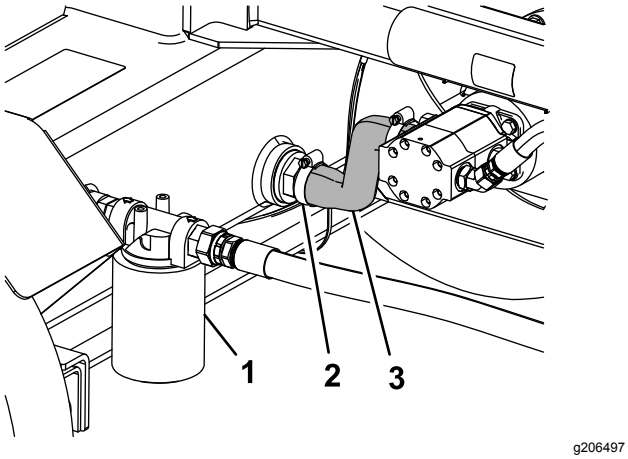

Figure 36

1. Hydraulic filter
2. Hose clamp
3. Hose

3. Crank the handle of the jack lift to lower the front of the machine.
4. Disconnect the suction hose and allow fluid to drain into the drain pan.
5. Install the suction hose and secure it with the hose clamp.
6. Crank the handle of the jack lift to raise the machine so that it is level.
7. Remove the filler plug and fill the reservoir with hydraulic fluid as specified in Hydraulic Fluid Specifications (page 24).

   Note: The fluid level should be at the upper notch on the dipstick on the breather cap (Figure 33)

Storage

For storage over 30 days, prepare the machine as follows:

1. Remove dirt and grime from the external parts of the entire unit, especially the engine. Clean dirt and sawdust chips from the outside of the engine cylinder head fins and blower housing.

   Important: **You can wash the unit with mild detergent and water.**
2. Add a petroleum-based stabilizer/conditioner to fuel in the tank. Follow mixing instructions from stabilizer manufacturer. (7.8 ml per L or 1 fl oz per US gallon).

   Note: Fuel stabilizer/conditioner is most effective when mixed with fresh fuel and used at all times.

   Important: **Do not use an alcohol-based stabilizer (ethanol or methanol). Do not store stabilizer/conditioned fuel over 90 days.**
3. Run the engine to distribute conditioned fuel through the fuel system (5 minutes).
4. Shut off the engine, allow it to cool, and drain the fuel tank using a pump type siphon. Dispose of fuel properly; recycle as per local codes.
5. Start the engine and run it until it shuts off.
6. Engage the choke lever.
7. Start and run the engine until it does not start.
8. Clean the sediment cup; refer to Cleaning the Fuel-Sediment Cup (page 22).
9. Service the air cleaner; refer to Servicing the Air Cleaner (page 18).
10. Change the engine oil; refer to Changing the Engine Oil (page 20).
11. Remove the spark plug and check the condition; refer to Servicing the Spark Plug (page 21).
12. With the spark plug removed from the engine, pour 2 tablespoons of engine oil into the spark plug hole.
13. Pull the starter slowly to crank the engine and distribute the oil inside the cylinder.
14. Install the spark plug, but do not install the wire on the spark plug.
15. Check and tighten all bolts, nuts, and screws. Repair or replace any part that is damaged.
16. Paint all scratched or bare metal surfaces. Paint is available from your Authorized Service Dealer.
17. Store the machine in a clean, dry garage or storage area.
18. Cover the machine to protect it and keep it clean.

Troubleshooting

Problem	Possible Cause	Corrective Action
The engine does not start.	1. The engine On/Off switch is in the OFF position. 2. The fuel-shutoff valve is closed. 3. The choke is open. 4. The fuel tank is empty. 5. The throttle is not in the FAST position. 6. The spark plug wire is loose or disconnected.	1. Move the switch to the ON position. 2. Open the fuel-shutoff valve. 3. Close the choke when starting a cold engine. 4. Fill the tank with fresh fuel. 5. Move the throttle to the FAST position. 6. Check the electrode gap and clean or replace the spark plug.
The engine runs rough.	1. The choke is closed. 2. The air filter is clogged. 3. The fuel line is clogged. 4. There is water or contaminants in the fuel. 5. The spark plugs are worn or have buildup on the electrodes.	1. Open the choke. 2. Clean or replace the air filter. 3. Clean the sediment cup. 4. Drain the fuel tank and fill it with fresh fuel. 5. Check the electrode gap and clean or replace the spark plug.
The splitting wedge does not move.	1. The hydraulic-fluid level may be low. 2. The control valve or pump is blocked or damaged.	1. Add hydraulic fluid. 2. Contact your Authorized Service Dealer.
The splitting wedge moves slowly.	1. The engine speed is set on idle. 2. The hydraulic fluid is contaminated. 3. The hydraulic pump, cylinder, or directional valve is damaged.	1. Move the throttle to the FAST position. 2. Change the hydraulic fluid and filter. 3. Contact your Authorized Service Dealer.

The Toro Warranty

A limited warranty (see warranty periods below)

SWS
Tree Care

Conditions and Products Covered

The Toro Company and its affiliate, Toro Warranty Company, pursuant to an agreement between them, jointly warrant your Toro Products listed below to be free from defects in materials or workmanship.

This warranty covers the cost of parts and labor, but you must pay transportation costs.

The following time periods apply from the original date of purchase:

Products	Warranty Period
Log Splitter	1 year
• Battery	90 days Parts and Labor
	1 year Parts Only
• Engine	2 years
Stump Grinder	1 year
• Engine	2 years

Where a warrantable condition exists, we will repair the Product at no cost to you including diagnosis, labor, and parts.

Instructions for Obtaining Warranty Service

If you think that your Toro Product contains a defect in materials or workmanship, follow this procedure**:

1. Contact any Authorized Servicing Outlet to arrange service at their dealership. To locate one convenient to you, access our website at www.Toro.com. Select “Where to Buy” and select “Contractor” under product type. You may also call our toll free number below.
2. Bring the product and your proof of purchase (sales receipt) to them.
3. If for any reason you are dissatisfied with the Service Outlet’s analysis or with the assistance provided, contact us at:

   Toro Warranty Company
   SWS Customer Care Department
   8111 Lyndale Avenue South
   Bloomington, MN 55420-1196
   Toll Free: 800-888-9926

**Toro Authorized Rental Customers who have purchased products directly from Toro and have signed the Toro Rental Customer Agreement have the ability to perform their own warranty work. Please visit Toro’s Rental Portal for electronic warranty clam filing procedures or call the toll free number above.

Owner Responsibilities

You must maintain your Toro Product by following the maintenance procedures described in the *Operator’s Manual*. Such routine maintenance, whether performed by a dealer or by you, is at your expense. Parts scheduled for replacement as required maintenance (“Maintenance Parts”), are warranted for the period of time up to the scheduled replacement time for that part. Failure to perform required maintenance and adjustments can be grounds for disallowing a warranty claim.

Items and Conditions Not Covered

Not all product failures or malfunctions that occur during the warranty period are defects in materials or workmanship. This express warranty does not cover the following:

- Product failures which result from installation and use of add-on, modified, or unapproved accessories
- Failure to perform required maintenance and/or adjustments
- Repairs necessary due to failure to follow recommended fuel procedure (consult the *Operator's Manual* for more details)
  - Removing contaminants from the fuel system is not covered
  - Use of old fuel (more than one month old) or fuel which contains more than 10% ethanol or more that 15% MTBE
  - Failure to drain the fuel system prior to any period of non-use over one month
- Product failures which result from operating the product in an abusive, negligent or reckless manner
- Parts subject to consumption through use unless found to be defective. Examples of parts which are consumed include: belts, cutters, blades, teeth, spark plugs, tires, filters, etc.
- Failures caused by outside influence include, weather, storage, contamination, lubricants, additives, chemicals, etc.
- Normal “wear and tear” items incudes painted surfaces and scratched decals, etc.
- Any component covered by a separate manufacturer’s warranty
- Pickup and delivery charges

General Conditions

Repair by an Authorized Servicing Outlet or Self-Service as an Authorized Rental Customer is your sole remedy under the warranty.

Neither The Toro Company nor Toro Warranty Company is liable for indirect, incidental or consequential damages in connection with the use of the Toro Products covered by this warranty, including any cost or expense of providing substitute equipment or service during reasonable periods of malfunction or non-use pending completion of repairs under this warranty. All implied warranties of merchantability and fitness for use are limited to the duration of this express warranty. Some states do not allow exclusions of incidental or consequential damages, or limitations on how long an implied warranty lasts, so the above exclusions and limitations may not apply to you.

This warranty gives you specific legal rights, and you may also have other rights which vary from state to state.

Except for the engine warranty coverage and the Emissions warranty referenced below, if applicable, there is no other express warranty. The Emissions Control System on your Product may be covered by a separate warranty meeting requirements established by the U.S. Environmental Protection Agency (EPA) or the California Air Resources Board (CARB). Refer to the California Emission Control Warranty Statement supplied with your Product or contained in the engine manufacturer’s documentation for details.

Countries Other than the United States or Canada

Customers who have purchased Toro products outside the United States or Canada should contact their Toro Distributor (Dealer) to obtain guarantee policies for your country, province, or state. If for any reason you are dissatisfied with your Distributor's service or have difficulty obtaining guarantee information, contact the Toro importer. If all other remedies fail, you may contact us at Toro Warranty Company.

Australian Consumer Law: Australian customers will find details relating to the Australian Consumer Law either inside the box or at your local Toro Dealer.