Form No. 3415-336 Rev A

LED Light Kit

Serial Number 400000000 and After Greensmaster® 800, 1000, 1600, Flex™ 1820/2120, and eFlex® 1820/2120 Series Mower

Model No. 04063

Model No. 04064

Installation Instructions

⚠ WARNING

CALIFORNIA
Proposition 65 Warning

This product contains a chemical or chemicals known to the State of California to cause cancer, birth defects, or reproductive harm.

Use the appropriate model for your machine as follows:

- Model No. 04063—Greensmaster® 800, 1000, and 1600 series machines
- Model No. 04064—Greensmaster® Flex 1820/2120 or eFlex 1820/2120 series machines

Note: Determine the left, right, front, and back sides of the machine from the normal operating position.

Loose Parts

Use the chart below to verify that all parts have been shipped.

Procedure	Description	Qty.	Use
1	No parts required	–	Prepare the machine.
2	No parts required	–	Remove the control-panel cover (1820 or 2120 series machines).
3	LED light assembly Light mount Flange-head bolt (3/8 inch) Flange nut (3/8 inch)	2 2 4 2	Assemble the light mounts to the 800, 1000, and 1600 series machine.
4	LED light assembly Light mount Mount plate Flange-head bolt (3/8 inch) Flange-head bolt (5/16 x 1 inch) Flange-head bolt (5/16 x 1-1/2 inches) Flange locknut (5/16 inch) Flange nut (3/8 inch) Flange nut (5/16 inch) Washer	2 2 1 1 1 4 4 1 1 4	Assemble the light mounts to the 1820 or 2120 series machine.
5	Wire harness	2	Assemble the wire harnesses to the machine.
6	2-position rocker switch	1	Install the light switch.
7	Cable tie	10	Install the cable ties.
8	No parts required	–	Finish the light kit installation.

© 2017—The Toro® Company
8111 Lyndale Avenue South
Bloomington, MN 55420

Register at www.Toro.com.

CE

Original Instructions (EN)
Printed in the USA
All Rights Reserved

3415-336 A

1

Preparing the Machine

No Parts Required

Disconnecting the Spark-Plug Wire

800, 1000, and 1600 Series Machines

1. Ensure that the reel-drive lever is in the DISENGAGE position; refer to the *Operator's Manual*.
2. Move the machine to a level surface and set the traction-drive lever to the NEUTRAL position; refer to the *Operator's Manual*.
3. Set the throttle control to the SLOW position and push the On-Off switch to the OFF position; refer to the *Operator's Manual*.
4. Engage the service brake and hold in place with the parking-brake knob; refer to the *Operator's Manual*.
5. Remove the spark-plug wire from the terminal of the spark plug (Figure 1).

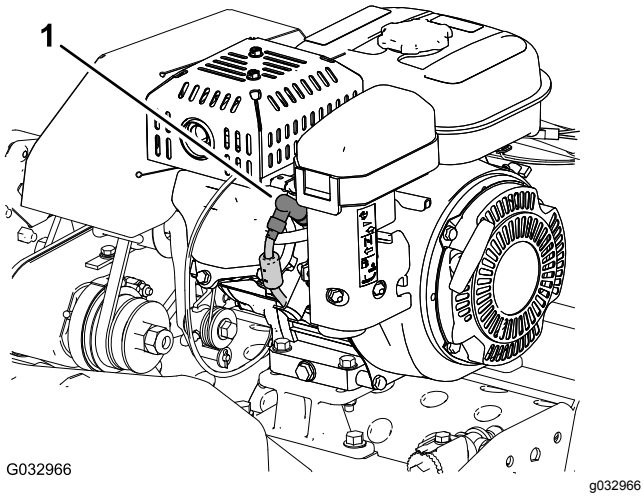

Figure 1

1. Spark-plug wire

Disconnecting the Spark-Plug Wire

Flex 1820 and 2120 Series Machines

1. Ensure the traction and reel drive engagement lever is in the DISENGAGE position; refer to the *Operator's Manual*.
2. Move the machine to a level surface and set the traction and reel drive engagement lever to the NEUTRAL position; refer to the *Operator's Manual*.
3. Set the throttle control to the SLOW position and push the On-Off switch to the OFF position; refer to the *Operator's Manual*.
4. Pull the service brake lever back and hold in place with the parking-brake latch; refer to the *Operator's Manual*.
5. Remove the spark-plug wire from the terminal of the spark plug (Figure 1).

Disconnecting the Battery

eFlex 1820 and 2120 Series Machines

1. Ensure the traction and reel drive engagement lever is in the DISENGAGE position; refer to the *Operator's Manual*.
2. Move the machine to a level surface and set the traction and reel drive engagement lever to the NEUTRAL position; refer to the *Operator's Manual*.
3. Rotate the key switch to the OFF position; refer to the *Operator's Manual*.
4. Pull the service brake lever back and hold in place with the parking brake latch; refer to the *Operator's Manual*
5. Wait 10 to 15 minutes for the motor capacitors to discharge.
6. Disconnect the T-handle connector of the battery adapter wire harness from the P04 connector of the battery wire harness (Figure 2).

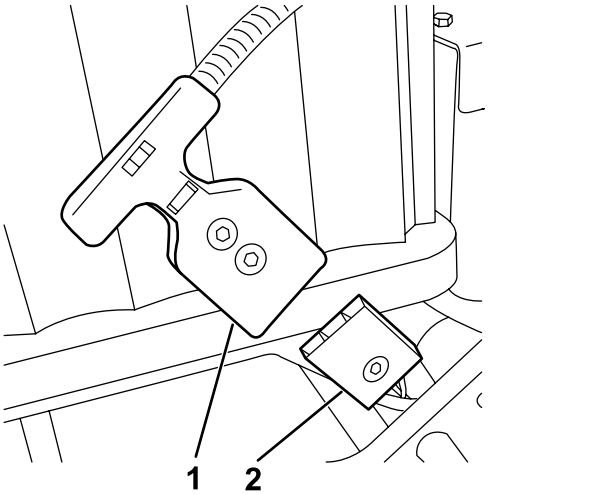

Figure 2

1. P04 T-handle connector (battery adapter wire harness)
2. P04 connector (battery wire harness)

2

Removing the Control-Panel Cover

1820 or 2120 Series Machines

No Parts Required

Procedure

1. Remove the 4 flange-head screws (1/4 x 1/2 inch) that secure the control-panel cover to the support bracket of the handle bar (Figure 3).

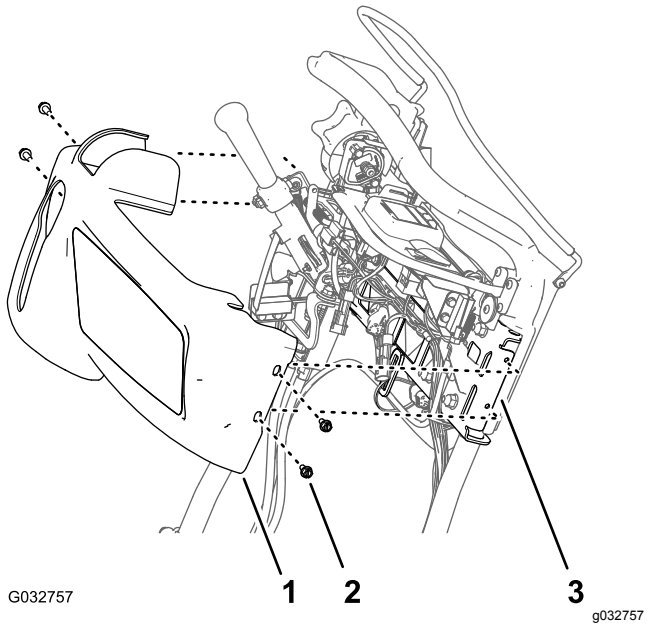

Figure 3

1. Control-panel cover
2. Flange-head screw (1/4 x 1/2 inch)
3. Support bracket (handle bar)

2. Move the control panel cover up and forward from the control panel, and remove the cover from the machine (Figure 3).

   Note: Retain the flange-head screws and control-panel cover for assembly in Installing the Control-Panel Cover (page 14).

3

Assembling the Light Mounts to the 800, 1000, and 1600 Series Machine

Parts needed for this procedure:

2	LED light assembly
2	Light mount
4	Flange-head bolt (3/8 inch)
2	Flange nut (3/8 inch)

Procedure

1. Remove and discard the bolt from the upper frame of both side plates as shown in Figure 4.

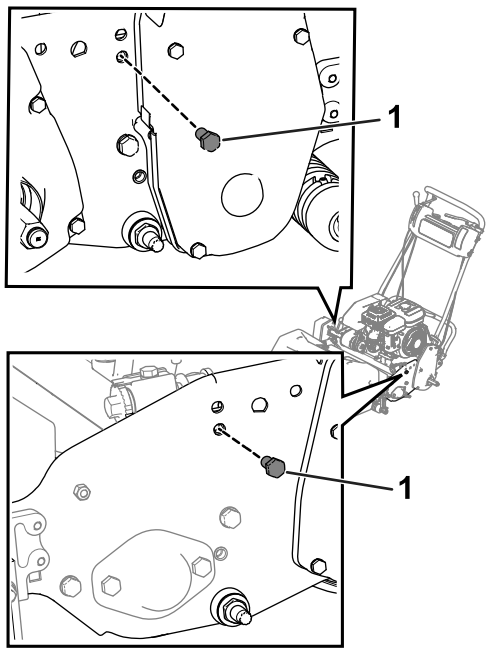

Figure 4

1. Bolt

2. Loosen the bolts on the right reel drive cover, then raise the cover (Figure 5).

   Important: **Loosen, but do not remove the bolts.**

   Note: Raising the cover will allow you to use a wrench to tighten the bolt that is closest to the cover.

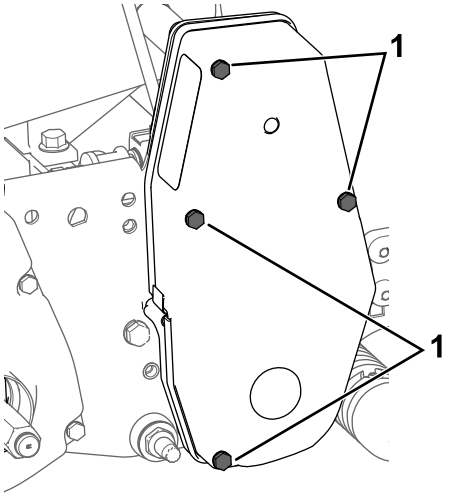

g207878

Figure 5

1. Bolt—loosen

3. Use 4 flange-head bolts (3/8 inch) and 2 flange nuts (3/8 inch) to secure the light mounts to both side plates (Figure 6).

   Note: Ensue that the throttle cable is routed behind the light mount.

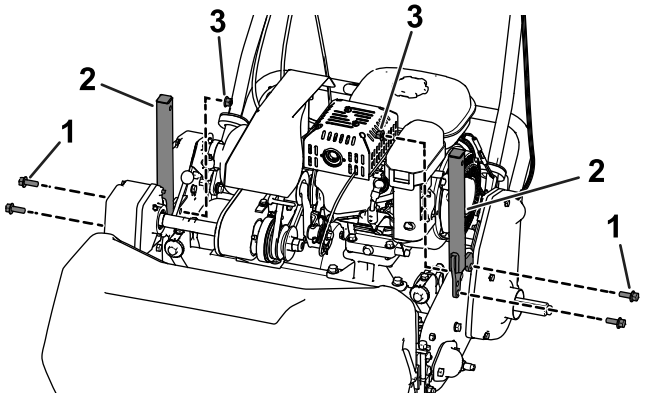

g206126

Figure 6

1. Flange-head bolt (3/8 inch)
2. Light mount
3. Flange nut (3/8 inch)

4. Remove the nut and the washer from each LED light assembly, then use the nut and the washer to secure the LED lights to each light mount (Figure 7).

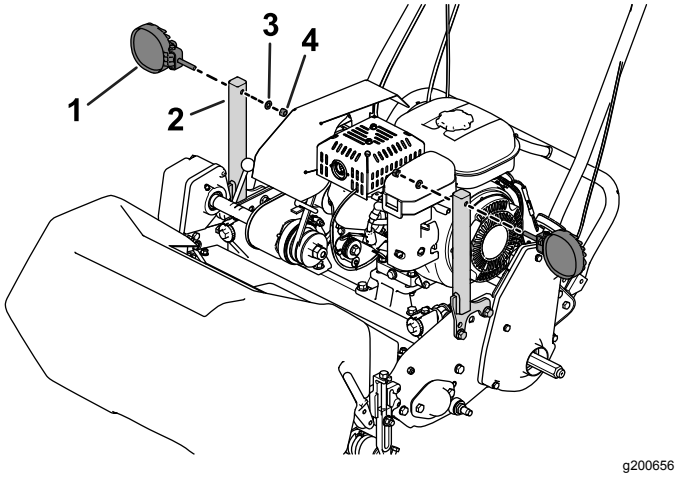

g200656

Figure 7

1. LED light
2. Light mount
3. Washer
4. Nut

4

Assembling the Light Mounts to the 1820 or 2120 Series Machine

Parts needed for this procedure:

2	LED light assembly
2	Light mount
1	Mount plate
1	Flange-head bolt (3/8 inch)
1	Flange-head bolt (5/16 x 1 inch)
4	Flange-head bolt (5/16 x 1-1/2 inches)
4	Flange locknut (5/16 inch)
1	Flange nut (3/8 inch)
1	Flange nut (5/16 inch)
4	Washer

Procedure

1. Use 2 flange-head bolts (5/16 x 1-1/2 inches), 2 washers, and 2 flange nuts (5/16 inch) to secure the mount plate to the left side plate (Figure 8 or Figure 9).

- **Flex/eFlex 1820 machines:** position the mount plate to the **outside** of the left side plate (Figure 8).
- **Flex/eFlex 2120 machines:** position the mount plate to the **inside** of the left side plate (Figure 9).

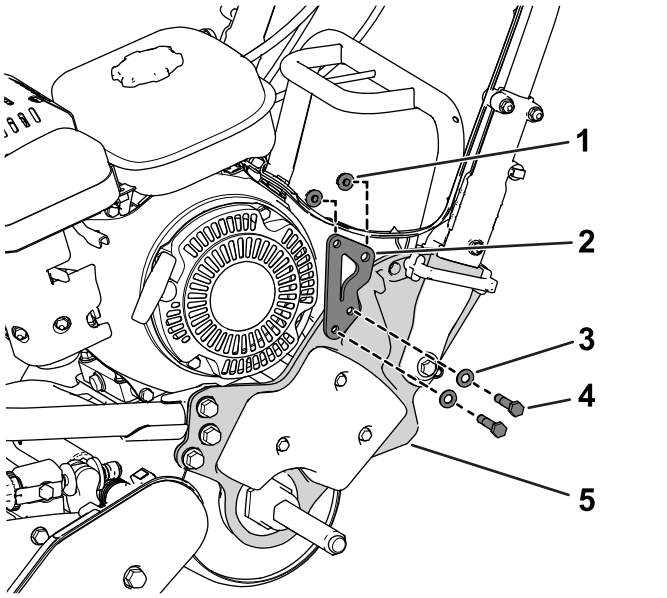

Figure 8

Flex/eFlex 1820 Machine Shown

1. Flange locknut (5/16 inch)
2. Mount plate
3. Washer
4. Flange-head bolt (5/16 x 1-1/2 inches)
5. Left side plate

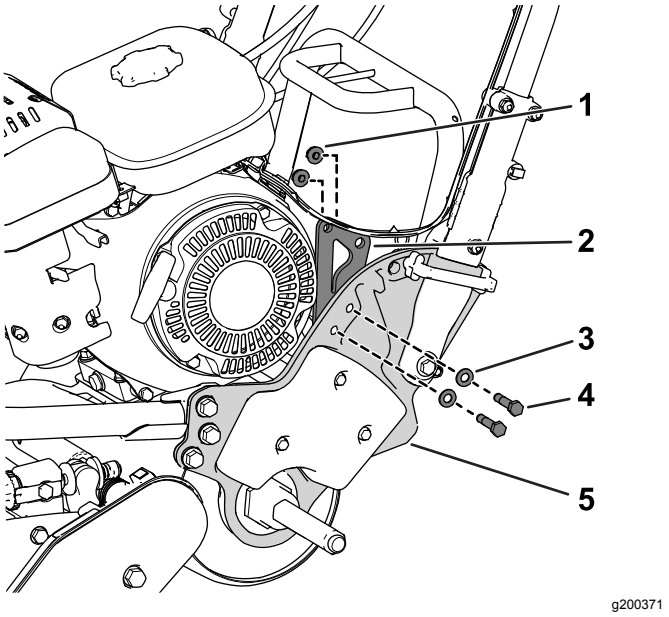

Figure 9

Flex/eFlex 2120 Machine Shown

1. Flange locknut (5/16 inch)
2. Mount plate
3. Washer
4. Flange-head bolt (5/16 x 1-1/2 inches)
5. Left side plate

2. Use 1 flange-head bolt (3/8 inch), 1 flange-head bolt (5/16 x 1 inch), 1 flange nut (3/8 inch), and 1 flange nut (5/16 inch) to secure a light mount to the mount plate (Figure 10).

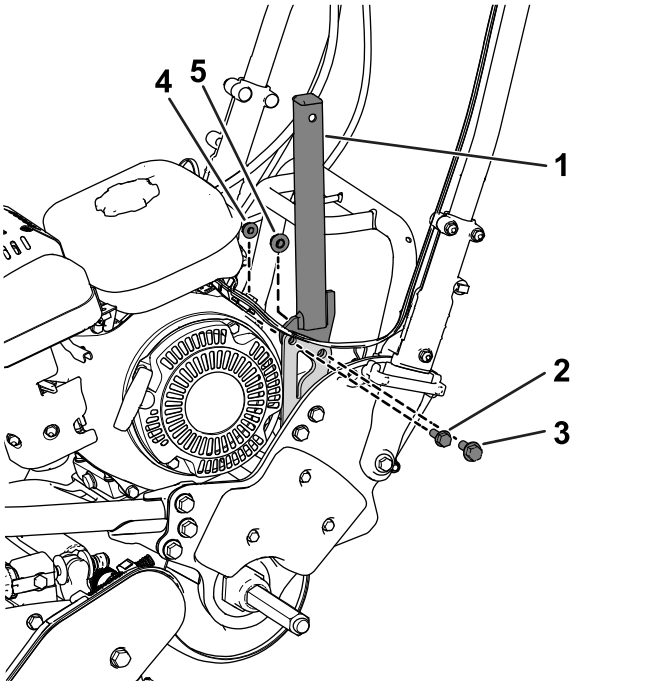

g206120

Figure 10

Flex/eFlex 2120 Machine Shown

1. Light mount
2. Flange-head bolt (5/16 x 1 inch)
3. Flange-head bolt (3/8 inch)
4. Flange nut (5/16 inch)
5. Flange nut (3/8 inch)

3. Use 2 flange-head bolts (5/16 x 1-1/2 inches), 2 washers, and 2 flange nuts (5/16 inch) to secure a light mount to the right drive housing (Figure 11).

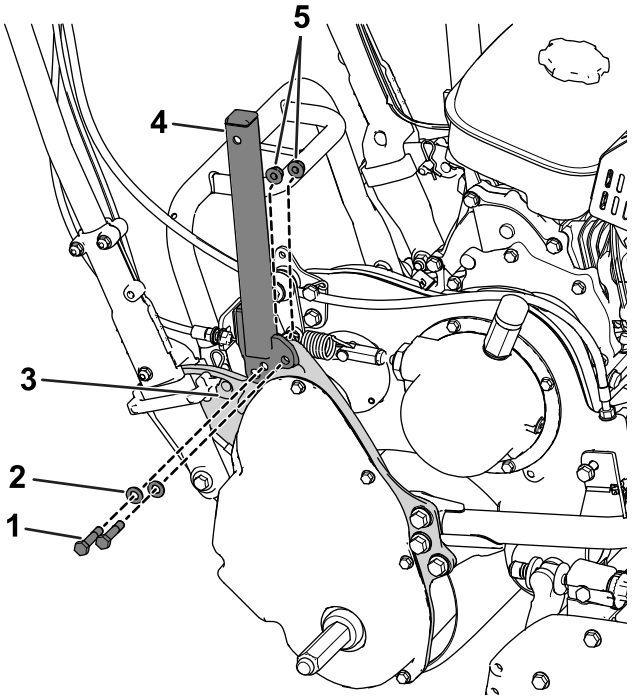

g206121

Figure 11

1. Flange-head bolt (5/16 x 1-1/2 inch)
2. Washer
3. Drive housing
4. Light mount
5. Flange locknut (5/16 inch)

4. Remove the nut and the washer from each LED light assembly, then use the nut and the washer to secure the LED lights to each light mount (Figure 12).

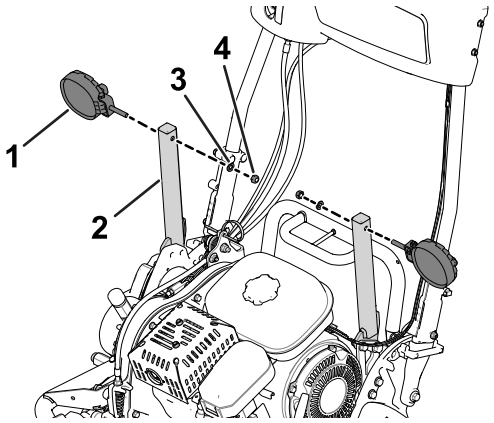

g200370

Figure 12

1. LED light
2. Light mount
3. Washer
4. Nut

5

Assembling the Wire Harnesses to the Machine

Parts needed for this procedure:

2	Wire harness

Attaching the Wire Harnesses to the LED Lights

1. Connect the 2-pin connector of the LED light into the 2-socket connector of the LED light harness (Figure 13).

   Ensure that the connectors are fully seated and the latch of the connectors snap together securely.

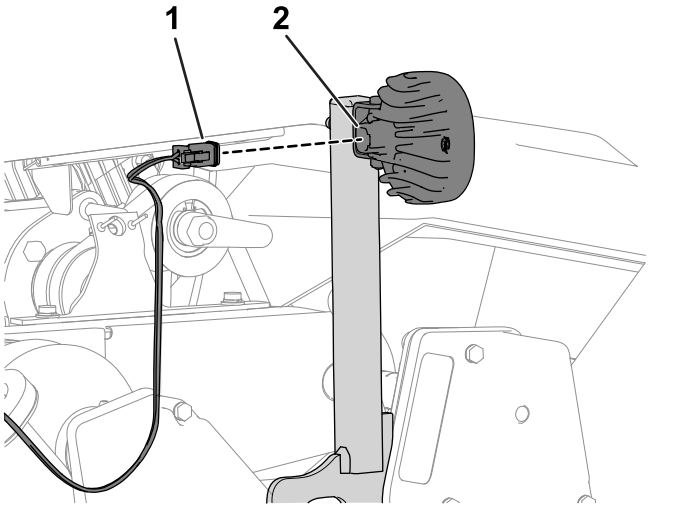

Figure 13

1. 2-socket connector (wire harness)
2. 2-pin connector (LED light)

2. Repeat step 1 for the other wire harness and LED light.

Routing the Wire Harness

Route the wire harnesses down each light mount and up each handle as shown in Figure 14.

Note: Ensure that the wire harnesses are routed below the differential axle shaft (Figure 15).

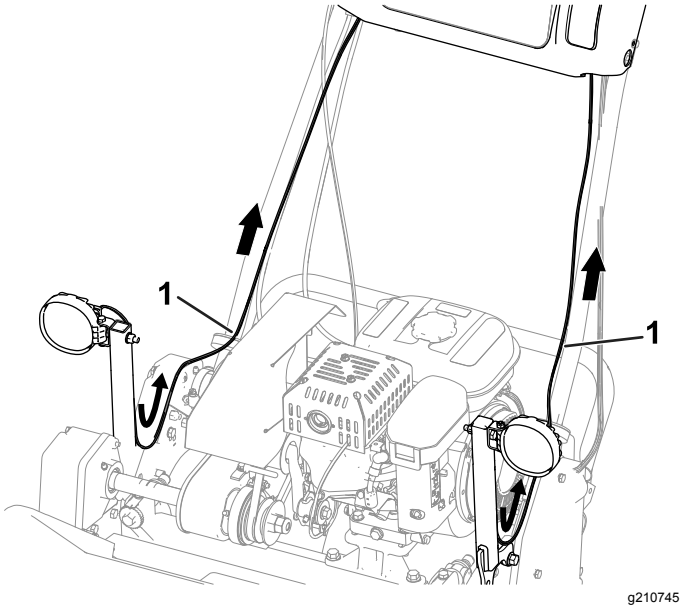

Figure 14

800, 1000, and 1600 Series Machine shown

1. Wire harness

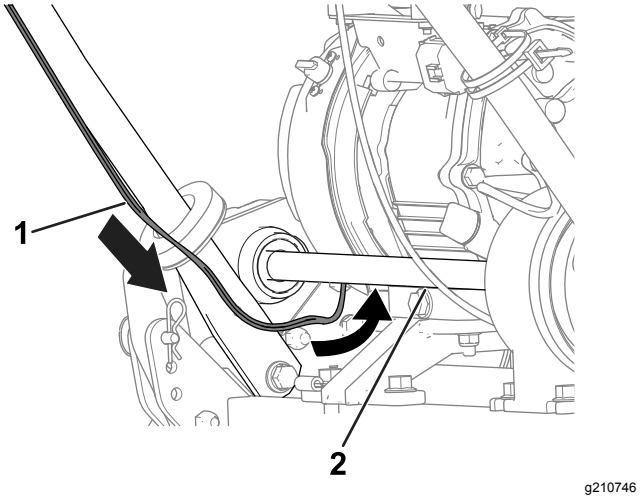

Figure 15

800, 1000, and 1600 Series Machine shown

1. Wire harness
2. Differential axle shaft

Connecting the LED Light Wire Harnesses to the Machine Wire Harness

800, 1000, and 1600 Series Machines

Note: Perform the following steps for the LED light wire harnesses on both sides of the machine.

1. At the back of the console, remove the plug from the 2-socket connector of the machine wire harness (Figure 16).

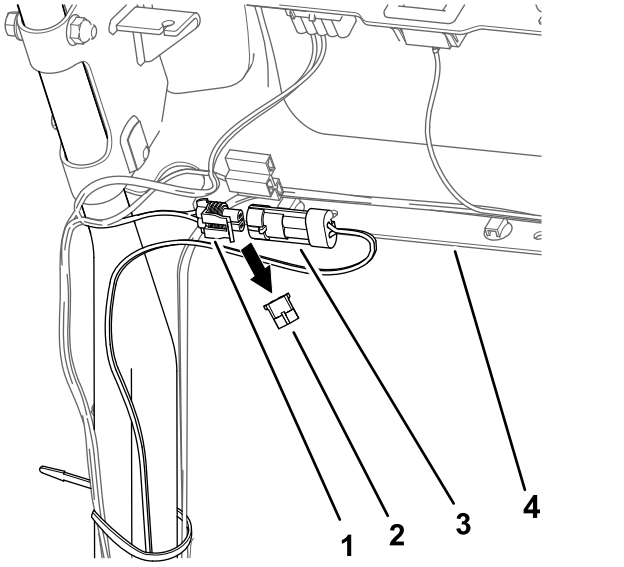

g206149

Figure 16

Left side of the machine shown

1. 2-socket connector (wire harness—machine)
2. Plug
3. 2-pin connector (wire harness—LED light kit)
4. Console

2. Connect the 2-pin connector of the LED light wire harness to the 2-socket connector of the machine wire harness (Figure 16).

   Ensure that the connectors are fully seated and the latch of the connectors snap together securely.

3. Perform the previous steps for the wire harness on the other side of the machine (Figure 17).

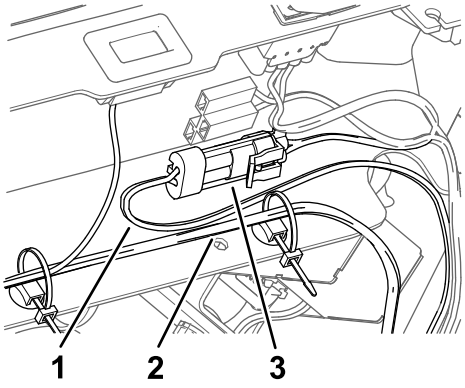

g210747

Figure 17

1. Wire harness—LED light kit
2. Wire harness—machine
3. Installed 2-pin connector and 2-socket connector

Connecting the LED Light Wire Harnesses to the Machine Wire Harness

Flex 1820 and 2120 Series Machines

Note: Perform the following steps for the LED light wire harnesses on both sides of the machine.

1. At the front of the console, remove the plug from the 2-socket connector of the machine wire harness (Figure 18).

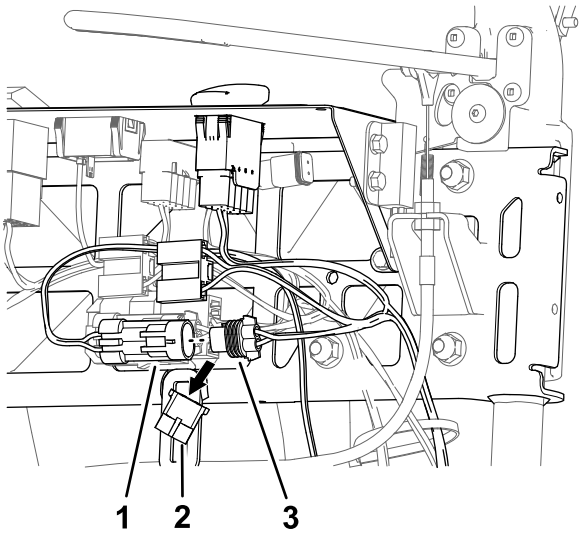

g210534

Figure 18

Left side of the machine shown

1. 2-pin connector (wire harness—LED light kit)
2. Plug
3. 2-socket connector (wire harness—machine)

2. Connect the 2-pin connector of the LED light wire harness to the 2-socket connector of the machine wire harness (Figure 18).

   Ensure that the connectors are fully seated and the latch of the connectors snap together securely.

3. Perform the previous steps for the wire harness on the other side of the machine (Figure 19).

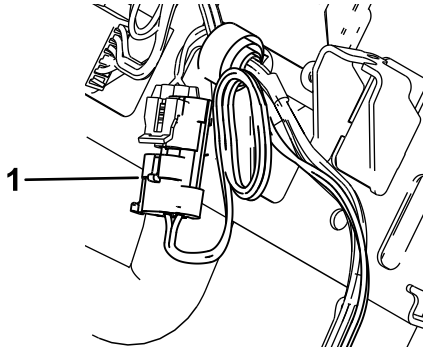

g210792

Figure 19

1. Installed 2-pin connector (wire harness—LED light kit)

Connecting the LED Light Wire Harnesses to the Machine Wire Harness

eFlex 1820 and 2120 Series Machines

Note: Perform the following steps for the LED light wire harnesses on both sides of the machine.

1. At the front of the console, remove the plug from the 2-socket connector of the machine wire harness (Figure 20).

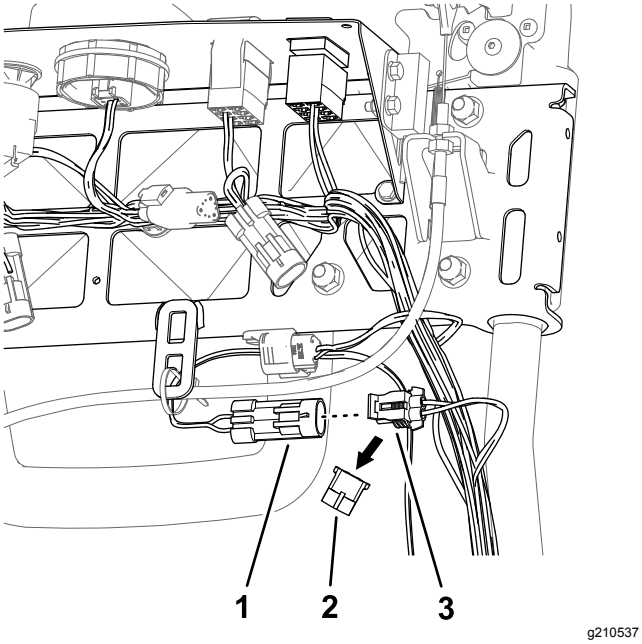

g210537

Figure 20

Left side of the machine shown

1. 2-pin connector (wire harness—LED light kit)
2. Plug
3. 2-socket connector (wire harness—machine)

2. Connect the 2-pin connector of the LED light wire harness to the 2-socket connector of the machine wire harness (Figure 20).

   Ensure that the connectors are fully seated and the latch of the connectors snap together securely.

3. Perform the previous steps for the wire harness on the other side of the machine (Figure 21).

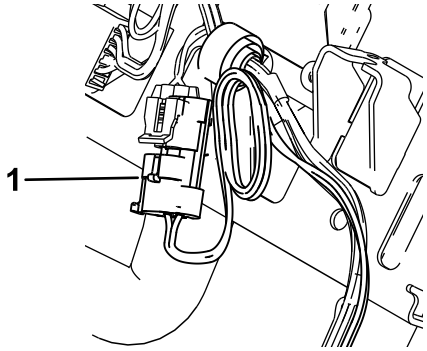

g210792

Figure 21

1. Installed 2-pin connector (wire harness—LED light kit)

6

Installing the Light Switch

Parts needed for this procedure:

1	2-position rocker switch

Installing the Light Switch (800, 1000, and 1600 Series Machines)

1. If equipped, remove the plug from the opening at the left face of the control panel (Figure 22).

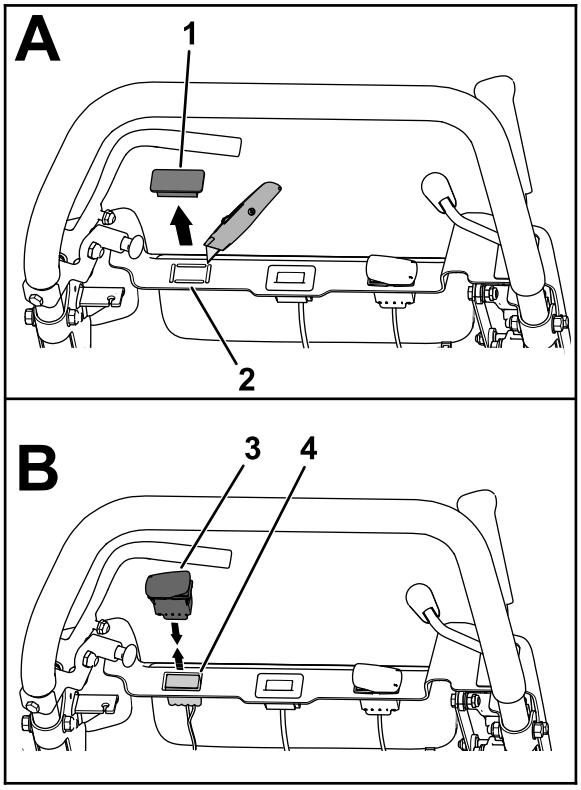

g207838

Figure 22

1. Plug
2. Knock-out plug
3. 2-position rocker switch
4. 10-socket connector

2. Create an opening for the switch by removing the knock-out plug if equipped.
3. Pull up the 10-socket connnector of the machine wire harness through the opening in the control panel (Figure 22).
4. Connect the 10-pin connector of the 2-position rocker switch into the 10-socket connector of the wire harness for the machine (Figure 22).

   Ensure that the connectors are fully seated and the latch of the connectors snap together securely.
5. Align the switch so that the notch in the switch body is toward the left side of the control panel (Figure 23).

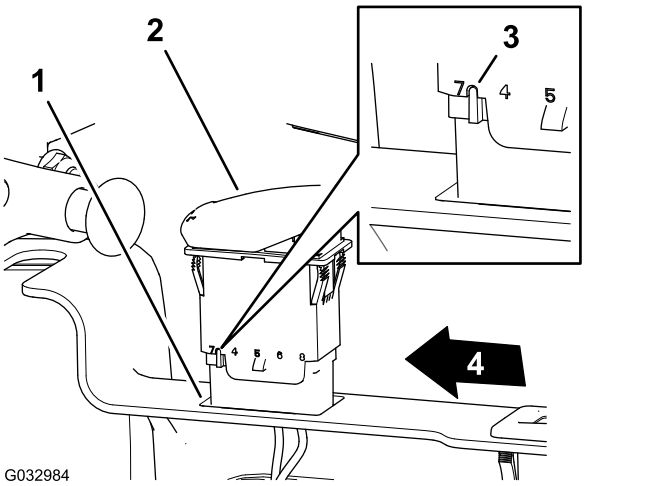

Figure 23

1. Opening (control panel)
2. 2-position rocker switch
3. Notch (body—rocker switch)
4. Left side of the control panel

6. Insert the switch into the opening in the control panel until the switch snaps securely into the panel (Figure 23).

Installing the Light Switch (eFlex/Flex 1820 and 2120 Series Machines)

1. Remove the plug from the opening at the left face of the control panel (Figure 24 or Figure 25).

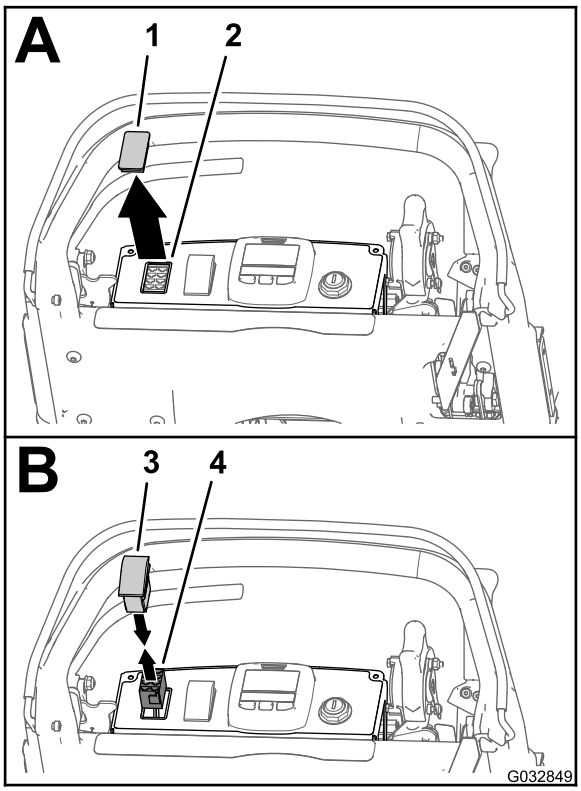

g032849

Figure 24

eFlex 1820/2120 Machine Shown

1. Plug
2. Opening (control panel)
3. 2-position rocker switch
4. 8-socket connector (wire harness—LED light and wireless hour meter harness kit)

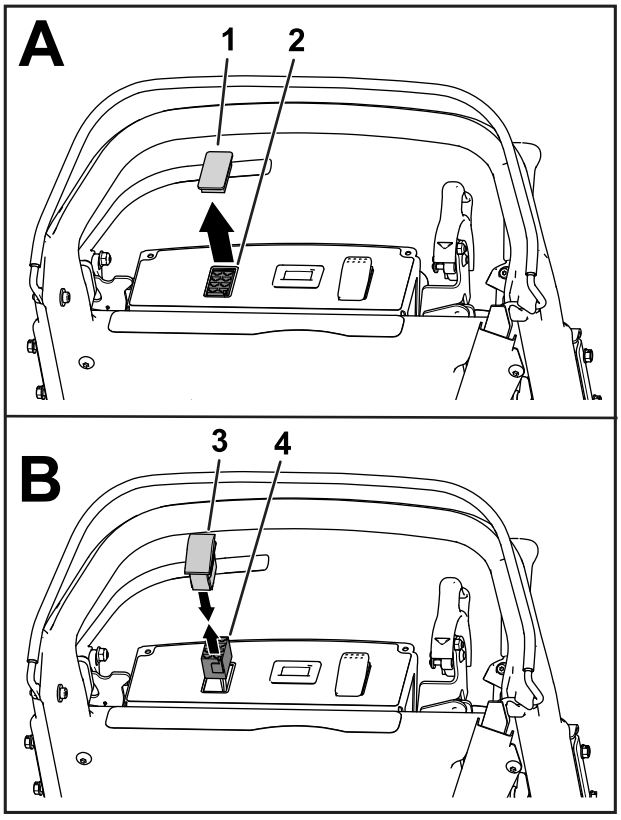

g208352

Figure 25

Flex 1820/2120 Machine Shown

1. Plug
2. Opening (control panel)
3. 2-position rocker switch
4. 8-socket connector (wire harness—LED light and wireless hour meter harness kit)

2. Pull up the 8-socket connector of the wire harness for the machine through the opening in the control panel (Figure 24 or Figure 25).
3. Connect the 8-pin connector of the 2-position rocker switch into the 8-socket connector of the wire harness for the machine (Figure 24 or Figure 25).

   Ensure that the connectors are fully seated and the latch of the connectors snap together securely.
4. Align the switch so that the notch in the body of the switch is toward the back of the control panel (Figure 26).

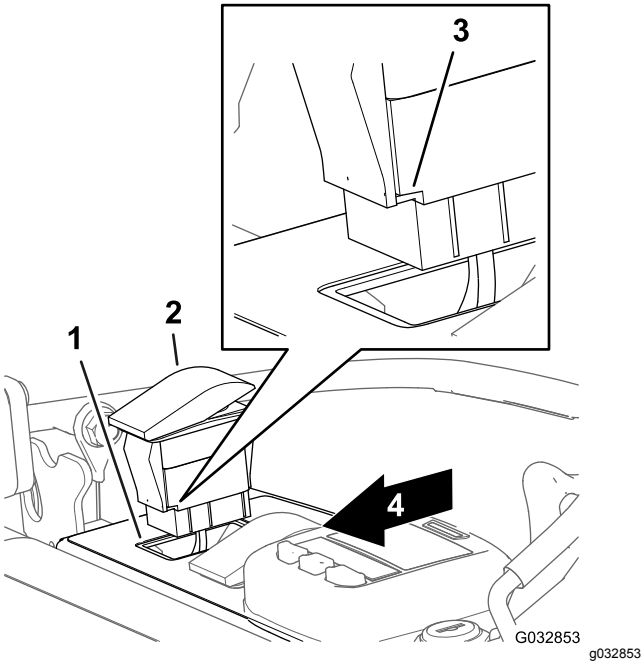

Figure 26

eFlex 1820/2120 Machine Shown

1. Opening (control panel)
2. Rocker switch
3. Notch (body—rocker switch)
4. Back of the control panel

5. Insert the switch into the opening in the control panel until the switch snaps securely into the panel (Figure 26).

7

Installing the Cable Ties

Parts needed for this procedure:

10	Cable tie

Procedure

Important: **As you install the cable ties, ensure that the wire harnesses have enough slack to prevent stress points and are free from any moving parts**

1. Use 8 cable ties to secure the wire harnesses to the machine (Figure 27).

   Note: Attach 4 cable ties to the light mounts and 4 cable ties to the handle.

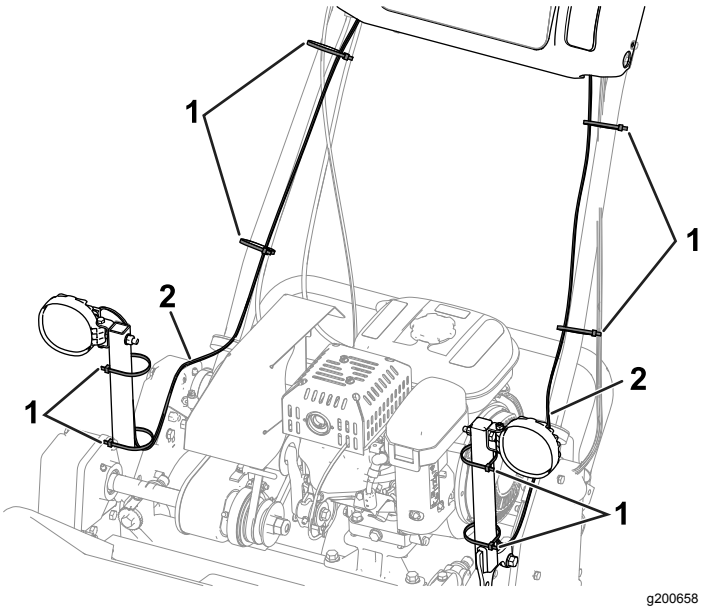

Figure 27

800, 1000, and 1600 Series Machine shown

1. Cable tie (8)
2. Wire harness

2. Use the remaining 2 cable ties as follows:
   - **800, 1000, and 1600 Series machines:**

     Secure the LED light kit wire harness to the harness of the machine with as shown in Figure 28.

     Note: Perform this step for both sides of the machine.

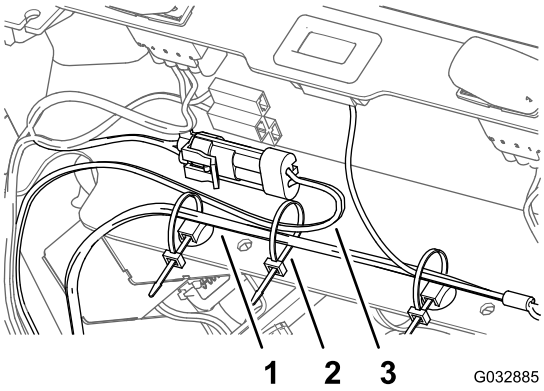

Figure 28

Left side of the machine shown

1. Wire harness (machine)
2. Cable tie
3. Wire harness (LED light kit)

- **eFlex/Flex 1820 and 2120 Series machines:**

  Use a cable tie to bundle the remaining length of the wire harness together (Figure 29).

  Note: Perform this step for both sides of the machine.

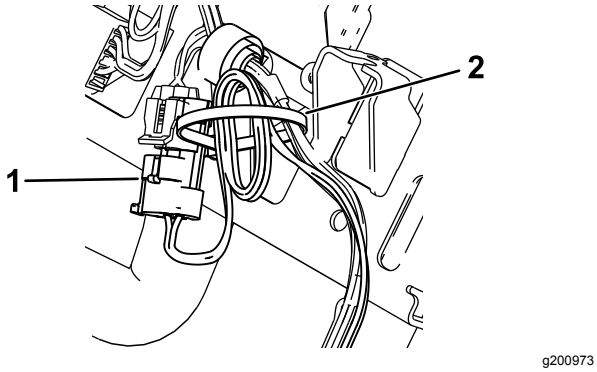

Figure 29

Left side of the machine shown

1. Installed 2-pin connector (wire harness—LED light kit)
2. Cable tie

8

Finishing the Light Kit Installation

No Parts Required

Installing the Control-Panel Cover

1820 or 2120 Series Machines

1. Align the keyhole slot in the control-panel cover over the traction and reel drive handle (Figure 30).

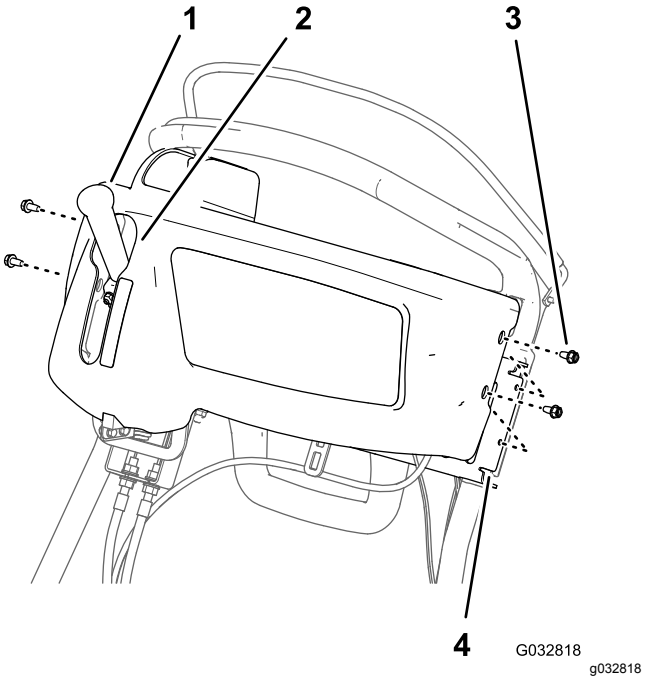

Figure 30

1. Traction and reel drive handle
2. Keyhole slot (control-panel cover)
3. Flange-head screw (1/4 x 1/2 inch)
4. Support bracket (handle bar)

2. Align the holes in the control-panel cover to the holes in the support bracket of the handle bar (Figure 30).
3. Assemble the cover to the bracket (Figure 30) with the 4 flange-head screws (1/4 x 1/2 inch) that you removed in 2 Removing the Control-Panel Cover (page 3).

Connecting the Spark-Plug Wire

800, 1000, 1600, and Flex 1820 and 2120 Series Machines

Connect the spark-plug wire to the terminal of the spark plug; refer to Figure 1 of Disconnecting the Spark-Plug Wire (page 2).

Connecting the Battery

eFlex 1820 and 2120 Series Machines

Connect the T-handle connector of the battery adapter-wire harness to the P04 connector of the battery wire harness; refer to Figure 2 of Disconnecting the Battery (page 2).

Operation

Operating the Light Switch

Press the rocker switch to turn the LED lights to the ON or OFF position; refer to Figure 31.

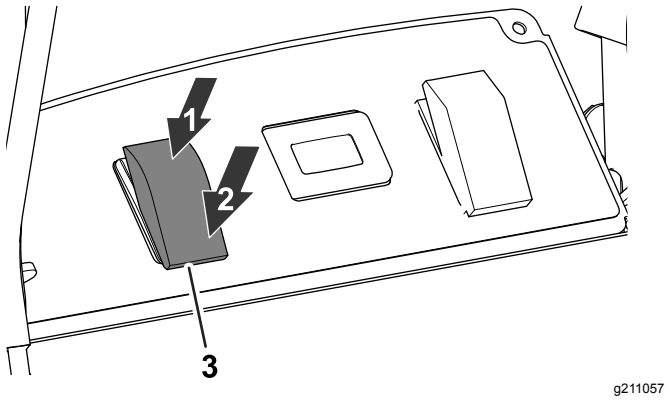

Figure 31

1. ON position
2. OFF position
3. LED light switch

Using the LED Light Kit with the Wireless Hour Meter Kit

If the LED light kit is used with the wireless hour meter kit, refer to the wireless hour meter kit.

Note: The use of the LED light kit with the wireless hour meter kit may cause the LED lights to flicker slightly at low idle.



Count on it.