Form No. 3415-634 Rev A

Power Clear® 721 R-C Commercial Snowthrower

Model No. 38751—Serial No. 402082000 and Up

Operator's Manual

Introduction

This machine is intended to be used by residential homeowners. It is designed primarily for removing snow from paved surfaces, such as driveways and sidewalks, and other surfaces for traffic on residential or commercial properties. It is not designed for removing materials other than snow, nor is it designed for clearing gravel surfaces.

Note: The machine may leave rubber marks on new brushed or light-colored concrete. Test on an inconspicuous location before use.

Read this information carefully to learn how to operate and maintain your product properly and to avoid injury and product damage. You are responsible for operating the product properly and safely.

You may contact Toro directly at www.Toro.com for product safety and operation training materials, accessory information, help finding a dealer, or to register your product.

Whenever you need service, genuine Toro parts, or additional information, contact an Authorized Service Dealer or Toro Customer Service and have the model and serial numbers of your product ready. Figure 1 identifies the location of the model and serial numbers on the product. Write the numbers in the space provided.

Important: **With your smartphone or tablet, scan the QR code on the serial number decal to access warranty, parts, and other product information.**

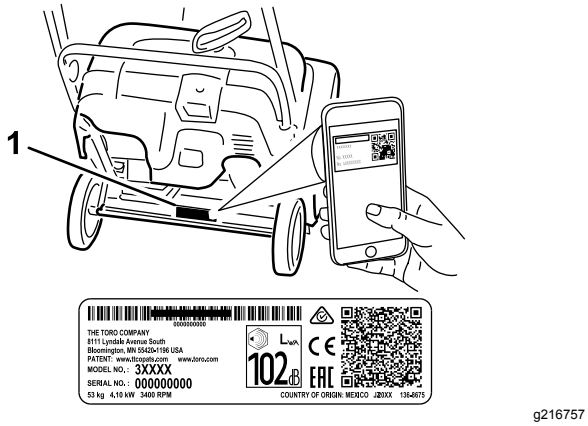

g216757

Figure 1

1. Model and serial number location

Model No. _____

Serial No. _____

This manual identifies potential hazards and has safety messages identified by the safety-alert symbol (Figure 2), which signals a hazard that may cause serious injury or death if you do not follow the recommended precautions.



g000502

Figure 2

1. Safety-alert symbol

This manual uses 2 words to highlight information. **Important** calls attention to special mechanical information and **Note** emphasizes general information worthy of special attention.

⚠ WARNING

CALIFORNIA
Proposition 65 Warning

This product contains a chemical or chemicals known to the State of California to cause cancer, birth defects, or reproductive harm.

The engine exhaust from this product contains chemicals known to the State of California to cause cancer, birth defects, or other reproductive harm.

Important: **If you are using this machine above 1500 m (5,000 ft) for a continuous period, ensure that the High Altitude Kit has been installed so that the engine meets CARB/EPA emission regulations. The High Altitude Kit increases engine performance while preventing spark-plug fouling, hard starting, and increased emissions. Once you have installed the kit, attach the high-altitude label next to the serial decal on the machine. Contact any Authorized Toro Service Dealer to obtain the proper High Altitude Kit and high-altitude label for your machine. To locate a dealer convenient to you, access our website**

© 2017—The Toro® Company
8111 Lyndale Avenue South
Bloomington, MN 55420

Register at www.Toro.com.

Original Instructions (EN)
Printed in Mexico
All Rights Reserved

3415-634 A

at www.Toro.com or contact our Toro Customer Care Department at the number(s) listed in your Emission Control Warranty Statement.

Remove the kit from the engine and restore the engine to its original factory configuration when running the engine under 1500 m (5,000 ft). Do not operate an engine that has been converted for high-altitude use at lower altitudes; otherwise, you could overheat and damage the engine.

If you are unsure whether or not your machine has been converted for high-altitude use, look for the following label (Figure 3).

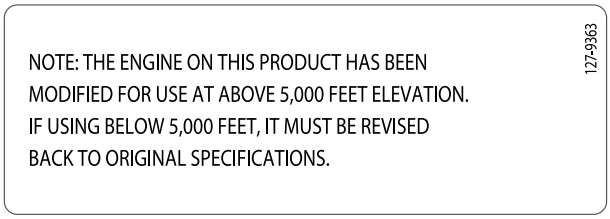

Figure 3

It is a violation of California Public Resource Code Section 4442 or 4443 to use or operate the engine on any forest-covered, brush-covered, or grass-covered land unless the engine is equipped with a spark arrester, as defined in Section 4442, maintained in effective working order or the engine is constructed, equipped, and maintained for the prevention of fire.

Contents

Introduction 1
Safety 2
General Safety 2
Safety and Instructional Decals 3
Setup 4
Unfolding the Handle 4
Installing the Discharge Chute 4
Filling the Engine with Oil 4
Adjusting the Control Cable 4
Product Overview 5
Operation 5
Before Operation 5
Before Operation Safety 5
Filling the Fuel Tank 6
Checking the Engine-Oil Level 6
During Operation 7
During Operation Safety 7
Starting the Engine 7
Engaging the Rotor Blades 8
Disengaging the Rotor Blades 8
Shutting Off the Engine 9
Adjusting the Discharge Chute and Chute Deflector 9
Clearing a Clogged Discharge Chute 9
Operating Tips 9
After Operation 10
After Operation Safety 10
Preventing Freeze-up after Use 10
Maintenance 10
Recommended Maintenance Schedule(s) 10
Maintenance Safety 10
Adjusting the Control Cable 11
Inspecting the Rotor Blades 12
Changing the Engine Oil 12
Servicing the Spark Plug 14
Replacing the Drive Belt 15
Storage 17
Preparing the Machine for Storage 17

Safety

General Safety

This machine complies with ANSI B71.3 specifications.

- Read and understand the contents of this *Operator's Manual* before you start the engine. Ensure that everyone using this product knows how to use the product and understands the warnings.
- Do not put your hands or feet near moving components on the machine.
- Do not operate the machine without all guards and other safety protective devices in place and working on the machine.
- Keep clear of any discharge opening. Keep bystanders a safe distance away from the machine.
- Keep children out of the operating area. Never allow children to operate the machine.
- Shut off the engine before unclogging, servicing, or fueling the machine.

You can find additional items of safety information in their respective sections throughout this manual.

Safety and Instructional Decals

Safety decals and instructions are easily visible to the operator and are located near any area of potential danger. Replace any decal that is damaged or missing.

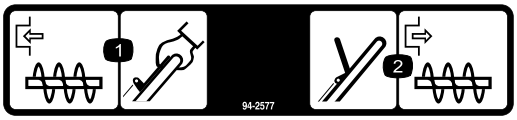

decal94-2577

94-2577

1. To engage the rotor blades, hold the control bar against the handle.
2. To disengage the rotor blades, release the control bar.

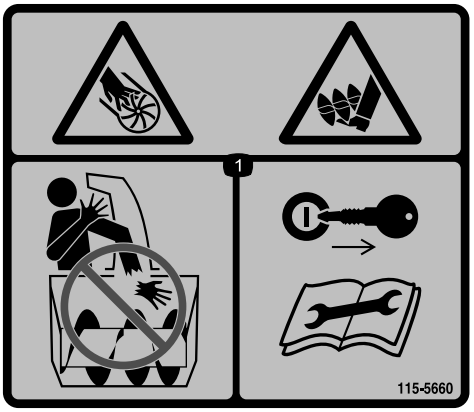

decal115-5660

115-5660

1. Cutting/dismemberment hazards of hand or foot, impeller and auger—do not place your hand in the chute; remove the ignition key and read the instructions before servicing or performing maintenance.

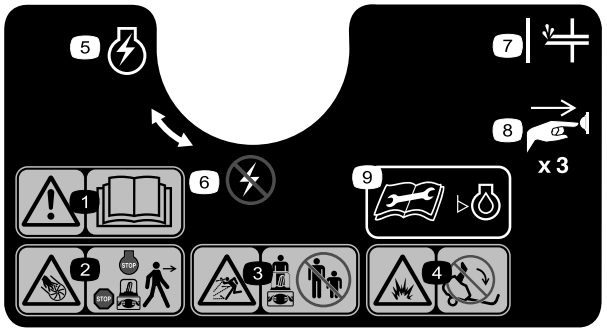

decal117-9102

117-9102 (Model 38741 only)

Order Part No. 117-6036

1. Warning—read the *Operator's Manual.*
2. Cutting/dismemberment hazard, impeller—shut off the engine and wait for the auger to stop before leaving the machine.
3. Thrown object hazard—keep bystanders a safe distance away from the machine.
4. Fuel spill hazard—do not tip machine backward.
5. Engine switch on
6. Engine switch off
7. Primer
8. Push the primer 3 times to prime the engine.
9. Read the *Operator's Manual* before checking the engine-oil level.

Setup

Unfolding the Handle

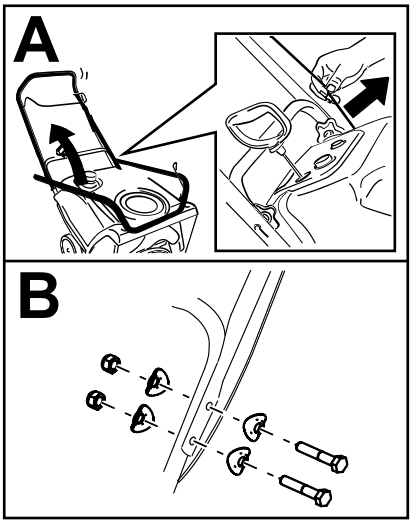

g217712

Installing the Discharge Chute

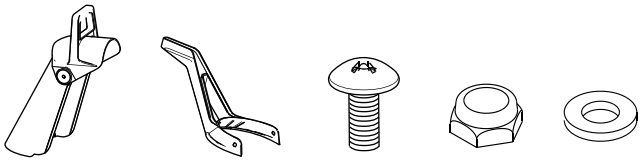

1x 1x 3x 3x 3x

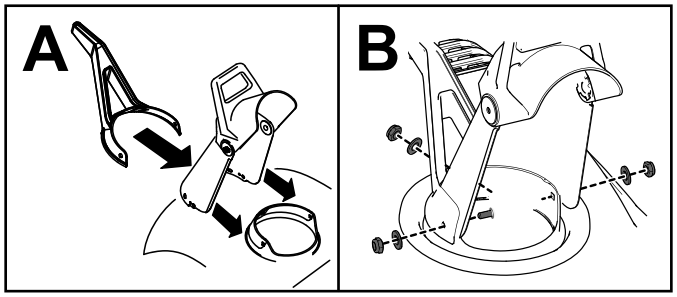

g217715

Filling the Engine with Oil

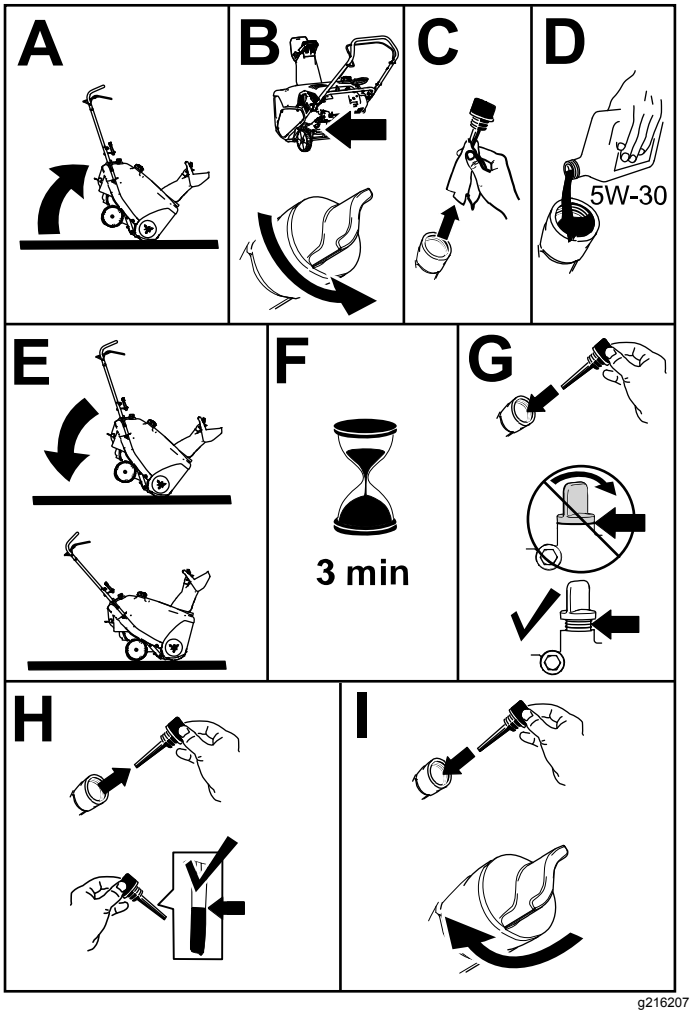

g216207

Figure 6

Adjusting the Control Cable

Refer to Adjusting the Control Cable (page 11).

Product Overview

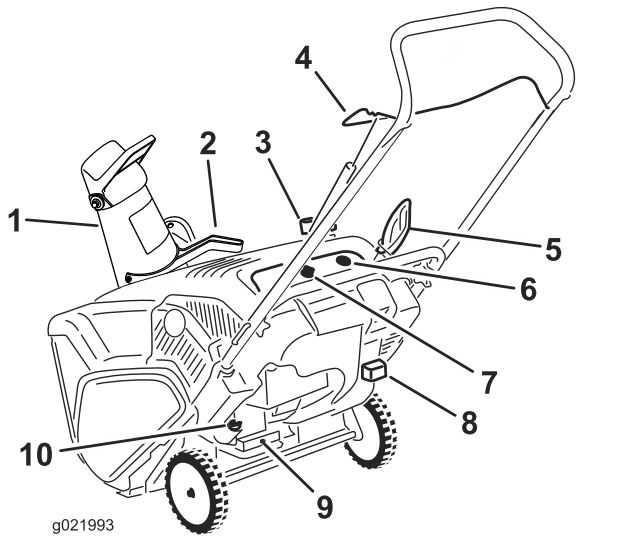

g021993

Figure 7

1. Discharge chute
2. Discharge-chute handle
3. Fuel-tank cap
4. Control bar
5. Recoil-start handle
6. Primer
7. Ignition key
8. Choke lever
9. Oil-drain plug
10. Oil-fill cap

Operation

Note: Determine the left and right sides of the machine from the normal operating position.

Before Operation

Before Operation Safety

- **For electric-start models only:** Use extension cords and receptacles as specified in the manual. Thoroughly inspect the electrical cord before plugging it into a power source. If the cord is damaged, do not use it. Replace the damaged cord. Unplug the power cord whenever you are not starting the machine.
- Wear adequate winter garments whenever you operate the machine. Wear substantial, slip-resistant footwear that improves footing on slippery surfaces. Avoid loose-fitting clothing that can get caught in moving parts.
- Always wear eye protection during operation or while performing an adjustment or repair to protect your eyes from foreign objects that the machine may throw.
- Thoroughly inspect the area where you will use the machine, and remove all doormats, sleds, boards, wires, and other foreign objects.
- If a shield, safety device, or decal is damaged, illegible, or missing, repair or replace it before beginning operation. Also tighten any loose fasteners.

⚠ DANGER

Fuel is extremely flammable and explosive. A fire or explosion from fuel can burn you and others.

- **To prevent a static charge from igniting the fuel, place the container and/or machine on the ground before filling, not in a vehicle or on an object.**
- **Fill the tank outdoors when the engine is cold. Wipe up spills.**
- **Do not handle fuel when smoking or around an open flame or sparks.**
- **Store fuel in an approved fuel container, out of the reach of children.**
- **Do not tip the machine either forward or backward with fuel in the fuel tank; otherwise, fuel may leak out of the machine.**

Filling the Fuel Tank

- For best results, use only clean, fresh (less than 30 days old), unleaded gasoline with an octane rating of 87 or higher ((R+M)/2 rating method).
- Oxygenated fuel with up to 10% ethanol or 15% MTBE by volume is acceptable.
- **Do not** use ethanol blends of gasoline (such as E15 or E85) with more than 10% ethanol by volume. Performance problems and/or engine damage may result which may not be covered under warranty.
- **Do not** use gasoline containing methanol.
- **Do not** store fuel either in the fuel tank or fuel containers over the winter unless you use a fuel stabilizer.
- **Do not** add oil to gasoline.

Do not fill above the bottom of the fuel tank (Figure 8).

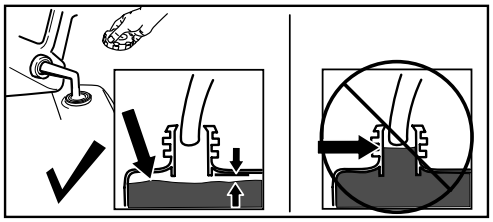

g216203

Figure 8

Note: For best results, purchase only the quantity of fuel that you expect to use in 30 days. Otherwise, you may add fuel stabilizer to newly purchased fuel to keep it fresh for up to 6 months.

Checking the Engine-Oil Level

Service Interval: Before each use or daily—Check the engine-oil level and add oil if necessary.

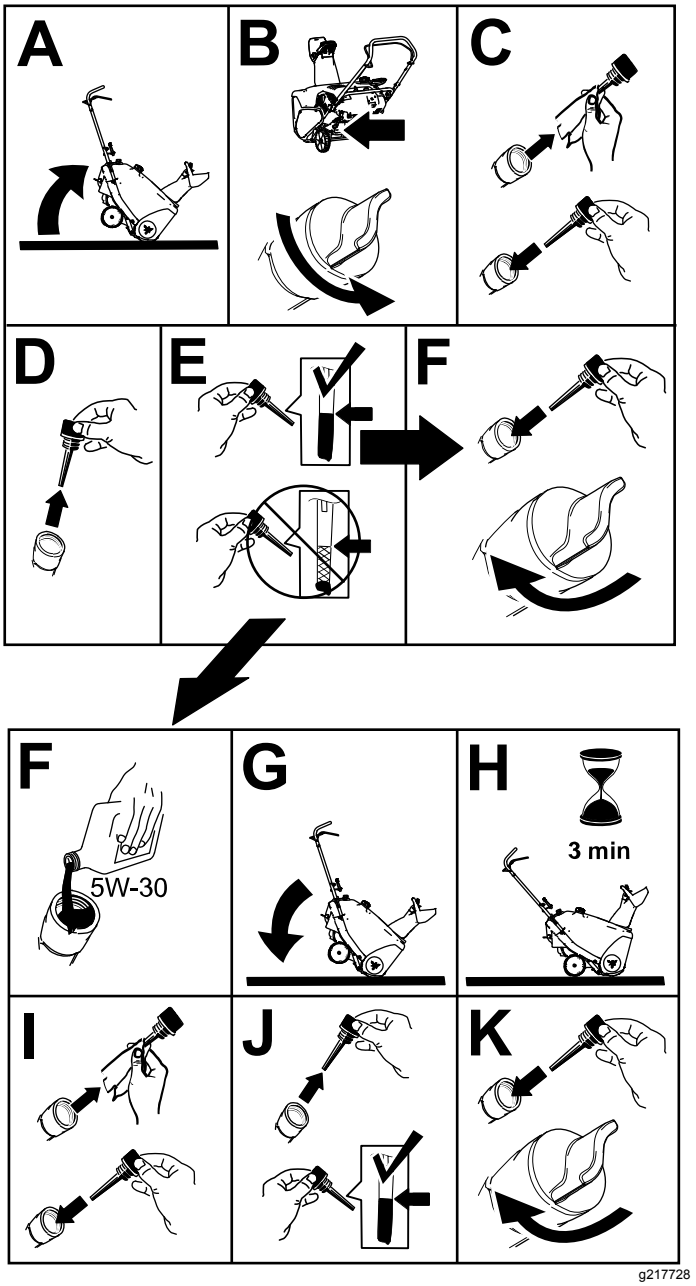

g217728

Figure 9

During Operation

During Operation Safety

- **Shut off the engine before unclogging the machine and always use a stick or the snow-cleanout tool (if provided).**
- **A rotating auger can injure hands or feet.** Stay behind the handles and away from the discharge opening while operating the machine. **Keep your face, hands, feet, and any other part of your body or clothing away from moving or rotating parts.**
- Never direct the discharge toward people or areas where property damage can occur.
- Exercise caution to avoid slipping or falling. Always be sure of your footing, and keep a firm hold on the handles. Walk; never run.
- Exercise extreme caution when operating on slopes.
- Never operate the machine without good visibility or light.
- Do not operate the machine while ill, tired, or under the influence of alcohol or drugs.
- Look behind and use care when backing up with the machine.
- When not actively clearing snow, disengage power to the auger.
- Exercise extreme caution when operating on or crossing gravel drives, walks, or roads. Stay alert for hidden hazards or traffic.
- Never attempt to make any adjustments while the engine is running.
- After striking a foreign object, shut off the engine, remove the ignition key (electric-start models only), thoroughly inspect the machine for any damage, and repair the damage before starting and operating the machine.
- If the machine should start to vibrate abnormally, shut off the engine and check for the cause.
- Do not run the engine indoors unless there is adequate ventilation (e.g., leaving an outside door open); exhaust fumes are dangerous.
- Do not overload the machine capacity by attempting to clear snow at too fast a rate.
- Never touch a hot engine or muffler.

Starting the Engine

1. Turn the ignition key clockwise to the ON position (Figure 10).

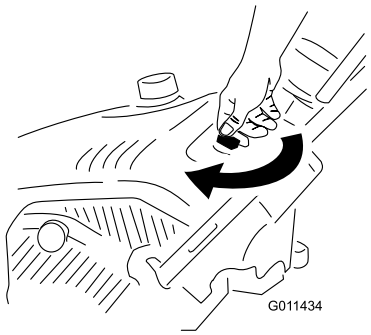

g011434

Figure 10

2. Pull out the choke lever (Figure 11 and Figure 12).

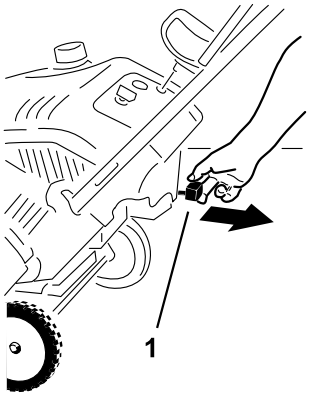

g217786

Figure 11

1. Choke lever

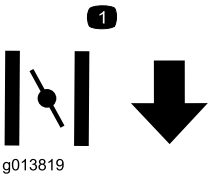

g013819

g013819

Figure 12

1. Symbols on the choke lever indicating to pull out the choke lever to activate the choke.

3. Firmly push in the primer with your thumb as indicated by the table below, holding in the primer in for a second before releasing it each time (Figure 13).

Temperature	Suggested Number of Primes
-23°C (-10°F) and above	3
Below -23°C (-10°F)	6

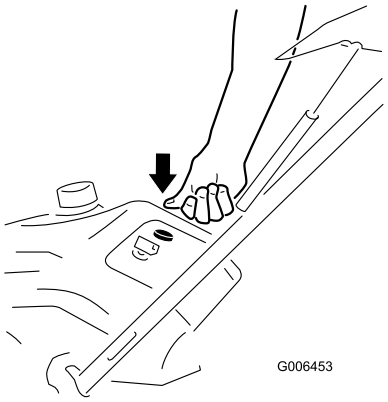

g006453

Figure 13

Note: Remove your glove when you push in the primer so that air cannot escape from the primer hole.

Important: **Do not use the primer or the choke if the engine has been running and is hot. Excessive priming may flood the engine and prevent it from starting.**

4. Pull the recoil-start handle (Figure 14).

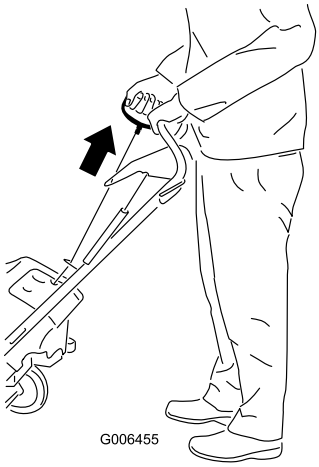

g006455

Figure 14

Note: If you pull the recoil handle and feel no resistance, the starter may be frozen. Thaw out the starter before attempting to start the machine.

5. While the engine is running, push in the choke lever slowly.

Engaging the Rotor Blades

To engage the rotor blades, hold the control bar against the handle (Figure 15).

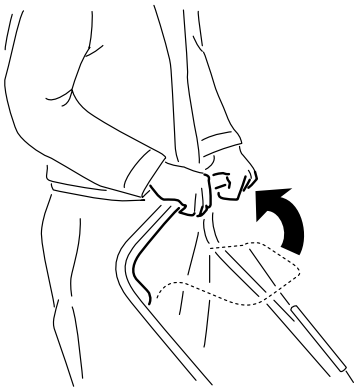

g216251

Figure 15

Disengaging the Rotor Blades

To disengage the rotor blades, release the control bar (Figure 16).



g006457

Figure 16

Shutting Off the Engine

To shut off the engine, turn the ignition key counterclockwise to the OFF position (Figure 17).

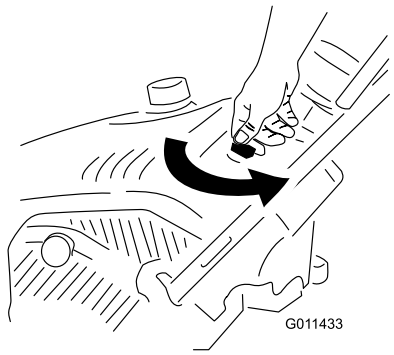

g011433

Figure 17

Adjusting the Discharge Chute and Chute Deflector

To adjust the discharge chute, move the chute handle and the chute-deflector handle as shown (Figure 18).

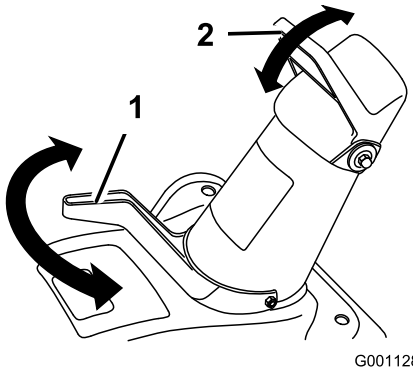

g001128

Figure 18

1. Chute handle
2. Chute-deflector handle

Clearing a Clogged Discharge Chute

To clear the chute:

- **Shut the engine off!**
- Wait 10 seconds to ensure that the rotor blades have stopped rotating.
- Always use a clean-out tool; never use your hands.

Operating Tips

⚠ WARNING

The rotor blades can throw stones, toys, and other foreign objects and cause serious personal injury to you or bystanders.

- **Keep the area to be cleared free of all objects that the rotor blades could pick up and throw.**
- **Keep all children and pets away from the area of operation.**
- Remove the snow as soon as possible after it falls.
- Overlap each swath to ensure complete snow removal.
- Discharge the snow downwind whenever possible.
- If the machine does not propel itself forward on slippery surfaces or in heavy snow, push forward on the handle, but allow the machine to work at its own pace.

After Operation

After Operation Safety

- Never store the machine with fuel in the fuel tank inside a building where ignition sources are present, such as hot water heaters, space heaters, or clothes dryers. Allow the engine to cool before storing in any enclosure.
- When storing the machine for more than 30 days, refer to Storage (page 17) for important details.

Preventing Freeze-up after Use

- Let the engine run for a few minutes to prevent moving parts from freezing. Shut off the engine, wait for all moving parts to stop, and remove ice and snow from the machine.
- Clean off any snow and ice from the base of the chute.
- Rotate the discharge chute left and right to free it from any ice buildup.
- With the ignition key in the OFF position, pull the recoil-start handle several times or connect the electrical cord to a power source and the machine and push the electric-start button once to prevent the recoil starter and/or the electric starter from freezing up (electric-start models only).
- In snowy and cold conditions, some controls and moving parts may freeze. Do not use excessive force when trying to operate frozen controls. If you have difficulty operating any control or part, start the engine and let it run for a few minutes.

Maintenance

Recommended Maintenance Schedule(s)

Maintenance Service Interval	Maintenance Procedure
After the first hour	• Check the control cable and adjust it if necessary. • Check for loose fasteners and tighten them if necessary.
After the first 2 hours	• Change the engine oil.
Before each use or daily	• Check the engine-oil level and add oil if necessary.
Every 25 hours	• Inspect the rotor blades and have an Authorized Service Dealer replace the rotor blades and scraper if necessary.
Every 50 hours	• Change the engine oil. • Service the spark plug and replace it if necessary. • Replace the drive belt.
Yearly	• Check the control cable and adjust it if necessary. • Inspect the rotor blades and have an Authorized Service Dealer replace the rotor blades and scraper if necessary. • Change the engine oil. • Service the spark plug and replace it if necessary. • Replace the drive belt. • Check for loose fasteners and tighten them if necessary. • Have an Authorized Service Dealer inspect the drive belt and replace it if necessary.
Yearly or before storage	• Prepare the machine for storage.

Maintenance Safety

Read the following safety precautions before performing any maintenance on the machine:

- Before performing any maintenance, service, or adjustment, shut off the engine and remove the key. If major repairs are ever needed, contact an Authorized Service Dealer.
- Check all fasteners at frequent intervals for proper tightness to ensure that the machine is in safe working condition.
- Do not change the governor settings on the engine.
- Purchase only genuine Toro replacement parts and accessories.

Adjusting the Control Cable

Checking the Control Cable

Service Interval: After the first hour—Check the control cable and adjust it if necessary.

Yearly—Check the control cable and adjust it if necessary.

Move the control bar back toward the handle to remove the slack in the control cable (Figure 19).

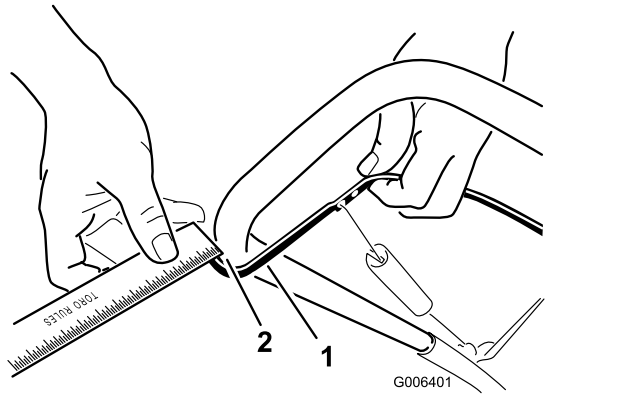

g006401

Figure 19

1. Control bar
2. 2 mm to 3 mm (1/16 inch to 1/8 inch) gap

Note: Ensure that a 2 to 3 mm (1/16 to 1/8 inch) gap exists between the control bar and the handle (Figure 19).

Important: **The control cable must contain some slack when you disengage the control bar for the rotor blades to stop properly.**

Adjusting the Control Cable

1. Slide up the spring cover and unhook the spring from the adjuster link (Figure 20).

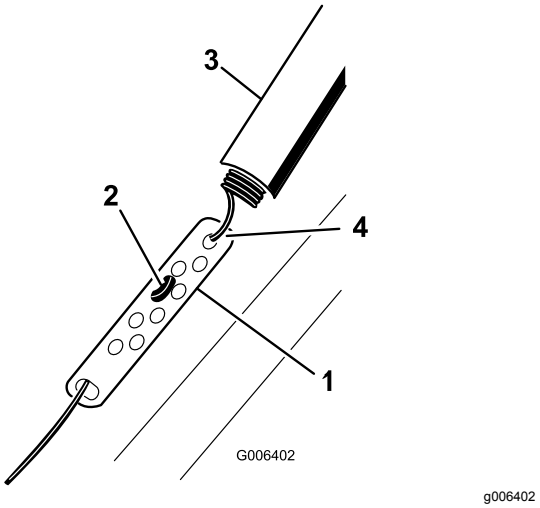

g006402

Figure 20

1. Adjuster link
2. Z-fitting
3. Spring cover
4. Unhook the spring here.

Note: You can pull up the adjuster link and cable to make unhooking the spring easier.

2. Move the Z-fitting to a higher or lower hole on the adjuster link as needed to obtain the 2 to 3 mm (1/16 to 1/8 inch) gap between the control bar and the handle (Figure 19).

   Note: Moving the Z-fitting higher decreases the gap between the control bar and the handle; moving it lower increases the gap.

3. Hook the spring to the adjuster link and slide the spring cover over the adjuster link.
4. Check the adjustment; refer to Checking the Control Cable (page 11).

   Note: After extended use, the drive belt may wear and lose its proper belt tension. If the drive belt slips (continuously squeals) under a heavy load, disconnect the spring from the adjustor link and move the upper end of the spring to the hole that is further from the pivot point in the control bar (Figure 21). Then connect the spring to the adjustor link and adjust the control cable.

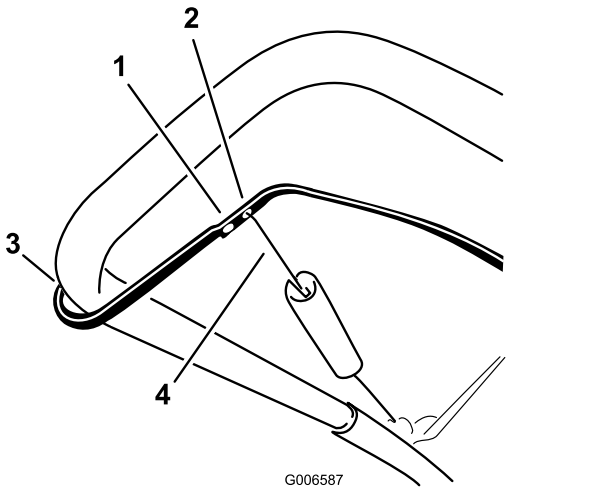

Figure 21

1. Remove the upper end of spring from this hole.
2. Insert the upper end of spring into this hole.
3. Pivot point
4. Upper end of spring

Note: The belt may slip (squeal) in wet conditions; to dry out the drive system, start the rotor and run it without a load for 30 seconds.

Inspecting the Rotor Blades

Service Interval: Every 25 hours—Inspect the rotor blades and have an Authorized Service Dealer replace the rotor blades and scraper if necessary.

Yearly—Inspect the rotor blades and have an Authorized Service Dealer replace the rotor blades and scraper if necessary.

Before each session, inspect the rotor blades for wear. When a rotor-blade edge has worn down to the wear-indicator hole, have an Authorized Service Dealer replace the rotor blades and the scraper (Figure 22).

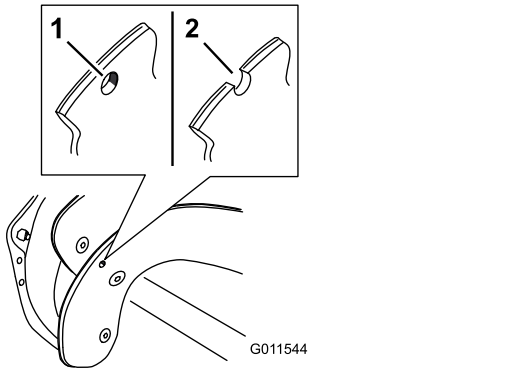

Figure 22

1. The wear-indicator hole is intact; you do not need to replace the rotor blades.
2. The wear-indicator hole is exposed; replace the rotor blades and scraper.

Changing the Engine Oil

Service Interval: After the first 2 hours

Every 50 hours

Yearly

If possible, run the engine for a few minutes before changing the oil to warm it. Warm oil flows better and carries more contaminants.

Engine Oil Specifications

Engine oil capacity	0.60 L (20 fl oz)
Oil viscosity	Refer to Figure 25.
API service classification	SJ or higher

1. Siphon the fuel from the fuel tank into an approved fuel container, or run the engine until it shuts off.
2. Move the machine to a level surface.
3. Place an oil-drain pan under the oil-drain plug, remove the plug, and tip the machine backward and drain the used oil in the pan (Figure 23).

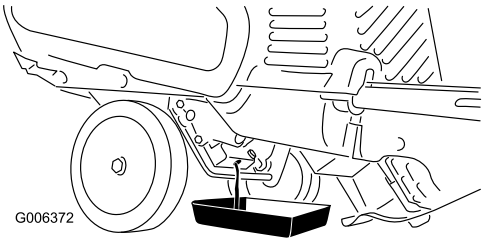

Figure 23

4. After draining the used oil, return the machine to the operating position.
5. Install the oil-drain plug and tighten it securely.
6. Clean around the oil-fill cap (Figure 24).

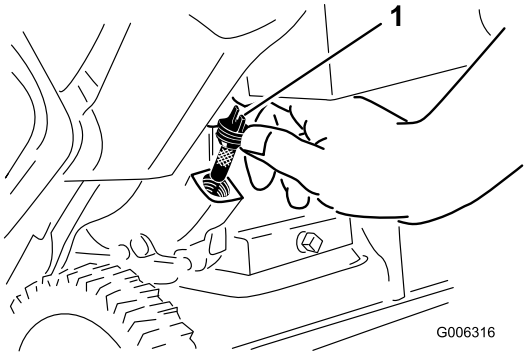

g006316

Figure 24

1. Oil-fill cap

7. Unscrew the oil-fill cap and remove it (Figure 24).
8. With the machine in the operating position, **carefully** pour oil into the oil-fill hole to the point of overflow (Figure 26).

   Note: You may tip the machine forward (handle up) to make adding oil easier. Remember to return the machine to the operating position before checking the oil level.

   Important: **Do not tip the machine all the way forward onto its nose, or fuel may leak out of the machine.**

   Use Figure 25 below to select the best oil viscosity for the outdoor temperature range expected.

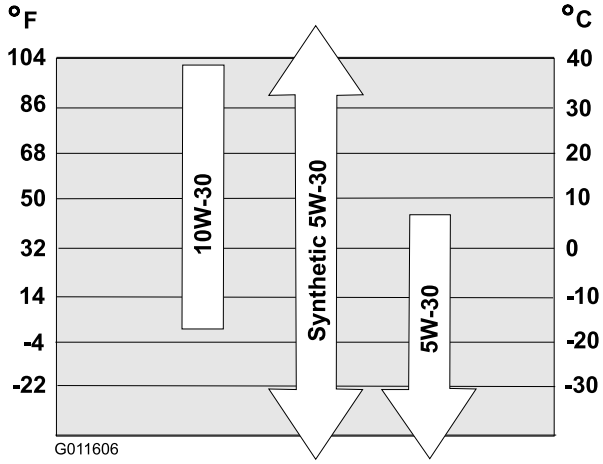

g011606

Figure 25

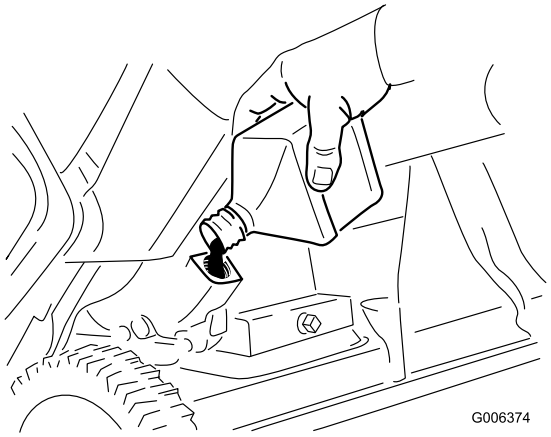

g006374

Figure 26

9. Wait 3 minutes for the oil to settle and add enough oil to bring it to the point of overflow.
10. Screw the oil-fill cap into the oil-fill hole, and tighten it securely by hand.
11. Wipe up any spilled oil.
12. Dispose of the used oil properly at a local recycling center.

Servicing the Spark Plug

Service Interval: Every 50 hours

Yearly—Service the spark plug and replace it if necessary.

Use a **NGK BPR6ES or Champion RN9YC** spark plug or equivalent.

1. Shut off the engine and wait for all moving parts to stop.
2. Rotate the discharge chute so that it faces forward.
3. Remove the discharge chute by removing the 3 screws holding the chute and the screws holding the chute seal (Figure 27).

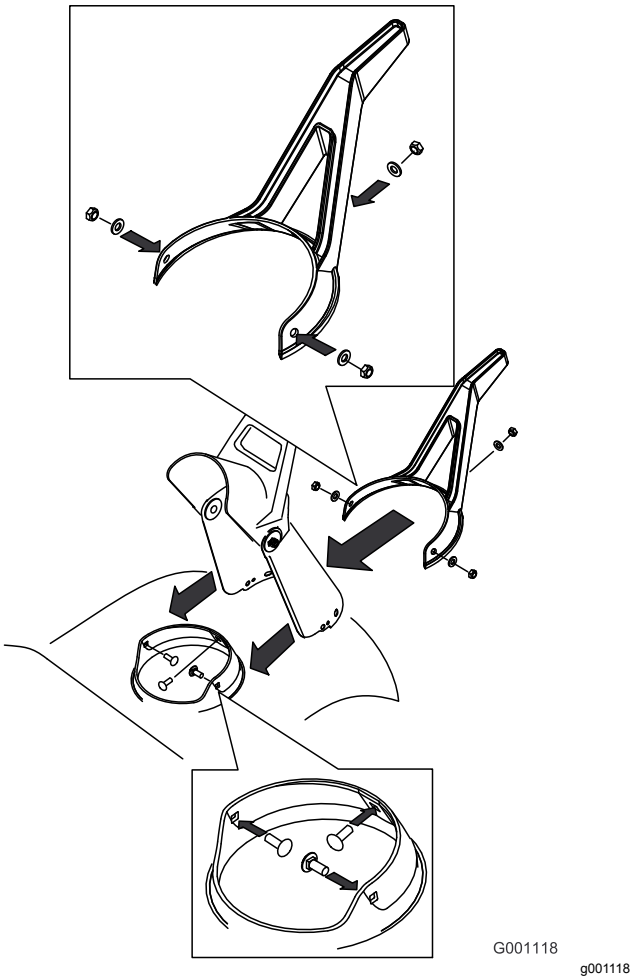

Figure 27

4. Remove the 4 screws that secure the shroud (Figure 28).

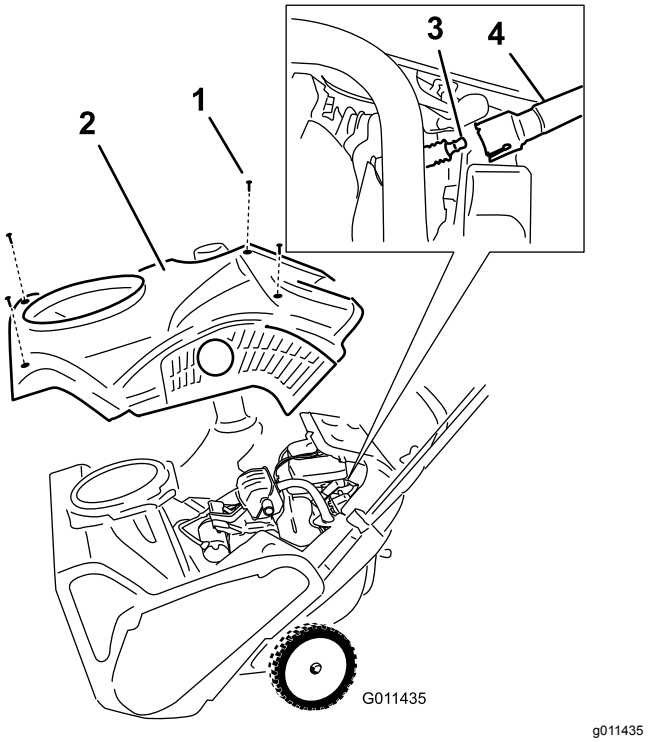

Figure 28

1. Screw (4)
2. Shroud
3. Spark plug
4. Spark-plug wire

5. Remove the fuel-tank cap.
6. Remove the shroud (Figure 28).
7. Install the fuel-tank cap.
8. Disconnect the wire from the spark plug.
9. Clean around the spark plug.
10. Remove the spark plug from the cylinder head.

   Important: **Replace a cracked, fouled, or dirty spark plug. Do not clean the electrodes because grit entering the cylinder can damage the engine.**

11. Set the gap on the plug to 0.030 inch (0.76 mm) as shown in Figure 29.

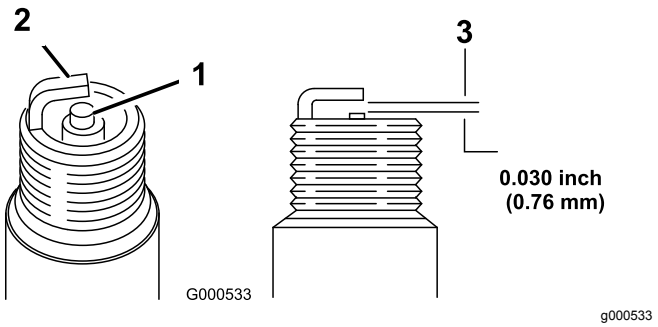

Figure 29

1. Center-electrode insulator
2. Side electrode
3. Air gap (not to scale)

12. Install the spark plug and torque it to 20 to 22 ft-lb (27 to 30 N-m).
13. Connect the wire to the spark plug.

    Note: Ensure that the breather tube is routed above the spark-plug wire as shown in Figure 30.

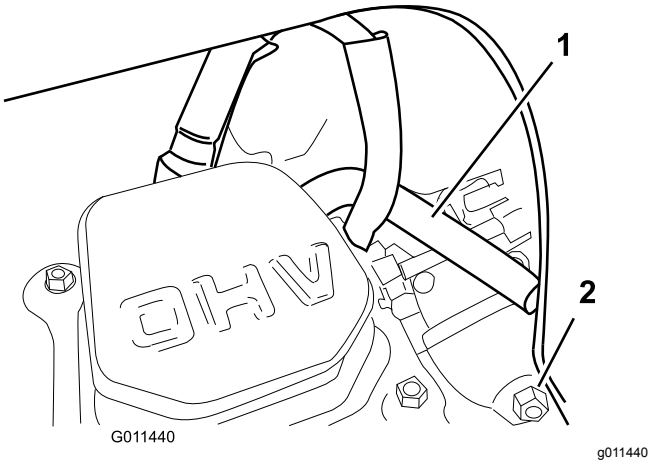

Figure 30

1. Breather tube
2. Carburetor drain bolt

14. Remove the fuel-tank cap.
15. Install the shroud with the screws that you removed in step 4.

    Note: Ensure that the upper and lower shrouds fit together in the side grooves.
16. Install the fuel-tank cap.
17. Install the chute seal, the discharge chute, and the discharge-chute handle onto the machine using the hardware that you removed in step 3.

    Note: The small screw goes through the small hole in the chute seal at the front of the discharge-chute opening.

Replacing the Drive Belt

Service Interval: Every 50 hours

Yearly

If the drive belt becomes worn, oil-soaked, excessively cracked, frayed, or otherwise damaged, replace the belt.

1. Remove the drive-belt cover by removing the 3 bolts as shown in Figure 31.

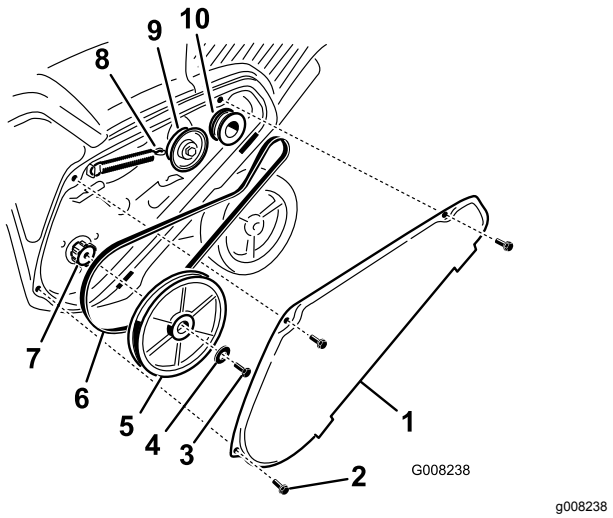

Figure 31

1. Drive-belt cover
2. Bolt (3)
3. Rotor-pulley bolt
4. Curved washer
5. Rotor pulley
6. Drive belt
7. Rotor shaft
8. Brake spring (unhook from idler arm here)
9. Idler pulley
10. Engine pulley

2. Unhook the brake spring from the idler arm to release the belt tension (Figure 31).
3. Remove the screw and curved washer that holds the rotor pulley (Figure 31).
4. Remove the rotor pulley and the drive belt (Figure 31).
5. Install the new drive belt, routing it as shown in Figure 32.

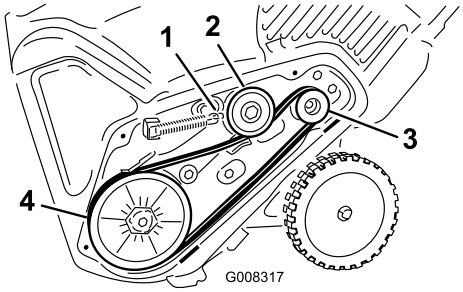

g008317

Figure 32

1. Brake spring (install on idler arm here)
2. Idler pulley
3. Engine pulley
4. Rotor pulley

Note: Route the new drive belt first around the engine pulley, then the idler pulley, and finally around the loose rotor pulley positioned just above the rotor shaft (Figure 31).

6. Install the rotor pulley onto the rotor shaft (Figure 31).
7. Install the curved washer and the rotor-pulley bolt and tighten them securely (Figure 31).

   Note: The concave side of the curved washer goes against the outside of the pulley.
8. Install the brake spring onto the idler arm (Figure 32).
9. Install the drive-belt cover with the bolts that you removed in step 1.

   Note: Ensure that the drive belt is properly adjusted and operating; refer to Checking the Control Cable (page 11) and Adjusting the Control Cable (page 11).

Storage

Preparing the Machine for Storage

⚠ WARNING

Fuel fumes are highly flammable, explosive, and dangerous if inhaled. If you store the product in an area with an open flame, the fuel fumes may ignite and cause an explosion.

- **Do not store the machine in a house (living area), basement, or any other area where ignition sources may be present, such as hot water and space heaters, clothes dryers, furnaces, and other appliances.**
- **Do not tip the machine either forward or backward with fuel in the fuel tank; otherwise, fuel may leak out of the machine.**
- **Do not store the machine with its handle tipped down onto the ground; otherwise, oil leaks into the engine cylinder and onto the ground, and the engine does not start or run.**

1. On the last refueling of the season, add fuel stabilizer to fresh fuel as directed by the fuel-stabilizer manufacturer.

   Important: **Do not store fuel longer than that suggested by the fuel-stabilizer manufacturer.**
2. Run the engine for 10 minutes to distribute the conditioned fuel through the fuel system.
3. Shut off the engine, allow it to cool, and siphon the fuel tank or run the engine until it shuts off.
4. Start the engine and run it until it shuts off.
5. Choke or prime the engine, start it a third time, and run the engine until it does not start.
6. Drain the fuel in the carburetor through the carburetor-drain bolt into an approved gasoline container.
7. Dispose of unused fuel properly. Recycle it according to local codes, or use it in your automobile.
8. While the engine is still warm, change the engine oil. Refer to Changing the Engine Oil (page 12).
9. Remove the spark plug.
10. Squirt 10 ml (2 tsp) of oil into the spark-plug hole.
11. Install the spark plug by hand and then torque it to 27 to 30 N·m (20 to 22 ft-lb).
12. With the ignition key in the OFF position, pull the recoil-start handle slowly to distribute the oil on the inside of the cylinder.
13. Clean the machine.
14. Touch up chipped surfaces with paint available from an Authorized Service Dealer. Sand affected areas before painting, and use a rust preventative to prevent the metal parts from rusting.
15. Tighten any loose fasteners. Repair or replace any damaged parts.
16. Cover the machine and store it in a clean, dry place out of the reach of children. Allow the engine to cool before storing the machine in any enclosure.

Notes:

Notes:



Count on it.