Form No. 3415-663 Rev A

Power Max® Heavy Duty 928 OHXE Snowthrower
Power Max® Heavy Duty 1028 OHXE Snowthrower

Model No. 38801—Serial No. 402082000 and Up

Model No. 38802—Serial No. 402082000 and Up

Operator's Manual

Introduction

This machine is intended to be used by residential homeowners. It is designed primarily for removing snow from paved surfaces, such as driveways and sidewalks, and other surfaces for traffic on residential or commercial properties. It is not designed for removing materials other than snow.

Read this information carefully to learn how to operate and maintain your product properly and to avoid injury and product damage. You are responsible for operating the product properly and safely.

You may contact Toro directly at www.Toro.com for product safety and operation training materials, accessory information, help finding a dealer, or to register your product.

Whenever you need service, genuine Toro parts, or additional information, contact an Authorized Service Dealer or Toro Customer Service and have the model and serial numbers of your machine ready. Figure 1 identifies the location of the model and serial numbers on the machine. Write the numbers in the space provided.

Important: **With your smartphone or tablet, scan the QR code on the serial number decal to access warranty, parts, and other product information.**

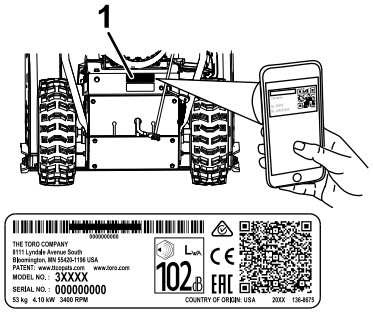

g219961

Figure 1

1. Model and serial number location

Model No. _____

Serial No. _____

This manual identifies potential hazards and has safety messages identified by the safety-alert symbol (Figure 2), which signals a hazard that may cause serious injury or death if you do not follow the recommended precautions.



g000502

Figure 2

Safety-alert symbol

This manual uses 2 words to highlight information. **Important** calls attention to special mechanical information and **Note** emphasizes general information worthy of special attention.

⚠ WARNING

CALIFORNIA
Proposition 65 Warning

This product contains a chemical or chemicals known to the State of California to cause cancer, birth defects, or reproductive harm.

The engine exhaust from this product contains chemicals known to the State of California to cause cancer, birth defects, or other reproductive harm.

Important: **If you are using this machine above 1500 m (5,000 ft) for a continuous period, ensure that the High Altitude Kit has been installed so that the engine meets CARB/EPA emission regulations. The High Altitude Kit increases engine performance while preventing spark-plug fouling, hard starting, and increased emissions. Once you have installed the kit, attach the high-altitude label next to the serial decal on the machine. Contact any Authorized Toro Service**

© 2017—The Toro® Company
8111 Lyndale Avenue South
Bloomington, MN 55420

Register at www.Toro.com.

Original Instructions (EN)
Printed in the USA
All Rights Reserved

3415-663 A

Dealer to obtain the proper High Altitude Kit and high-altitude label for your machine. To locate a dealer convenient to you, access our website at www.Toro.com or contact our Toro Customer Care Department at the number(s) listed in your Emission Control Warranty Statement. Remove the kit from the engine and restore the engine to its original factory configuration when running the engine under 1500 m (5,000 ft). Do not operate an engine that has been converted for high-altitude use at lower altitudes; otherwise, you could overheat and damage the engine.

If you are unsure whether or not your machine has been converted for high-altitude use, look for the following label (Figure 3).

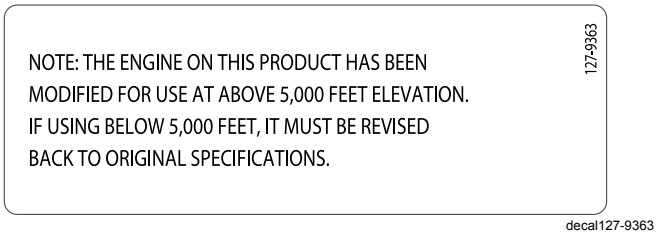

Figure 3

Contents

Introduction 1
Safety 3
General Safety 3
Safety and Instructional Decals 3
Setup 5
Installing the Upper Handle 5
Installing the Wheel-Clutch-Cable Ends 5
Installing the Traction-Control Linkage 6
Installing the Chute-Control Rod 7
Connecting the Headlight and Handwarmer Wires to the Engine 7
Installing the Snow-Cleanout Tool 8
Checking the Engine-Oil Level 8
Checking and Adjusting the Tire Pressure 8
Checking the Skids and Scraper 8
Checking the Operation of the Traction Drive 8
Product Overview 9
Operation 10
Before Operation 10
Before Operation Safety 10
Filling the Fuel Tank 10
During Operation 11
During Operation Safety 11
Starting the Engine 11
Shutting Off the Engine 13
Operating the Handwarmers 13
Operating the Traction Drive 14
Using the Wheel-Clutch Levers 14
Operating the Speed Selector 14
Operating the Auger/Impeller Drive 15
Operating the Quick Stick® 15
Clearing a Clogged Discharge Chute 16
Operating Tips 16
After Operation 17
After Operation Safety 17
Preventing Freeze-up after Use 17
Maintenance 18
Recommended Maintenance Schedule(s) 18
Maintenance Safety 18
Preparing for Maintenance 18
Checking the Engine-Oil Level 19
Checking and Adjusting the Skids and Scraper 19
Checking and Adjusting the Traction Cable 20
Checking and Adjusting the Auger/Impeller Cable 20
Checking the Auger-Gearbox-Oil Level 21
Changing the Engine Oil 21
Lubricating the Hex Shaft 22
Replacing the Spark Plug 23
Adjusting the Discharge-Chute Latch 23
Replacing the Drive Belts 24
Replacing the Headlight Bulb 24
Storage 25
Storing the Machine 25
Removing the Machine from Storage 25
Troubleshooting 26

Safety

General Safety

This machine complies with ANSI B71.3 specifications.

- Read and understand the contents of this *Operator's Manual* before you start the engine. Ensure that everyone using this product knows how to use the product and understands the warnings.
- Do not put your hands or feet near moving components on the machine.
- Do not operate the machine without all guards and other safety protective devices in place and working on the machine.
- Keep clear of any discharge opening. Keep bystanders a safe distance away from the machine.
- Keep children out of the operating area. Never allow children to operate the machine.
- Shut off the engine before unclogging, servicing, or fueling the machine.

You can find additional safety information where needed throughout this manual.

Safety and Instructional Decals

Safety decals and instructions are easily visible to the operator and are located near any area of potential danger. Replace any decal that is damaged or missing.

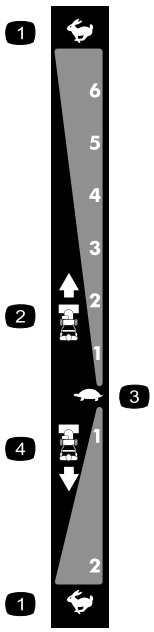

decal106-4525

106-4525

Order Part No. 112-6633

1. Fast
2. Forward speeds
3. Slow
4. Reverse speeds



decal107-3040

107-3040

1. Cutting/dismemberment hazards of hand or foot, impeller and auger—keep bystanders a safe distance away from the machine.

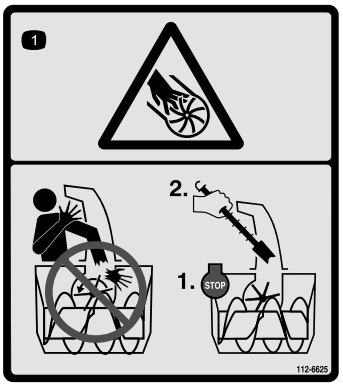

decal112-6625

112-6625

Order Part No. 112-6629

1. Cutting/dismemberment hazard, impeller—do not place your hand in the chute; shut off the engine before leaving the operator's position and use a tool to clear the chute.

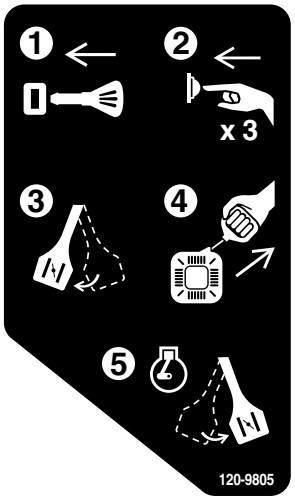

decal120-9805

120-9805

1. Insert the key.
2. Prime the engine 3 times.
3. Engage the choke.
4. Pull the starter cord.
5. Once the engine is running, disengage the choke.

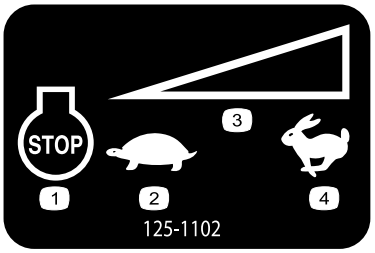

decal125-1102

125-1102

1. Engine—shut off
2. Slow
3. Variable speed control
4. Fast

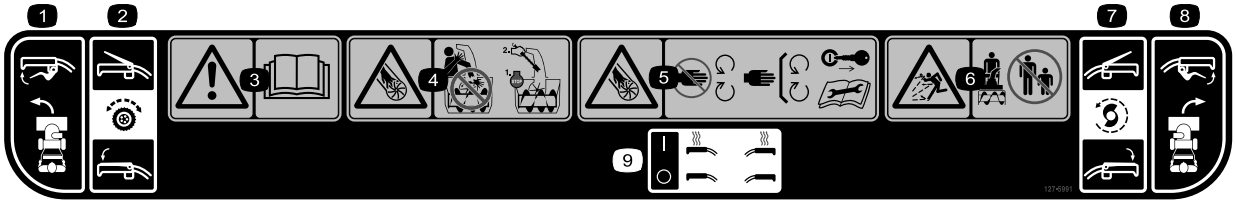

decal127-5991

127-5991

1. Left turn control
2. Traction drive—squeeze the lever to engage; release the lever to disengage.
3. Warning—read the *Operator's Manual.*
4. Cutting/dismemberment hazard, impeller—do not place your hand in the chute; shut off the engine before leaving the operator's position and use a tool to clear the chute.
5. Cutting/dismemberment hazard, impeller—stay away from moving parts; keep all guards and shields in place; remove the ignition key and read the instructions before servicing or performing maintenance.
6. Thrown object hazard—keep bystanders a safe distance away from the machine.
7. Auger/impeller drive—squeeze the lever to engage; release the lever to disengage.
8. Right turn control
9. Handwarmer controls

Setup

Installing the Upper Handle

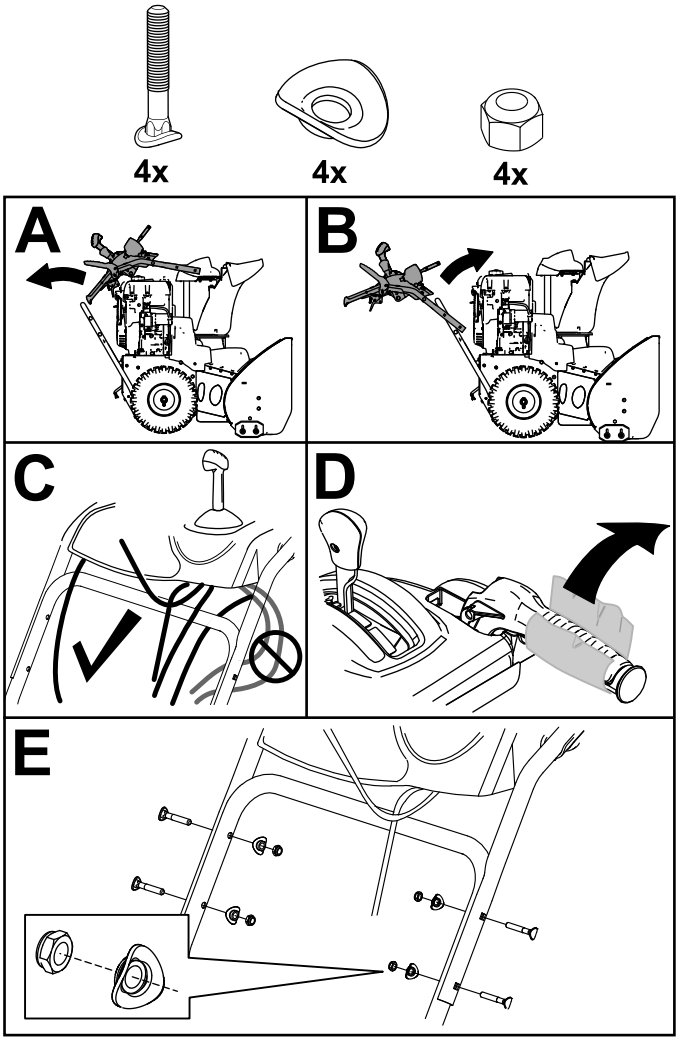

Note: Do not remove the rubber band on the cables until you have installed the upper handle.

Installing the Wheel-Clutch-Cable Ends

1. Unwrap and discard the bubble wrap from the cables on the lower handle (Figure 5).

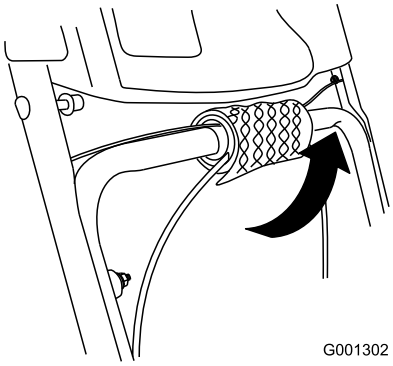

Figure 5

2. Route either the left or right cable end over the lower handle and insert the cable end into the hole in the corresponding wheel-clutch lever (Figure 6).

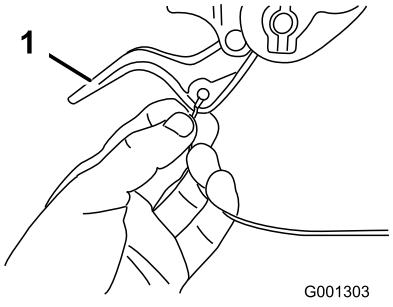

Figure 6

1. Wheel-clutch lever

3. Remove the nut and washer from the handle, attach the cable clamp on the cable to the handle, install the washer and the nut, and tighten the nut by hand (Figure 7).

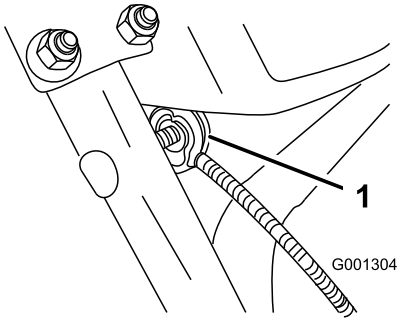

Figure 7

1. Cable clamp (2)

Important: **Ensure that the curved side of the cable clamp is against the handle and that the cable is routed below the clamp bolt. The cable must be in a straight line from the cable clamp to the point where it attaches to the wheel-clutch lever.**

4. Pull the cable jacket down gently until the wheel-clutch lever is down and the slack is out of the cable, then tighten the cable-clamp nut securely (Figure 8).

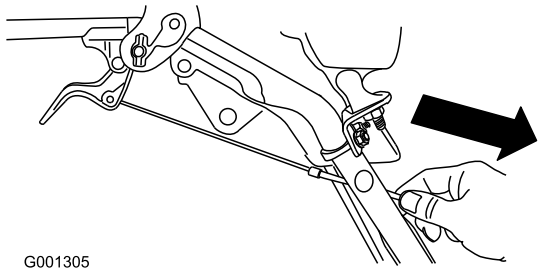

Figure 8

5. Squeeze the lever fully, then check the gap between the bottom of the handle and the end of the wheel-clutch lever (Figure 9).

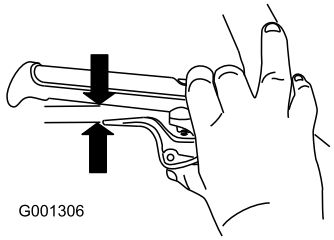

Figure 9

Note: The gap should be approximately the thickness of a pencil (1/4 inch or 6 mm). If it is greater, loosen the cable-clamp nut, slide the cable jacket up slightly, tighten the cable-clamp nut, and check the gap again.

6. Repeat steps 2 through 5 for the other cable.

Installing the Traction-Control Linkage

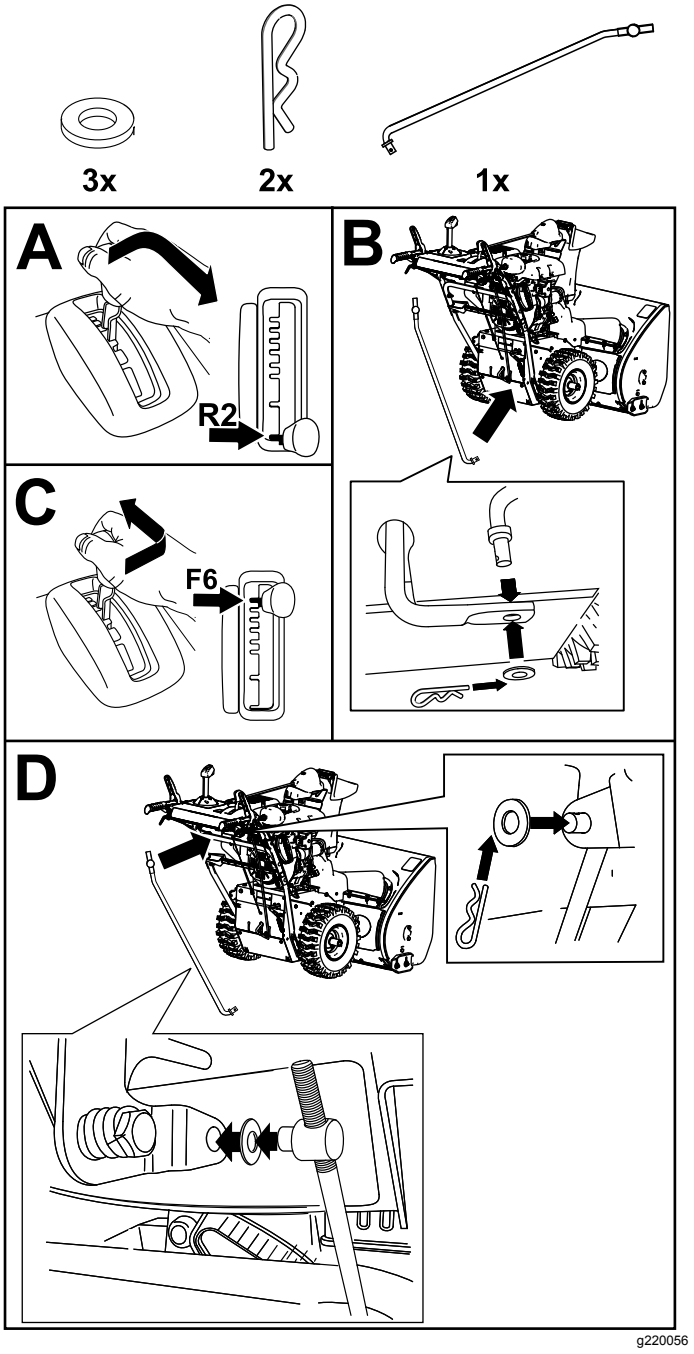

Installing the Chute-Control Rod

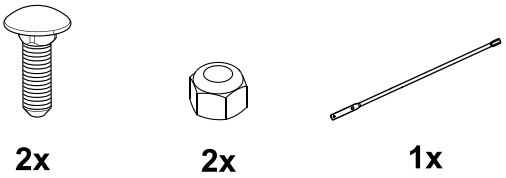

2x 2x 1x

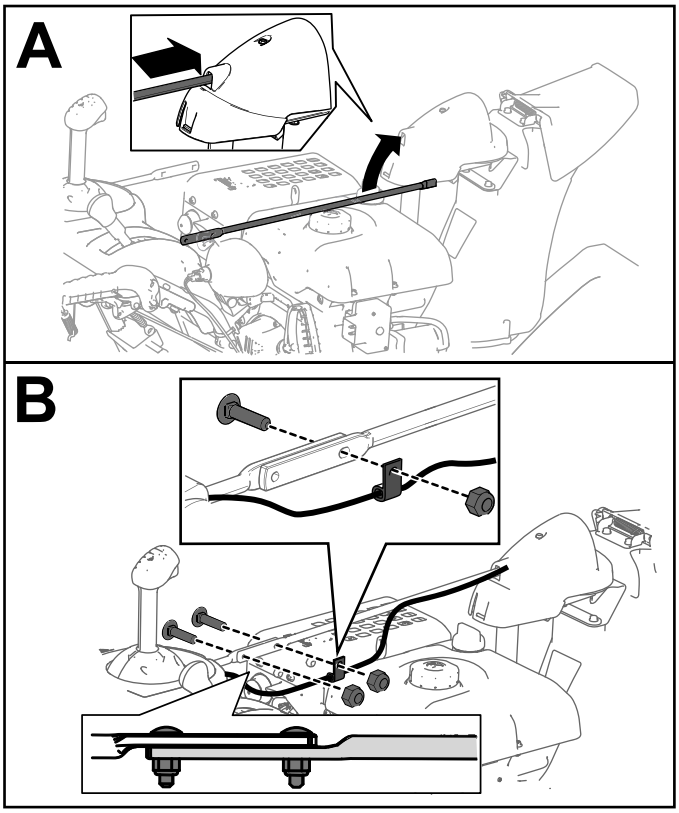

g220057

Connecting the Headlight and Handwarmer Wires to the Engine

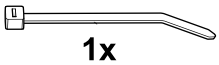

1x

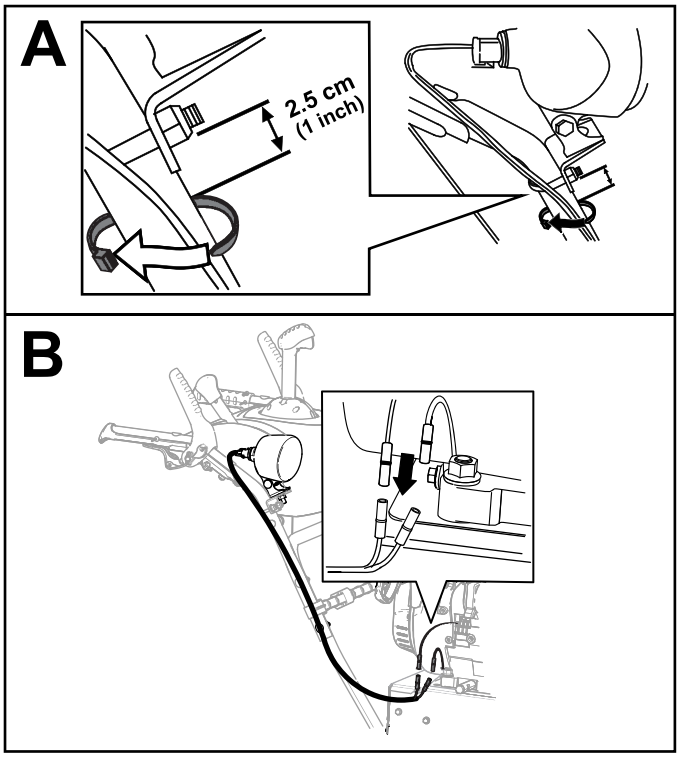

g220058

Installing the Snow-Cleanout Tool

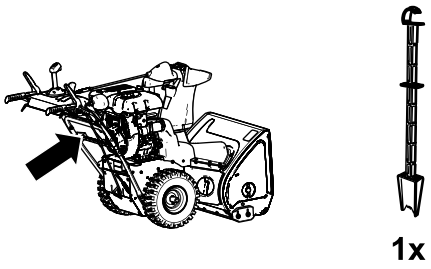

g220085

Checking the Engine-Oil Level

Note: Your machine comes with oil in the engine crankcase. Before starting the engine, check the oil level and add oil if necessary.

Refer to Checking the Engine-Oil Level (page 19).

Checking and Adjusting the Tire Pressure

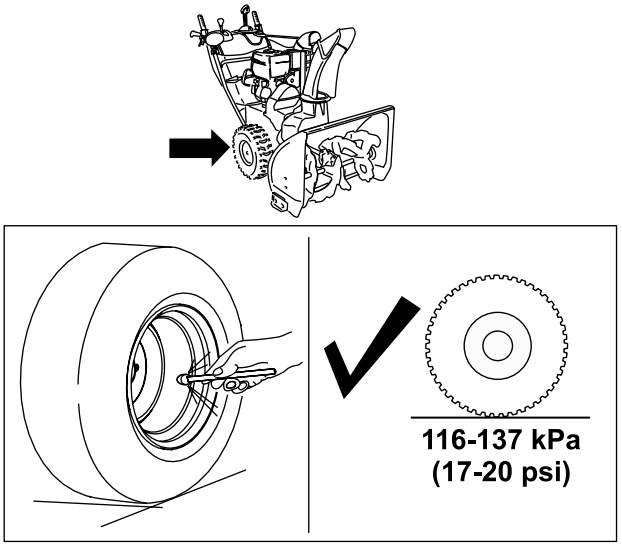

g219877

Checking the Skids and Scraper

Refer to Checking and Adjusting the Skids and Scraper (page 19).

Checking the Operation of the Traction Drive

⚠ CAUTION

If the traction drive is not properly adjusted, the machine may move in the direction opposite of what you intended, causing injury and/or property damage.

Carefully check the traction drive and adjust it properly, if necessary.

1. Start the engine; refer to Starting the Engine (page 11).
2. Move the speed selector to Position R1; refer to Operating the Speed Selector (page 14).
3. Squeeze the left (traction) lever to the handgrip (Figure 15).

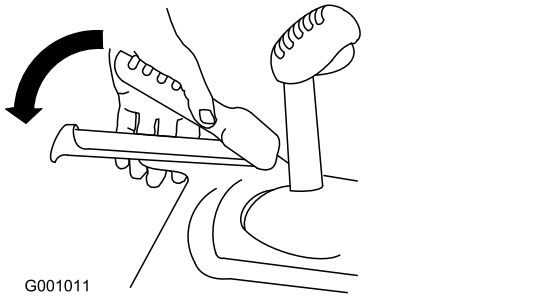

Figure 15

The machine should move rearward. If the machine does not move or moves forward, complete the following:

A. Release the traction lever and shut off the engine.

B. Disconnect the trunnion from the speed-selector lever.

C. Turn the trunnion downward (clockwise) on the speed-control rod.

D. Connect the trunnion to the speed-selector lever.

4. Release the traction lever.
5. Move the speed selector to Position 1; refer to Operating the Speed Selector (page 14).
6. Squeeze the left (traction) lever to the handgrip (Figure 15).

   The machine should move forward. If the machine does not move or moves rearward, complete the following:

   A. Release the traction lever and shut off the engine.

   B. Disconnect the trunnion from the speed-selector lever.

   C. Turn the trunnion upward (counterclockwise) on the speed-control rod.

   D. Connect the trunnion to the speed-selector lever.

7. If you made any adjustments, repeat this procedure until no adjustments are required.

Important: **If the machine moves when the traction lever is in the released position, check the traction cable; refer to Checking and Adjusting the Traction Cable (page 20) or take the machine to an Authorized Service Dealer for service.**

Product Overview

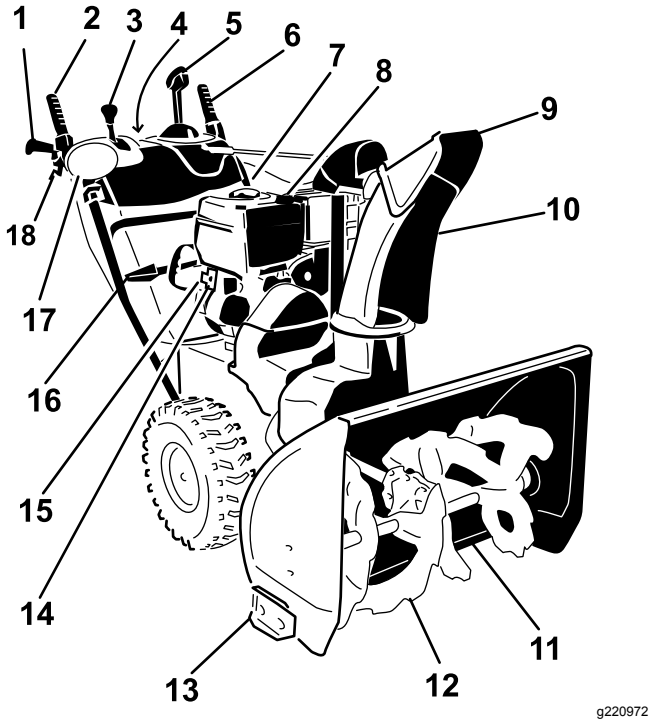

Figure 16

1. Handgrip (2)
2. Auger/impeller lever
3. Speed-selector lever
4. Handwarmer switch
5. Quick Stick® discharge-chute control
6. Traction lever
7. Fuel-tank cap
8. Oil-fill tube/dipstick
9. Chute deflector
10. Discharge chute
11. Scraper
12. Auger
13. Skid (2)
14. Electric-start button
15. Electric-start plug-in
16. Snow-cleanout tool
17. Headlight
18. Wheel-clutch lever (2)

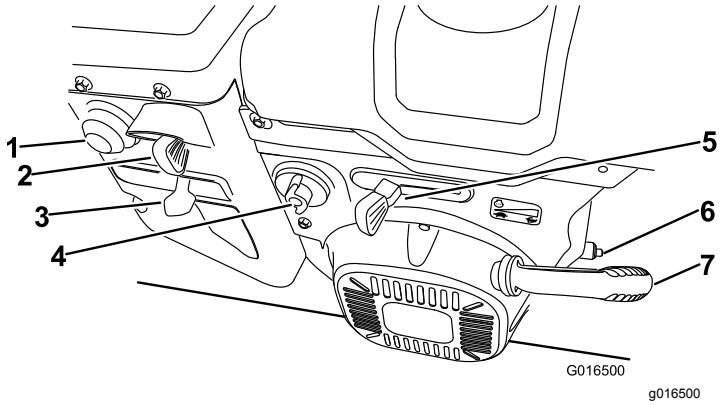

Figure 17

1. Primer
2. Ignition switch
3. Choke
4. Fuel-shutoff valve
5. Throttle
6. Oil-drain plug
7. Recoil-start handle

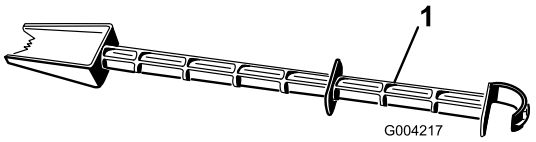

g004217

Figure 18

1. Snow-cleanout tool (attached to the handle)

Operation

Note: Determine the left and right sides of the machine from the normal operating position.

Before Operation

Before Operation Safety

- **For electric-start models only:** Use extension cords and receptacles as specified in the manual. Thoroughly inspect the electrical cord before plugging it into a power source. If the cord is damaged, do not use it. Replace the damaged cord. Unplug the power cord whenever you are not starting the machine.
- Wear adequate winter garments whenever you operate the machine. Wear substantial, slip-resistant footwear that improves footing on slippery surfaces. Avoid loose-fitting clothing that can get caught in moving parts.
- Always wear eye protection during operation or while performing an adjustment or repair to protect your eyes from foreign objects that the machine may throw.
- Thoroughly inspect the area where you will use the machine, and remove all doormats, sleds, boards, wires, and other foreign objects.
- If a shield, safety device, or decal is damaged, illegible, or missing, repair or replace it before beginning operation. Also tighten any loose fasteners.

⚠ DANGER

Fuel is extremely flammable and explosive. A fire or explosion from fuel can burn you and others.

- **To prevent a static charge from igniting the fuel, place the container and/or machine on the ground before filling, not in a vehicle or on an object.**
- **Fill the tank outdoors when the engine is cold. Wipe up spills.**
- **Do not handle fuel when smoking or around an open flame or sparks.**
- **Store fuel in an approved fuel container, out of the reach of children.**
- **Do not tip the machine either forward or backward with fuel in the fuel tank; otherwise, fuel may leak out of the machine.**

Filling the Fuel Tank

- For best results, use only clean, fresh (less than 30 days old), unleaded gasoline with an octane rating of 87 or higher ((R+M)/2 rating method).
- Oxygenated fuel with up to 10% ethanol or 15% MTBE by volume is acceptable.
- **Do not** use ethanol blends of gasoline (such as E15 or E85) with more than 10% ethanol by volume. Performance problems and/or engine damage may result which may not be covered under warranty.
- **Do not** use gasoline containing methanol.
- **Do not** store fuel either in the fuel tank or fuel containers over the winter unless you use a fuel stabilizer.
- **Do not** add oil to gasoline.

Do not fill above the bottom of the fuel tank neck (Figure 19).

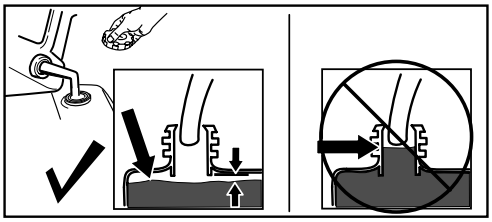

g216203

Figure 19

Note: For best results, purchase only the quantity of fuel that you expect to use in 30 days. Otherwise, you may add fuel stabilizer to newly purchased fuel to keep it fresh for up to 6 months.

During Operation

During Operation Safety

- **Shut off the engine before unclogging the machine and always use a stick or the snow-cleanout tool (if provided).**
- **A rotating auger can injure hands or feet.** Stay behind the handles and away from the discharge opening while operating the machine. **Keep your face, hands, feet, and any other part of your body or clothing away from moving or rotating parts.**
- Never direct the discharge toward people or areas where property damage can occur.
- Exercise caution to avoid slipping or falling. Always be sure of your footing, and keep a firm hold on the handles. Walk; never run.
- Exercise extreme caution when operating on slopes.
- Never operate the machine without good visibility or light.
- Do not operate the machine while ill, tired, or under the influence of alcohol or drugs.
- Look behind and use care when backing up with the machine.
- When not actively clearing snow, disengage power to the auger.
- Exercise extreme caution when operating on or crossing gravel drives, walks, or roads. Stay alert for hidden hazards or traffic.
- Never attempt to make any adjustments while the engine is running.
- After striking a foreign object, shut off the engine, remove the ignition key (electric-start models only), thoroughly inspect the machine for any damage, and repair the damage before starting and operating the machine.
- If the machine should start to vibrate abnormally, shut off the engine and check for the cause.
- Do not run the engine indoors unless there is adequate ventilation (e.g., leaving an outside door open); exhaust fumes are dangerous.
- Do not overload the machine capacity by attempting to clear snow at too fast a rate.
- Never touch a hot engine or muffler.

Starting the Engine

1. Check the engine-oil level. Refer to Checking the Engine-Oil Level (page 19).
2. Turn the fuel-shutoff valve 1/4 turn counterclockwise to open it (Figure 20).

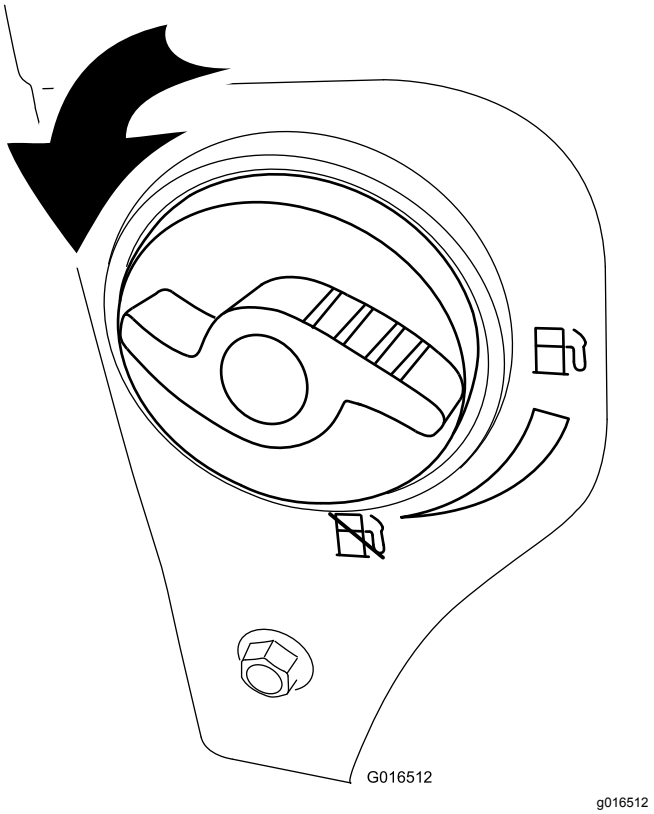

Figure 20

3. Fully insert the ignition key (Figure 21).

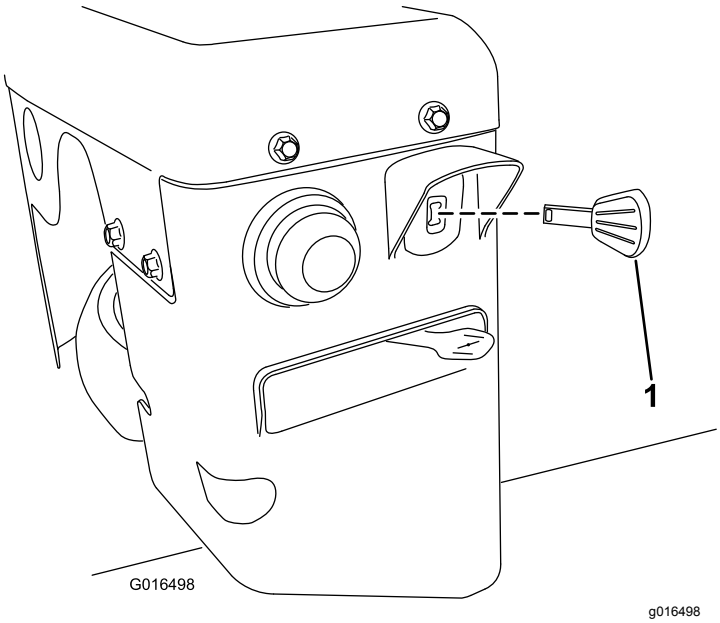

Figure 21

1. Ignition key

4. Firmly push in the primer with your thumb as indicated by the following table, holding the primer in for a second before releasing it each time (Figure 22).

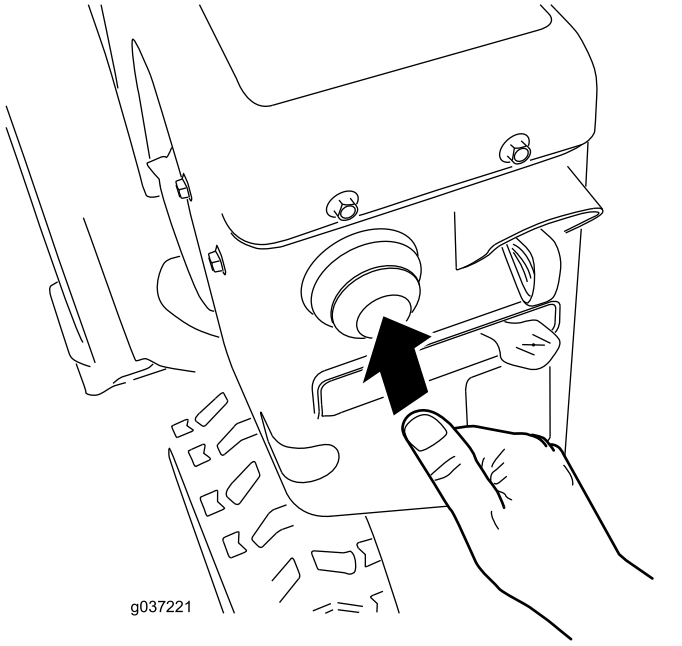

g037221

Figure 22

Temperature	Suggested Number of Primes
Above -18°C (0°F)	3
-23°C to -18°C (-10°F to 0°F)	4
Below -23°C (-10°F)	6

5. Move the choke to the CHOKE position (Figure 23).

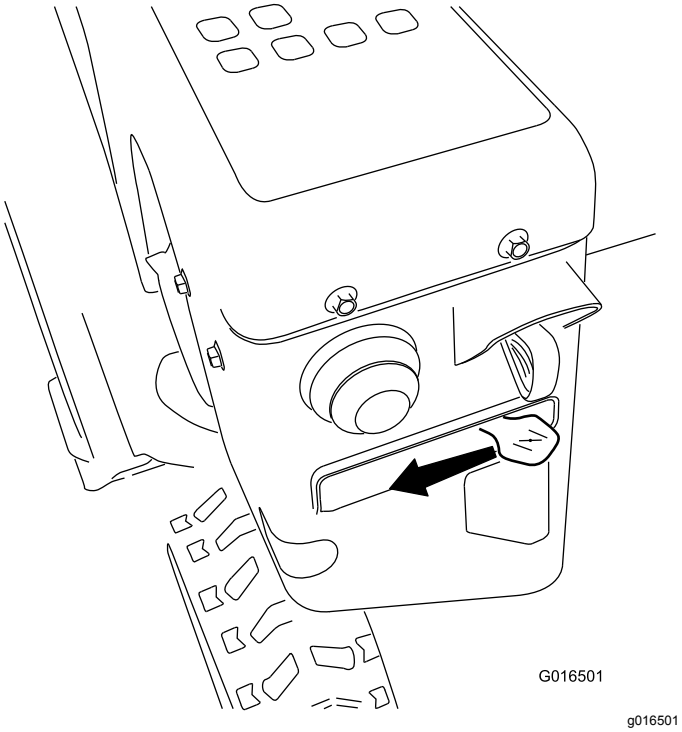

g016501

Figure 23

6. Move the throttle to the FAST position (Figure 24).

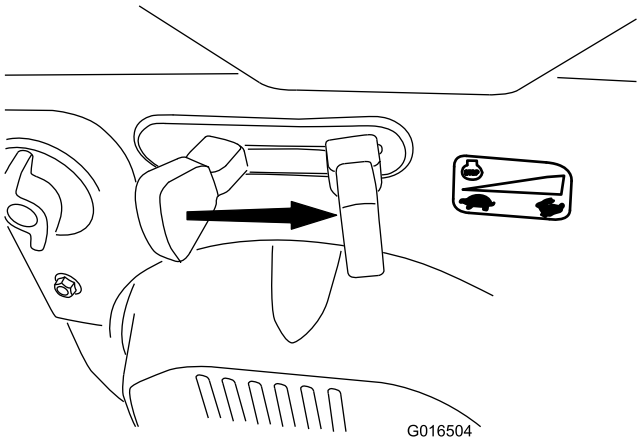

g016504

Figure 24

7. Start the machine by pulling the recoil starter or pressing the electric-starter button (Figure 25).

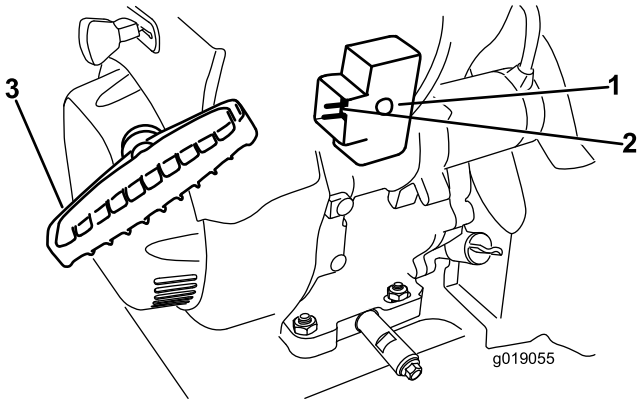

g019055

Figure 25

1. Electric-starter button
2. Electric starter plug-in
3. Recoil-start handle

Note: Use only an extension cord that is UL-listed, 16 gauge, not longer than 15 m (50 ft), and is designed for outdoor use.

⚠ WARNING

The electrical cord can become damaged, causing a shock or fire.

Thoroughly inspect the electrical cord before using the machine. If the cord is damaged, do not use it. Replace or repair the damaged cord immediately. Contact an Authorized Service Dealer for assistance.

Important: **To prevent damaging the electric starter, run it in short cycles (5 seconds on, 5 seconds off), no more than 10 times. If the**

engine still does not start, take the machine to an Authorized Service Dealer for service.

8. Disconnect the power cord from the power outlet first and then from the machine (electric-start models only).
9. Allow the engine to warm up; gradually move the choke toward the RUN position. Wait for the engine to run smoothly before each choke adjustment.

⚠ CAUTION

If you leave the machine plugged into a power outlet, someone can inadvertently start the machine and injure people or damage property.

Unplug the power cord whenever you are not starting the machine.

Shutting Off the Engine

1. Move the throttle to the SLOW position, and then to the STOP position (Figure 26). You can also shut off the engine by pulling the ignition key outward to the middle position.

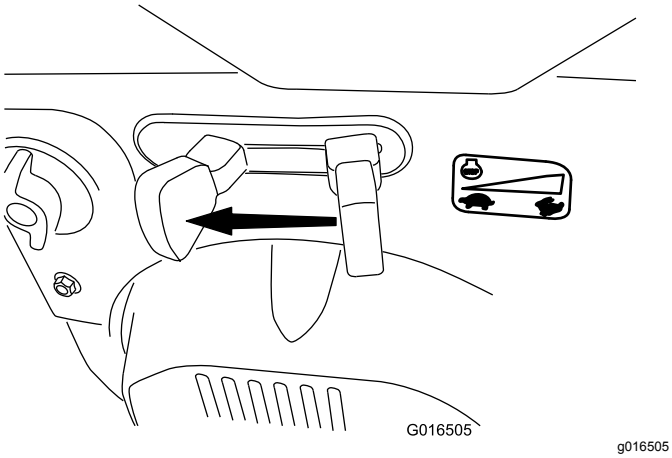

g016505

Figure 26

2. Wait for all moving parts to stop before leaving the operating position.
3. Remove the ignition key to prevent accidental starting.
4. Close the fuel shutoff valve by rotating it clockwise (Figure 27).

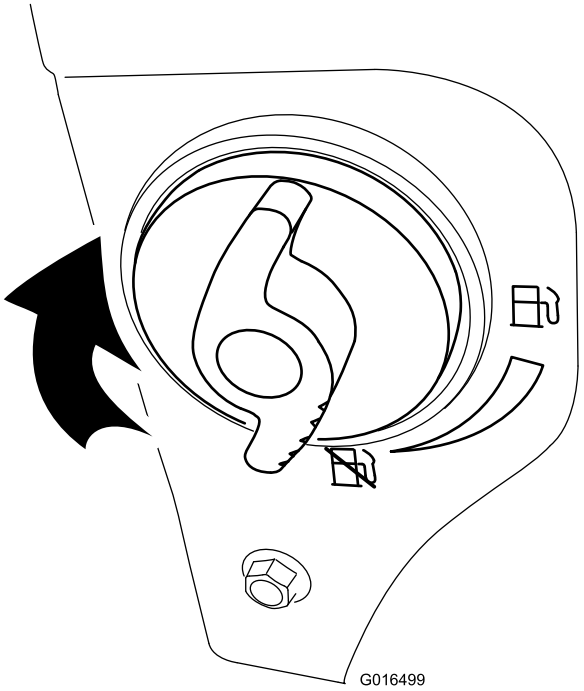

g016499

Figure 27

5. Pull the recoil starter 3 or 4 times.

   Note: This helps prevent the recoil starter from freezing up.

Operating the Handwarmers

Operate the handwarmers as follows:

- Press the switch to the ON position to turn on the handwarmers.
- Press the switch to the OFF position to turn off the handwarmers.

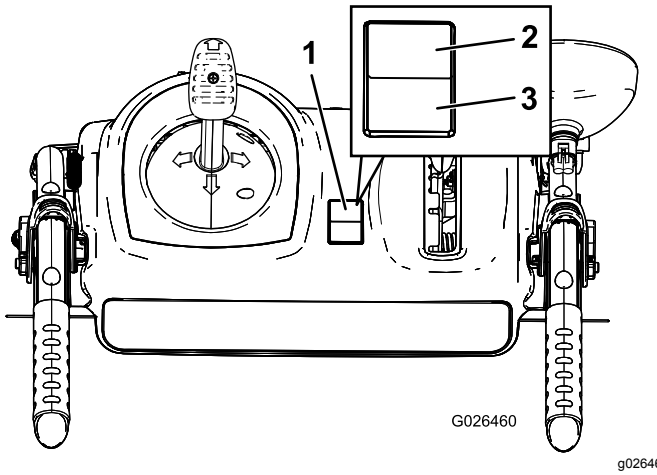

g026460

Figure 28

1. On/Off switch
2. ON position
3. OFF position

Operating the Traction Drive

⚠ CAUTION

If the traction drive is not properly adjusted, the machine may move in the direction opposite of what you intended, causing injury and/or property damage.

Carefully check the traction drive and adjust it properly, if necessary.

Important: **If the machine moves when the traction lever is in the released position, check the traction cable; refer to Checking and Adjusting the Traction Cable (page 20) or take the machine to an Authorized Service Dealer for service.**

Important: **To operate the traction drive, you must operate the machine with the self-propel feature engaged.**

1. To engage the traction drive, squeeze the left (traction) lever to the handgrip (Figure 29).

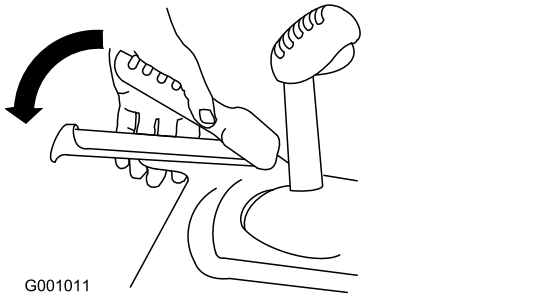

Figure 29

2. To stop the traction drive, release the traction lever.

Using the Wheel-Clutch Levers

The wheel-clutch levers allow you to momentarily disengage the drive to 1 or both wheels with the traction-drive lever still engaged. This enables you to turn and maneuver the machine easily.

Note: Holding down the traction lever against the handle engages the traction drive to both wheels.

To turn the machine to the right, lift up the right wheel-clutch lever and squeeze it toward the handle (Figure 30).

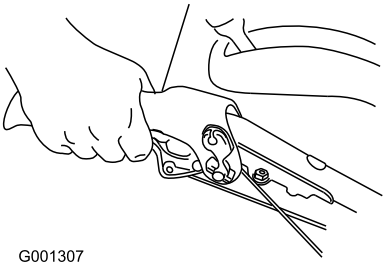

Figure 30

Note: This disengages the drive to the right wheel while the left wheel continues driving, and the machine turns to the right.

Note: Similarly, squeezing the left wheel-clutch lever turns the machine to the left.

When you complete the turn, release the wheel-clutch lever, and the drive re-engages both wheels (Figure 31).

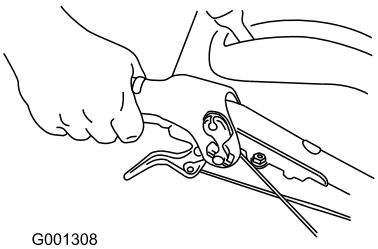

Figure 31

Momentarily squeezing and releasing the left or right wheel-clutch lever also allows for steering adjustments to keep the machine going in a straight line, especially in deep snow.

Squeezing both wheel-clutch levers simultaneously disengages the drive to both wheels. This enables you to manually move the machine backward without stopping to shift it into a reverse gear. It also allows you to maneuver and transport the machine more easily when the engine is not running.

Operating the Speed Selector

The speed selector has 6 forward and 2 reverse gears. To change speeds, release the traction lever and shift the speed-selector lever to the desired position (Figure 32). The lever locks in a notch at each speed selection.

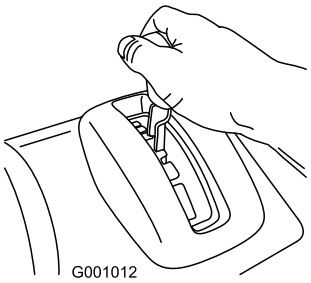

g001012

Figure 32

Operating the Auger/Impeller Drive

1. To engage the auger/impeller drive, squeeze the right (auger/impeller) lever to the handgrip (Figure 33).

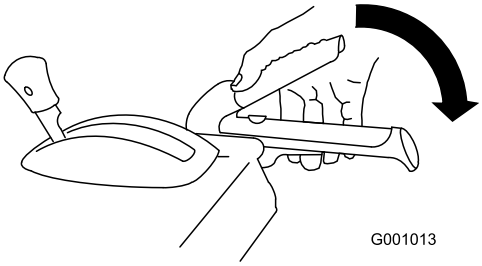

g001013

Figure 33

2. To stop the auger and impeller, release the right lever.

   Important: **When you engage both the auger/impeller lever and the traction lever, the traction lever locks the auger/impeller lever down, freeing your right hand. To release both levers, simply release the left (traction) lever.**

3. If the auger and impeller continue to rotate when you release the auger/impeller lever, do not operate the machine. Check the auger/impeller cable; refer to Checking and Adjusting the Auger/Impeller Cable (page 20) and adjust it if necessary. Otherwise, take the machine to an Authorized Dealer for service.

⚠ WARNING

If the auger and impeller continue to rotate when you release the auger/impeller lever, you could seriously injure yourself or others.

Do not operate the machine. Take it to an Authorized Service Dealer for service.

Operating the Quick Stick®

Hold the blue trigger cap down to use the Quick Stick to move the discharge chute and the chute deflector. Release the trigger cap to lock the discharge chute and chute deflector into position (Figure 34).

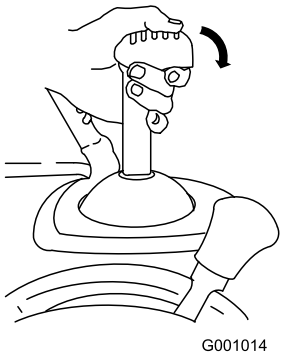

g001014

Figure 34

Moving the Discharge Chute

Hold the blue trigger cap down and move the Quick Stick to the left to move the discharge chute to the left; move the Quick Stick to the right to move the discharge chute to the right (Figure 35).

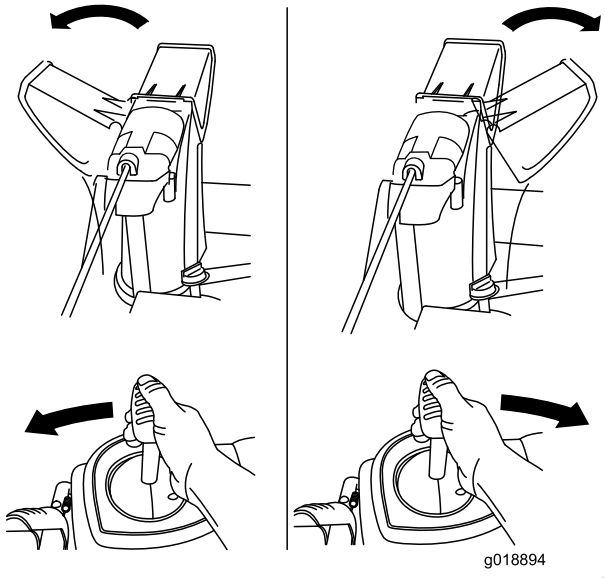

g018894

Figure 35

- If the chute does not move, refer to Adjusting the Discharge-Chute Latch (page 23).
- If the chute does not turn as far to the left as it does to the right, ensure that the cable is routed to the inside of the handles. Refer to Installing the Upper Handle (page 5).
- If the chute does not lock into place when you release the trigger cap, refer to Adjusting the Discharge-Chute Latch (page 23).

Moving the Chute Deflector

Hold the blue trigger cap down and move the Quick Stick forward to lower the chute deflector; move it rearward to raise the chute deflector (Figure 36).



G001016

g001016

Figure 36

Clearing a Clogged Discharge Chute

⚠ WARNING

If the auger/impeller is running but there is no snow coming out of the discharge chute, the discharge chute may be clogged.

Never use your hands to clear a clogged discharge chute. This could result in personal injury.

- To unclog the discharge chute, stay in the operating position and release the left (traction) lever. While running the auger/impeller, push down on the handles to raise the front of the machine a few centimeters (inches) off the pavement. Then lift the handles quickly to bump the front of the machine on the pavement. Repeat if necessary until a stream of snow comes out the discharge chute.
- If you cannot unclog the discharge chute by bumping the front of the machine, **shut off the engine, wait for all moving parts to stop, and use the snow-cleanout tool (Figure 18).**

  Important: **Unclogging the discharge chute by bumping the front of the machine on the pavement may cause the skids to move. Adjust the skids and tighten the skid bolts securely; refer to Checking and Adjusting the Skids and Scraper (page 19).**

Operating Tips

⚠ DANGER

When the machine is in operation, the impeller and auger rotate and can injure or amputate hands or feet.

- **Before adjusting, cleaning, inspecting, troubleshooting, or repairing the machine, shut off the engine and wait for all moving parts to stop. Disconnect the wire from the spark plug and keep it away from the plug to prevent someone from accidentally starting the engine.**
- **Remove an obstruction from the discharge chute; refer to Clearing a Clogged Discharge Chute (page 16). Use the snow-cleanout tool (Figure 19), not your hands, to remove an obstruction from the discharge chute.**
- **Stay behind the handles and away from the discharge opening while operating the machine.**
- **Keep your face, hands, feet, and any other part of your body or clothing away from concealed, moving, or rotating parts.**

⚠ WARNING

The impeller can throw stones, toys, and other foreign objects and cause serious personal injury to you or bystanders.

- **Keep the area to be cleared free of all objects that the auger could pick up and throw.**
- **Keep all children and pets away from the area of operation.**

- Always set the throttle to the FAST position when throwing snow.
- If the engine slows down under a load or the wheels slip, shift the machine into a lower gear.
- If the front of the machine rides up, shift the machine into a lower gear. If the front continues to ride up, lift up on the handles.

After Operation

After Operation Safety

- Never store the machine with fuel in the fuel tank inside a building where ignition sources are present, such as hot water heaters, space heaters, or clothes dryers. Allow the engine to cool before storing in any enclosure.
- When storing the machine for more than 30 days, refer to Storage (page 25) for important details.

Preventing Freeze-up after Use

- In snowy and cold conditions, some controls and moving parts may freeze. **Do not use excessive force when trying to operate frozen controls.** If you have difficulty operating any control or part, start the engine and let it run for a few minutes.
- After using the machine, let the engine run for a few minutes to prevent moving parts from freezing. Engage the auger/impeller to clear any remaining snow from inside the housing. Rotate the Quick Stick to prevent it from freezing. Shut off the engine, wait for all moving parts to stop, and remove all ice and snow from the machine.
- With the engine off, pull the recoil-start handle several times and push the electric-start button once to prevent the recoil starter and electric starter from freezing up.

Maintenance

Recommended Maintenance Schedule(s)

Maintenance Service Interval	Maintenance Procedure
After the first 2 hours	• Inspect the traction cable and adjust it if necessary. • Inspect the auger/impeller cable and adjust it if necessary.
After the first 5 hours	• Change the engine oil.
Before each use or daily	• Check the engine-oil level and add oil if necessary.
Every 50 hours	• Change the engine oil. Change the engine oil every 25 operating hours when operating the engine under a heavy load.
Every 100 hours	• Replace the spark plug.
Yearly	• Check the skids and scraper and adjust them if necessary. • Inspect the traction cable and adjust or replace it if necessary. • Inspect the auger/impeller cable and adjust or replace it if necessary. • Check the auger-gearbox oil and add oil if necessary. • Lubricate the hex shaft.
Yearly or before storage	• Check the air pressure in the tires and inflate them to 116 to 137 kPa (17 to 20 psi). • Run the engine to dry out the fuel tank and the carburetor at the end of the season. • Have an Authorized Service Dealer inspect and replace the traction drive belt and/or the auger/impeller drive belt, if necessary.

Important: **You can find more information about maintaining and servicing your machine at www.Toro.com.**

Maintenance Safety

Read the following safety precautions before performing any maintenance on the machine:

- Before performing any maintenance, service, or adjustment, shut off the engine and remove the key. If major repairs are ever needed, contact an Authorized Service Dealer.
- Check all fasteners at frequent intervals for proper tightness to ensure that the machine is in safe working condition.
- Do not change the governor settings on the engine.
- Purchase only genuine Toro replacement parts and accessories.

Preparing for Maintenance

1. Move the machine to a level surface.
2. Shut off the engine and wait for all moving parts to stop.
3. Disconnect the spark-plug wire. Refer to Replacing the Spark Plug (page 23).

Checking the Engine-Oil Level

Service Interval: Before each use or daily—Check the engine-oil level and add oil if necessary.

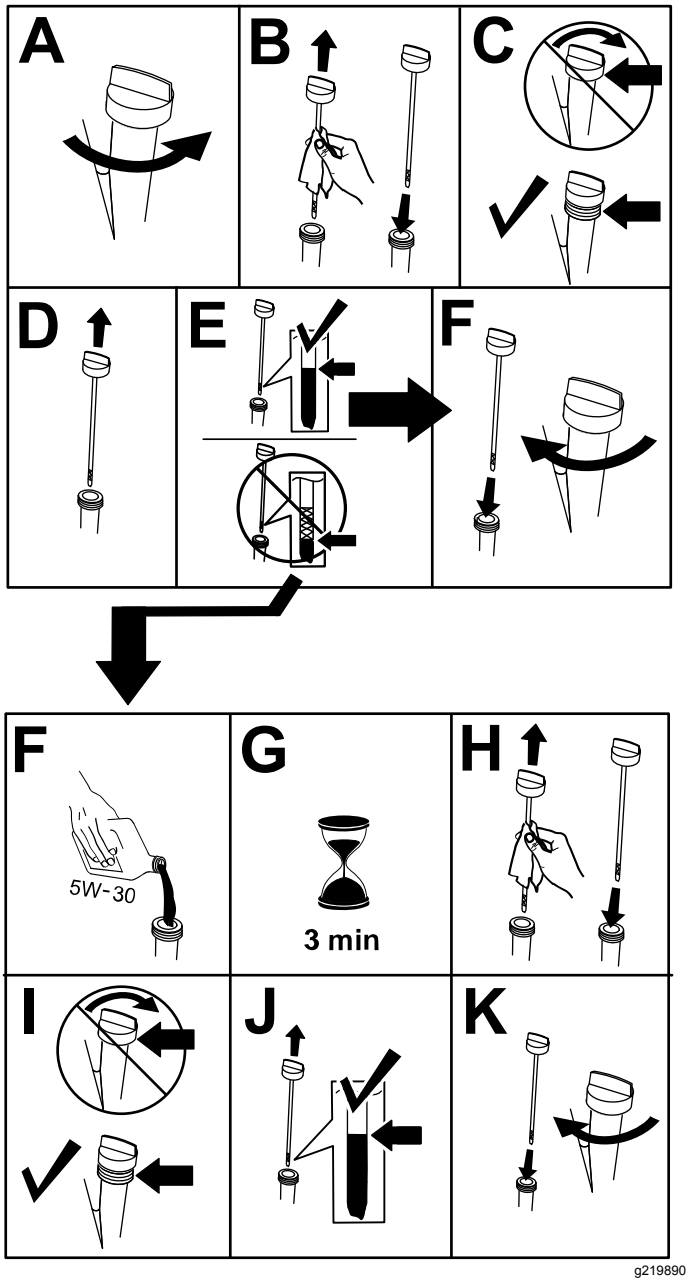

g219890

Checking and Adjusting the Skids and Scraper

Service Interval: Yearly—Check the skids and scraper and adjust them if necessary.

Check the skids to ensure that the auger does not contact the paved or gravel surface. Adjust the skids as needed to compensate for wear.

1. Check the tire pressure; refer to Checking and Adjusting the Tire Pressure (page 8).
2. Loosen the nuts that secure both skids to the auger sides until the skids slide up and down easily (Figure 38).

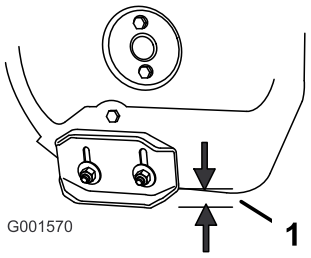

g001570

Figure 38

1. 1.3 cm (1/2 inch)

3. Support the side plates so that they are **at least** 1.3 cm (1/2 inch) above a level surface.

   Important: **The auger blades must be supported above the ground by the skids.**

4. Ensure that the scraper is 3 mm (1/8 inch) above and parallel to a level surface.

   Note: If the pavement is cracked, rough, or uneven, adjust the skids to raise the scraper. For gravel surfaces, adjust the skids further down to prevent the machine from picking up rocks.

5. Move the skids down until they are even with the ground.
6. Firmly tighten the nuts that secure both skids to the auger sides.

   Note: To quickly adjust the skids if they loosen, support the scraper 3 mm (1/8 inch) off the pavement, then adjust the skids down to the pavement.

   Note: If the skids become excessively worn, you can turn them over and set the unused side toward the pavement.

Checking and Adjusting the Traction Cable

Service Interval: After the first 2 hours—Inspect the traction cable and adjust it if necessary.

Yearly—Inspect the traction cable and adjust or replace it if necessary.

If the machine does not drive in the forward or reverse speeds or it drives when you release the traction lever, adjust the traction cable.

With the traction lever disengaged, check the pin in the elongated slot in the left side of the machine above the tire. There should be a gap of 1 to 1.5 mm (1/32 to 1/16 inch) from the front of the slot to the front edge of the pin (Figure 39).

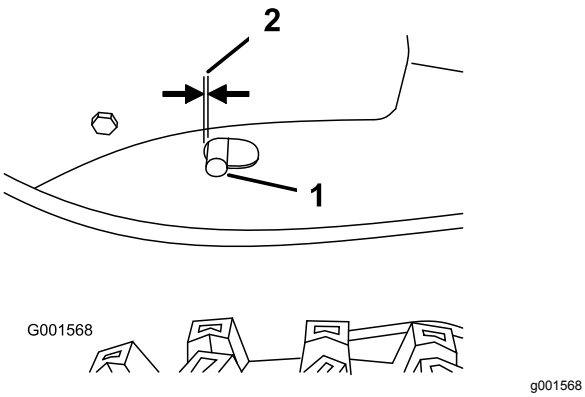

g001568

Figure 39

1. Pin
2. 1 to 1.5 mm (1/32 to 1/16 inch)

If the left (traction) cable is not properly adjusted, do the following steps:

1. Loosen the jam nut.
2. Loosen or tighten the turnbuckle to adjust the pin until it is the proper gap from the front edge of the slot.
3. Tighten the jam nut (Figure 40).

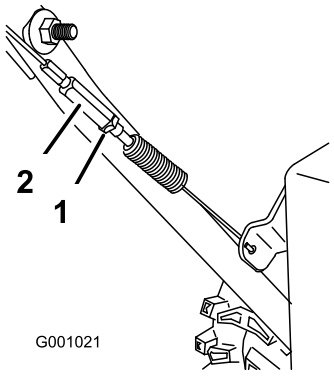

g001021

Figure 40

1. Jam nut
2. Turnbuckle

Checking and Adjusting the Auger/Impeller Cable

Service Interval: After the first 2 hours—Inspect the auger/impeller cable and adjust it if necessary.

Yearly—Inspect the auger/impeller cable and adjust or replace it if necessary.

1. Remove the 2 screws from the right side of the belt cover as shown.
2. Lift up the right side of the belt cover (Figure 41).

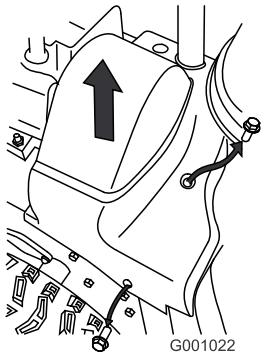

g001022

Figure 41

3. With the auger/impeller lever disengaged, ensure that the gap between the auger clutch assembly and the tab is 1.5 mm (1/16 inch) as shown in Figure 42.

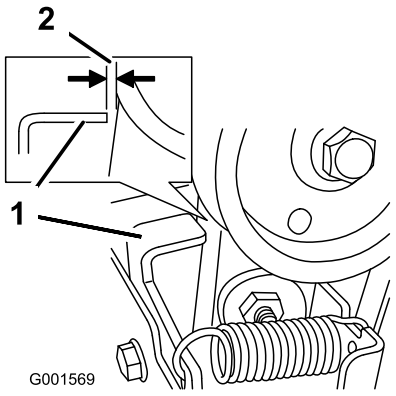

Figure 42

1. Tab
2. 1.5 mm (1/16 inch)

4. If the auger/impeller cable is not properly adjusted, do the following steps:
5. Loosen the jam nut (Figure 43).

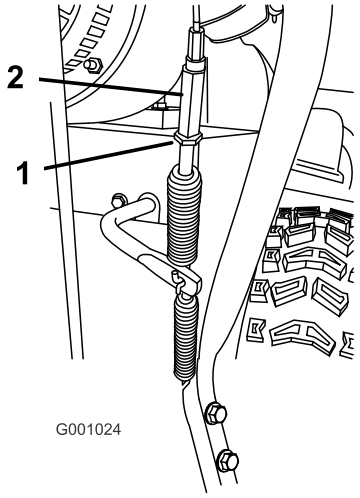

Figure 43

1. Jam nut
2. Turnbuckle

6. Loosen or tighten the turnbuckle that adjusts the tension on the cable (Figure 43).
7. Adjust the turnbuckle until you obtain the proper gap.
8. Tighten the jam nut.
9. Insert the 2 screws that you previously removed on the belt cover.
10. If the auger/impeller cable is properly adjusted but a problem remains, contact an Authorized Service Dealer.

Checking the Auger-Gearbox-Oil Level

Service Interval: Yearly—Check the auger-gearbox oil and add oil if necessary.

1. Move the machine to a level surface.
2. Clean the area around the pipe plug (Figure 44).

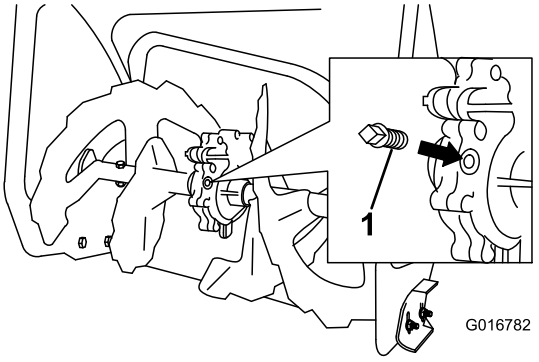

Figure 44

1. Pipe plug

3. Remove the pipe plug from the gearbox.
4. Check the oil level in the gearbox. The oil should be at the point of overflowing at the filler opening.
5. If the oil level is low, add GL-5 or GL-6, SAE 85-95 EP gear oil lubricant to the gearbox until the point of overflow.

   Note: Do not use synthetic oil.
6. Install the pipe plug in the gearbox.

Changing the Engine Oil

Service Interval: After the first 5 hours—Change the engine oil.

Every 50 hours—Change the engine oil. Change the engine oil every 25 operating hours when operating the engine under a heavy load.

If possible, run the engine for a few minutes before changing the oil because warm oil flows better and carries more contaminants.

Engine oil capacity	Models 38801 and 38802: 0.89 to 0.95 L (30 to 32 fl oz)
Oil viscosity	Refer to Figure 39.
API service classification	SJ or higher

Use Figure 45 below to select the best oil viscosity for the outdoor temperature range expected:

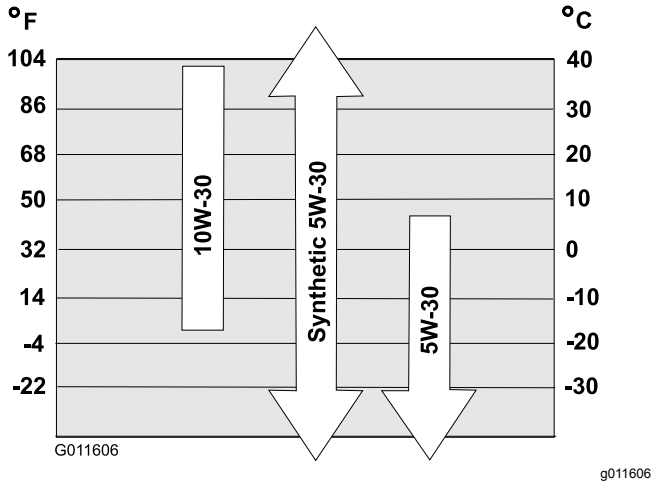

Figure 45

1. Clean the area around the oil-drain cap (Figure 46).

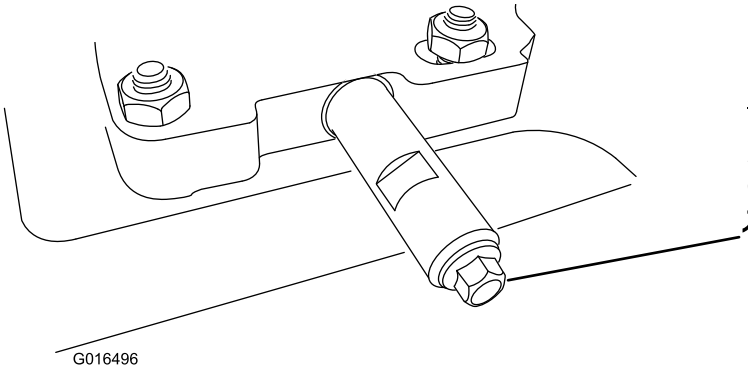

Figure 46

1. Oil-drain plug

2. Slide an oil-drain pan under the drain extension and remove the oil-drain plug.

   Note: When removing the plug, ensure that the tube does not loosen.

3. Drain the oil.

   Note: Dispose of the used oil properly at a local recycling center.

4. Install the oil-drain plug.
5. Fill the crankcase with oil.

Lubricating the Hex Shaft

Service Interval: Yearly—Lubricate the hex shaft.

Lightly lubricate the hex shaft yearly with automotive engine oil (Figure 47).

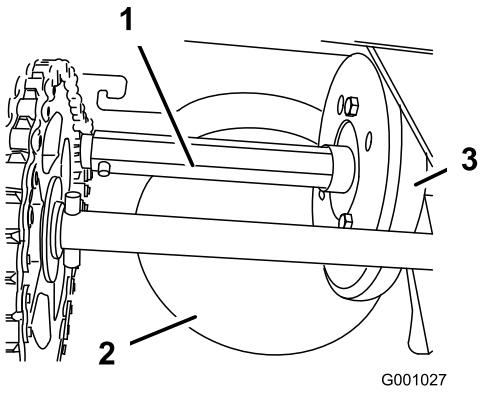

Figure 47

1. Hex shaft
2. Aluminum friction plate
3. Rubber wheel

Important: **Do not get oil on the rubber wheel or the aluminum friction drive plate because the traction drive will slip (Figure 47).**

1. Drain the fuel from the fuel tank.
2. Tip the machine forward onto its auger housing and block it so that it cannot fall.
3. Remove the back cover (Figure 48).

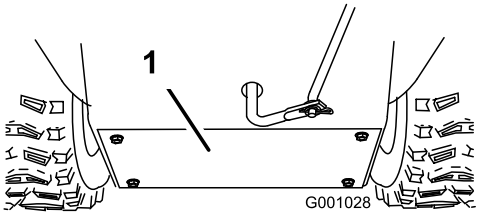

Figure 48

1. Back cover

4. Move the speed-selector lever to Position R2.
5. Dip your finger in automotive engine oil and **lightly** lubricate hex shaft.
6. Move the speed-selector lever to Position 6.
7. Lubricate the other end of the hex shaft.
8. Move the speed-selector lever forward and rearward a few times.
9. Install the back cover and return the machine to the operating position.

Replacing the Spark Plug

Service Interval: Every 100 hours—Replace the spark plug.

⚠ WARNING

Replacing the spark plug while the engine is hot can result in burns.

Wait until the engine is cool to replace the spark plug.

Use a Toro spark plug or equivalent (Champion® RN9YC or NGK BPR6ES).

1. Remove the boot (Figure 49).

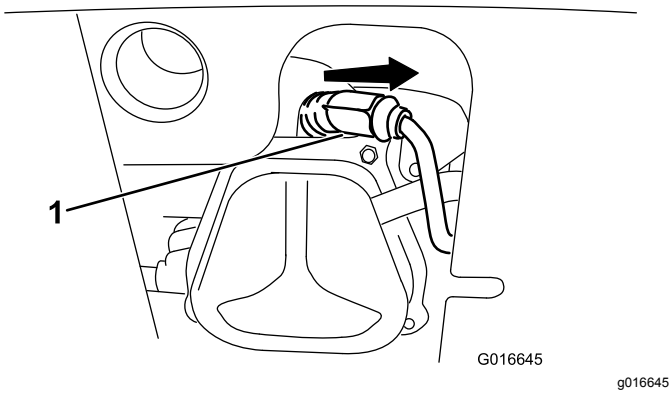

g016645

Figure 49

1. Spark-plug boot

2. Clean around the base of the spark plug.

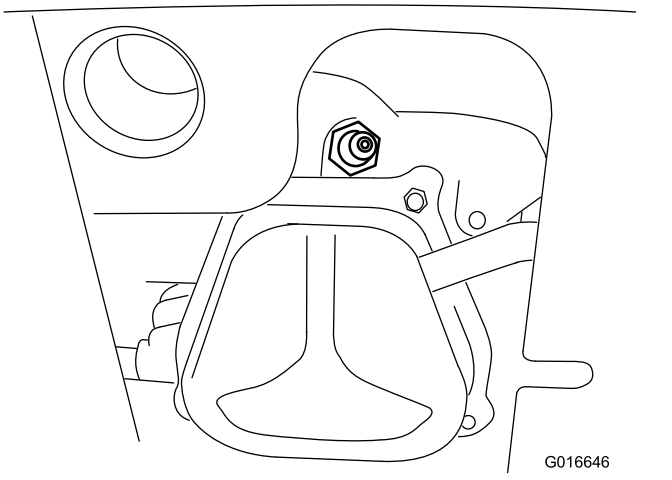

g016646

Figure 50

3. Remove and discard the old spark plug.

   Note: You will need a ratchet wrench extension to remove the spark plug.

4. Set the gap between the electrodes on a new spark plug at 0.76 mm (0.030 inch) as shown in Figure 51.

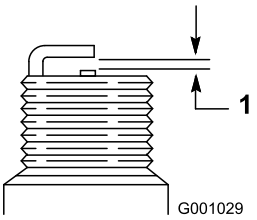

g001029

Figure 51

1. 0.76 mm (0.030 inch)

5. Install the new spark plug, tighten it firmly, and attach the ignition wire to the spark plug.

   Note: Ensure that the ignition wire snaps completely into place on the spark plug.

Adjusting the Discharge-Chute Latch

If the discharge chute does not lock into the desired position or does not unlock so that you can move it to another position, adjust the discharge-chute latch.

1. Remove the fastener on the gear cover (Figure 52), lift the front of the cover up, and slide it back and out of the way.

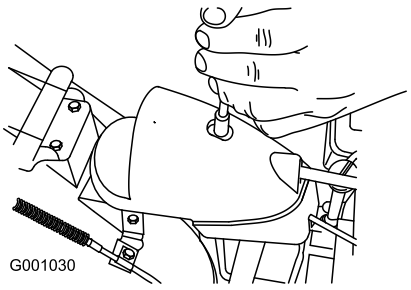

g001030

Figure 52

2. Loosen the bolt on the cable clamp (Figure 53).

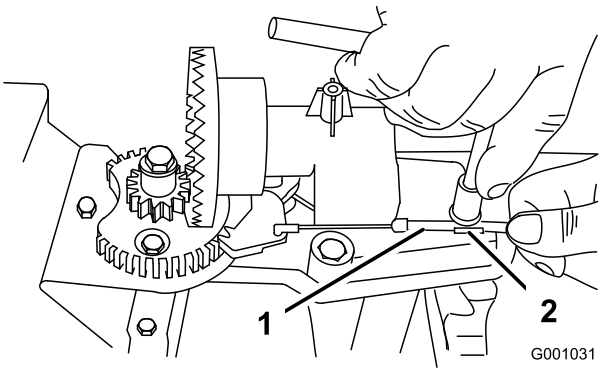

g001031

Figure 53

1. Cable conduit
2. Cable clamp

3. Grasp the cable conduit and move it toward the front of the machine until the discharge-chute latch fully engages the gear teeth (Figure 53 and Figure 54).

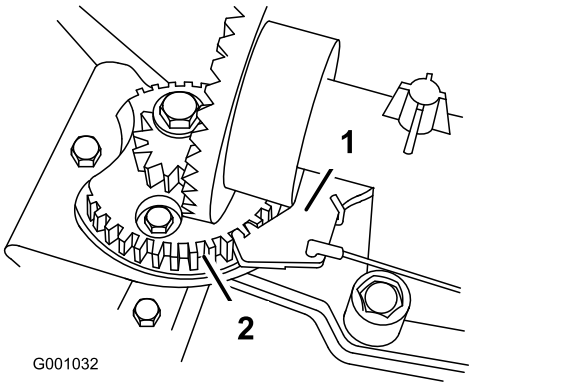

g001032

Figure 54

1. Discharge-chute latch 2. Gear teeth

Note: The latch is spring loaded and naturally moves into the teeth of the gear (Figure 54).

4. Remove any slack in the cable by pulling the cable conduit rearward.
5. Tighten the bolt on the cable clamp, being careful not to strip the plastic part.
6. Install and secure the gear cover.

Replacing the Drive Belts

If the auger/impeller drive belt or the traction-drive belt becomes worn, oil-soaked, or otherwise damaged, have an Authorized Service Dealer replace the belt.

Replacing the Headlight Bulb

Use a Toro light bulb or equivalent (GE 899 37W halogen bulb). Do not touch the bulb with your hands or allow dirt or moisture to come into contact with the bulb.

1. Remove the wire connector from the back of the headlight (Figure 55).

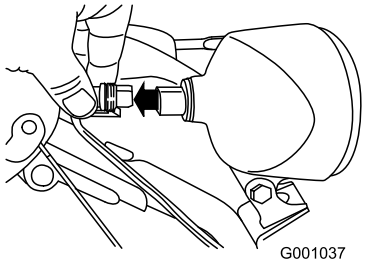

g001037

Figure 55

2. Turn the base of the bulb counterclockwise until it stops (Figure 56).

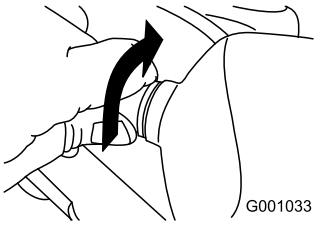

g001033

Figure 56

3. Remove the bulb straight out from the back of the headlight (Figure 57).

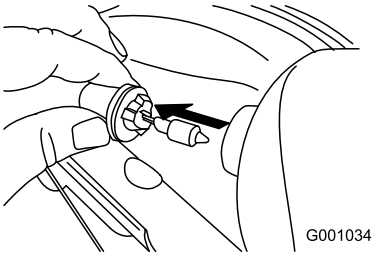

g001034

Figure 57

4. Insert a new bulb into the back of the headlight (Figure 58).

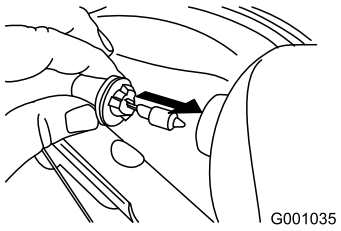

g001035

Figure 58

5. Turn the base of the bulb clockwise until it is snug (Figure 59).

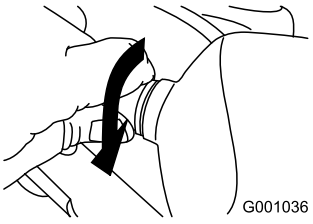

g001036

Figure 59

6. Insert the wire connector straight into the back of the headlight until it is securely in place (Figure 60).

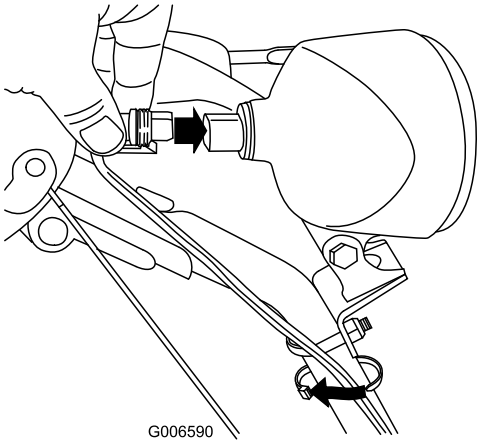

g006590

Figure 60

Storage

Storing the Machine

1. On the last refueling of the year, add fuel stabilizer to fresh fuel as directed by the fuel stabilizer manufacturer.

   Important: **Do not store fuel longer than that suggested by the fuel-stabilizer manufacturer.**
2. Run the engine for 10 minutes to distribute the conditioned fuel through the fuel system.
3. Run the machine until the engine runs out of fuel.
4. Prime the engine and start it again.
5. Allow the engine to run until it shuts off. When you can no longer start the engine, it is sufficiently dry.
6. Shut off the engine and allow it to cool.
7. Remove the ignition key.
8. Clean the machine thoroughly.
9. Touch up chipped surfaces with paint available from an Authorized Service Dealer. Sand affected areas before painting, and use a rust preventative to prevent the metal parts from rusting.
10. Tighten all loose screws, bolts, and locknuts. Repair or replace any damaged parts.
11. Cover the machine and store it in a clean, dry place out of the reach of children.

Removing the Machine from Storage

Perform the annual maintenance procedures as given in the Recommended Maintenance Schedule; refer to Maintenance (page 18).

Troubleshooting

Problem	Possible Cause	Corrective Action
The electric starter does not turn (electric-start models only).	1. The power cord is disconnected at the outlet or the machine. 2. The power cord is worn, corroded, or damaged. 3. The power outlet is not energized.	1. Connect the power cord to the outlet and/or the machine. 2. Replace the power cord. 3. Have a qualified electrician energize the outlet.
The engine does not start or starts hard.	1. The key is not in the ignition or is in the STOP position. 2. The choke is in the OFF position and the primer has not been pressed. 3. The fuel-shutoff valve is not open. 4. The throttle is not in the FAST position. 5. The fuel tank is empty or the fuel system contains stale fuel. 6. The spark-plug wire is loose or disconnected. 7. The spark plug is pitted, fouled, or the gap is incorrect. 8. The fuel-vent cap is restricted. 9. The engine-oil level in the engine crankcase is too low or too high.	1. Insert the key into the ignition and turn it to the ON position. 2. Move the choke to the ON position and press the primer 3 times. 3. Open the fuel-shutoff valve. 4. Move the throttle to the FAST position. 5. Drain and/or fill the fuel tank with fresh fuel (not more than 30 days old). If the problem persists, contact an Authorized Service Dealer. 6. Connect the wire to the spark plug. 7. Check the spark plug and adjust the gap if necessary. Replace the spark plug if it is pitted, fouled, or cracked. 8. Remove the vent restriction or replace the fuel cap. 9. Add or drain oil to adjust the oil level in the engine crankcase to the Full mark on the dipstick.
The engine runs rough.	1. The choke is in the ON position. 2. The fuel-shutoff valve is not completely open. 3. The fuel tank is nearly empty or contains stale fuel. 4. The spark-plug wire is loose. 5. The spark plug is pitted, fouled, or the gap is incorrect. 6. The engine-oil level in the engine crankcase is too low or too high.	1. Move the choke to the OFF position. 2. Open the fuel-shutoff valve. 3. Drain and fill the fuel tank with fresh fuel (not more than 30 days old). If the problem persists, contact an Authorized Service Dealer. 4. Connect the wire to the spark plug. 5. Check the spark plug and adjust the gap if necessary. Replace the spark plug if it is pitted, fouled, or cracked. 6. Add or drain oil to adjust the oil level in the engine crankcase to the Full mark on the dipstick.

Problem	Possible Cause	Corrective Action
The engine runs, but the machine discharges snow poorly or not at all.	1. The throttle is not in the FAST position when throwing snow.	1. Move the throttle to the FAST position.
	2. The machine is moving too fast to clear the snow.	2. Shift the machine into a lower gear.
	3. You are trying to remove too much snow per swath.	3. Reduce the amount of snow removed per swath.
	4. You are trying to remove extremely heavy or wet snow.	4. Do not overload the machine with extremely heavy or wet snow.
	5. The discharge chute is plugged.	5. Unclog the discharge chute.
	6. The auger/impeller drive belt is loose or is off the pulley.	6. Install and/or adjust the auger/impeller drive belt; refer to www.Toro.com for servicing information or take the machine to an Authorized Service Dealer.
	7. The auger/impeller drive belt is worn or broken.	7. Replace the auger/impeller drive belt; refer to www.Toro.com for servicing information or take the machine to an Authorized Service Dealer.
The discharge chute either does not lock into place or does not move.	1. The discharge-chute latch is not properly adjusted.	1. Adjust the discharge-chute latch.
The machine does not properly clear the snow off the surface.	1. The skids and/or scraper are not properly adjusted.	1. Adjust the skids and/or the scraper.
	2. The pressure in the tires is not equal.	2. Check and adjust the pressure in 1 or both tires.



Count on it.