Form No. 3415-680 Rev A

Trans Pro 100 Tow-Behind Trailer

Model No. 04240—Serial No. 310000001 and Up

Installation Instructions

Safety

Safety and Instructional Decals

Safety decals and instructions are easily visible to the operator and are located near any area of potential danger. Replace any decal that is damaged or missing.

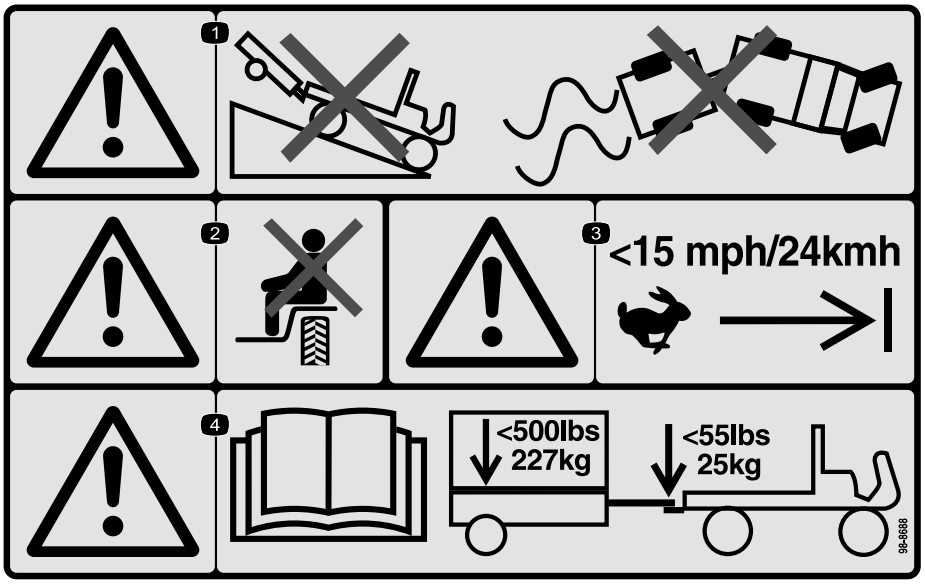

decal98-8688

98-8688

1. Warning—do not drive the vehicle with a trailer down a hill; do not lose control of the vehicle and trailer.
2. Warning—do not carry passengers.
3. Warning—do not exceed 24 km/h (15 mph).
4. Warning—read the *Operator's Manual*; the maximum trailer weight is 227 kg (500 lb) and the maximum tongue weight is 25 kg (55 lb).

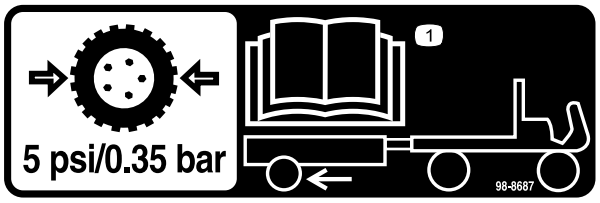

decal98-8687

98-8687

1. The trailer tires should be inflated to 0.35 bar (5 psi); read the *Operator's Manual*.

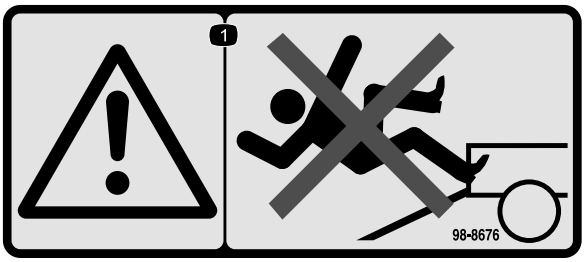

decal98-8676

98-8676

1. Warning—do not climb the ramp, you could slip and fall.

© 2017— The Toro® Company
8111 Lyndale Avenue South
Bloomington, MN 55420

Register at www.Toro.com.

CE

Original Instructions (EN)
Printed in the USA
All Rights Reserved

3415-680 A

Installation

Loose Parts

Use the chart below to verify that all parts have been shipped.

Description	Qty.	Use
Trailer bed Tongue assembly Axle hub Wheel assembly Trailer ramp Bolt (3/8 x 2-3/4 inches) Spacer Nylon Locknuts (3/8 inch) Carriage bolts (3/8 x 1 inches) Locknuts (3/8 inch) Lug nuts Hinge rod Cotter pins	1 1 2 2 1 2 2 2 8 8 8 1 2	Assemble the trailer.
No parts required	–	Adjust the trailer tongue.
No parts required	–	Load the trailer.

Assembling the Trailer

1. Mount the tongue assembly to the mounting bracket on the underside of the trailer bed with 2 bolts (3/8 x 2-3/4 inches), 2 spacers and 2 locknuts. For most applications, use the front set of mounting holes in the tongue and bracket (Figure 1).

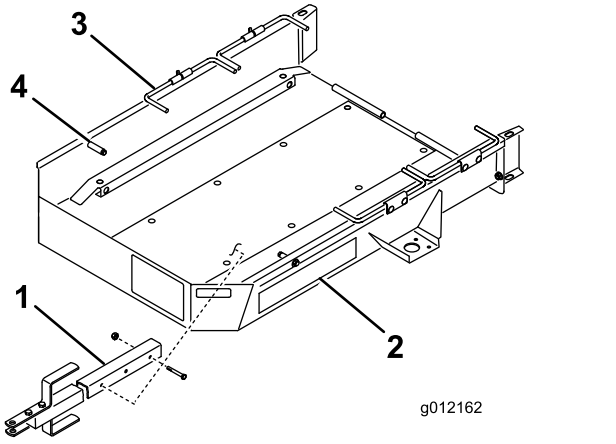

g012162

Figure 1

1. Tongue assembly
2. Trailer bed
3. Wheel rod
4. Stop

2. Using the 4 carriage bolts and 4 locknuts, mount an axle to the bottom side of the mounting brackets on each side of the trailer bed. Position the axle, carriage bolts, and nuts as shown in Figure 2.

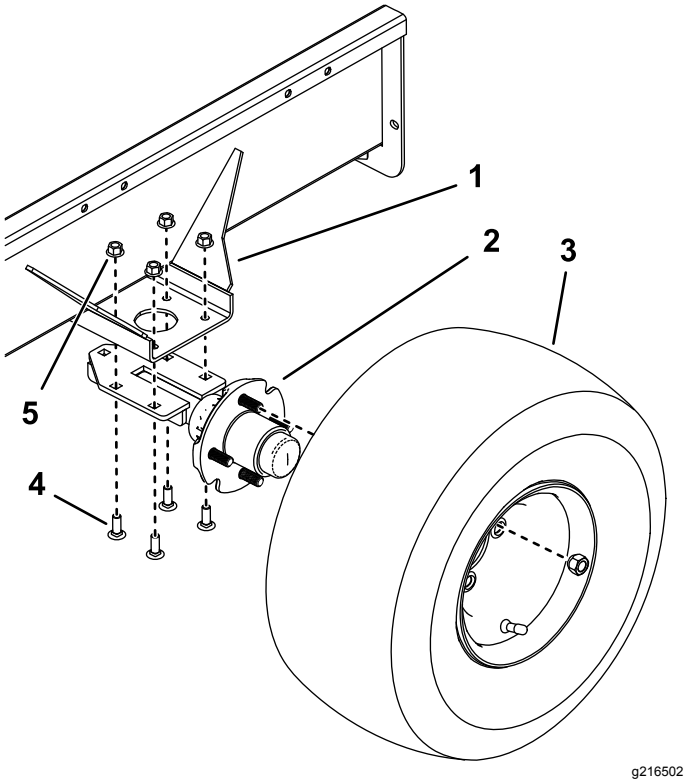

g216502

Figure 2

1. Mounting bracket
2. Axle
3. Wheel assembly
4. Carriage bolt
5. Locknut

3. Mount a wheel assembly to each axle hub with 4 lug nuts (Figure 2). Tighten the nuts to 80 ft-lb (108.47 N·m). Inflate the tires to 5 psi (34 kPa).

   Note: To prevent premature wear of the tires, the wheels should have 0 to 3 (0 to 1/8 inch) toe-in when they are pointed straight ahead. To check the toe-in, scribe a line around the center of each tire. Measure the center-to-center distance (Figure 3), at the wheel hub height, in front and back of the tires. Adjust the axle mounting brackets so that the measurement at the front of the tire is within 3 mm (1/8 inch) less than the measurement at the back of the tire.

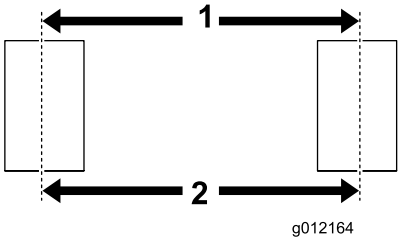

g012164

Figure 3

1. Front center-to-center distance
2. Rear center-to-center distance

Important: **Higher tire pressure may damage the machine.**

4. Mount the trailer ramp to the rear of the trailer bed with the hinge rod and 2 cotter pins (Figure 4).

   Note: Apply a light coating of grease to the hinge rod prior to assembly.

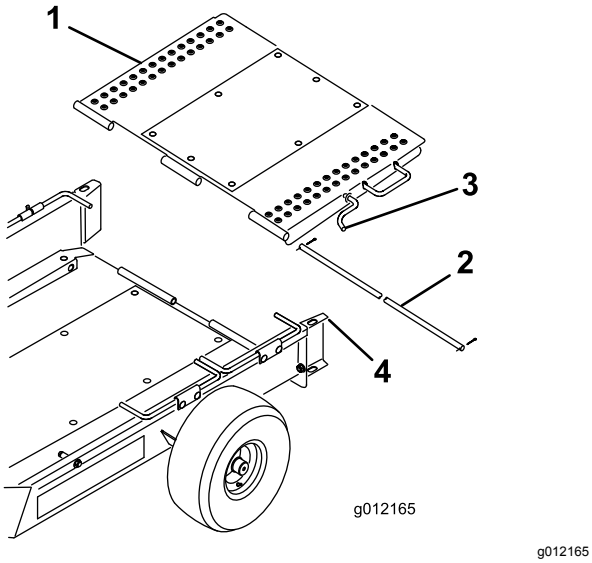

g012165

Figure 4

1. Trailer ramp
2. Hinge rod
3. Ramp latch
4. Wheel guide

5. Pivot the trailer ramp upward and hook the ramp latch into the hole in the top of the wheel guide (Figure 4).

Adjusting Trailer Tongue

Adjust the trailer tongue height until the trailer is parallel to the ground or until it fits the tow vehicle hitch. Move the spacers to the top or bottom of the tongue until you attain the desired location (Figure 5).

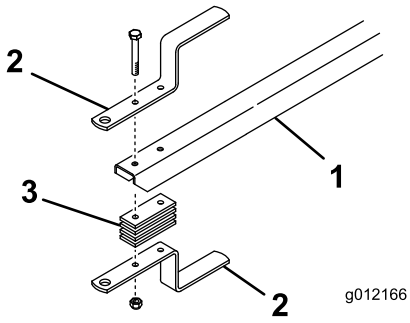

g012166

Figure 5

1. Trailer tongue
2. Trailer hitch
3. Hitch spacer

Loading the Trailer

1. Unhook the ramp latch from the wheel guide and lower the ramp to ground.
2. Pivot the first set of wheel rods upward.
3. Remove the baskets from the machine, disengage the reel drive, and move the throttle to the slowest position. **Slowly** drive the machine onto the trailer until the transport wheels contact the trailer stops (Figure 1).
4. Shut off the engine and engage the parking brake.
5. Pivot the first set of wheel rods downward behind the transport wheels (Figure 1).
6. Repeat this procedure if you are hauling 2 machines.

   Note: Use the first set of wheel rods as the stop for the second machine (Figure 6).

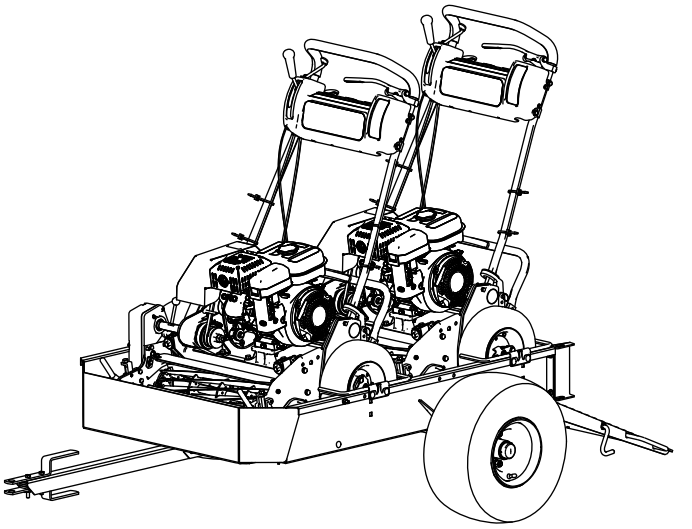

g216504

Figure 6

7. Pivot the trailer ramp upward and hook the ramp latch into the hole in the top of the wheel guide (Figure 4).
8. Store the baskets in the tow vehicle.

Operation

Operating Tips

- You can use the trailer for the Greensmaster 1000, 1010, 2000, Flex 21, 2100 and eFlex 2100 machines. You can also use it with the Greensmaster 800, Flex 18, 1800 and eFlex 1800 machines if they are equipped with the Transport Wheel Kit, (Model 04123). A Greensmaster 1600, 1610, or 2600 machine fits if you remove the transport axles from the machine and you remove the rails from the trailer bed. Towing other products may damage the axles and transmissions that continue to rotate when towed.
- ***Use only a vehicle with the proper tow rating.*** The trailer and 2 greens mowing machines weigh approximately 800 lb. Ensure that the tow vehicle has adequate braking and handling capacity by checking the recommendations of the vehicle manufacturer.
- Ensure that the trailer is properly connected to the tow vehicle before loading or unloading the machines to prevent the tongue from suddenly moving or flipping up.
- The trailer adds extra towing weight to the vehicle. Drive the vehicle safely.
  - Do not drive the machine on highways or public roads.
  - Always **slow** the tow vehicle when approaching and while making a turn.
  - Always **slow** the tow vehicle when driving in unfamiliar areas or over rough terrain.
  - Always **slow** the tow vehicle when changing the direction of travel or preparing to stop.
  - Always **slow** the tow vehicle when turning or driving on slopes.
  - ***Do not*** make sudden or sharp turns. ***Do not*** suddenly change direction of travel on an incline, ramp, grade, slope, or similar surface.
  - Always adjust the tow vehicle speed to allow for existing ground conditions, such as wet slick surfaces, loose sand or gravel, and/or low-visibility conditions, such as dim or bright lighting, fog, mist, or rain.
  - Be especially careful when driving a heavily loaded vehicle down an incline or slope. Drive the vehicle up and down the face of the slopes, inclines, or grades whenever possible. ***Do not*** drive across the face of a slope if at all possible. There is a risk of upsetting the vehicle, which can result in serious injury or death.
- Before backing up, look behind you and ensure that it is clear of people and objects. Back up slowly and watch the trailer movement closely.
- Use extreme caution and slow speed when backing up the trailer and tow vehicle.
- Watch out for traffic when near or crossing roads. Always yield the right of way to pedestrians and other vehicles.
- If the trailer begins to vibrate abnormally, stop immediately. Shut off the tow vehicle engine. Repair all damage before towing.
- Before servicing or making any adjustments to the trailer, do the following:
  - Stop the tow vehicle and engage the parking brake.
  - Shut off the tow vehicle engine and remove the key.
- Keep all nuts, bolts, and other fasteners tightened securely. Replace any parts removed during servicing or when making adjustments.

Notes:

Notes:

The Toro Total Coverage Guarantee

A Limited Warranty

Conditions and Products Covered

The Toro Company and its affiliate, Toro Warranty Company, pursuant to an agreement between them, jointly warrant your Toro Commercial product ("Product") to be free from defects in materials or workmanship for two years or 1500 operational hours*, whichever occurs first. This warranty is applicable to all products with the exception of Aerators (refer to separate warranty statements for these products). Where a warrantable condition exists, we will repair the Product at no cost to you including diagnostics, labor, parts, and transportation. This warranty begins on the date the Product is delivered to the original retail purchaser.
* Product equipped with an hour meter.

Instructions for Obtaining Warranty Service

You are responsible for notifying the Commercial Products Distributor or Authorized Commercial Products Dealer from whom you purchased the Product as soon as you believe a warrantable condition exists. If you need help locating a Commercial Products Distributor or Authorized Dealer, or if you have questions regarding your warranty rights or responsibilities, you may contact us at:

Toro Commercial Products Service Department
Toro Warranty Company
8111 Lyndale Avenue South
Bloomington, MN 55420-1196

952–888–8801 or 800–952–2740
E-mail: commercial.warranty@toro.com

Owner Responsibilities

As the Product owner, you are responsible for required maintenance and adjustments stated in your *Operator's Manual*. Failure to perform required maintenance and adjustments can be grounds for disallowing a warranty claim.

Items and Conditions Not Covered

Not all product failures or malfunctions that occur during the warranty period are defects in materials or workmanship. This warranty does not cover the following:

- Product failures which result from the use of non-Toro replacement parts, or from installation and use of add-on, or modified non-Toro branded accessories and products. A separate warranty may be provided by the manufacturer of these items.
- Product failures which result from failure to perform recommended maintenance and/or adjustments. Failure to properly maintain your Toro product per the Recommended Maintenance listed in the *Operator's Manual* can result in claims for warranty being denied.
- Product failures which result from operating the Product in an abusive, negligent, or reckless manner.
- Parts subject to consumption through use unless found to be defective. Examples of parts which are consumed, or used up, during normal Product operation include, but are not limited to, brake pads and linings, clutch linings, blades, reels, rollers and bearings (sealed or greasable), bed knives, spark plugs, castor wheels and bearings, tires, filters, belts, and certain sprayer components such as diaphragms, nozzles, and check valves, etc.
- Failures caused by outside influence. Conditions considered to be outside influence include, but are not limited to, weather, storage practices, contamination, use of unapproved fuels, coolants, lubricants, additives, fertilizers, water, or chemicals, etc.
- Failure or performance issues due to the use of fuels (e.g. gasoline, diesel, or biodiesel) that do not conform to their respective industry standards.
- Normal noise, vibration, wear and tear, and deterioration.
- Normal "wear and tear" includes, but is not limited to, damage to seats due to wear or abrasion, worn painted surfaces, scratched decals or windows, etc.

Parts

Parts scheduled for replacement as required maintenance are warranted for the period of time up to the scheduled replacement time for that part. Parts replaced under this warranty are covered for the duration of the original product warranty and become the property of Toro. Toro will make the final decision whether to repair any existing part or assembly or replace it. Toro may use remanufactured parts for warranty repairs.

Deep Cycle and Lithium-Ion Battery Warranty:

Deep cycle and Lithium-Ion batteries have a specified total number of kilowatt-hours they can deliver during their lifetime. Operating, recharging, and maintenance techniques can extend or reduce total battery life. As the batteries in this product are consumed, the amount of useful work between charging intervals will slowly decrease until the battery is completely worn out. Replacement of worn out batteries, due to normal consumption, is the responsibility of the product owner. Battery replacement may be required during the normal product warranty period at owner's expense. Note: (Lithium-Ion battery only): A Lithium-Ion battery has a part only prorated warranty beginning year 3 through year 5 based on the time in service and kilowatt hours used. Refer to the *Operator's Manual* for additional information.

Maintenance is at Owner's Expense

Engine tune-up, lubrication, cleaning and polishing, replacement of filters, coolant, and completing recommended maintenance are some of the normal services Toro products require that are at the owner's expense.

General Conditions

Repair by an Authorized Toro Distributor or Dealer is your sole remedy under this warranty.

Neither The Toro Company nor Toro Warranty Company is liable for indirect, incidental or consequential damages in connection with the use of the Toro Products covered by this warranty, including any cost or expense of providing substitute equipment or service during reasonable periods of malfunction or non-use pending completion of repairs under this warranty. Except for the Emissions warranty referenced below, if applicable, there is no other express warranty. All implied warranties of merchantability and fitness for use are limited to the duration of this express warranty.

Some states do not allow exclusions of incidental or consequential damages, or limitations on how long an implied warranty lasts, so the above exclusions and limitations may not apply to you. This warranty gives you specific legal rights, and you may also have other rights which vary from state to state.

Note regarding engine warranty:

The Emissions Control System on your Product may be covered by a separate warranty meeting requirements established by the U.S. Environmental Protection Agency (EPA) and/or the California Air Resources Board (CARB). The hour limitations set forth above do not apply to the Emissions Control System Warranty. Refer to the Engine Emission Control Warranty Statement supplied with your product or contained in the engine manufacturer's documentation for details

Countries Other than the United States or Canada

Customers who have purchased Toro products exported from the United States or Canada should contact their Toro Distributor (Dealer) to obtain guarantee policies for your country, province, or state. If for any reason you are dissatisfied with your Distributor's service or have difficulty obtaining guarantee information, contact the Toro importer.

374-0253 Rev B