Form No. 3415-937 Rev A

TORO®

Count on it.

Parts Catalog

1800 Power Curve®

Snowthrower

Model No. 38303—Serial No. 318000001 and Up

Register at www.Toro.com.
Original Instructions (EN)

CE

3415-937 A

Ordering Replacement Parts

To order replacement parts, please supply the part number, the quantity, and the description of each part desired.

Understanding Reference Numbers

Each identified part in an illustration has a reference number. The reference number for a part also appears in the parts list, along with other information about the part.

This catalog uses two special reference number formats, one to indicate parts in a service assembly and another to indicate the quantity of a given part in an illustration.

Service Assembly Reference Numbers

Parts in service assemblies have reference numbers in the form a:b. The a represents the reference number of the entire service assembly and the b represents a sequential number unique to each part within the service assembly.

For example, a wheel assembly might be identified by reference number 6, the tire by 6:1, the valve by 6:2, and the wheel by 6:3. When you order the assembly identified by reference number 6, you receive all parts identified by reference numbers 6:1,6:2, and 6:3. However, you may also order any part individually. Reference numbers of this type appear in illustration and in parts lists.

Reference Numbers Indicating Quantity

In an illustration, if a reference number indicates more than one part, the reference number has the form nX y. The n represents the quantity of the part, the X is the multiplication symbol, and the y represents the reference number.

For example, in an illustration, the reference number 2X 37 means that two of the parts identified by reference number 37 are indicated.

Contents

Frame Assembly 4
Idler and Pulley Assembly 5
Chute Assembly 6
Handle Assembly 7

© 2017—The Toro® Company
8111 Lyndale Avenue South
Bloomington, MN 55420

Contact us at www.Toro.com.
Printed in the USA.
All Rights Reserved

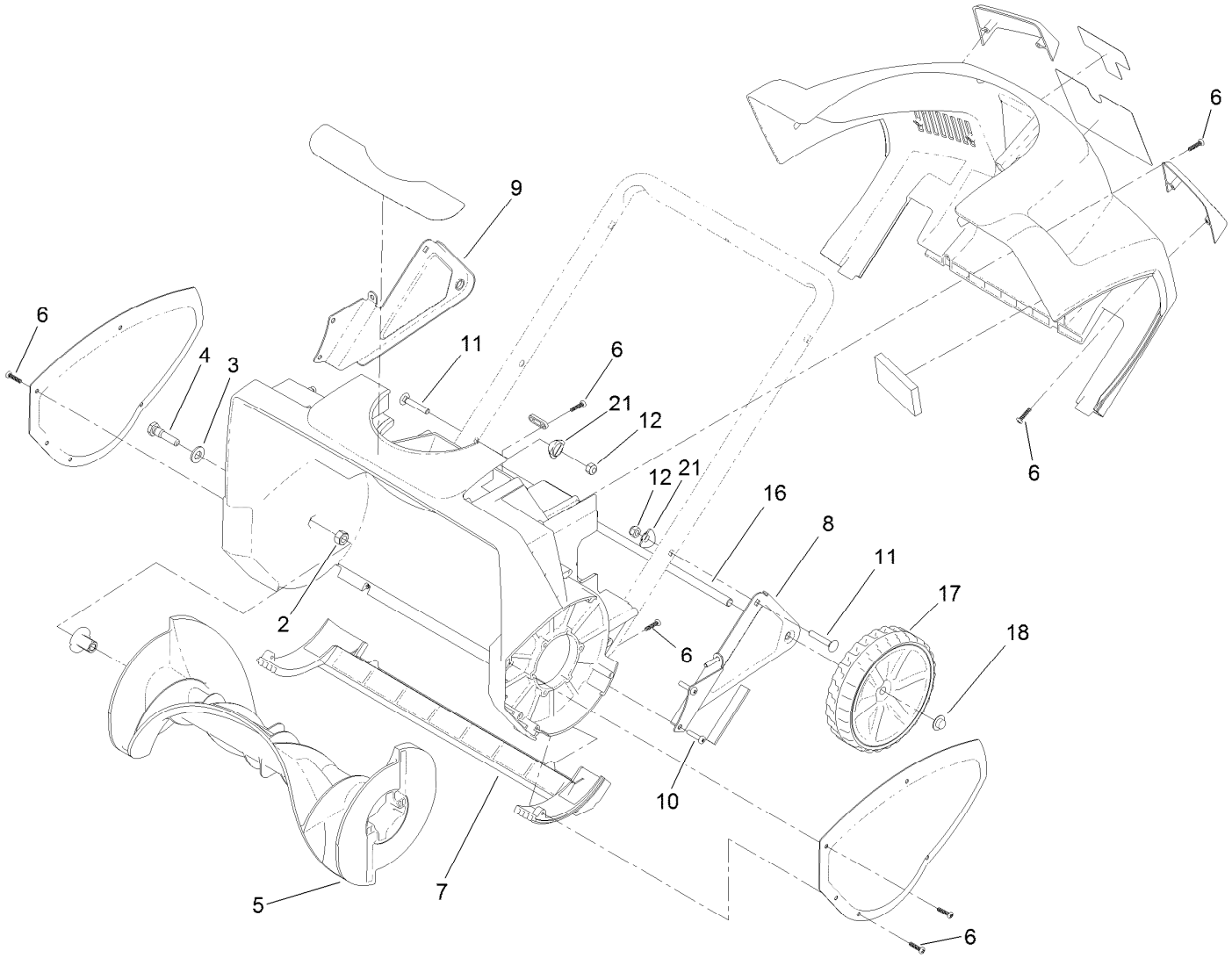

Frame Assembly

Ref.	*Part Number*	*Qty.*	*Description*
2	137-3118	1	Nut-Hex
3	115-1166	1	Washer-Flat
4	38-8211	1	Pin-Rotor
5	117-8775	1	Rotor ASM
6	94-4496	18	Screw-PPH
7	117-2840	1	Scraper
8	114-9194-03	1	Bracket-Wheel, LH
9	114-9195-03	1	Bracket-Wheel, RH
10	32144-36	6	Screw-PPH
11	137-3011	2	Bolt-CARR
12	137-3094	2	Nut-Hex
16	114-9208-03	1	Axle-Wheel
17	117-2306	2	Wheel ASM
18	3290-320	2	Nut-Push
21	137-3009	2	Washer-Cup

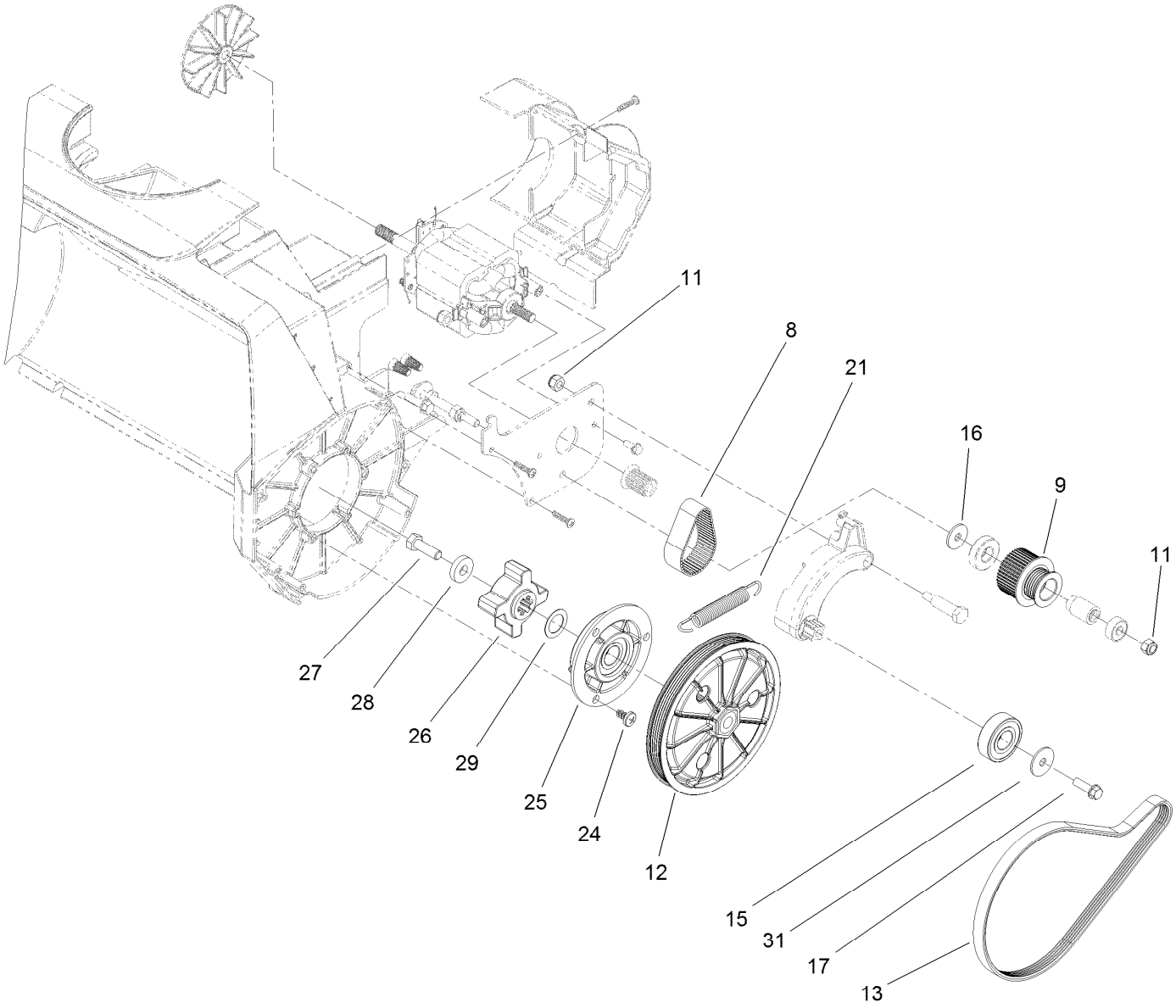

Idler and Pulley Assembly

Ref.	Part Number	Qty.	Description
8	73-0160	1	Belt-Pulley, Idler/Driver
9	117-8770	1	Idler Pulley ASM
11	137-3094	2	Nut-Hex
12	117-8763	1	Pulley ASM
13	115-1192	1	Belt-Drive
15	38-7820	1	Bearing-Ball
16	137-3106	1	Washer-Plain
17	137-3099	1	Screw-Plastite, HWH

Ref.	Part Number	Qty.	Description
21	117-2804	1	Spring-Idler
24	105-6968	3	Screw-Seat, Switch
25	117-2887	1	Pillow Block ASM
26	117-8762	1	Coupler-Pulley
27	117-2888	1	Screw-HH
28	27-9560	1	Spacer
29	137-3120	1	Washer-Plain
31	114-9049	1	Washer-Flat

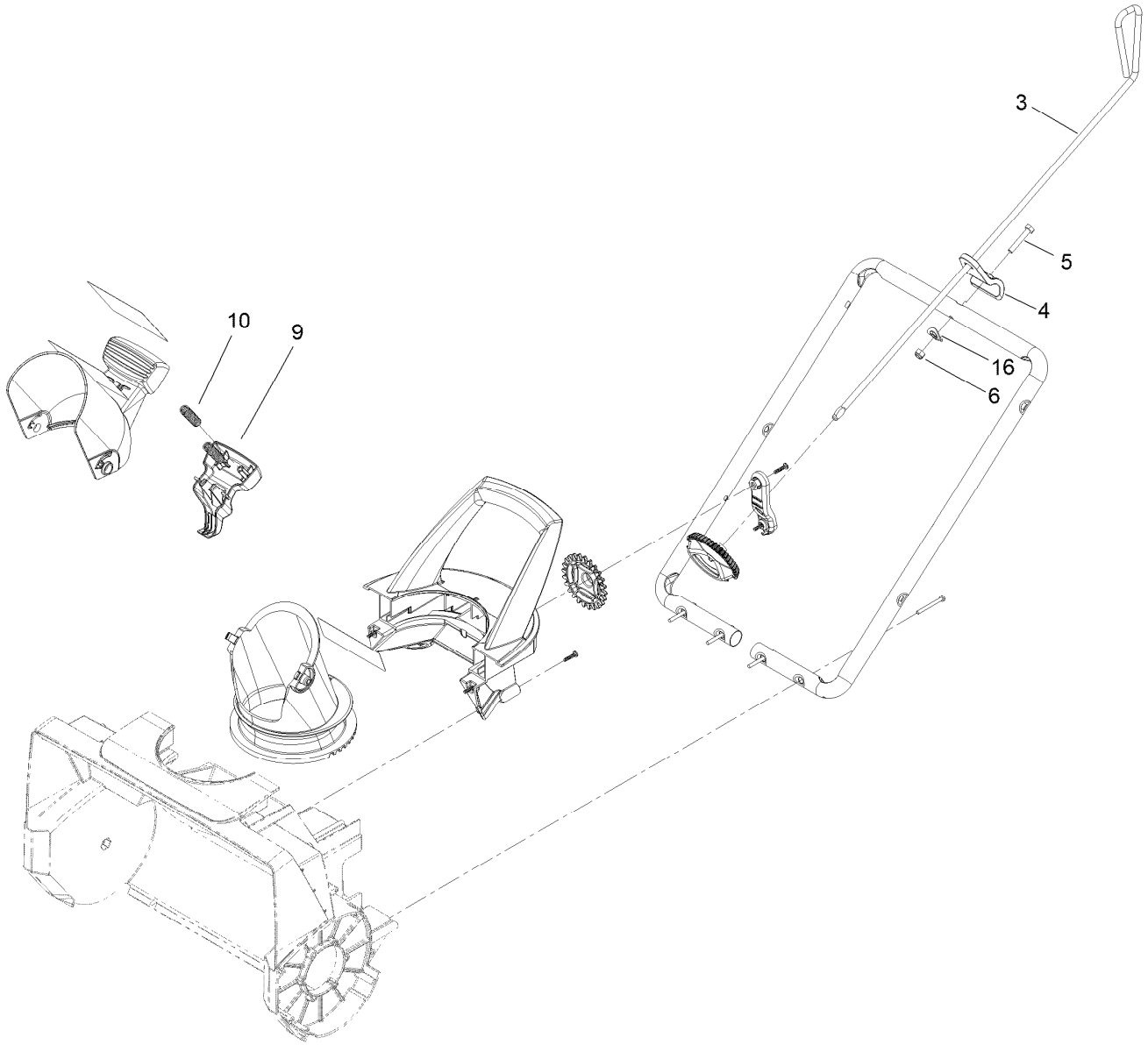

Chute Assembly

Ref.	*Part Number*	*Qty.*	*Description*
3	114-9240-03	1	Rod-Control, Chute
4	114-9241	1	Guide-Rod, Chute
5	137-3094	1	Nut-Hex
6	137-3116	1	Screw-HH TAP
9	117-2314	1	Trigger-Deflector
10	136-7136	2	Spring-Compression
16	137-3009	1	Washer-Cup

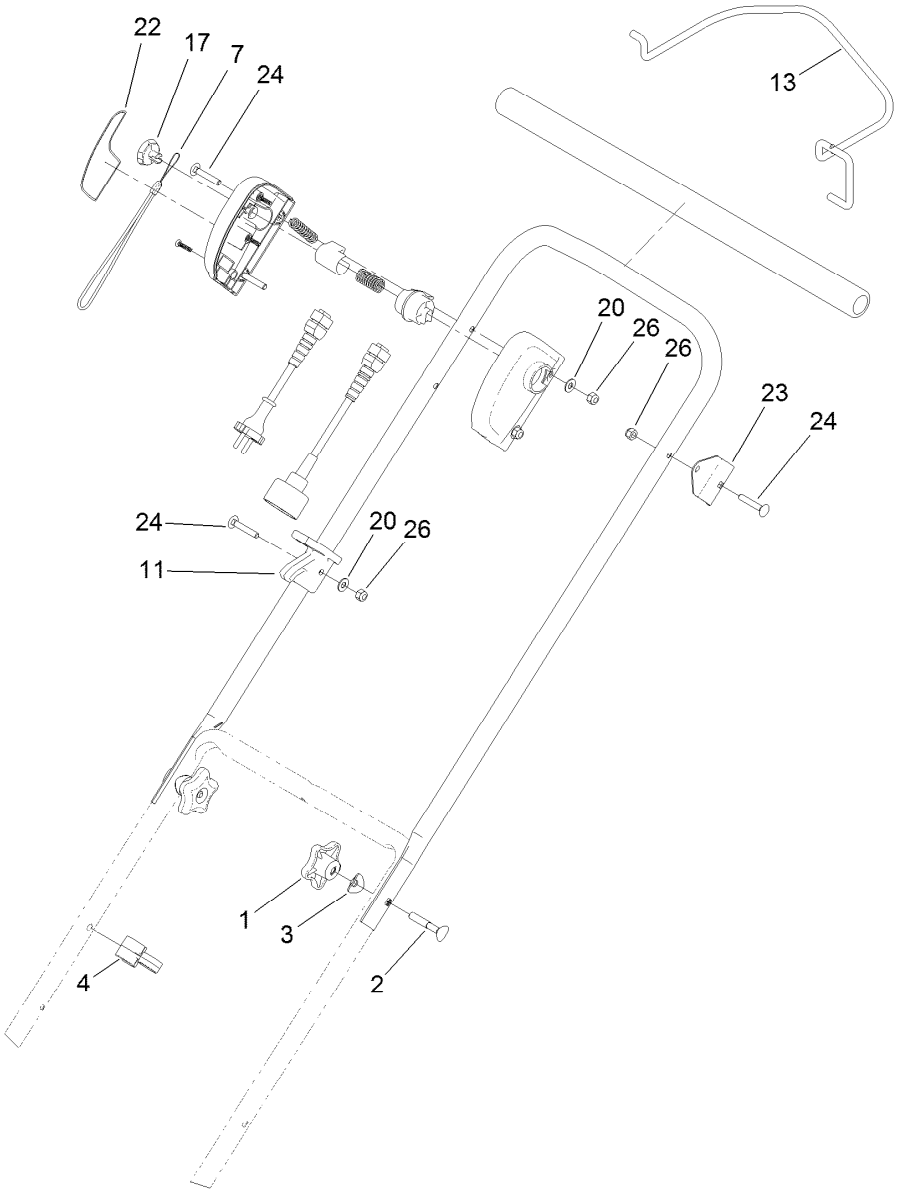

Handle Assembly

Ref.	*Part Number*	*Qty.*	*Description*
1	117-5976	2	Knob-Handle
2	137-3107	2	Screw-Handle
3	137-3009	2	Washer-Cup
4	114-7988	1	Guide-Cable
7	117-2878	1	Cord-Key
11	125-0504	1	Lock-Cord
13	119-9842-03	1	Bail
17	119-9835	1	Key-Bail
20	137-3072	3	Washer-Plain
22	119-9841	1	Decal-Operation
23	119-9848-03	1	Bracket-Bail
24	137-3011	4	Bolt-CARR
26	137-3094	4	Nut-Hex



Count on it.