Form No. 3408-203 Rev B

TORO®

Count on it.

Parts Catalog

Universal Sunshade Mount Kit

Serial Number 400000000 and After Groundsmaster® 4500 or 4700 Series Traction Unit

Model No. 136-1830

Register at www.Toro.com.
Original Instructions (EN)

CE

3408-203 B

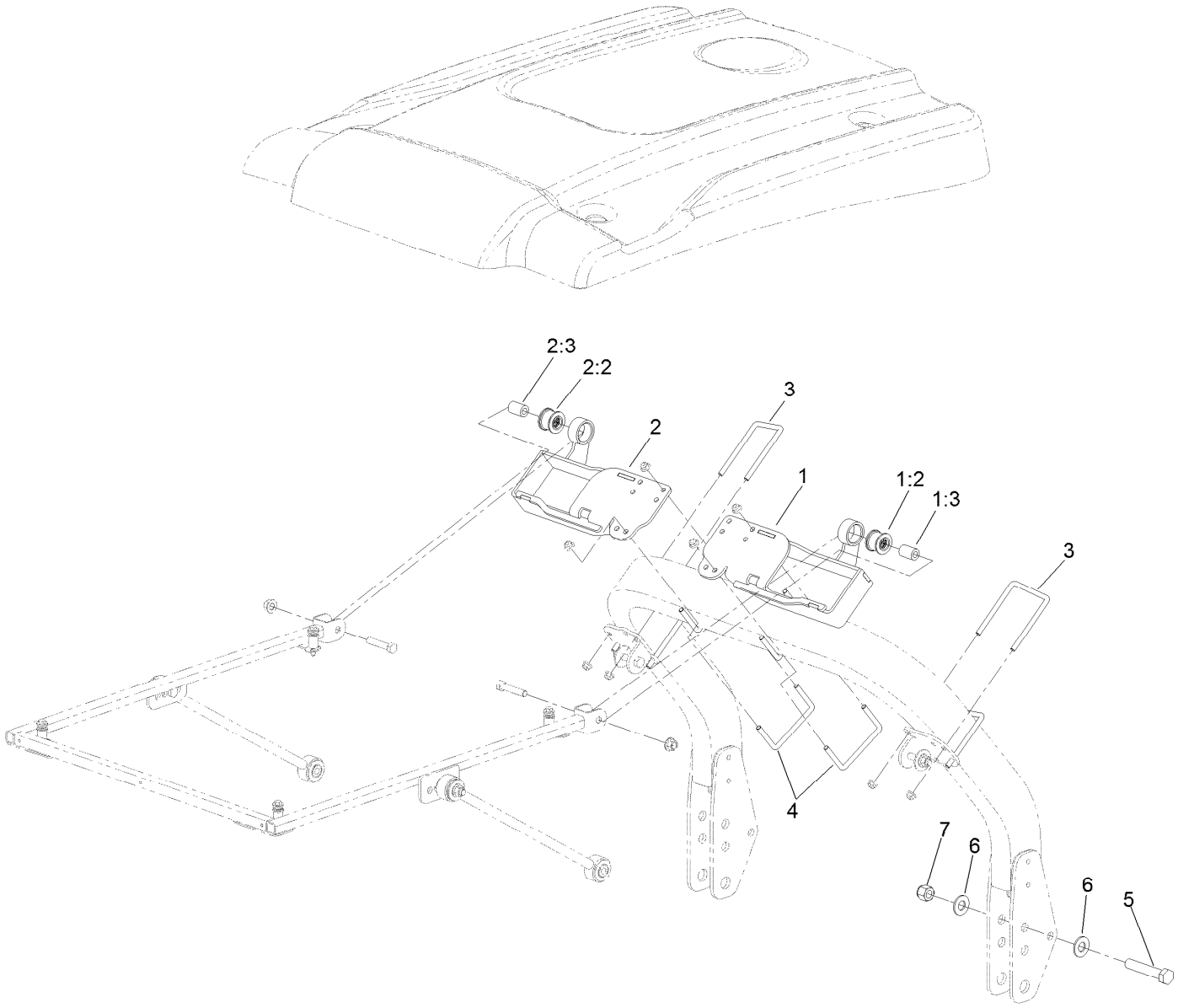

Universal Sunshade Mount No. 136-1830

Ref.	*Part Number*	*Qty.*	*Description*
1	136-1824	1	LH ROPS Mounting Bracket ASM
1:2	109-5009	1	Bushing-Suspension, Rubber
1:3	109-5010	1	Spacer
2	136-1825	1	RH ROPS Mounting Bracket ASM
2:2	109-5009	1	Bushing-Suspension, Rubber
2:3	109-5010	1	Spacer
3	136-1822	4	U-Bolt
4	136-1823	4	U-Bolt
5	AU426-1264	2	Bolt
6	107-8133	4	Washer-Flat
7	3296-51	2	Nut-Lock, NI