FORM NO. 3319–570GB

TORO®

MODEL NO. 26637 – 8900001 & UP
MODEL NO. 26639 – 8900001 & UP

OPERATOR'S MANUAL

53 CM REAR BAGGER

Mower

⚠ SAFETY INSTRUCTIONS

TRAINING

1. Read the instructions carefully. Be familiar with the controls and the proper use of the equipment.

2. Never allow children or people unfamiliar with these instructions to use the lawnmower. Local regulations may restrict the age of the operator.

3. Never mow while people, especially children, or pets are nearby.

4. Keep in mind that the operator or user is responsible for accidents or hazards occurring to other people or their property.

PREPARATION

1. While mowing, always wear substantial footwear and long trousers. Do not operate the equipment when barefoot or wearing open sandals.

2. Thoroughly inspect the area where the equipment is to be used and remove all objects which may be thrown by the machine.

3. WARNING – Petrol is highly flammable.

- Store fuel in containers specifically designed for this purpose.
- Refuel outdoors only and do not smoke while refuelling.
- Add fuel before starting the engine. Never remove the cap of the fuel tank or add petrol while the engine is running or when the engine is hot.
- If petrol is spilled, do not attempt to start the engine but move the machine away from the area of spillage and avoid creating any source of ignition until petrol vapors have dissipated.
- Replace all fuel tanks and container caps securely.

4. Replace faulty silencers.

5. Before using, always visually inspect to see that the blades, blade bolts and cutter assembly are not worn or damaged. Replace worn or damaged blades and bolts in sets to preserve balance.

6. On multi-bladed machines, take care as rotating one blade can cause other blades to rotate.

OPERATION

1. Do not operate the engine in a confined space where dangerous carbon monoxide fumes can collect.

2. Mow only in daylight or in good artificial light.

3. Avoid operating the equipment in wet grass, where feasible.

4. Always be sure of your footing on slopes.

5. Walk, never run.

6. For wheeled rotary machines, mow across the face of slopes, never up and down.

7. Exercise extreme caution when changing direction on slopes.

8. Do not mow excessively steep slopes.

9. Use extreme caution when reversing or pulling the lawnmower towards you.

10. Stop the blade(s) if the lawnmower has to be tilted for transportation when crossing surfaces other than grass, and when transporting the lawnmower to and from the area to be mowed.

11. Never operate the lawnmower with defective guards or shields, or without safety devices, for example deflectors and/or grass catchers, in place.

12. Do not change the engine governor settings or overspeed the engine.

13. Disengage all blade and drive clutches before starting the engine.

14. Start the engine or switch on the motor carefully according to instructions and with feet well away from the blade(s).

15. Do not tilt the lawnmower when starting the engine or switching on the motor, except if the lawnmower has to be tilted for starting. In this case, do not tilt it more than absolutely necessary and lift only the part which is away from the operator.

16. Do not start the engine when standing in front of the discharge chute.

17. Do not put hands or feet near or under rotating parts. Keep clear of the discharge opening at all times.

©The Toro Company–1997
All Rights Reserved

SAFETY INSTRUCTIONS

18. Never pick up or carry a lawnmower while the engine is running.

19. Stop the engine and disconnect the spark plug wire.

- before clearing blockages or unclogging chute;
- before checking, cleaning or working on the lawnmower;
- after striking a foreign objects. Inspect the lawnmower for damage and make repairs before restarting and operating the lawnmower;
- if lawnmower starts to vibrate abnormally (check immediately).

20. Stop the engine

- whenever you leave the lawnmower;
- before refuelling.

21. Reduce the throttle setting during engine shut down and, if the engine is provided with a shut-off valve, turn the fuel off at the conclusion of mowing.

22. Go slow when using a trailing seat.

MAINTENANCE AND STORAGE

1. Keep all nuts, bolts and screws tight to be sure the equipment is in safe working condition.

2. Never store the equipment with petrol in the tank inside a building where fumes may reach an open flame or spark.

3. Allow the engine to cool before storing in any enclosure.

4. To reduce the fire hazard, keep the engine, silencer, battery compartment and petrol storage area free of grass, leaves, or excessive grease.

5. Check the grass catcher frequently for wear or deterioration.

6. Replace worn or damaged parts for safety.

7. If the fuel tank has to be drained, this should be done outdoors.

SOUND PRESSURE LEVEL

This unit has an equivalent continuous A-weighted sound pressure at the operator ear of: 89 dB(A), based on measurements of identical machines per ANSI B71.5-1984 procedures.

SOUND POWER LEVEL

This unit has a sound power level of: 100 dB(A)/1 pW, based on measurements of identical machines per Directive 84/538/EEC and amendments.

VIBRATION LEVEL

This unit has a maximum hand-arm vibration level of 4.6 m/s^2, based on measurement of identical machines per ISO 5349 procedures.

SYMBOL GLOSSARY

Safety alert triangle—symbol within triangle indicates a hazard

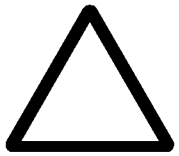

Safety alert symbol



Read operator's manual



Consult technical manual for proper service procedures



Stay a safe distance from the machine

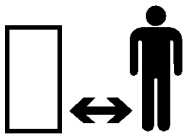

Stay a safe distance from the mower

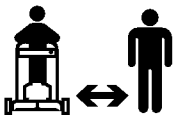

Thrown or flying objects—Whole body exposure



Thrown or flying objects—Rotary side-mounted mower. Keep deflector shield in place.

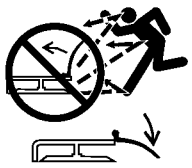

Stop engine before leaving operator position



Do not open or remove safety shields while engine is running

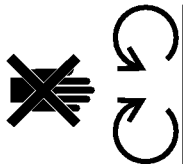

Rotating blade can cut off toes or fingers. Stay clear of mower blade as long as engine is running.



To avoid blade failure when mulching, use blade stiffener when mower is equipped with mulching plug

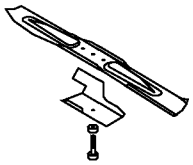

Transmission

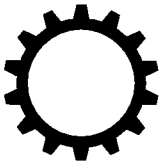

Oil



On/Run



Engage

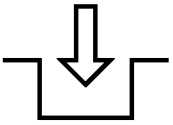

Disengage

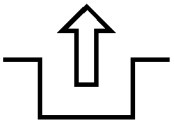

Battery charging condition

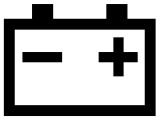

SYMBOL GLOSSARY

Hourmeter/elapsed operating hours

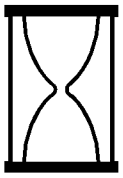

Fast



Slow



Decreasing/increasing



Grease lubrication point



Engine start

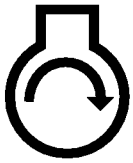

Engine stop



Choke

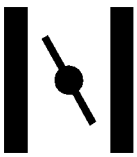

Primer (start aid)



Push primer three times

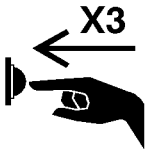

Fuel



Neutral

N

First gear

1

Second gear

2

Third gear

3

Cutting element—basic symbol



Cutting element—Height adjustment



Pull rope

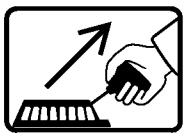

Wheel



Wheel traction

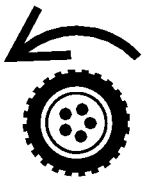

SYMBOL GLOSSARY

Properly dispose of batteries



Insert key into ignition switch

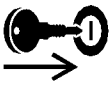

Turn key in ignition switch



Move control

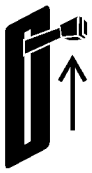

Raise control bar



Lower control bar



Lower control bar



Raise control bar



Raise/lower control bar



Raise/lower control bar

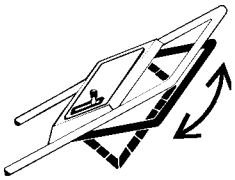

Raise control bar

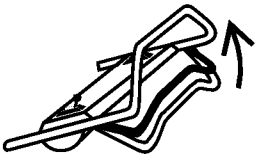

TABLE OF CONTENTS

	Page
Set-Up Instructions	6
Before Operating	8
Operating Instructions	9
Maintenance	13
Servicing Air Cleaner	13
Replacing Spark Plug	13
Draining Gasoline	13
Changing Crankcase Oil	13
Adjusting Throttle	14
Adjusting Traction Wheel Drive	14
Adjusting The Brake Cable	15
Inspecting/Removing/Sharpening Blade	15
Lubrication	16
Charging Battery	16
Replacing Fuse	17
Cleaning Mower Housing	17
Preparing Mower For Storage	17
Optional Equipment	18
Product Identification	18
Toro Service Support	18
The Toro Starting Guarantee	19
Guaranteed To Start Maintenance Record	20

SET-UP INSTRUCTIONS

INSTALL HANDLE

1. INSTALLING HANDLE—Loosen knobs on mounting brackets (Fig. 1).

2. Position mounting brackets in a vertical position so that holes face up.

3. Slide handle ends into holes in mounting brackets until handle ends are completely seated in brackets (Fig. 1). Make sure throttle cable, electric start cable (electric start model) and traction cable rest on top of left mounting bracket (Fig. 2).

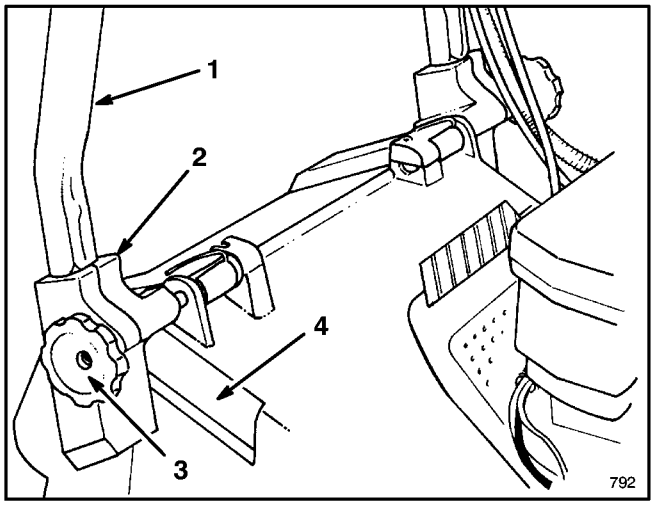

Figure 1

1. **Handle**
2. **Mounting bracket**
3. **Knobs**
4. **Housing pocket**

4. Rotate handle and brackets rearward until brackets fit securely into housing pockets (Fig. 2).

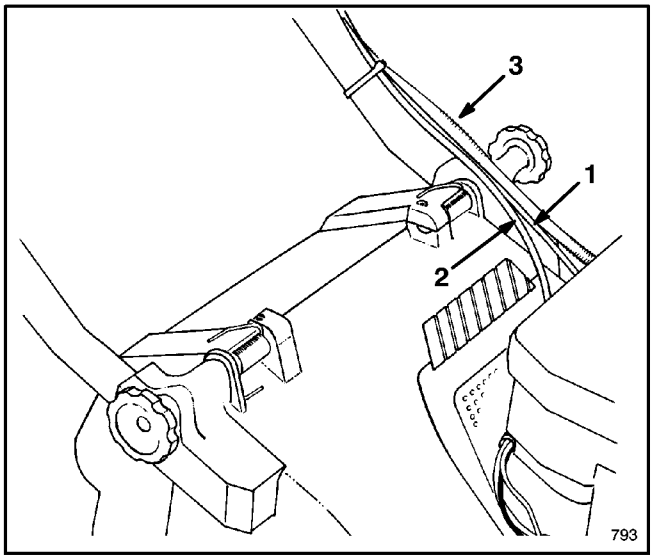

Figure 2

1. **Throttle cable**
2. **Traction cable**
- *** 3. Electric start cable**

*** Electric start model**

5. Tighten knobs until edges of slots on top of mounting brackets touch.

6. Use cable tie to secure cable(s) to lower side of left hand tube (Fig. 3). Cable tie should be positioned 25 mm (1") from bend in handle. See Figure 3 for correct cable placement.

Note: Make sure cable(s) do not interfere with the raising or lowering of discharge door.

SET-UP INSTRUCTIONS

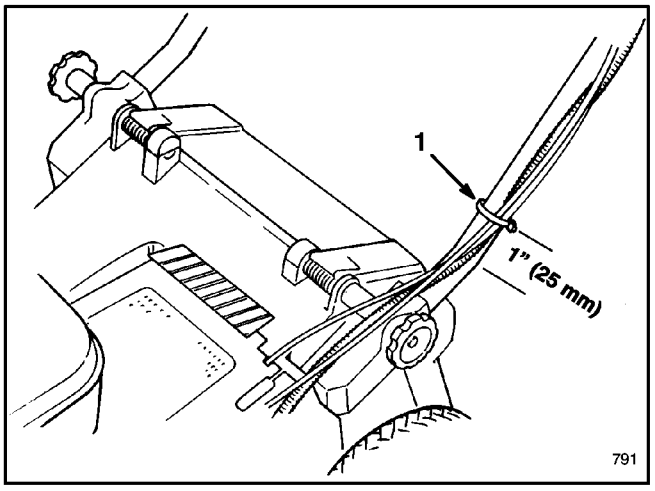

Figure 3

1. Cable tie

7. Cut excess length from end of cable tie on lower left handle.

8. Secure control lever to control bar with a capscrew and locknut (Fig. 4).

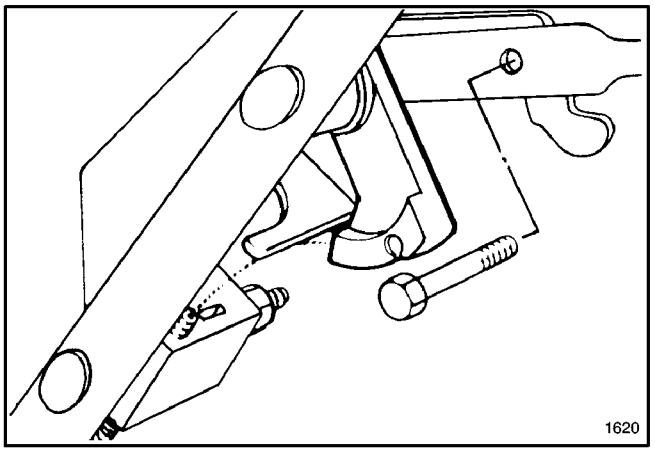

Figure 4

INSTALL STARTER ROPE

1. Pull the starter rope through the rope guide on the handle (Fig. 5). To make the rope easier to loop, squeeze the control bar on the handle to release the blade brake.

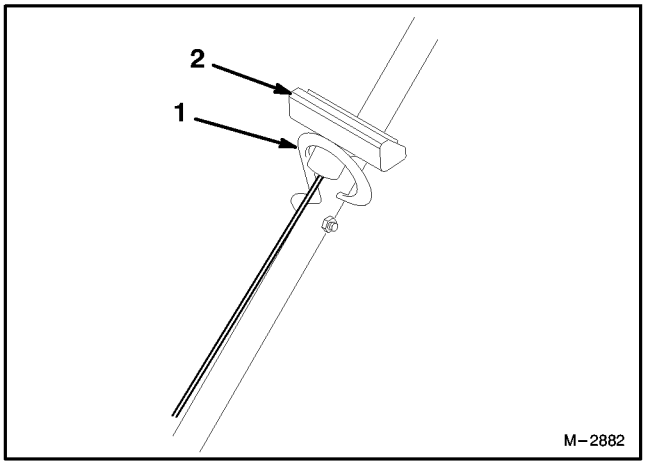

Figure 5

1. Rope guide
2. Starter rope

INSTALL GRASS BAG

1. Raise discharge door, slide bag ramp attached to bag into discharge opening, and hook bag frame onto rounded portion of mounting brackets (Fig. 6).

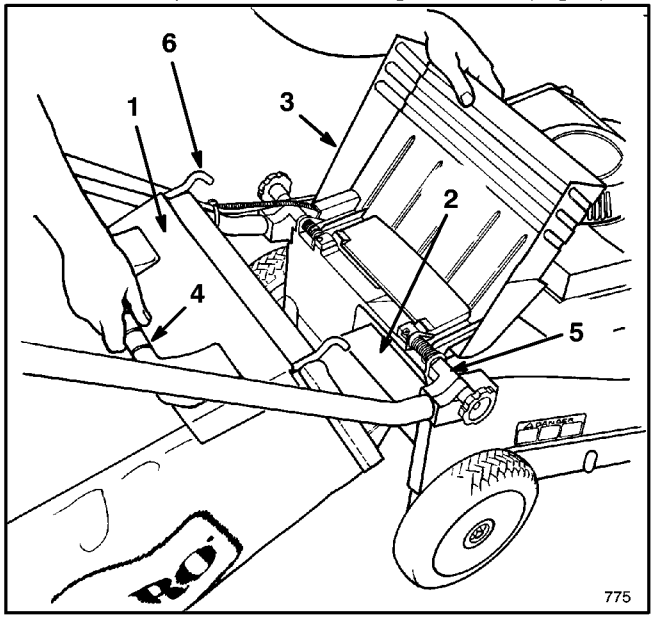

Figure 6

1. Bag door
2. Bag ramp
3. Discharge door
4. Bag handle
5. Mounting bracket
6. Bag frame hook

Note: Make sure grass bag door is **fully** closed against grass bag before installing bag on mower.

2. Allow discharge door to rest on top of bag (Fig. 7).

SET-UP INSTRUCTIONS

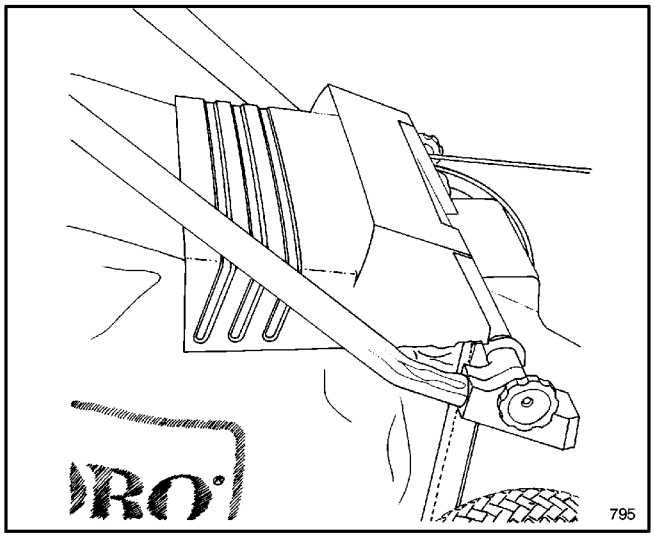

Figure 7

INSTALL BATTERY (electric start model)

1. Refer to Charging Battery, page 16.
2. Connect wire harness to battery pigtail (Fig. 8).

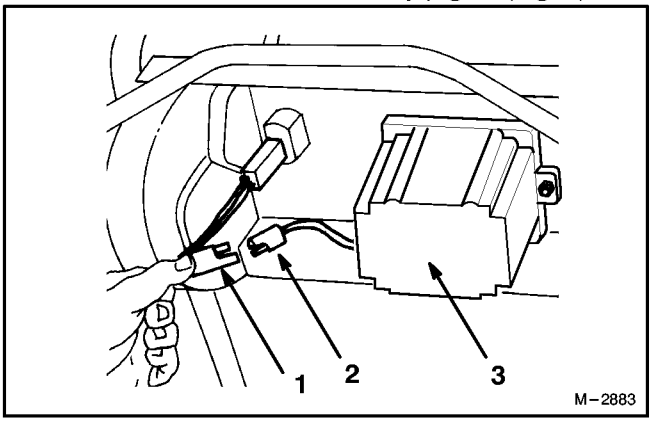

Figure 8

1. Wire harness 2. Battery pigtail 3. Battery case

BEFORE OPERATING

FILL CRANKCASE WITH OIL

Fill crankcase with SAE 30 or 10W30 oil until oil level reaches FULL mark on dipstick as shown in Figure 9. The maximum crankcase capacity is 22 ounces (0.65 liters) of oil. Use any high quality detergent oil having the American Petroleum Institute (API) "service classification" — SF, SG, SH or SJ.

Before each use, ensure oil level is between ADD and FULL marks (Fig. 9). Add oil if level is low.

1. Position mower on level surface and clean around oil dipstick.
2. Remove dipstick by rotating cap counterclockwise 1/4 turn.

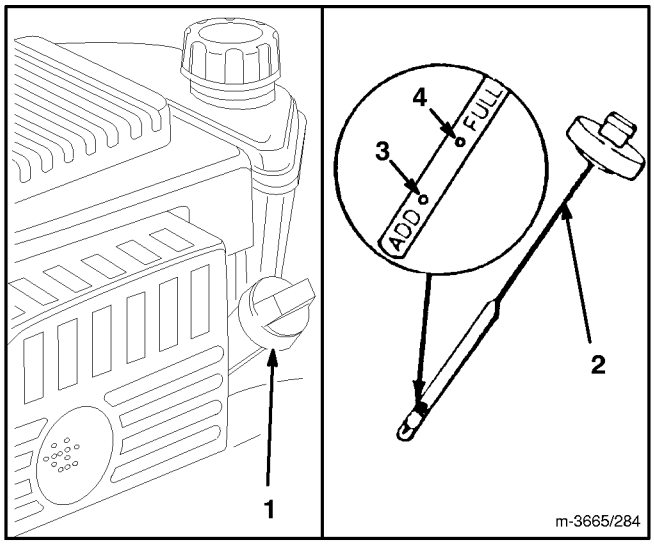

Figure 9

1. Oil fill tube 2. Dipstick 3. ADD mark 4. FULL mark

3. Wipe dipstick and insert it into filler neck. Rotate cap 1/4 turn. Then remove dipstick and check level of oil (Fig. 9). If level is low, add only enough oil to raise level to FULL mark on dipstick. **DO NOT FILL ABOVE FULL MARK BECAUSE ENGINE COULD BE DAMAGED WHEN STARTED. POUR OIL SLOWLY.**

Note: Check oil level each time mower is used or after every 5 hours of mower operation. Initially, change oil after the first 5 hours of operation; thereafter, change oil after every 50 hours of operation. More frequent oil changes are required in dusty or dirty conditions.

4. Insert dipstick into filler neck and rotate cap clockwise 1/4 turn to lock it in place.

FILL FUEL TANK WITH GASOLINE

WARNING

DANGER: Gasoline is extremely flammable and explosive under certain conditions. DO NOT SMOKE when handling fuel and keep fuel far away from open flames and sparks. Never buy more than a 30 day supply of gasoline. Store it in an approved container. Keep gasoline out of reach of children.

Refuel outdoors and only when engine is cold. Do not fill tank full. Fill tank to within 6 to 13 mm (1/4" to 1/2") from top of tank, not into filler neck. This space is for expansion of fuel. Use funnel or spout to prevent spilling. Wipe up any spilled gas.

BEFORE OPERATING

Note: The Toro Company strongly recommends the use of fresh, clean, **UNLEADED** regular grade gasoline in Toro gasoline powered products. Unleaded gasoline burns cleaner, extends engine life, and promotes good starting by reducing the build−up of combustion chamber deposits. Leaded gasoline can be used if unleaded is not available.

1. Clean around fuel tank cap (Fig. 10) and remove cap from tank. Do not fill tank full. Using unleaded gasoline, fill fuel tank to within 6 to 13 mm (1/4 to 1/2 inch) from top of tank, not into the filler neck.

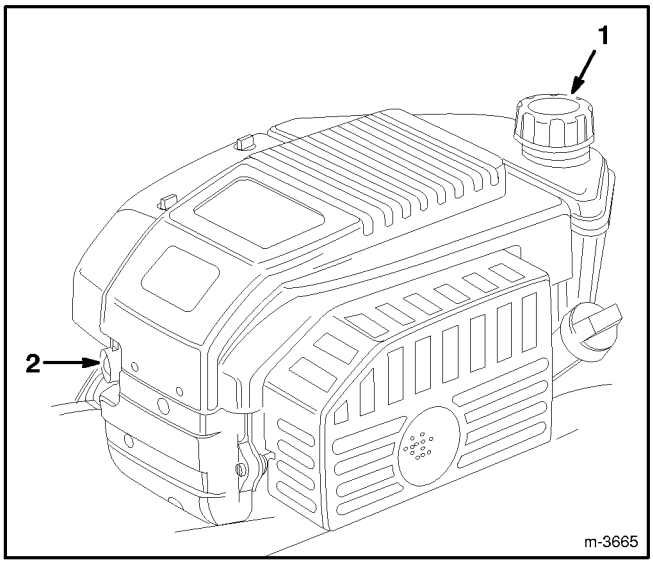

Figure 10

1. **Fuel tank cap** 2. **Primer**

2. Install fuel tank cap and wipe up any spilled gasoline.

Toro also recommends that Toro Stabilizer/Conditioner be used regularly in all Toro gasoline powered products during operation and storage seasons. Toro Stabilizer/Conditioner cleans the engine during operation and prevents gum-like varnish deposits from forming in the engine during periods of storage.

IMPORTANT: Do not mix oil with the gasoline. Never use methanol, gasoline containing methanol, gasohol containing more than 10% ethanol, premium gasoline or white gas because engine fuel system damage could result.

Do not use fuel additives other than those manufactured for fuel stabilization during storage such as Toro's Stabilizer/Conditioner or a similar product. Toro's Stabilizer/Conditioner is a petroleum distillate based conditioner/stabilizer. Toro does not recommend stabilizers with an alcohol base such as ethanol, methanol or isopropyl. Additives should not be used to try to enhance the power or performance of machine.

OPERATING INSTRUCTIONS

OPERATING TIPS

1. CHECK OIL LEVEL—Maintain oil level between ADD and FULL range as shown on dipstick (Fig. 9).

2. BEFORE EACH MOWING—Ensure self-propelled drive and control bar function properly. When control bar is released, engine, blade and self-propelled drive are designed to stop.

3. CUTTING AND BAGGING—Best results are achieved when engine is running at maximum speed and only about 1/3 of the grass blade is cut. If long grass must be cut, use highest height−of−cut setting for first mowing. Then recut the grass at a more normal setting. If too long of grass is cut, mower may plug and cause engine to stall.

When cutting in dry, dusty conditions move the throttle to a slower speed to reduce the amount of dust generated by mower.

4. SHARP BLADE—Begin each cutting season with a sharp blade. Periodically file down nicks.

STARTING, STOPPING, AND SELF−PROPELLING

CONTROLS—Key switch (electric start model), throttle, ground speed control, self-propelled control bar and fingertip starter are on upper handle (Fig. 11).

OPERATING INSTRUCTIONS

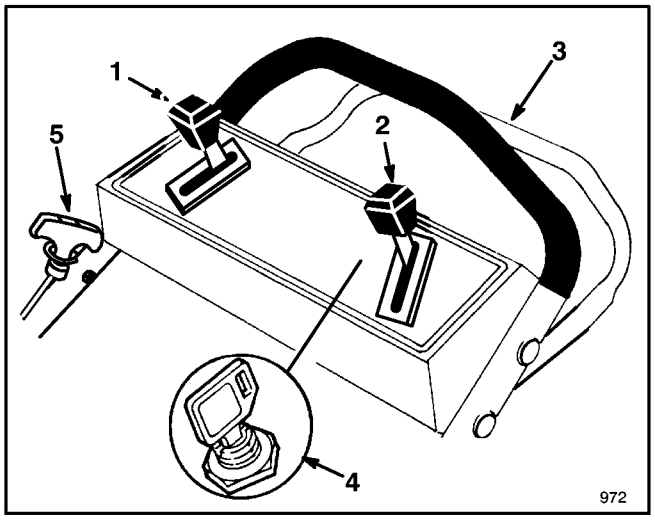

Figure 11

1. **Ground speed control**
2. **Throttle control**
3. **Self-propelled control bar**
4. *** Key switch**
5. **Recoil starter**

*** electric start model**

1. Push spark plug wire onto spark plug (Fig. 12).

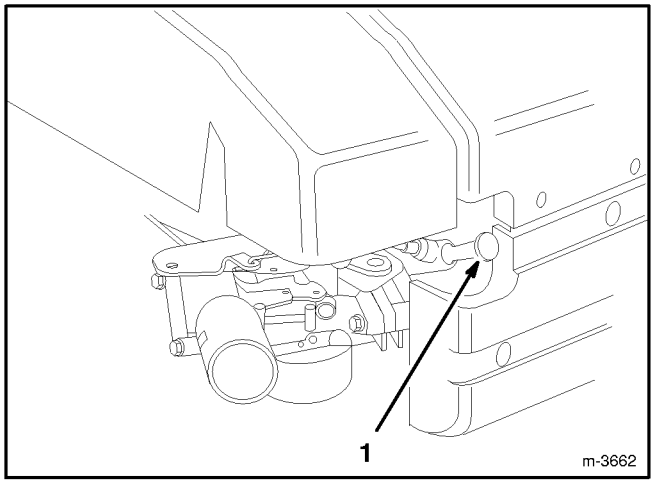

Figure 12

1. **Spark plug wire**

2. Move ground speed control to **N** (NEUTRAL) position.

3. Move throttle control to (FAST) position.

4. Push primer three (3) times (Fig. 10). **Wait about two (2) seconds between each push.**

Note: Do not use primer to restart a warm engine after a short shutdown. However, cool weather may require priming to be repeated.

5. KEY-LECTRIC STARTING—Squeeze control bar against handle. Turn key to (START) and release when engine begins running. When engine starts, regulate engine speed as desired. If the battery's charge is too weak to start the engine, the engine can be started with the recoil starter (Fig. 11). Allow the engine to warm-up. During warm-up, the equipment can be operated.

6. MANUAL STARTING—Squeeze control bar against handle. Pull recoil starter out until positive engagement results; then pull vigorously to start the engine. When engine starts, regulate engine speed as desired.

Note: If battery is discharged, engine can be started with the recoil starter.

7. TRACTION OPERATION—Move ground speed control to desired setting and squeeze control bar against handle to drive. **Ground speed can be varied by increasing or decreasing distance between control bar and handle (Fig. 13).** Lower control bar to slow mower when making a turn, maneuvering, or if mower is moving too fast for you. If you lower control bar too far, the mower will stop self-propelling. Squeeze control bar closer to handle to increase ground speed. When control bar is tight against handle, mower will self-propel at maximum ground speed. The control bar does not have to be squeezed tight against the handle to self-propel. Move ground speed control to **N** when using the mower for trimming and whenever leaving mower.

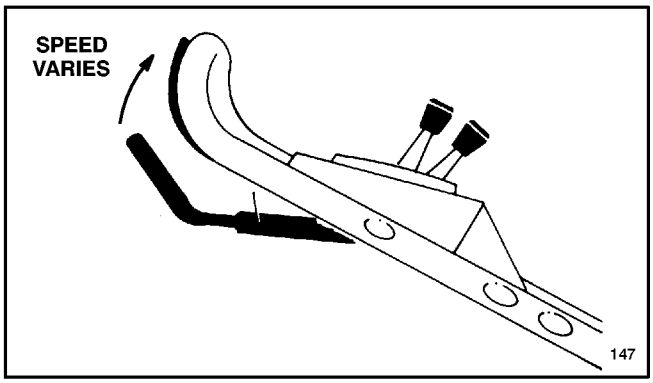

Figure 13

Note: The drive wheels are equipped with freewheeling clutches which enable the mower to be pulled rearward easier when the wheel drive is disengaged. To disengage the clutches, mower must be pushed forward at least 2.5 cm (1") after wheel drive operation has stopped.

8. STOPPING—To stop engine, release the control bar. Remove key from switch on electric start model. Pull wire off spark plug if mower will be unattended or not used.

OPERATING INSTRUCTIONS

USING GRASS BAG

1. Stop engine and wait for all parts to stop.

2. INSTALLING BAG—Raise discharge door, slide bag ramp attached to bag into discharge opening, and hook bag frame onto mounting bracket (Fig. 14). Allow discharge door to rest on top of bag (Fig. 15).

Note: Make sure grass bag door is **fully** closed against grass bag before installing bag on mower.

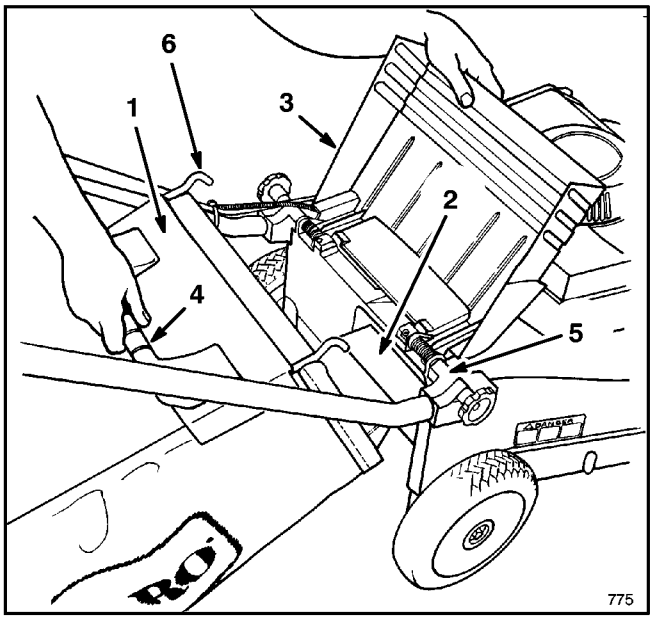

Figure 14

1. Bag door
2. Bag ramp
3. Discharge door
4. Bag handle
5. Mounting bracket
6. Bag frame hook

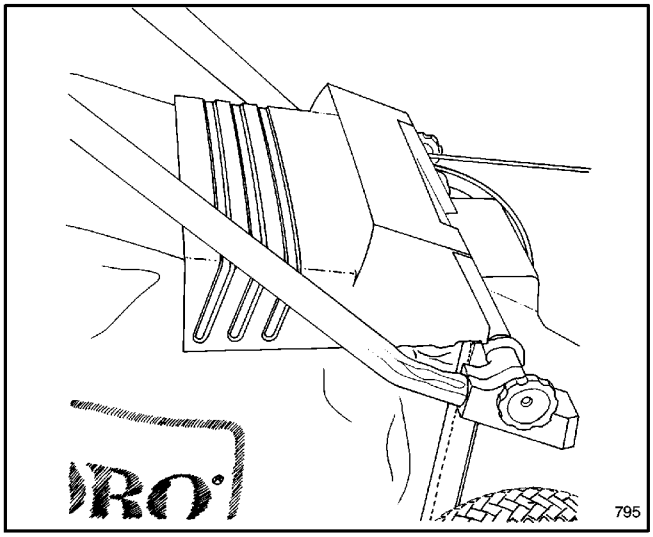

Figure 15

3. REMOVING BAG—**Stop engine and wait for all moving parts to stop.** For protection, always keep hands and feet away from mower housing while engine is running. Raise discharge door. While holding discharge door up, grasp handle on grass bag and lift bag off mower. Allow discharge door to close.

Note: When removing the grass bag, the bag ramp scoops out any clippings that may be plugging the discharge opening. If the discharge opening remains plugged, pull wire off spark plug and clear all clippings from the mower.

4. EMPTYING BAG—Grasp bag frame handle and rear of grass bag. Tip bag door up and gradually tip bag forward to empty clippings.

⚠ DANGER

- **Grass clippings and other objects can be thrown from an open discharge tunnel.**
- **Objects thrown with enough force could cause serious personal injury or death to operator or bystander.**
- **Never open door on discharge tunnel when engine is running unless the grass bag is securely installed.**

⚠ DANGER

- **A worn grass bag could allow small stones and other similar debris to be thrown in operator's or bystander's direction.**
- **Thrown objects can cause serious personal injury or death to operator or bystanders.**
- **Check the grass bag frequently. If it is damaged, install a new genuine TORO replacement bag.**

OPERATING INSTRUCTIONS

ADJUSTING HEIGHT-OF-CUT

Three numbers cast into the housing represent the height-of-cut settings. The diamond between each number represents a 1/2" increment.

1. Stop the engine and pull wire off spark plug. For electric start model, remove key from switch.

⚠ DANGER

- **Adjusting height-of-cut levers could bring hands into contact with moving blade.**
- **Contact with blade could cause serious personal injury.**
- **Do not adjust the height-of-cut settings when engine is running and blade is rotating.**
- **Do not put fingers under housing to lift mower when adjusting height-of-cut levers.**

2. For easier adjustment, lift housing up so wheel is off ground. **Do not place hands under deck to lift housing.** Squeeze adjusting lever toward wheel and move to desired setting (Fig. 16). Ensure pin on adjusting lever engages notch in housing. Adjust all wheels to the same setting.

Note: Front wheels can be adjusted to 1/2". Move adjusting lever past "1" and release pin into notch in housing.

3. In conditions when maximum power is required or when cutting in spongy thatch that causes rear wheels to sink in turf, raise rear wheel setting one increment higher. Make sure wheel settings are returned to equal settings, when cutting in normal conditions, to achieve the best quality of cut.

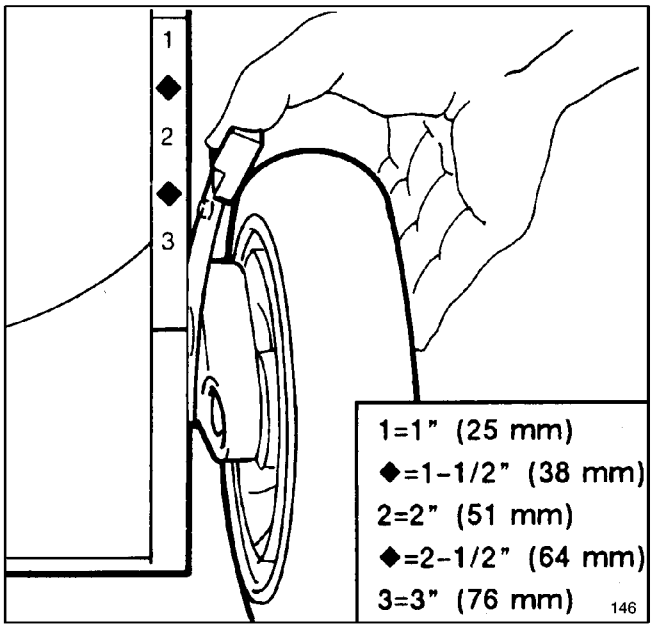

Figure 16

MAINTENANCE

CAUTION

- **When wire is on spark plug, someone could accidentally start the engine.**
- **Accidental starting of engine could cause serious injury to operator or bystanders.**
- **Pull wire off spark plug before performing any maintenance or adjustments.**

SERVICING AIR CLEANER

Normally, clean air cleaner pre-cleaner after every 25 operating hours or every season. Clean the paper cartridge after every 100 hours or every season. More frequent cleaning is required when mower is operated in dusty or dirty conditions. Replace air cleaner parts, if very dirty.

1. Stop engine and pull wire off spark plug (Fig. 12). For electric start model, remove key from switch.

2. Remove two (2) knobs securing air cleaner cover to engine (Fig. 17).

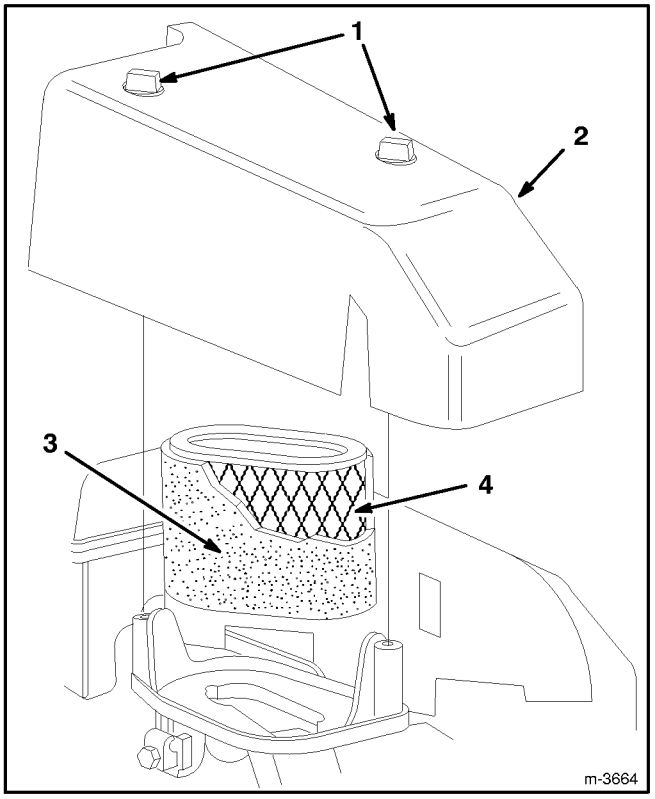

Figure 17

1. Knob	**3. Foam pre-cleaner**
2 Cover	**4 Paper cartridge**

3. Lift cover off. Clean cover thoroughly.

4. Carefully remove pre-cleaner. If pre-cleaner is dirty, carefully wash it in a solution of liquid soap and warm water. Rinse in clear water. Allow to dry thoroughly before using.

5. If paper cartridge is dirty, clean the paper filter by tapping it **gently** on a flat surface. If very dirty, replace cartridge.

IMPORTANT: Do not oil pre−cleaner or paper cartridge. Do not use pressurized air to clean paper cartridge.

6. Reinstall pre-cleaner over paper cartridge. Reinstall air cleaner cover and tighten securely in place with two (2) knobs.

IMPORTANT: Do not operate engine without air cleaner element otherwise extreme engine wear and damage will likely result.

REPLACING SPARK PLUG

Use a CHAMPION RC12YC spark plug or equivalent. Correct air gap is 0.5 mm (0.020”). Remove plug after every 25 operating hours and check its condition.

1. Stop engine and wait for it to cool. Pull wire off spark plug (Fig. 12). For electric start model, remove key from switch.

2. Clean around spark plug and remove plug from cylinder head.

IMPORTANT: Replace a cracked, fouled, or dirty spark plug. Do not sand blast, scrape, or clean electrodes because engine damage could result from grit entering cylinder.

3. Set air gap at 0.5 mm (0.020”) (Fig. 18). Install correctly gapped spark plug and gasket seal. Tighten plug firmly to 19 N·m (14 ft−lb).

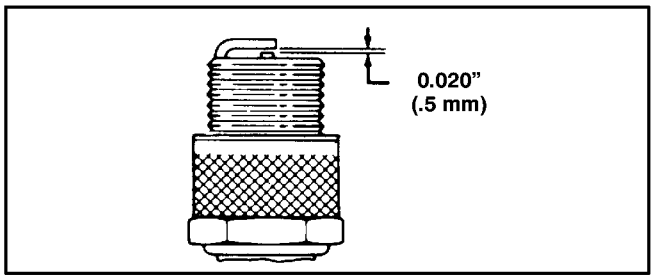

Figure 18

DRAINING GASOLINE

1. Stop engine and wait for engine to cool. Pull wire off spark plug (Fig. 12). For electric start model, remove key from switch.

Note: Drain gasoline from a cold engine only.

2. Remove cap from fuel tank and use pump−type syphon to drain fuel into clean gas can.

Note: This is the only procedure recommended for draining fuel.

CHANGING CRANKCASE OIL

Change oil after the first 5 operating hours and after every 50 hours thereafter. Since warm oil drains better and carries more contaminants than cold, run engine for several minutes before draining oil.

1. Drain gasoline. Refer to Draining Gasoline section.
2. Run engine until it dies. Try starting engine once more to make sure gas is out of carburetor.
3. Pull wire off spark plug (Fig. 12). Remove key from switch on electric start model.
4. Lift discharge door and remove grass bag. Drain gasoline from fuel tank: refer to Draining Gasoline, page 13.
5. Remove dipstick from oil fill tube and place a drain pan next to left side of mower.
6. Tip mower on its left side, allowing oil to drain into drain pan (Fig. 19).
7. When oil is drained, return mower to upright position and add fresh oil to engine. Refer to Fill Crankcase With Oil, page 8.
8. Reconnect spark plug wire.

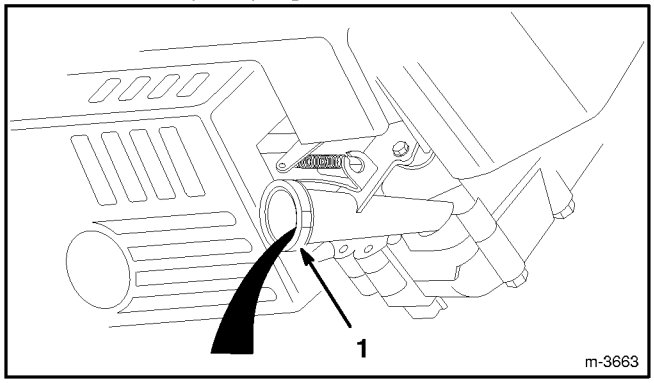

Figure 19

1. Oil fill tube

ADJUSTING THROTTLE

Throttle control adjustment may be required if engine does not start or stop. Whenever a new throttle control cable is installed, the throttle must be adjusted.

1. Stop engine and pull wire off spark plug (Fig. 12). For electric start model, remove key from switch.
2. Loosen cable clamp screw until throttle cable slides (Fig. 20).
3. Move governor control lever, throttle cable and casing in direction of arrow as far as possible (Fig. 20).
4. Move throttle control to (FAST position).
5. Tighten cable clamp screw to lock adjustment in place.

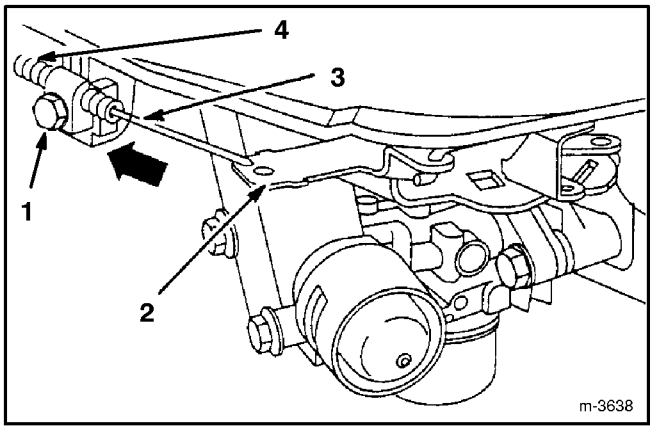

Figure 20

1. Cable clamp screw
2. Governor control lever
3. Throttle cable
4. Casing

ADJUSTING WHEEL DRIVE

If mower does not self−propel or has a tendency to creep forward when drive is not engaged, an adjustment to the wheel traction control cable is necessary.

1. Stop engine and pull wire off spark plug (Fig. 12).
2. Loosen nut on support block (Fig. 21).

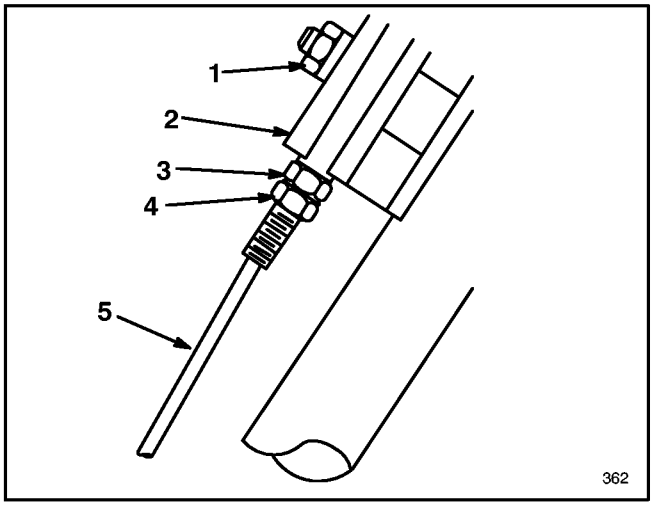

Figure 21

1. Nut
2. Support block
3. Top jam nut
4. Bottom jam nut
5. Wheel traction cable

3. Loosen bottom jam nut on wheel traction cable (Fig. 21).

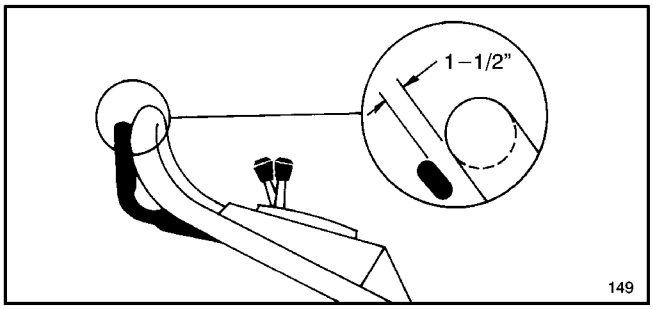

Figure 22

4. Lift control bar until some resistance is felt. Control bar should be 1-1/2" from handle when properly adjusted (Fig. 22).

5. Move the top jam nut up to increase the clearance between the control bar and handle. Move top jam nut down to decrease the clearance between the control bar and the handle.

6. Repeat steps 4 and 5 until properly adjusted.

7. Tighten bottom jam nut to lock the adjustment.

8. Top jam nut should be against support block when adjustment is complete (Fig. 21).

9. Tighten nut on support block.

ADJUSTING THE BRAKE CABLE (Fig. 23)

Whenever a new blade brake cable assembly is installed, an adjustment is required.

1. Stop engine. Pull wire off spark plug (Fig. 12). Remove key from switch on electric start model.

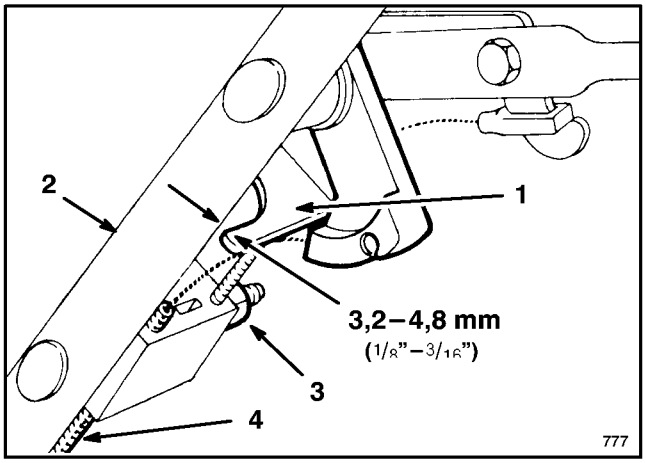

Figure 23

1. **Brake lever**
2. **Handle**
3. **Nut**
4. **Cable conduit**

2. CHECK ADJUSTMENT—Move control bar toward handle until slack in wire is removed. The gap between brake lever and handle must be 3,2 mm–4,8 mm (1/8"–3/16"). See step 3 for adjustment.

3. CHECK CABLE CONDUIT—Loosen nut on cable bracket. Insert 3,2 mm–4,8 mm (1/8"–3/16") object between brake lever and handle. Pull down on cable conduit until all slack is removed from wire. Then tighten nut.

INSPECTING/REMOVING/SHARPENING BLADE

1. Stop engine and pull wire off spark plug (Fig. 12). For electric start model, remove key from switch.

2. Drain gasoline from fuel tank; refer to Draining Gasoline, page 13.

3. Tip mower on its left side. Avoid rotating blade as starting problems may result.

4. INSPECTING BLADE—Carefully examine blade for sharpness and wear, especially where flat and curved parts meet (Fig. 24A). Since sand and abrasive material can wear away the metal that connects the flat and curved parts of the blade, check blade before using the mower. If a slot or wear is noticed, (Fig. 24B & C), replace blade with a new TORO blade. Refer to step 5.

Note: For optimum performance, install a new TORO blade before cutting season begins. During the year, file down small nicks to maintain the cutting edge.

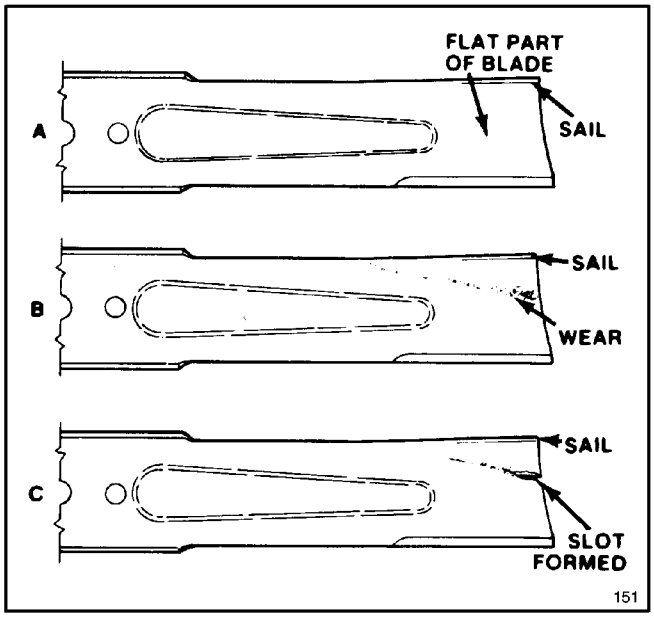

Figure 24

DANGER

- **A worn or damaged blade could break and a piece of blade could be thrown into operator's or bystander's area.**
- **A thrown piece of blade could cause serious personal injury or death to operator or bystanders.**
- **Inspect blade periodically for wear or damage.**
- **Replace a worn or damaged blade.**

5. REMOVING BLADE—Grasp end of blade using a rag or thickly padded glove. Remove blade bolt, lockwasher and blade (Fig. 25).

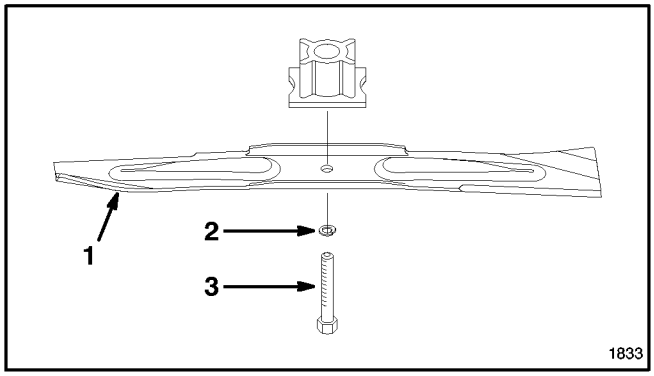

Figure 25

1. Blade 2. Lockwasher 3. Blade bolt

6. SHARPENING BLADE—Using a file, sharpen top side of blade and maintain original cutting angle (Fig. 26). The blade remains balanced if the same amount of material is removed from both cutting edges.

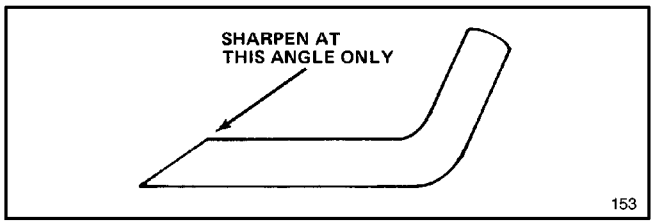

Figure 26

IMPORTANT: Check balance of blade by putting it on a blade balancer. An inexpensive balancer can be purchased at a hardware store. A balanced blade stays in a horizontal position and an unbalanced blade settles to the heavy side. If blade is not balanced, file more metal off cutting edge on heavy end of blade.

7. Install sharp, balanced blade, lockwasher and blade bolt. Sail part of blade must point toward top of mower housing to assure correct installation. Tighten the blade bolt to 50 ft−lb (68 N·m).

LUBRICATION

After every 25 operating hours or when season ends, front and rear wheels must be lubricated.

1. Apply two or three drops of light oil on inside and outside of all wheel bolts. Spin wheels to distribute oil into bushings. Wipe up excess oil.

2. Move rear wheel height−of−cut levers to "2" setting. Wipe grease fittings with clean rag (Fig. 27). Install grease gun onto fitting and gently apply two or three pumps of #2 Multi−Purpose Lithium Base Grease.

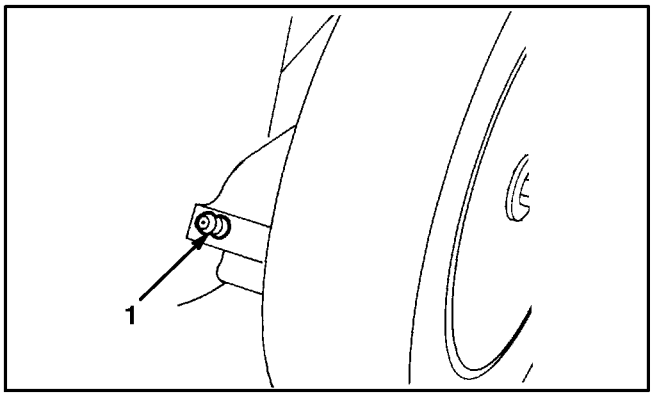

Figure 27

1. Grease fitting

CHARGING BATTERY (electric start model)

Although a new battery is not fully charged, a partial charge of 4 hours provides enough energy for several starts. However, a new battery must be charged for 72 continuous hours to ensure full charge. Also charge battery for 72 hours when mower is stored and in the spring. During normal operation, engine alternator will keep battery charged.

1. Stop engine and disconnect wire harness from battery pigtail (Fig. 28).

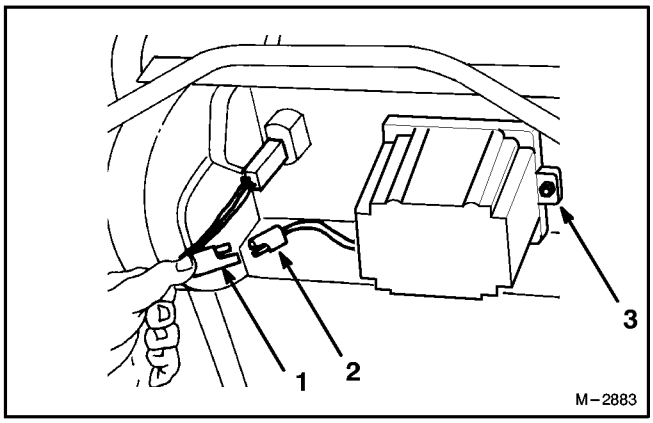

Figure 28

1. Wire harness 2. Battery pigtail 3. Carriage bolt, washer, and locknut

2. If desired, battery can be removed by removing (2) carriage bolts, (2) washers, and (2) locknuts. However, removal is not required if mower can be positioned near an electrical outlet.

3. Connect TORO electro charger to battery and plug into power outlet. After charging battery for specified time, unplug charger and disconnect from battery.

4. Connect wiring harness to battery pigtail.

IMPORTANT: Only the TORO electro charger is recommended because other chargers could damage the battery. Always use charger indoors and charge battery at room temperature (22°C or +70°F) whenever possible. Do not charge battery longer than 72 hours because damage could result.

MAINTENANCE

REPLACING FUSE

The electrical system charging circuit is protected by a fuse. If the battery does not stay charged, the fuse may be blown. Use a 5 amp AGC-5 fuse.

1. Push the two fuse holder sections together. Rotate fuse holder cap to open fuse holder (Fig. 29).

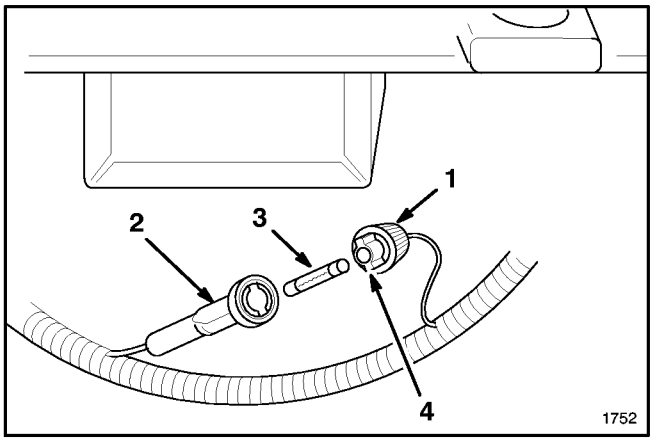

Figure 29

1. **Fuse holder cap**
2. **Fuse holder bottom**
3. **Fuse**
4. **Tab (2)**

2. Remove fuse and discard.

3. Install new fuse.

4. Line up tabs on fuse holder cap with fuse holder bottom and push sections together. Rotate cap to close fuse holder.

CLEANING MOWER HOUSING

To assure best performance, keep underside of mower housing and inside of discharge area clean.

1. Stop engine and pull wire off spark plug (Fig. 12). For electric start model, remove key from switch.

2. Drain gasoline from fuel tank: refer to Draining Gasoline, page 13.

3. Tip mower on its left side (Fig. 30). Avoid rotating blade because starting problems may result.

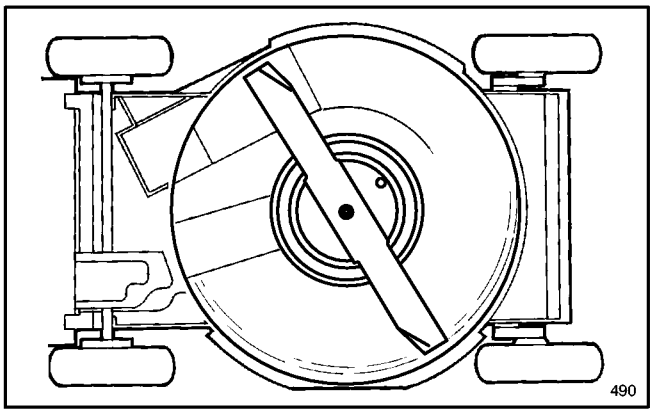

Figure 30

4. Remove dirt and grass clippings that stick to housing by spraying it with a garden hose. Scrape out remaining debris with hardwood scraper. Avoid burrs and sharp edges.

5. Clean discharge door and hinges of grass or debris that may impair operation of door.

PREPARING MOWER FOR STORAGE

1. For long term storage, it is recommended that gasoline be drained from fuel tank or use a fuel additive before storing. To drain gasoline, refer to Draining Gasoline, page 13. After fuel is drained, start engine and let it idle until all fuel is consumed and engine stops. If gasoline is not drained, gum−like varnish deposits will form and cause poor engine operation or even starting problems.

Fuel can be left in gas tank only if a fuel additive, such as Toro's Stabilizer/Conditioner, is added to gasoline and run through engine before storing. Toro's Stabilizer/Conditioner is a petroleum distillate based conditioner/stabilizer. Toro does not recommend stabilizers with an alcohol base, such as ethanol, methanol or isopropyl. Use fuel additive in recommended quantities as specified on container.

Under normal conditions, fuel additives remain effective in fuel for 6-8 months.

2. Drain oil: refer to Changing Crankcase Oil, page 13. After oil is drained, do not fill crankcase with oil until the following steps (3−10) are completed.

3. Remove spark plug and pour 30 ml (2 tablespoons) of SAE 30 oil into hole in cylinder. Pull starter rope slowly to coat inside of cylinder. Install spark plug and tighten to 15 ft−lb (20 N·m). **DO NOT INSTALL WIRE ON SPARK PLUG.**

4. Clean mower housing; refer to Cleaning Mower Housing, page 17.

5. Check condition of blade; refer to Inspecting/Removing/Sharpening Blade, page 15.

6. Tighten all nuts, bolts, and screws.

7. Clean dirt, chaff, grass clippings, and grime from external parts of the engine, shrouding, and top of mower housing.

8. Clean air cleaner; refer to Servicing Air Cleaner, page 13.

9. Lubricate the wheels; refer to Lubrication, page 16.

10. Touch up all rusted or chipped paint surfaces. Toro Re−Kote paint is available from an Authorized TORO Service Dealer.

11. Fill crankcase with oil; refer to Fill Crankcase With Oil, page 8.

12. Charge battery for 72 hours; refer to Charging Battery, page 16.

13. Store mower in a clean, dry place. Cover mower to keep it clean and protected.

OPTIONAL EQUIPMENT

For special conditions the following accessories may be purchased at your local authorized TORO Service Dealer.

1. Dethatcher Kit, Model No. 59131—Installs in minutes. Front mounted for easy maneuverability. Spring tines loosen thatch for clean vacuuming into grass bag (Fig. 31) and convenient disposal.

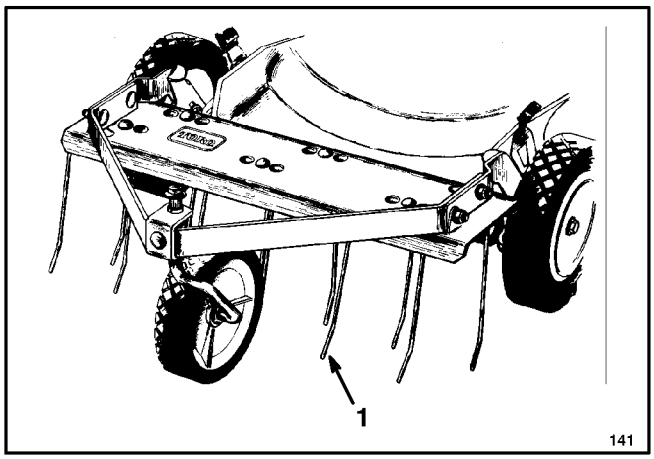

Figure 31

1. Dethatcher attachment

2. Leaf Shredder Kit, Model No. 59180—Installs on underside of mower in minutes without requiring removal of blade. Shreds leaves into small pieces for clean vacuuming into grass bag and convenient disposal (Fig. 32).

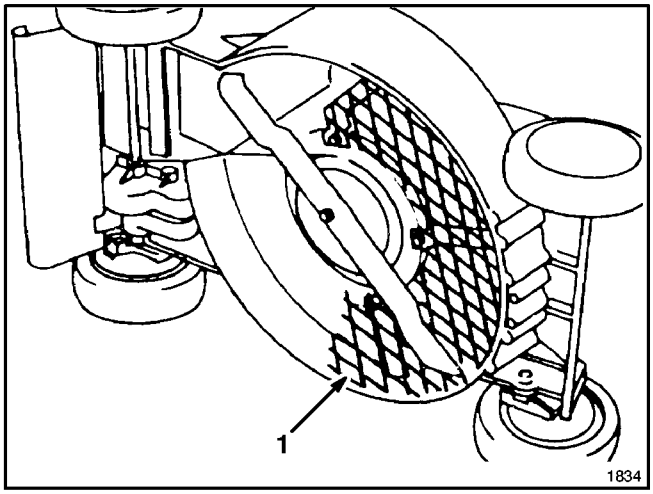

Figure 32

1. Leaf shredder screen

PRODUCT IDENTIFICATION

A model and a serial number decal is located on deck near discharge door. Always refer to specific numbers on this decal in correspondence or when replacement parts are needed.

TORO SERVICE SUPPORT

If help – concerning safety, set–up, operation, maintenance, or troubleshooting – is ever needed, contact the local Authorized TORO Service Dealer or Distributor. In addition to skilled service technicians, the dealer and distributor have factory approved accessories and replacement parts. Keep your Toro all TORO. Buy genuine TORO replacement parts and accessories.

THE TORO STARTING GUARANTEE

A Five Year Limited Warranty
On The Toro GTS 200 OHV Engine

What Is Covered?

The Toro Company guarantees that your TORO GTS 200 Engine will start on the first or second pull for five years from the date of purchase—if you provide the routine maintenance it requires—or we will fix it. The cost of parts and labor are included, but you must pay transportation costs.

What Must You Do To Keep The Warranty In Effect?

You must maintain your TORO GTS 200 Engine by following the maintenance schedule detailed in the Operator's Manual, at your expense. You must record this work in the maintenance chart provided and keep your proof of purchase. You will also need to have your TORO GTS 200 engine serviced annually by an Authorized TORO Service Dealer.

How Do You Get Service?

If the starting performance of your TORO GTS 200 Engine should diminish to the point where it will not start in one or two pulls by a normal, able–bodied adult, you should follow the procedures below:

1. Contact any Authorized TORO Service Dealer or the TORO Distributor.
2. He will either instruct you to return the product to him or recommend another Authorized TORO Service outlet which might be more convenient.
3. Take the product, your maintenance records, and proof of purchase to the Service Dealer.

If, for any reason, you are dissatisfied with the Dealer's analysis of your engine's starting condition, or the assistance provided, please contact your TORO Distributor.

What Does This Warranty Not Cover?

This Warranty does not cover:

1. Any repairs on products used commercially.
2. Normal maintenance including replacement of spark plugs, air filter, fuel filter, and carburetor adjustments.
3. Oil change and lubrication.
4. Repairs or adjustments due to:
   a. Failure to follow proper maintenance procedures;
   b. Rotary mower blade striking an object;
   c. Contaminants in the fuel system;
   d. Improper fuel or fuel mixture (consult your Operator's Manual if in doubt);
   e. Failure to follow the proper storage procedures as specified in the Operator's Manual;
   f. Operation misuse, neglect or accidents;
   g. Repairs or attempted repairs by anyone other than an Authorized TORO Service Dealer.
5. Special operational conditions where starting may require more than two pulls, including:
   a. First time starts after extended period of non–use or seasonal storage;
   b. Cool temperature starts such as those found in early spring and late autumn may require an additional pull or two (applies to rotary products only);
   c. Improper starting procedures. If you are having difficulty starting your unit, please check the Operator's Manual to ensure you are using the correct starting procedures. This can save an unnecessary visit to a Service Dealer.

All warranty repairs reimbursable under this warranty must be performed by an Authorized TORO Service Dealer using Toro approved replacement parts.

The above remedy through repair by an Authorized TORO Service Dealer is the purchaser's sole remedy.

GUARANTEED TO START MAINTENANCE RECORD

To keep the starting guarantee in effect, you must perform the following maintenance after every 25 operating hours, more often in dusty and dirty conditions. Follow the procedures in this Operator's Manual and record information on this chart.

Date	Hours Used	Service Air Cleaner	Change Oil Doesn't apply to 2–Cycle	Lubricate Wheels	Check Spark Plug	Mower Storage