FORM NO. 3319−571GB

TORO®

MODEL NO. 26638 − 8900001 & UP

OPERATOR'S MANUAL

53 CM REAR BAGGER MOWER

⚠ SAFETY INSTRUCTIONS

TRAINING

1. Read the instructions carefully. Be familiar with the controls and the proper use of the equipment.

2. Never allow children or people unfamiliar with these instructions to use the lawnmower. Local regulations may restrict the age of the operator.

3. Never mow while people, especially children, or pets are nearby.

4. Keep in mind that the operator or user is responsible for accidents or hazards occurring to other people or their property.

PREPARATION

1. While mowing, always wear substantial footwear and long trousers. Do not operate the equipment when barefoot or wearing open sandals.

2. Thoroughly inspect the area where the equipment is to be used and remove all objects which may be throw by the machine.

3. Always wear safety glasses or eye shields during operation to protect eyes from foreign objects that may be thrown from the machine. Wearing of hearing protection, protective gloves and a safety helmet is advisable and may be required by local regulations.

4. WARNING − Petrol is highly flammable.

- Store fuel in containers specifically designed for this purpose.
- Refuel outdoors only and do not smoke while refuelling.
- Add fuel before starting the engine. Never remove the cap of the fuel tank or add petrol while the engine is running or when the engine is hot.
- If petrol is spilled, do not attempt to start the engine but move the machine away from the are of spillage and avoid creating any source of ignition until petrol vapors have dissipated.
- Replace all fuel tanks and container caps securely.

5. Replace faulty silencers.

6. Before using, always visually inspect to see that the blades, blade bolts and cutter assembly are not worn or damaged. Replace worn or damaged blades and bolts in sets to preserve balance.

7. On multi-bladed machines, take care as rotating one blade can cause other blades to rotate.

OPERATION

1. Do not operate the engine in a confined space where dangerous carbon monoxide fumes can collect.

2. Mow only in daylight or in good artificial light.

3. Avoid operating the equipment in wet grass, where feasible.

4. Always be sure of your footing on slopes.

5. Walk, never run.

6. For wheeled rotary machines, mow across the face of slopes, never up and down.

7. Exercise extreme caution when changing direction on slopes.

8. Do not mow excessively steep slopes.

9. Use extreme caution when reversing or pulling the lawnmower towards you.

10. Stop the blade(s) if the lawnmower has to be tilted for transportation when crossing surfaces other than grass, and when transporting the lawnmower to and from the area to be mowed.

11. Never operate the lawnmower with defective guards or shields, or without safety devices, for example deflectors and/or grass catchers, in place.

12. Do not change the engine governor settings or overspeed the engine.

13. Disengage all blade and drive clutches before starting the engine.

14. Start the engine or switch on the motor carefully according to instructions and with feet well away from the blade(s).

15. Do not tilt the lawnmower when starting the engine or switching on the motor, except if the lawnmower has to be tilted for starting. In this case, do not tilt it more than absolutely necessary and lift only the part which is away from the operator.

16. Do not start the engine when standing in front of the discharge chute.

©The Toro Company−1997
All Rights Reserved

SAFETY INSTRUCTIONS

17. Do not put hands or feet near or under rotating parts. Keep clear of the discharge opening at all times.

18. Never pick up or carry a lawnmower while the engine is running.

19. Stop the engine and disconnect the spark plug wire.

- before clearing blockages or unclogging chute;
- before checking, cleaning or working on the lawnmower;
- after striking a foreign object. Inspect the lawnmower for damage and make repairs before restarting and operating the lawnmower;
- if lawnmower starts to vibrate abnormally (check immediately).

20. Stop the engine

- whenever you leave the lawnmower;
- before refuelling.

21. Reduce the throttle setting during engine shut down and, if the engine is provided with a shut-off valve, turn the fuel off at the conclusion of mowing.

22. Go slow when using a trailing seat.

MAINTENANCE AND STORAGE

1. Keep all nuts, bolts and screws tight to be sure the equipment is in safe working condition.

2. Never store the equipment with petrol in the tank inside a building where fumes may reach an open flame or spark.

3. Allow the engine to cool before storing in any enclosure.

4. To reduce the fire hazard, keep the engine, silencer, battery compartment and petrol storage area free of grass, leaves, or excessive grease.

5. Check the grass catcher frequently for wear or deterioration.

6. Replace worn or damaged parts for safety.

7. If the fuel tank has to be drained, this should be done outdoors.

SOUND PRESSURE LEVEL

This unit has an equivalent continuous A-weighted sound pressure at the operator ear of: 89 dB(A), based on measurements of identical machines per ANSI B71.5-1984 procedures.

SOUND POWER LEVEL

This unit has a sound power level of: 100 dB(A)/1 pW, based on measurements of identical machines per Directive 84/538/EEC and amendments.

VIBRATION LEVEL

This unit has a maximum hand-arm vibration level of 4.6 m/s^2, based on measurement of identical machines per ISO 5349 procedures.

SYMBOL GLOSSARY

Safety alert triangle–– symbol within triangle indicates a hazard

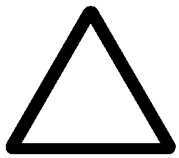

Safety alert symbol



Read operator's manual



Consult technical manual for proper service procedures



Stay a safe distance from the machine

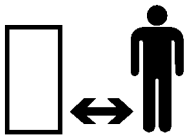

Stay a safe distance from the mower

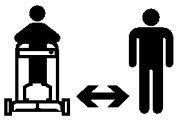

Thrown or flying objects–– Whole body exposure

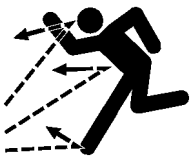

Thrown or flying objects–– Rotary side-mounted mower. Keep deflector shield in place.

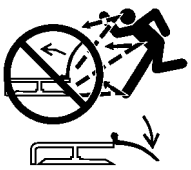

Stop engine before leaving operator position



Do not open or remove safety shields while engine is running

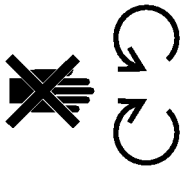

Rotating blade can cut off toes or fingers. Stay clear of mower blade as long as engine is running.



To avoid blade failure when mulching, use blade stiffener when mower is equipped with mulching plug

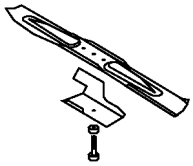

Transmission

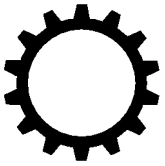

Oil



On/Run



Engage

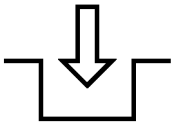

Disengage

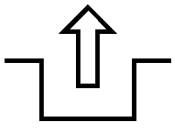

Battery charging condition

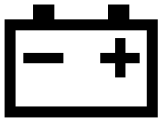

SYMBOL GLOSSARY

Hourmeter/elapsed operating hours

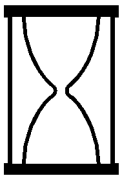

Fast



Slow



Decreasing/increasing



Grease lubrication point



Engine start

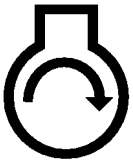

Engine stop



Choke

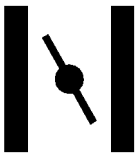

Primer (start aid)

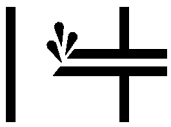

Push primer three times

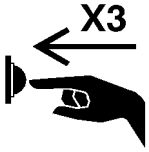

Fuel



Neutral

N

First gear

1

Second gear

2

Third gear

3

Cutting element–– basic symbol



Cutting element–– Height adjustment



Pull rope

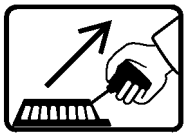

Wheel



Wheel traction

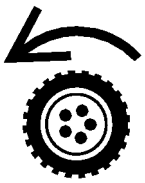

SYMBOL GLOSSARY

Properly dispose of batteries



Insert key into ignition switch



Turn key in ignition switch



Move control



Raise control bar



Lower control bar



Lower control bar



Raise control bar



Raise/lower control bar



Raise/lower control bar

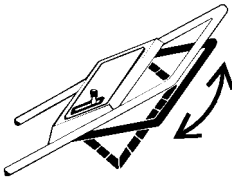

Raise control bar

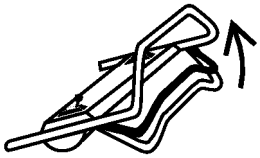

TABLE OF CONTENTS

	Page
Set−Up Instructions	6
Before Operating	7
Operating Instructions	9
Maintenance	14
Recommended Maintenance Schedule	14
Servicing Air Cleaner	14
Replacing Spark Plug	15
Draining Gasoline	15
Changing Crankcase Oil	15
Adjusting Throttle	16
Adjusting Traction Wheel Drive	16
Inspecting/Removing/Sharpening Blade	17
Lubrication	18
Adjusting Blade Brake	18
Cleaning Blade Brake Clutch Shields	19
Cleaning Mower Housing	20
Preparing Mower For Storage	20
Optional Equipment	21
Product Identification	21
Toro Service Support	21
The Toro Starting Guarantee	22
Guaranteed To Start Maintenance Record	23

SET–UP INSTRUCTIONS

INSTALL HANDLE

1. INSTALLING HANDLE—Loosen knobs on mounting brackets (Fig. 1).

2. Position mounting brackets in a vertical position so that holes face up.

3. Slide handle ends into holes in mounting brackets until handle ends are completely seated in brackets (Fig. 1). Make sure cables rest on top of mounting brackets (Fig. 2).

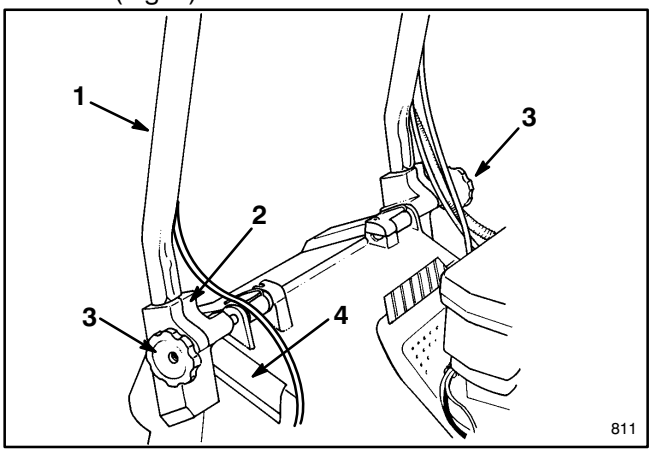

Figure 1

1. Handle
2. Mounting bracket
3. Knob
4. Housing pocket

4. Rotate handle and brackets rearward until brackets fit securely into housing pockets (Fig. 2).

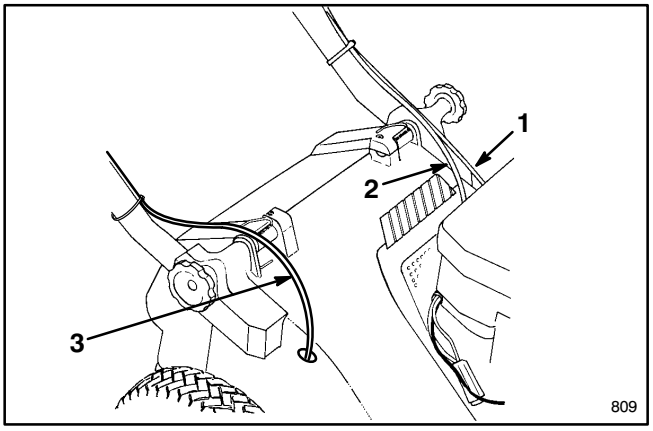

Figure 2

1. Throttle cable
2. Traction cable
3. Gearshift cable

5. Tighten knobs until edges of slots on top of mounting brackets touch.

6. Use cable ties to secure cables to lower ends of handle tubes (Fig. 3). Cable ties should be positioned 25 mm (1”) from bend in handles. See Figure 3 for correct placement.

Note: Make sure cables do not interfere with the raising or lowering of discharge door.

7. Cut excess length from ends of cable ties.

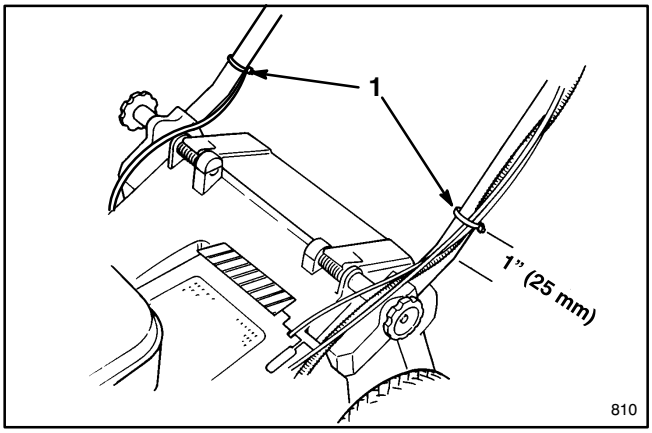

Figure 3

1. Cable tie

INSTALL STARTER ROPE

1. Pull the starter rope through the rope guide on the handle (Fig. 4). To make the rope easier to loop, squeeze the control bar on the handle to release the blade brake.

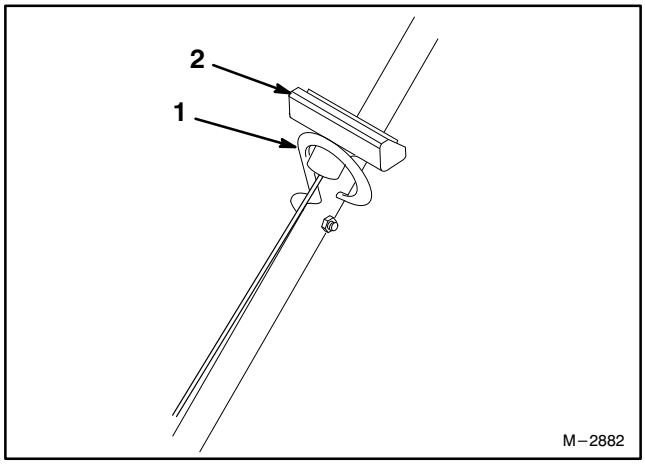

Figure 4

1. Rope guide
2. Starter rope

SET–UP INSTRUCTIONS

INSTALL GRASS BAG

1. Raise discharge door, slide bag ramp attached to bag into discharge opening, and hook bag frame onto rounded portion of mounting brackets (Fig. 5).

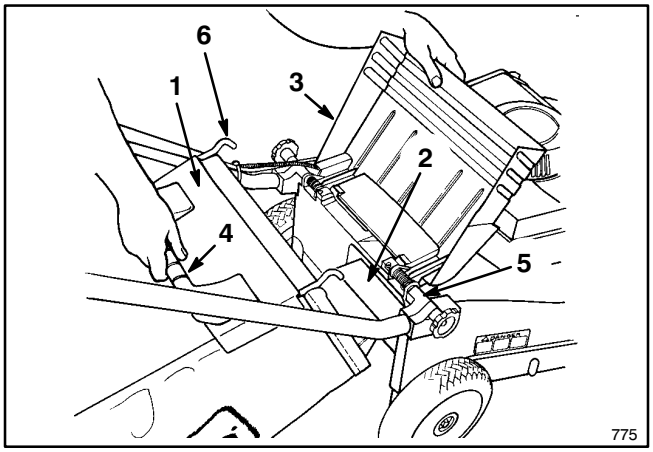

Figure 5

1. Bag door
2. Bag ramp
3. Discharge door
4. Bag handle
5. Mounting bracket
6. Bag frame hook

Note: Make sure grass bag door is **fully** closed against grass bag before installing bag on mower.

2. Allow discharge door to rest on top of bag (Fig. 6).

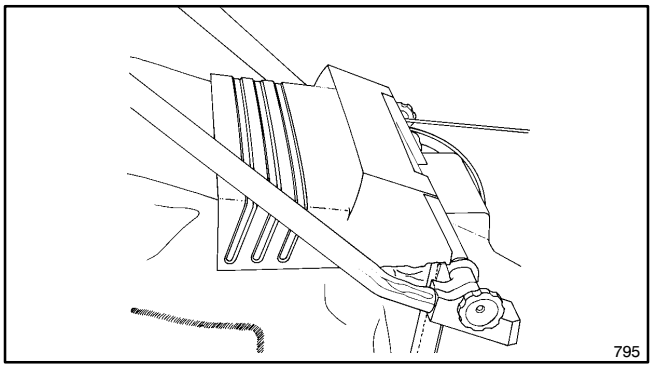

Figure 6

BEFORE OPERATING

FILL CRANKCASE WITH OIL

Fill crankcase with SAE 30 or 10W30 oil until oil level reaches FULL mark on dipstick as shown in Figure 7. The maximum crankcase capacity is 22 ounces (0.65 liters) of oil. Use any high quality detergent oil having the American Petroleum Institute (API) "service classification" — SF, SG, SH or SJ.

Before each use, ensure oil level is between ADD and FULL marks (Fig. 7). Add oil if level is low.

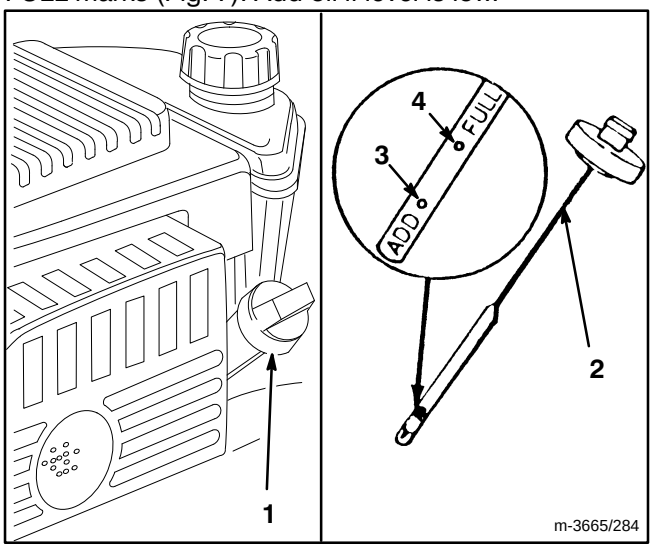

Figure 7

1. Oil fill tube
2. Dipstick
3. ADD mark
4. FULL mark

1. Position mower on level surface and clean around oil dipstick.

2. Remove dipstick by rotating cap counterclockwise 1/4 turn.

3. Wipe dipstick and insert it into filler neck. Rotate cap 1/4 turn. Then remove dipstick and check level of oil (Fig. 7). If level is low, add only enough oil to raise level to FULL mark on dipstick. **DO NOT FILL ABOVE FULL MARK BECAUSE ENGINE COULD BE DAMAGED WHEN STARTED. POUR OIL SLOWLY.**

Note: Check oil level each time mower is used or after every 5 hours of mower operation. Initially, change oil after the first 5 hours of operation; thereafter, change oil after every 50 hours of operation. Refer to Changing Crankcase Oil, page 15. More frequent oil changes are required in dusty or dirty conditions.

4. Insert dipstick into filler neck and rotate cap clockwise 1/4 turn to lock it in place.

BEFORE OPERATING

FILL FUEL TANK WITH GASOLINE

WARNING

DANGER: Gasoline is extremely flammable and explosive under certain conditions. DO NOT SMOKE when handling fuel and keep fuel far away from open flames and sparks. Never buy more than a 30 day supply of gasoline. Store it in an approved container. Keep gasoline out of reach of children.

Refuel outdoors and only when engine is cold. Do not fill tank full. Fill tank to within 6 to 13 mm (1/4" to 1/2") from top of tank, not into filler neck. This space is for expansion of fuel. Use funnel or spout to prevent spilling. Wipe up any spilled gas.

Note: The Toro Company strongly recommends the use of fresh, clean, **UNLEADED** regular grade gasoline in Toro gasoline powered products. Unleaded gasoline burns cleaner, extends engine life, and promotes good starting by reducing the build−up of combustion chamber deposits. Leaded gasoline can be used if unleaded is not available.

1. Clean around fuel tank cap (Fig. 8) and remove cap from tank.

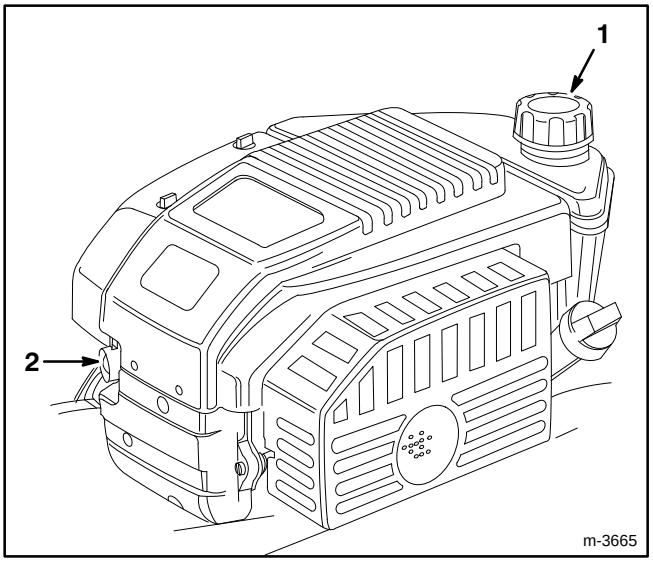

Figure 8

1. Fuel tank cap **2. Primer**

2. Using unleaded gasoline, fill fuel tank to within 6 to 13 mm (1/4 to 1/2 inch) from top of tank, not into the filler neck. Do not fill tank full.

3. Install fuel tank cap and wipe up any spilled gasoline.

Toro also recommends that Toro Stabilizer/Conditioner be used regularly in all Toro gasoline powered products during operation and storage seasons. Toro Stabilizer/Conditioner cleans the engine during operation and prevents gum-like varnish deposits from forming in the engine during periods of storage.

IMPORTANT: Do not mix oil with the gasoline. Never use methanol, gasoline containing methanol, gasohol containing more than 10% ethanol, premium gasoline or white gas because engine fuel system damage could result.

Do not use fuel additives other than those manufactured for fuel stabilization during storage such as Toro's Stabilizer/Conditioner or a similar product. Toro's Stabilizer/Conditioner is a petroleum distillate based conditioner/stabilizer. Toro does not recommend stabilizers with an alcohol base such as ethanol, methanol or isopropyl. Additives should not be used to try to enhance the power or performance of machine.

OPERATING INSTRUCTIONS

OPERATING TIPS

1. CHECK OIL LEVEL—Maintain oil level between ADD and FULL range as shown on dipstick (Fig. 7).

2. BEFORE EACH MOWING—Ensure self−propelled drive and control bar function properly. Traction drive and blade are designed to stop when control bar is released.

3. CUTTING AND BAGGING—Best results are achieved when engine is running at maximum speed and only about 1/3 of the grass blade is cut. If long grass must be cut, use highest height−of−cut setting for first mowing. Then recut the grass at a more normal setting. If too long of grass is cut, mower may plug and cause engine to stall.

When cutting in dry, dusty conditions move the throttle to a slower speed to reduce the amount of dust generated by mower.

4. SHARP BLADE—Begin each cutting season with a sharp blade. Periodically file down nicks.

STARTING, STOPPING, AND SELF−PROPELLING

CONTROLS—Throttle, ground speed control, and self−propelled control bar and fingertip starter are on upper handle (Fig. 9).

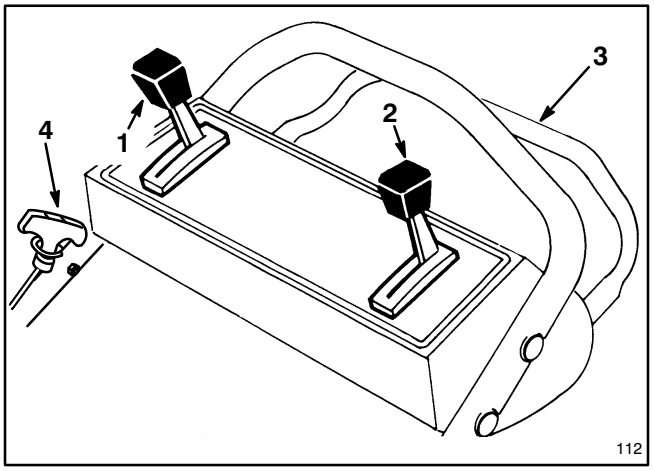

Figure 9

1. **Ground speed**
2. **Throttle**
3. **Self−propelled control bar**
4. **Fingertip starter**

1. Push spark plug wire onto spark plug (Fig. 10).

2. Move ground speed control to **N** (NEUTRAL) position.

3. Move throttle control to (FAST) position.

4. Push primer three (3) times (Fig. 8). **Wait about two (2) seconds between each push.**

Note: Do not use primer to restart a warm engine after a short shutdown. However, cool weather may require priming to be repeated.

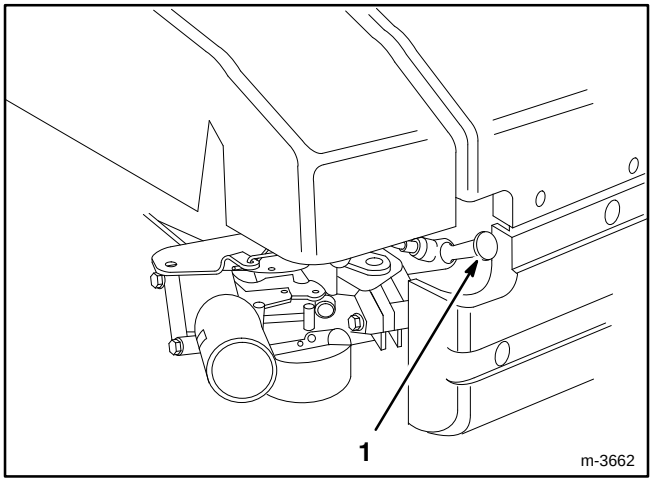

Figure 10

1. **Spark plug wire**

5. Pull recoil starter out until positive engagement results; then pull vigorously to start the engine. When engine starts, regulate engine speed as desired.

6. TRACTION OPERATION (Fig. 9)—Move ground speed control to desired setting. Number “1” is slow, “2” is medium, and “3” is a fast walking pace. Ground speed varies, depending on space between control bar and handle. Move ground speed control to **N** when using the mower for trimming and whenever leaving the mower.

7. BLADE AND TRACTION OPERATION (Fig. 11)—Move control bar down to “A” and raise to “B” to engage blade. Squeeze control bar against handle “C” to drive. To disengage traction drive but keep blade engaged, gradually release control bar to mid position. To self−propel with blade disengaged, simply squeeze control bar against handle, eliminating downward movement necessary for blade engagement.

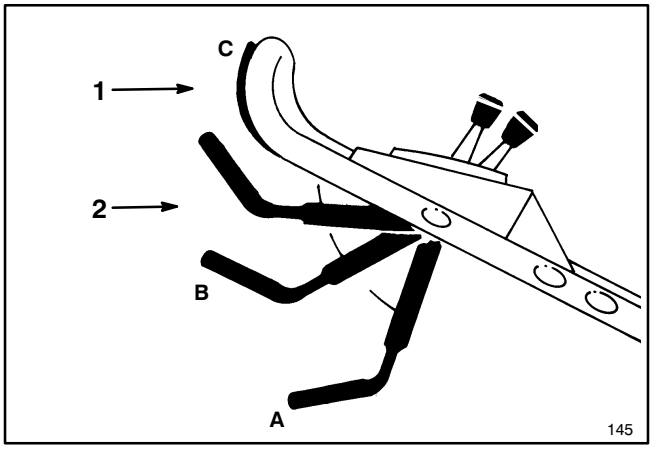

Figure 11

1. **Speed varies**
2. **Mid position**

OPERATING INSTRUCTIONS

Note: The drive wheels are equipped with freewheeling clutches which enable the mower to be pulled rearward easier when the wheel drive is disengaged. To disengage the clutches, mower must be pushed forward at least 2.5 cm (1") after wheel drive operation has stopped.

8. STOPPING (Fig. 11)—Release control bar to stop blade and traction drive. Move ground speed control to "N". To stop engine, move throttle to STOP (OFF). Pull wire off spark plug if mower will be unattended or not used.

USING GRASS BAG

1. Stop engine and wait for all moving parts to stop.

2. INSTALLING BAG—Raise discharge door, slide bag ramp attached to bag into discharge opening, and hook bag frame onto mounting bracket (Fig. 12). Allow discharge door to rest on top of bag (Fig. 13).

Note: Make sure grass bag door is **fully** closed against grass bag before installing bag on mower.

3. REMOVING BAG—**Stop engine and wait for all moving parts to stop.** For protection, always keep hands and feet away from mower housing while engine is running. Raise discharge door. While holding discharge door up, grasp handle on grass bag and lift bag off mower. Allow discharge door to close.

Note: When removing the grass bag, the bag ramp scoops out any clippings that may be plugging the discharge opening. If the discharge opening remains plugged, pull wire off spark plug and clear all clippings from the mower.

4. EMPTYING BAG—Grasp bag handle and rear of grass bag. Tip bag door up and gradually tip bag forward to empty clippings.

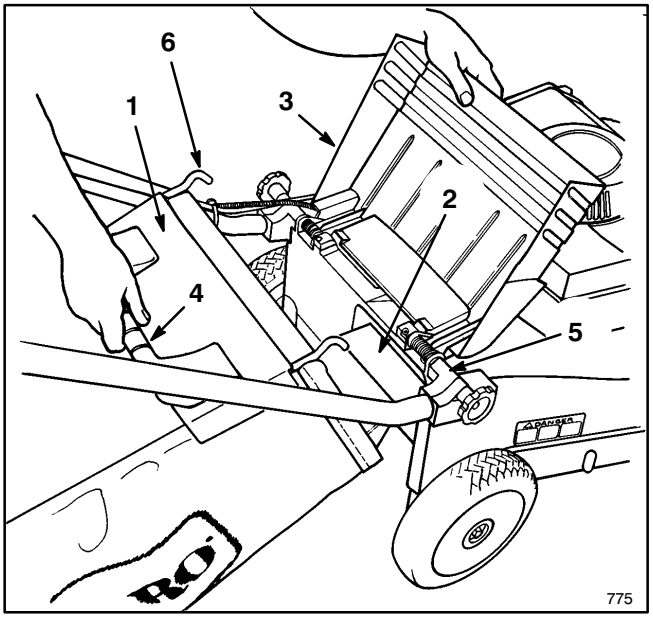

Figure 12

1. **Bag door**
2. **Bag ramp**
3. **Discharge door**
4. **Bag handle**
5. **Mounting bracket**
6. **Bag frame hook**

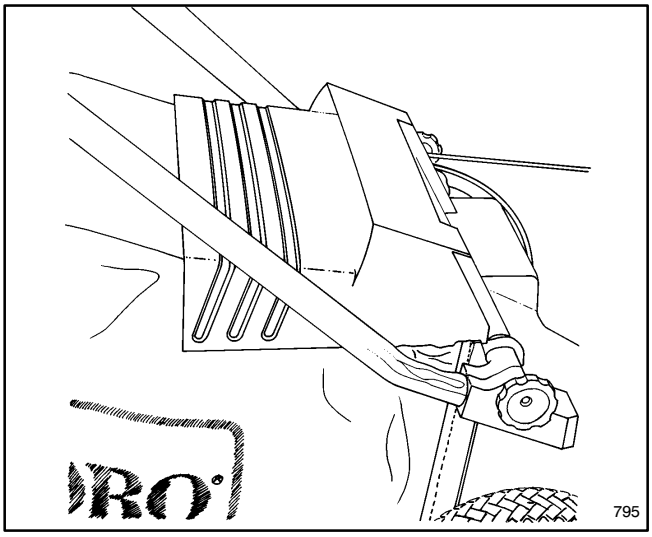

Figure 13

DANGER

- **Grass clippings and other objects can be thrown from an open discharge tunnel.**
- **Objects thrown with enough force could cause serious personal injury or death to operator or bystander.**
- **Never open door on discharge tunnel when engine is running unless the grass bag is securely installed.**

DANGER

- **A worn grass bag could allow small stones and other similar debris to be thrown in operator's or bystander's direction.**
- **Thrown objects can cause serious personal injury or death to operator or bystanders.**
- **Check the grass bag frequently. If it is damaged, install a new genuine TORO replacement bag.**

ADJUSTING HEIGHT–OF–CUT

Three numbers cast into the housing represent the height–of–cut settings. The diamond between each number represents a 13 mm (1/2") increment.

1. Stop the engine and wait for all moving parts to stop. Pull wire off spark plug.

OPERATING INSTRUCTIONS

DANGER

- **Adjusting height−of−cut levers could bring hands into contact with moving blade.**
- **Contact with blade could cause serious personal injury.**
- **Do not adjust the height−of−cut settings when engine is running and blade is rotating.**
- **Do not put fingers under housing to lift mower when adjusting height−of−cut levers.**

2. For easier adjustment, lift housing up so wheel is off ground. **Do not place hands under deck to lift housing.** Squeeze adjusting lever toward wheel and move to desired setting (Fig. 14). Ensure pin on adjusting lever engages notch in housing. Adjust all wheels to the same setting.

Note: Front wheels can be adjusted to 13 mm (1/2"). Move adjusting lever past "1" and release pin into notch in housing.

3. In conditions when maximum power is required or when cutting in spongy thatch that causes rear wheels to sink in turf, raise rear wheel setting one increment higher. Make sure wheel settings are returned to equal settings, when cutting in normal conditions, to achieve the best quality of cut.

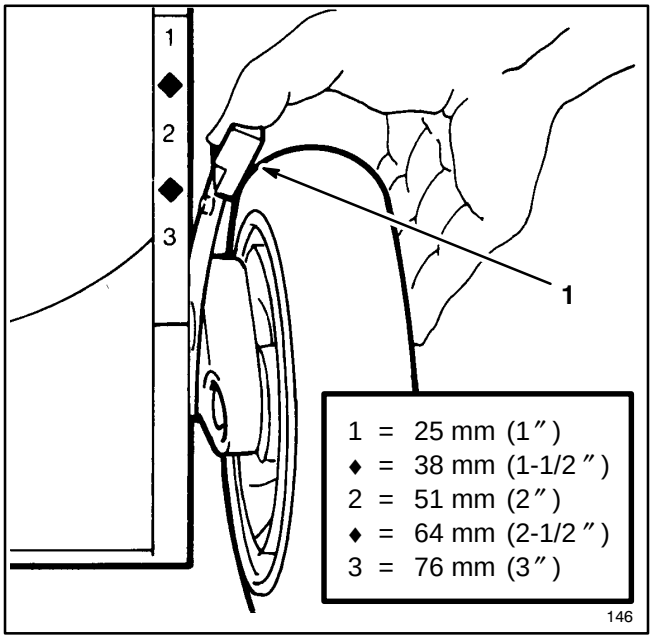

Figure 14

1. Height-of-cut lever

CHECK CONTROL BAR OPERATION

Check the control bar before each use to ensure the Blade Brake Clutch (BBC) system is operating properly.

A: Normal Control Bar Operation Test

1. With engine off, wheel mower onto a paved surface in a non-windy area.

2. Put all four wheels in "3" height−of−cut position (Fig. 14).

3. Put ground speed selector in **N** (neutral) position.

4. Take a half sheet of newspaper and crumple it into a ball small enough to go under deck (approx. three inches in diameter) (Fig. 15).

5. Place ball of newspaper five inches in front of mower (Fig. 15).

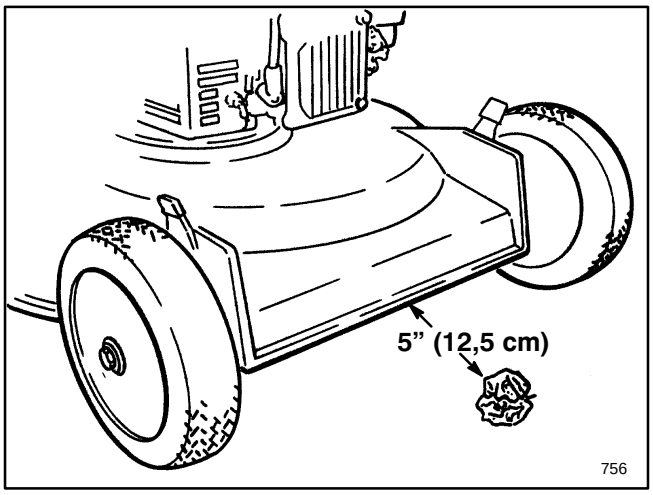

Figure 15

6. Start the engine.

7. Push control bar down to lowest position (Fig. 16).

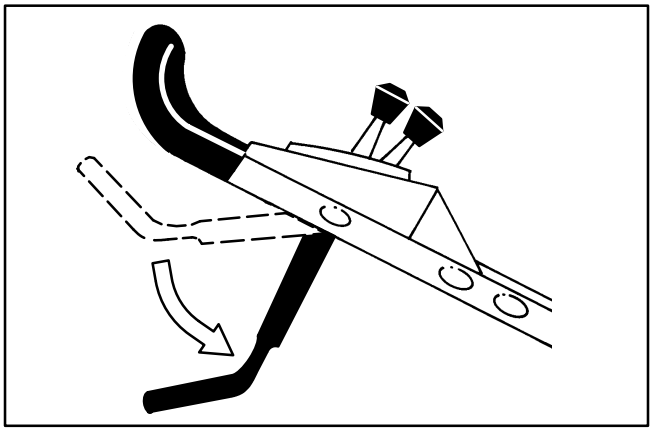

Figure 16

8. Lift control bar to the normal "blade engaged" position (about one inch below the handle) (Position A, Fig. 17). The "fan" noise indicates that the mower blade is turning.

9. Release the control bar (Position B, Fig. 17). A “bang” should be heard. The blade should stop running in three seconds.

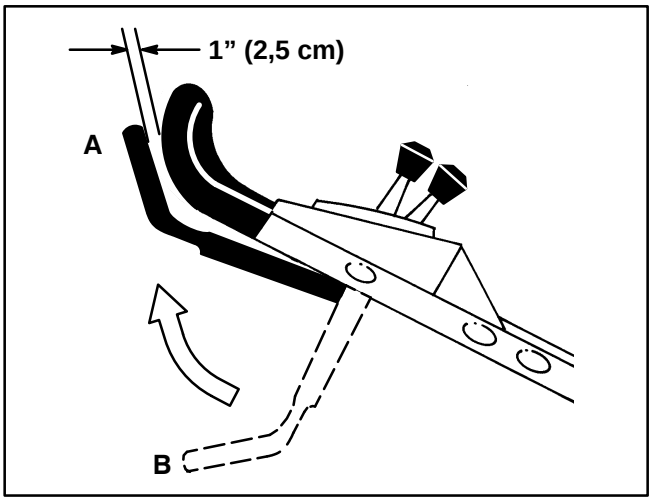

Figure 17

10. Immediately push the mower over the newspaper ball.

11. Turn off the engine.

12. Walk around the mower to check for the newspaper ball. If the ball did not go under the deck, repeat steps 5−11.

13. Pull mower away from the newspaper. If the newspaper ball unravels or is shredded, it indicates that the blade has not stopped as it should, resulting in an unsafe operating condition. Contact an Authorized Toro Service Dealer for an inspection at your earliest convenience. However, to detect BBC system deterioration **before** it affects normal operation, we also ask you to perform Special Control Bar Test B which follows.

B: Special Control Bar Test

1. With the engine off, wheel mower onto a paved surface in a non-windy area.

2. Put all four wheels in “3” height−of−cut position (Fig. 14).

3. Put ground speed selector in **N** (neutral) position.

4. Take a half sheet of newspaper and crumple it into a ball small enough to go under the deck (approx. three inches in diameter) (Fig. 15).

5. Place ball of newspaper five inches in front of mower (Fig. 15).

6. Start the engine.

7. Push control bar down to lowest position (Fig. 18, position B).

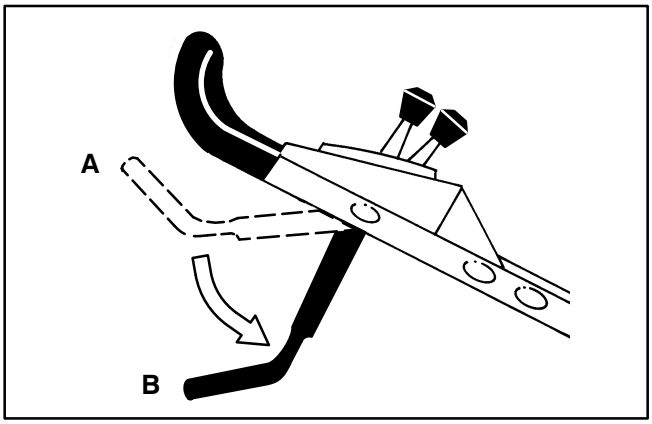

Figure 18

8. Bring the control bar up into the mid position (about 5 inches below the handle cross bar) (Fig. 19, position C).

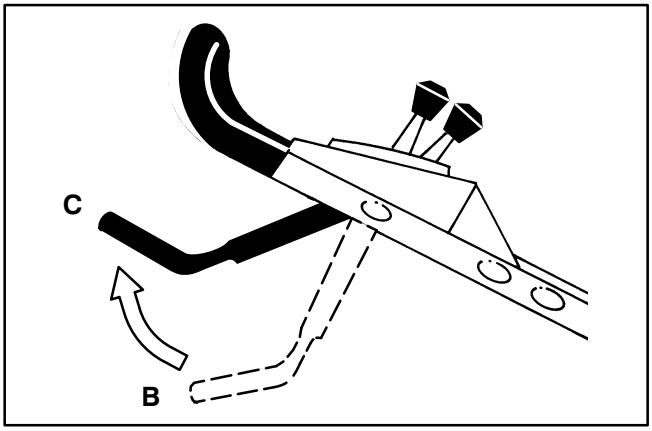

Figure 19

Note: This intermediate position (C) is not the “natural” operating position of the control bar. However, it has proven to be useful in early detection of BBC sticking which could create an unsafe condition later in the life of the mower.

9. Release control bar (Fig. 19, position B).

Note: If a loud bang is heard, the control bar has been raised too high. Repeat steps 7, 8 and 9, but do not raise the control bar as high as in step 8.

10. Immediately push the mower over the newspaper ball.

11. Turn off the engine.

12. Walk around the mower to check for the newspaper ball. If the ball did not go under the deck, repeat steps 5−11.

13. Pull mower away from newspaper. If the newspaper ball unravels or is shredded, it indicates the system could be experiencing wear/deterioration which could result in an unsafe operating condition. Use care in operating the mower and BBC system and contact an Authorized Toro Service Dealer for an inspection of your mower at your earliest convenience. They will ensure that appropriate corrective measures are performed and your mower is restored to proper operating condition.

OPERATING INSTRUCTIONS

⚠ DANGER

POTENTIAL HAZARD

- **If the Blade Brake Clutch system is inoperative, blade will continue to rotate when control bar is released. Contact with blade could occur.**

WHAT CAN HAPPEN

- **Blade contact can cause serious personal injury or death.**

HOW TO AVOID THE HAZARD

- **Never use a BBC equipped power mower with an inoperative safety system.**
- **Return your lawn mower to your dealer for repair if a safety system fails to operate properly.**

SPECIAL NOTE: Whenever performing operations such as cleaning the mower, first stop the engine and disconnect the spark plug wire. Remove key from switch on electric start model. As with any lawnmower, regardless of the safety features and blade stopping devices used, operators should keep all body parts away from the cutting blade area whenever the mower's engine is running, and keep bystanders away as well.

Should you require further information or assistance, feel free to contact us at:

The Toro Company
Attn: Consumer Service Department
8111 Lyndale Avenue South
Bloomington, MN 55420−1196
(612) 887−8255

The grass bag can be used for an additional test to check the Blade Brake Clutch mechanism.

1. Install the empty grass bag on the discharge tunnel.

2. Start the engine.

3. Push the control bar (Fig. 18) down to the lowest position.

4. Lift the control bar to the normal "blade engaged position, about one inch below the handle. The bag should begin to inflate which indicates the blade is engaged and rotating.

5. Release control bar. If the bag does not immediately deflate, it indicates the blade is still rotating. Deterioration of the Blade Brake Clutch mechanism may have set in, which could result in an unsafe operating condition. Have mower inspected by an Authorized TORO Service Dealer.

MAINTENANCE

Continued safe and dependable operation requires routine maintenance.

RECOMMENDED MAINTENANCE SCHEDULE

Service Item	Service Operation	After every use	5 Hours	25 Hours	50 Hours	100 Hours
Housing	Clean built-up grass clippings and dirt.	X				
Fasteners	Check blade and engine mounting fasteners frequently. Keep all nuts, bolts and screws tight to be sure the mower is in safe working condition.		X			
Lubrication	Grease rear grease fittings.			X		
Spark Plug	Inspect every 25 hours and replace if necessary. Replace after every 100 operating hours or once a season.			X		
Engine Oil	Drain and refill engine crankcase with fresh oil after first **5** hours of operation. Thereafter, change every **50** hours. Change oil every **25** hours when operating under heavy load or in high temperatures.				X	
Blade	Sharpen or replace; maintain more frequently if edge is dulled quickly in rough or sandy conditions.				X	
Blade Brake	Check stopping time every 50 hours or at start of each mowing season. Blade must stop within three seconds of releasing bail; if not see your Authorized Toro Service Dealer for repair.				X	
Fuel System	Check for leakage and/or deterioration of fuel hose. Replace if necessary.				X	
Air Filters	Clean or replace each mowing season or every 100 hours. **Clean more frequently if operating conditions are dusty.**					X
Cooling System	Clean grass, clippings, debris or dirt that may clog engine air cooling fins and starter. Clean more frequently if operated under dirty or high chaff conditions.					X

⚠ CAUTION

- **When wire is on spark plug, someone could accidentally start the engine.**
- **Accidental starting of engine could cause serious injury to operator or bystanders.**
- **Pull wire off spark plug before performing any maintenance or adjustments.**

SERVICING AIR CLEANER

Normally, clean air cleaner pre-cleaner after every 25 operating hours or every season. Clean the paper cartridge after every 100 hours or every season. More frequent cleaning is required when mower is operated in dusty or dirty conditions. Replace air cleaner parts, if very dirty.

1. Stop engine and pull wire off spark plug.

2. Remove two (2) knobs securing air cleaner cover to engine (Fig. 20).

MAINTENANCE

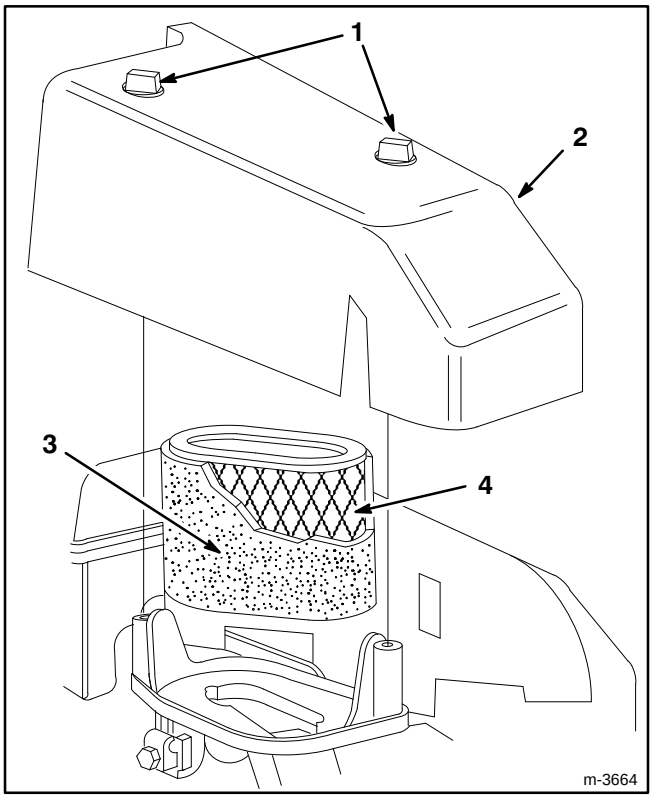

Figure 20

1. Knob	**3. Foam pre-cleaner**
2 Cover	**4 Paper cartridge**

3. Lift cover off. Clean cover thoroughly.

4. Carefully remove pre-cleaner. If pre-cleaner is dirty, carefully wash it in a solution of liquid soap and warm water. Rinse in clear water. Allow to dry thoroughly before using.

5. If paper cartridge is dirty, clean the paper filter by tapping it **gently** on a flat surface. If very dirty, replace cartridge.

IMPORTANT: Do not oil pre−cleaner or paper cartridge. Do not use pressurized air to clean paper cartridge.

6. Reinstall pre-cleaner over paper cartridge. Reinstall air cleaner cover and tighten securely in place with two (2) knobs.

IMPORTANT: Do not operate engine without air cleaner element otherwise extreme engine wear and damage will likely result.

REPLACING SPARK PLUG

Use a CHAMPION RC12YC spark plug or equivalent. Correct air gap is 0.5 mm (0.020”). Remove plug after every 25 operating hours and check its condition.

1. Stop engine and wait for it to cool. Pull wire off spark plug (Fig. 10).

2. Clean around spark plug and remove plug from cylinder head.

IMPORTANT: Replace a cracked, fouled, or dirty spark plug. Do not sand blast, scrape, or clean electrodes because engine damage could result from grit entering cylinder.

3. Set air gap at 0.5 mm (0.020”) (Fig. 21). Install correctly gapped spark plug and gasket seal. Tighten plug firmly to 19 N·m (14 ft−lb).

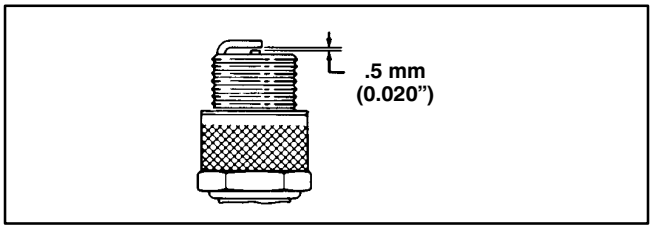

Figure 21

DRAINING GASOLINE

1. Stop engine and wait for engine to cool. Pull wire off spark plug (Fig. 10).

Note: Drain gasoline from a cold engine only.

2. Remove cap from fuel tank and use pump−type syphon to drain fuel into clean gas can.

Note: This is the only procedure recommended for draining fuel.

CHANGING CRANKCASE OIL

Change oil after the first 5 operating hours and after every 50 hours thereafter. Since warm oil drains better and carries more contaminants than cold, run engine for several minutes before draining oil.

1. Drain gasoline. Refer to Draining Gasoline section.

2. Run engine until it dies. Try starting engine once more to make sure gas is out of carburetor.

3. Pull wire off spark plug (Fig. 10).

4. Lift discharge door and remove grass bag. Drain gasoline from fuel tank: refer to Draining Gasoline, page 15.

5. Remove dipstick from oil fill tube and place a drain pan next to left side of mower.

6. Tip mower on its left side, allowing oil to drain into drain pan (Fig. 22).

7. When oil is drained, return mower to upright position and add fresh oil to engine. Refer to Fill Crankcase With Oil, page 7.

8. Reconnect spark plug wire.

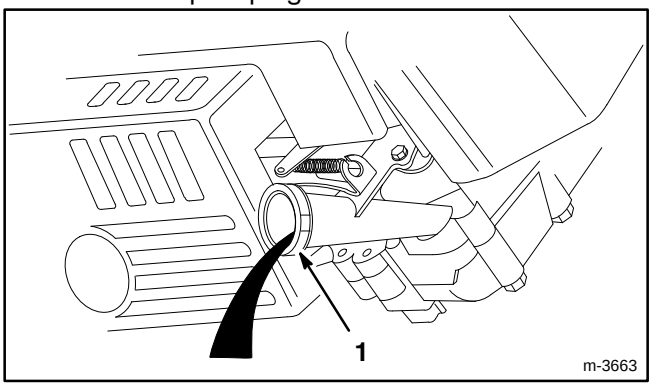

Figure 22

1. Oil fill tube

ADJUSTING THROTTLE

Throttle control adjustment may be required if engine does not start or stop. Whenever a new throttle control cable is installed, the throttle must be adjusted.

1. Stop engine and pull wire off spark plug (Fig. 10).

2. Loosen cable clamp screw until throttle cable slides (Fig. 23).

3. Move governor control lever, throttle cable and casing in direction of arrow as far as possible (Fig. 23).

4. Move throttle control to (FAST position).

5. Tighten cable clamp screw to lock adjustment in place.

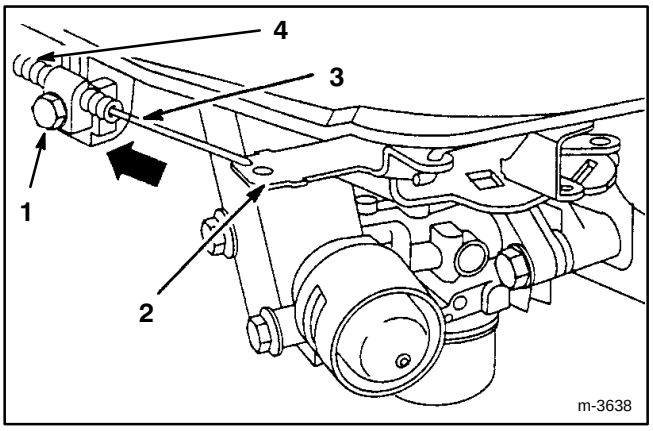

Figure 23

1. **Cable clamp screw**
2. **Governor control lever**
3. **Throttle cable**
4. **Casing**

ADJUSTING WHEEL DRIVE

If mower does not self−propel or has a tendency to creep forward when drive is not engaged, an adjustment to the wheel traction control cable is necessary.

1. Stop engine and pull wire off spark plug (Fig. 10).

2. Lift control bar until some resistance is felt. Control bar should be 38 mm (1 1/2") from handle when properly adjusted (Fig. 24).

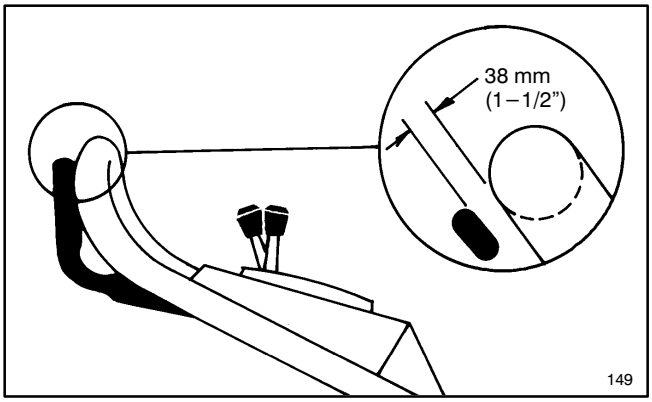

Figure 24

3. To adjust wheel drive cable, rotate knob under left front of control panel (Fig. 25). Rotate knob in positive (+) direction to increase distance between control bar and handle. Turn knob in negative (−) direction to decrease distance between control bar and handle.

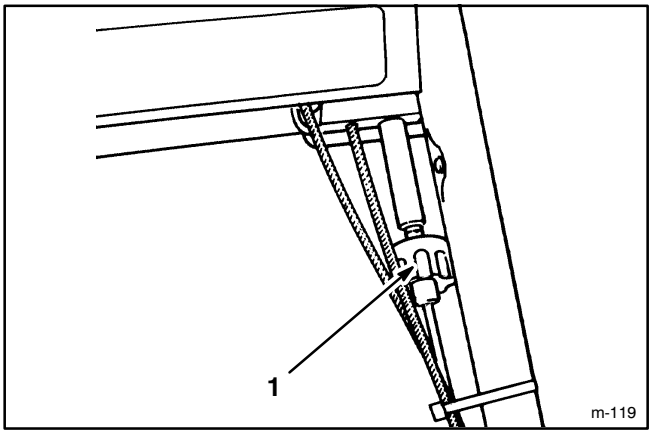

Figure 25

1. Plastic knob

4. Repeat steps 2 and 3 until properly adjusted.

MAINTENANCE

INSPECTING/REMOVING/SHARPENING BLADE

1. Stop engine and pull wire off spark plug (Fig. 10).

2. Drain gasoline from fuel tank; refer to Draining Gasoline, page 15.

3. Tip mower on its left side. Avoid rotating blade as starting problems may result.

4. INSPECTING BLADE—Carefully examine blade for sharpness and wear, especially where flat and curved parts meet (Fig. 26A). Since sand and abrasive material can wear away the metal that connects the flat and curved parts of the blade, check blade before using the mower. If a slot or wear is noticed, (Fig. 26B & C), replace blade with a new TORO blade. Refer to step 5.

Note: For optimum performance, install a new TORO blade before cutting season begins. During the year, file down small nicks to maintain the cutting edge.

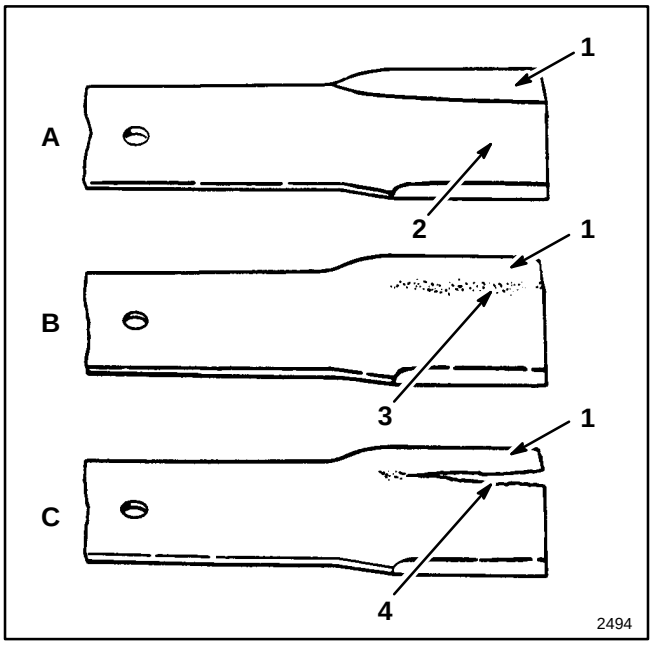

Figure 26

1. **Sail**
2. **Flat part of blade**
3. **Wear**
4. **Slot formed**

5. REMOVING BLADE—Grasp end of blade using a rag or thickly padded glove. Remove blade nuts, anti−scalp cup, blade, blade spacer and rotating screen (Fig. 27).

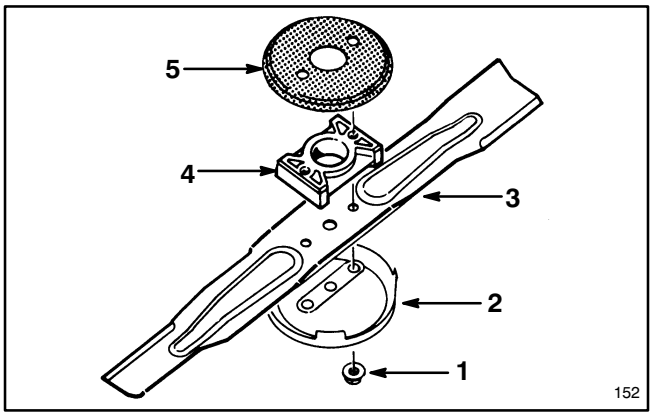

Figure 27

1. **Blade nut**
2. **Anti−scalp cup**
3. **Blade**
4. **Blade spacer**
5. **Rotating screen**

DANGER

- **A worn or damaged blade could break and a piece of blade could be thrown into operator's or bystander's area.**
- **A thrown piece of blade could cause serious personal injury or death to operator or bystanders.**
- **Inspect blade periodically for wear or damage.**
- **Replace a worn or damaged blade.**

6. SHARPENING BLADE—Using a file, sharpen top side of blade and maintain original cutting angle (Fig. 28). The blade remains balanced if the same amount of material is removed from both cutting edges.

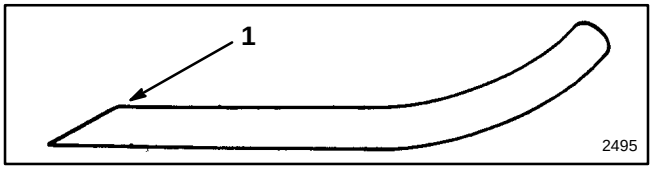

Figure 28

1. **Sharpen at this angle only**

IMPORTANT: Check balance of blade by putting it on a blade balancer. An inexpensive balancer can be purchased at a hardware store. A balanced blade stays in a horizontal position and an unbalanced blade settles to the heavy side. If blade is not balanced, file more metal off cutting edge on heavy end of blade.

7. Install rotating screen (outside flange pointing away from housing), blade spacer, sharp, balanced blade and anti−scalp cup with blade nuts. Sail part of blade must point toward housing to ensure correct installation. Tighten the blade nuts to 20−37 N·m (15−27 ft−lb).

MAINTENANCE

LUBRICATION

After every 25 operating hours or when season ends, front and rear wheels must be lubricated.

1. Apply two or three drops of light oil on inside and outside of all wheel bolts. Spin wheels to distribute oil into bushings. Wipe up excess oil.

2. Move rear wheel height−of−cut levers to “2” setting. Wipe grease fittings with clean rag (Fig. 29). Install grease gun onto fitting and gently apply two or three pumps of #2 Multi−Purpose Lithium Base Grease.

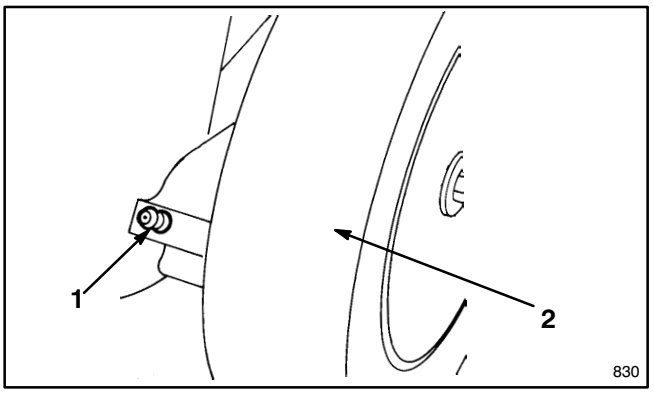

Figure 29

1. Grease fitting **2. Rear wheel**

ADJUSTING BLADE BRAKE

Blade brake adjustment may be necessary if the quality of cut deteriorates, the bagging ability degrades, or the engine rpm is audibly faster than the blade rpm when cutting grass.

1. Stop engine and pull wire off spark plug (Fig. 10).

2. Remove (2) screws securing screen panel to top of mower housing (Fig. 30). Remove panel.

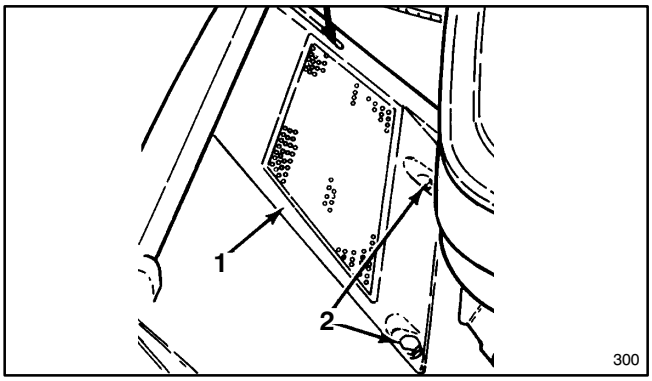

Figure 30

1. Screen panel **2. Screws**

3. Move control bar down and lift up against handle. With control bar against handle, measure the spring length (L) at the front of the spring as shown in Figure 31.

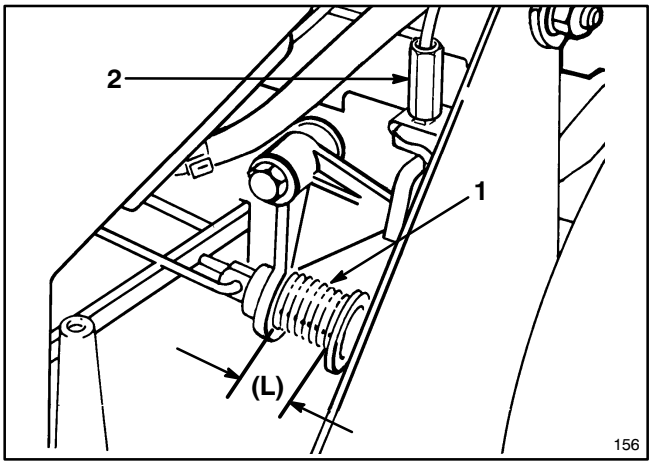

Figure 31

1. Spring **2. Plastic fitting**

4. If spring dimension is greater than 32 mm (1 1/4”) or less than 25 mm (1”), an adjustment is needed.

5. To adjust, rotate plastic fitting on blade brake cable (Fig. 31) until spring dimension is as near as possible to but not less than 25 mm (1”). (See following note.)

Note: If the spring cannot be adjusted to less than 32 mm (1 1/4”) before the end of the plastic fitting is reached, the clutch belt is worn out and should be replaced. After replacing belt, adjust cable as explained in the above procedure.

6. Reinstall screen panel.

MAINTENANCE

CLEANING BLADE BRAKE CLUTCH SHIELDS

The BBC (Blade Brake Clutch) shield and the area behind the panel screen should be cleaned periodically, at the end of each mowing season at minimum, to ensure best performance and to prevent parts degradation.

Clean Behind Panel Screen

1. Stop engine and pull wire off spark plug (Fig. 10).

2. Remove two 13 mm (1/2") self−tapping screws securing panel screen to mower deck and remove panel screen (Fig. 32).

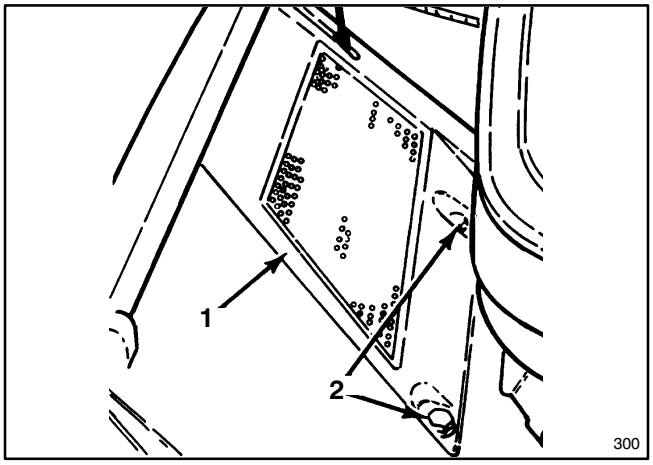

Figure 32

1. Screen panel
2. Screws

3. Remove the vertical panel in front of the transmission by pulling straight up (Fig. 33).

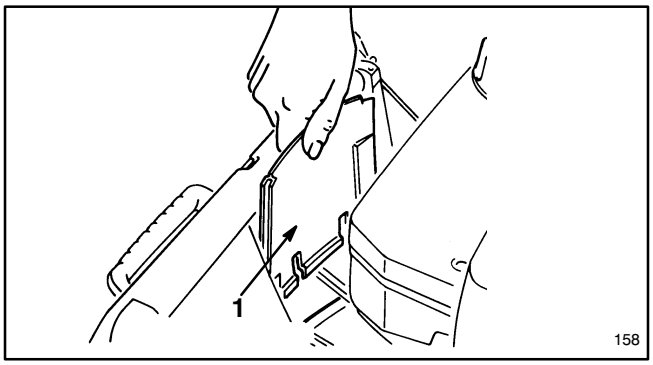

Figure 33

1. Vertical panel

4. Remove any debris that may have accumulated in area behind panel (Fig. 31).

5. Reinstall vertical panel. Secure panel screen to mower deck with two 13 mm (1/2") self−tapping screws.

6. Reinstall spark plug wire.

Cleaning Blade Brake Clutch Shield

1. Stop engine and pull wire off spark plug (Fig. 10).

2. Drain gasoline from fuel tank; refer to Draining Gasoline, page 15.

3. Tip mower on its left side (Fig. 34).

4. Remove two blade nuts, anti−scalp cup, blade, blade spacer, rotating screen, and four bolts securing BBC shield to mower deck (Fig. 34 & 35).

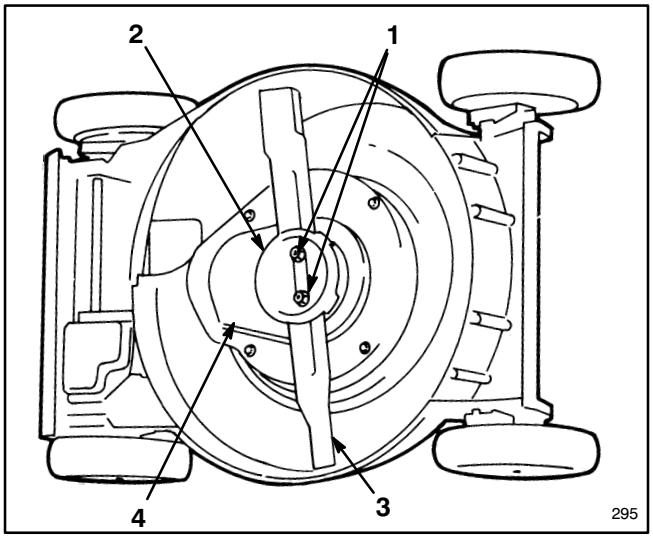

Figure 34

1. Blade nuts
2. Anti−scalp cup
3. Blade
4. BBC shield

5. Brush or scrape debris from inside of shield.

6. Reinstall BBC shield using (4) bolts, rotating screen (outside of flange pointing away from housing), blade spacer, blade, anti−scalp cup, and (2) blade nuts. Sail part of blade must point toward top of mower housing. Tighten blade nuts to 20−37 N·m (15−27 ft−lb).

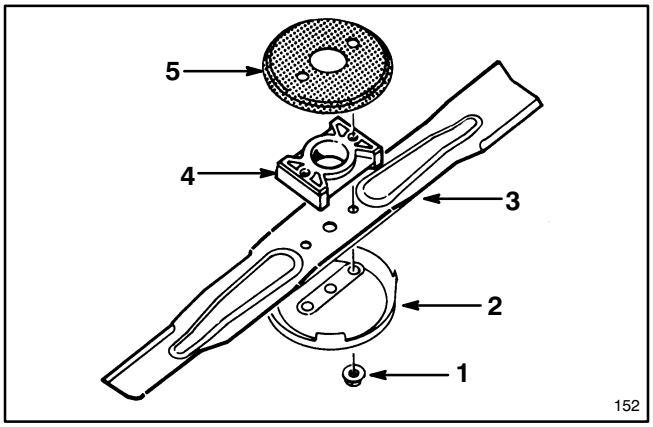

Figure 35

1. Blade nut
2. Anti−scalp cup
3. Blade
4. Blade spacer
5. Rotating screen

7. Reinstall spark plug wire.

MAINTENANCE

CLEANING MOWER HOUSING

To ensure best performance, keep underside of mower housing and inside of discharge area clean.

Washing Method

Whenever the underside of the mower requires cleaning, follow this procedure for washing debris out from underside of deck.

1. Position mower on a flat concrete or asphalt surface near a garden hose.

2. Start the engine.

3. Engage the blade.

4. Hold the running garden hose at handle level and direct water to flow on ground just in front of right rear tire (Fig. 36). The rotating blade will draw water under the housing and wash out clippings. Let the water run for a few minutes or until you no longer see clippings being washed out from under housing.

5. Disengage the blade.

6. Stop the engine.

7. Turn off the garden hose.

8. Restart mower and let it run for a few minutes to dry out moisture on the mower and its components. While the engine is running, engage and disengage the blade and traction drive several times to dry them out.

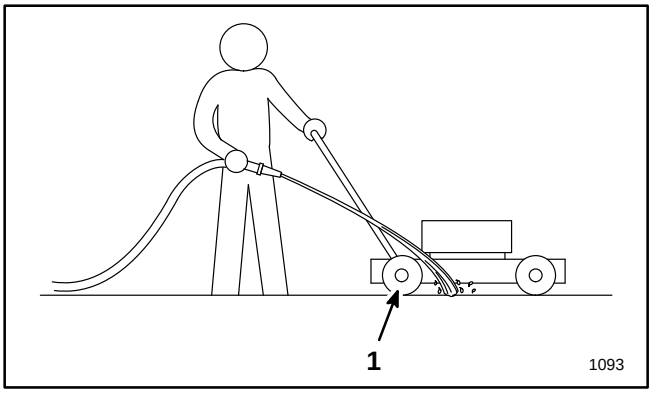

Figure 36

1. Right rear wheel

Scraping Method

1. Stop engine and pull wire off spark plug (Fig. 10).

2. Drain gasoline from fuel tank: refer to Draining Gasoline, page 15.

3. Tip mower on its left side (Fig. 37).

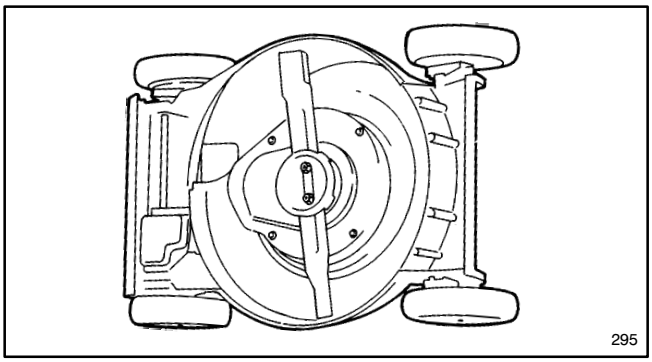

Figure 37

4. Use a hard wood scraper to remove dirt and grass clippings that stick to housing. Avoid burrs and sharp edges.

5. Turn mower upright.

6. Clean discharge door and hinges of grass or debris that may impair operation of door.

7. Refill engine with gas.

8. Reinstall spark plug wire.

PREPARING MOWER FOR STORAGE

1. For long term storage, it is recommended that gasoline be drained from fuel tank or use a fuel additive before storing. To drain gasoline, refer to Draining Gasoline, page 15. After fuel is drained, start engine and let it idle until all fuel is consumed and engine stops. If gasoline is not drained, gum−like varnish deposits will form and cause poor engine operation or even starting problems.

Fuel can be left in gas tank only if a fuel additive, such as Toro's Stabilizer/Conditioner, is added to gasoline and run through engine before storing. Toro's Stabilizer/Conditioner is a petroleum distillate based conditioner/stabilizer. Toro does not recommend stabilizers with an alcohol base, such as ethanol, methanol or isopropyl. Use fuel additive in recommended quantities as specified on container.

Under normal conditions, fuel additives remain effective in fuel for 6-8 months.

2. Drain oil: refer to Changing Crankcase Oil, page 15. After oil is drained, do not fill crankcase with oil until the following steps (3−10) are completed.

3. Remove spark plug and pour 30 ml (2 tablespoons) of SAE 30 oil into hole in cylinder. Pull starter rope slowly to coat inside of cylinder. Install spark plug and tighten to 20 N·m (15 ft−lb). **DO NOT INSTALL WIRE ON SPARK PLUG.**

4. Clean mower housing; refer to Cleaning Mower Housing, page 20.

5. Check condition of blade; refer to Inspecting/Removing/Sharpening Blade, page 17.

MAINTENANCE

6. Tighten all nuts, bolts, and screws.

7. Clean dirt, chaff, grass clippings, and grime from external parts of the engine, shrouding, and top of mower housing.

8. Clean air cleaner; refer to Servicing Air Cleaner, page 14.

9. Lubricate the wheels; refer to Lubrication, page 18.

10. Touch up all rusted or chipped paint surfaces. Toro Re−Kote paint is available from an Authorized TORO Service Dealer.

11. Fill crankcase with oil; refer to Fill Crankcase With Oil, page 7.

12. Store mower in a clean, dry place. Cover mower to keep it clean and protected.

OPTIONAL EQUIPMENT

For special conditions the following accessories may be purchased at your local authorized TORO Service Dealer.

1. Dethatcher Kit, Model No. 59131—Installs in minutes. Front mounted for easy maneuverability. Spring tines loosen thatch for clean vacuuming into grass bag (Fig. 38) and convenient disposal.

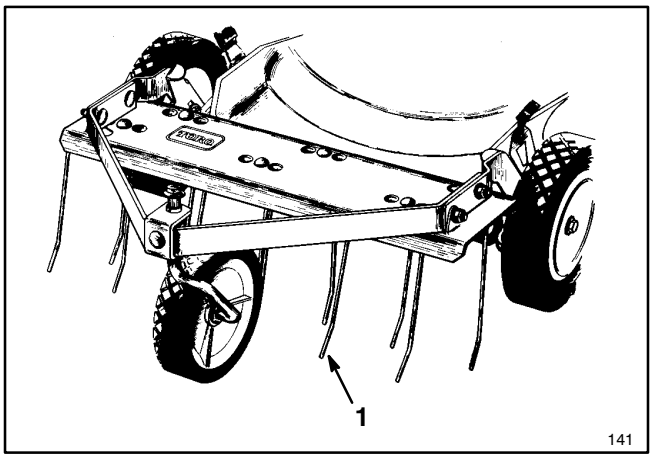

Figure 38

1. Dethatcher attachment

2. Leaf Shredder Kit, Model No. 59180—Installs on underside of mower in minutes without requiring removal of blade. Shreds leaves into small pieces for clean vacuuming into grass bag and convenient disposal (Fig. 39).

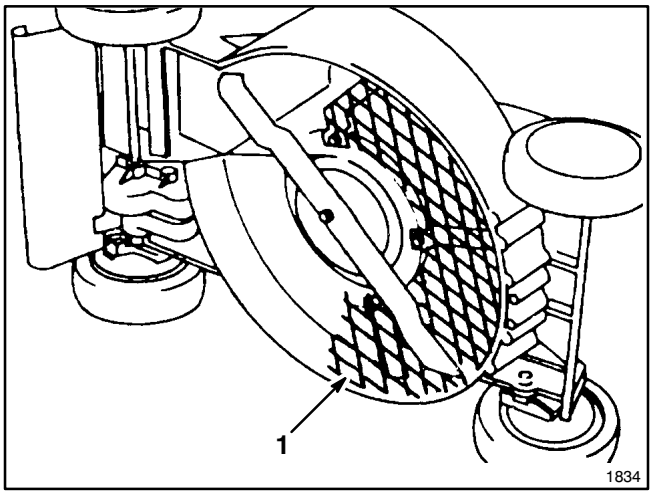

Figure 39

1. Leaf shredder screen

PRODUCT IDENTIFICATION

A model and a serial number decal is located on top right side of mower housing, near the discharge door. Always refer to specific numbers on this decal in correspondence or when replacement parts are needed.

TORO SERVICE SUPPORT

If help − concerning safety, set−up, operation, maintenance, or troubleshooting − is ever needed, contact the local Authorized TORO Service Dealer or Distributor. In addition to skilled service technicians, the dealer and distributor have factory approved accessories and replacement parts. Keep your Toro all TORO. Buy genuine TORO replacement parts and accessories.

THE TORO STARTING GUARANTEE

A Five Year Limited Warranty
On The Toro GTS 200 OHV Engine

What Is Covered?

The Toro Company guarantees that your TORO GTS 200 Engine will start on the first or second pull for five years from the date of purchase—if you provide the routine maintenance it requires—or we will fix it. The cost of parts and labor are included, but you must pay transportation costs.

What Must You Do To Keep The Warranty In Effect?

You must maintain your TORO GTS 200 Engine by following the maintenance schedule detailed in the Operator's Manual, at your expense. You must record this work in the maintenance chart provided and keep your proof of purchase. You will also need to have your TORO GTS 200 engine serviced annually by an Authorized TORO Service Dealer.

How Do You Get Service?

If the starting performance of your TORO GTS 200 Engine should diminish to the point where it will not start in one or two pulls by a normal, able−bodied adult, you should follow the procedures below:

1. Contact any Authorized TORO Service Dealer or the TORO Distributor.
2. He will either instruct you to return the product to him or recommend another Authorized TORO Service outlet which might be more convenient.
3. Take the product, your maintenance records, and proof of purchase to the Service Dealer.

If, for any reason, you are dissatisfied with the Dealer's analysis of your engine's starting condition, or the assistance provided, please contact your TORO Distributor.

What Does This Warranty Not Cover?

This Warranty does not cover:

1. Any repairs on products used commercially.
2. Normal maintenance including replacement of spark plugs, air filter, fuel filter, and carburetor adjustments.
3. Oil change and lubrication.
4. Repairs or adjustments due to:
   a. Failure to follow proper maintenance procedures;
   b. Rotary mower blade striking an object;
   c. Contaminants in the fuel system;
   d. Improper fuel or fuel mixture (consult your Operator's Manual if in doubt);
   e. Failure to follow the proper storage procedures as specified in the Operator's Manual;
   f. Operation misuse, neglect or accidents;
   g. Repairs or attempted repairs by anyone other than an Authorized TORO Service Dealer.
5. Special operational conditions where starting may require more than two pulls, including:
   a. First time starts after extended period of non−use or seasonal storage;
   b. Cool temperature starts such as those found in early spring and late autumn may require an additional pull or two (applies to rotary products only);
   c. Improper starting procedures. If you are having difficulty starting your unit, please check the Operator's Manual to ensure you are using the correct starting procedures. This can save an unnecessary visit to a Service Dealer.

All warranty repairs reimbursable under this warranty must be performed by an Authorized TORO Service Dealer using Toro approved replacement parts.

The above remedy through repair by an Authorized TORO Service Dealer is the purchaser's sole remedy.

GUARANTEED TO START MAINTENANCE RECORD

To keep the starting guarantee in effect, you must perform the following maintenance after every 25 operating hours, more often in dusty and dirty conditions. Follow the procedures in this Operator's Manual and record information on this chart.

Date	**Hours Used**	**Service Air Cleaner**	**Change Oil** Doesn't apply to 2-Cycle	**Lubricate Wheels**	**Check Spark Plug**	**Mower Storage**


TORO®