Form No. 3415-703 Rev B

High Flow Hydraulics Kit

GrandStand® Multi Force Mower

Model No. 78601—Serial No. 400000000 and Up

Installation Instructions

Note: Retain these instructions with the *Operator's Manual* for the machine.

⚠ WARNING

CALIFORNIA
Proposition 65 Warning

This product contains a chemical or chemicals known to the State of California to cause cancer, birth defects, or reproductive harm.

Read this information carefully to learn how to operate and maintain your product properly and to avoid injury and product damage. You are responsible for operating the product properly and safely.

You may contact Toro directly at www.Toro.com for product safety and operation training materials, accessory information, help finding a dealer, or to register your product.

Whenever you need service, genuine Toro parts, or additional information, contact an Authorized Service Dealer or Toro Customer Service and have the model and serial numbers of your product ready. Figure 1 identifies the location of the model and serial numbers on the product. Write the numbers in the space provided.

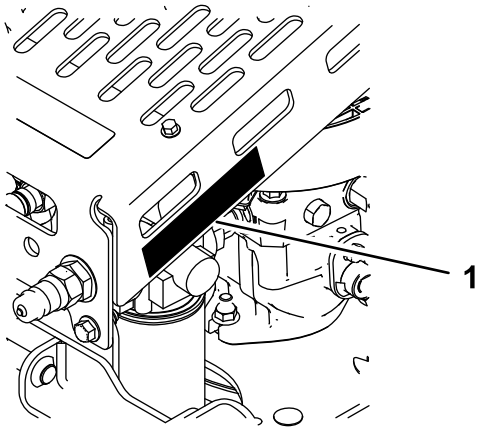

g214500

Figure 1

1. Location of the model and serial numbers

Model No. _____

Serial No. _____

Safety

Safety and Instructional Decals

Safety decals and instructions are easily visible to the operator and are located near any area of potential danger. Replace any decal that is damaged or missing.

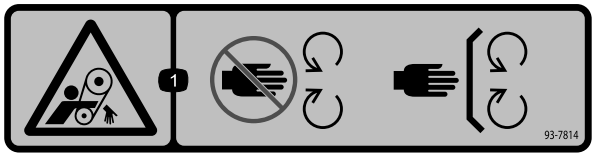

decal93-7814

93-7814

1. Entanglement hazard, belt—stay away from moving parts.



decal115-4212

115-4212

1. Hydraulic-fluid level
2. Read the *Operator's Manual*.
3. Warning—do not touch the hot surface.

© 2017—The Toro® Company
8111 Lyndale Avenue South
Bloomington, MN 55420

Register at www.Toro.com.

Original Instructions (EN)
Printed in the USA
All Rights Reserved

3415-703 B

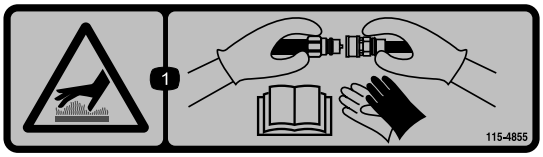

decal115-4855

115-4855

1. Hot surface/burn hazard—wear protective gloves when handling the hydraulic couplers and read the *Operator's Manual* for information on handling hydraulic components.

Installation

Loose Parts

Use the chart below to verify that all parts have been shipped.

Procedure	Description	Qty.	Use
1	No parts required	–	Prepare the machine.
2	High-flow assembly Rear bracket Latch pin Small hairpin cotter Large hairpin cotter Front bracket Carriage bolt (3/8 x 2-3/4 inches) Spacer Nut (3/8 inch) Carriage bolt (3/8 x 1-1/4 inches) Backplate	1 1 1 1 1 1 2 2 3 1 1	Install the high-flow assembly.
3	Belt	1	Route the belt.

Note: Determine the left and right sides of the machine from the normal operating position.

Important: **If you are installing this kit onto the Grandstand Multi Force Snow Machine, you also need to install a clutch onto the machine. Contact your Authorized Service Dealer.**

1

Preparing the Machine

No Parts Required

Procedure

1. Park the machine on a level surface.
2. Disengage the PTO, engage the parking brake, and move the motion-control levers outward to the NEUTRAL-LOCK position.
3. Shut off the engine and remove the key.

2

Installing the High-Flow Assembly

Parts needed for this procedure:

1	High-flow assembly
1	Rear bracket
1	Latch pin
1	Small hairpin cotter
1	Large hairpin cotter
1	Front bracket
2	Carriage bolt (3/8 x 2-3/4 inches)
2	Spacer
3	Nut (3/8 inch)
1	Carriage bolt (3/8 x 1-1/4 inches)
1	Backplate

Procedure

Note: You may need a second person or jackstands to hold up the assembly as you install it to the machine.

1. Remove the mower deck; refer to the *Operator's Manual* for the machine.
2. Remove the 2 bolts (3/8 x 1-1/4 inches) and 2 nuts (3/8 inch) from the right side of the machine (Figure 2).

   Important: **Ensure that the fan shroud inside the frame does not fall onto the transaxle as you remove the hardware.**

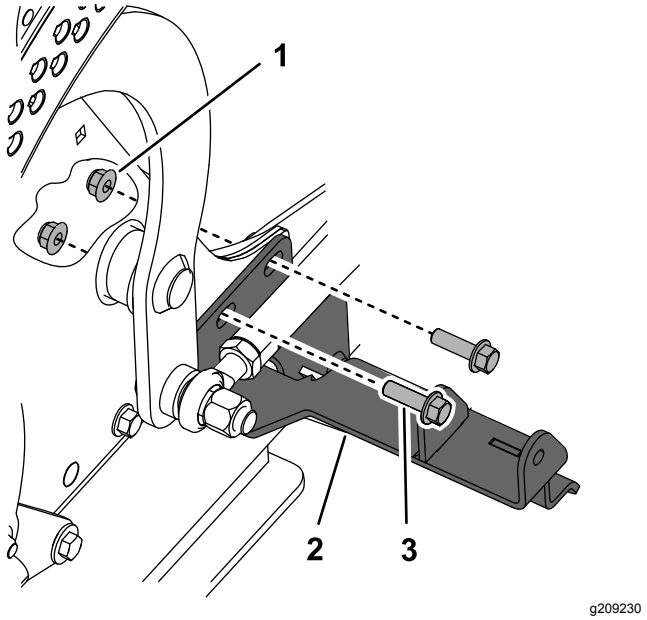

Figure 2

1. Nut (3/8 inch)
2. Rear bracket
3. Bolt (3/8 x 1-1/4 inches)

3. Use the bolts and nuts you just removed to secure the rear bracket from the kit and the fan shroud to the machine frame (Figure 2). Torque to 41 to 49 N·m (30 to 36 ft-lb).
4. Loosely install the front bracket and back plate to the right tube frame, approximately 44 cm (17-1/4 inches) in front of the rear bracket (Figure 3), using 1 carriage bolt (3/8 x 1-1/4 inches), 2 carriage bolts (3/8 x 2-3/4 inches), 2 spacers, and 3 nuts (3/8 inch) as shown in (Figure 4).

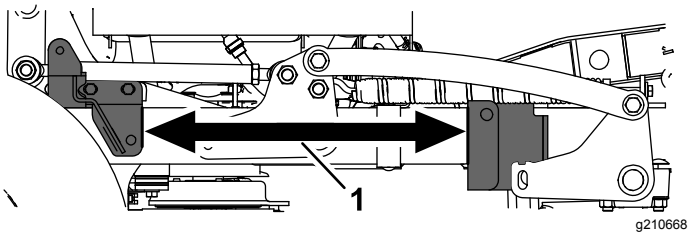

Figure 3

1. 44 cm (17-1/4 inches)

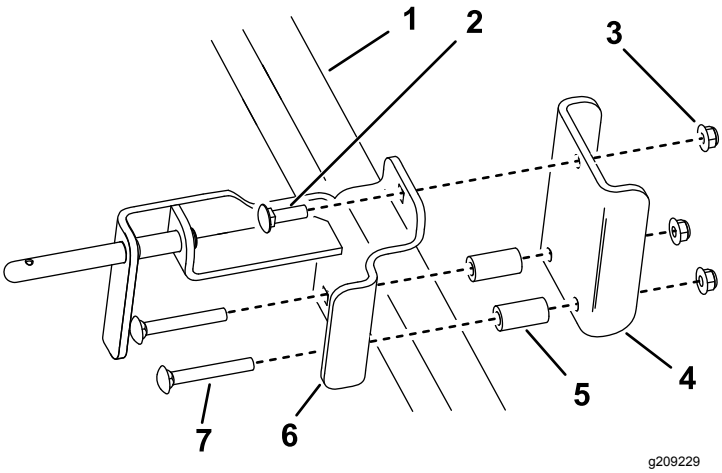

g209229

Figure 4

1. Tube frame
2. Carriage bolt (3/8 x 1-1/4 inches)
3. Nut (3/8 inch)
4. Backplate
5. Spacer
6. Front bracket
7. Carriage bolt (3/8 x 2-3/4 inches)

5. Install the high-flow assembly onto the front and rear brackets, adjusting the front bracket as necessary. Secure the assembly to rear bracket using the small hairpin cotter and latch pin, and secure it on the mount pin of the front bracket using the large hairpin cotter (Figure 5).

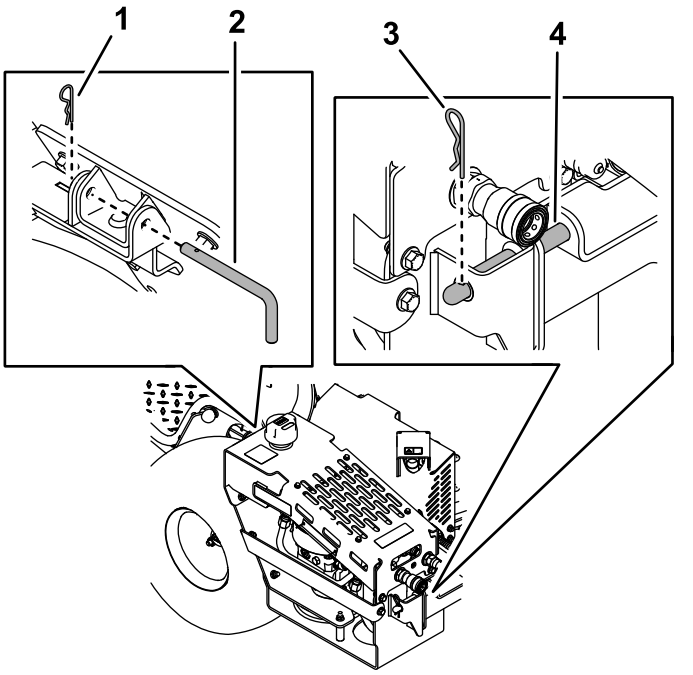

g209503

Figure 5

1. Small hairpin cotter
2. Latch pin
3. Large hairpin cotter
4. Mount pin

6. Torque the bolts on the front and rear brackets to 37 to 45 N·m (27 to 33 ft-lb).

3

Routing the Belt

Parts needed for this procedure:

1	Belt

Procedure

Route the belt around the machine clutch pulley and idler pulley (Figure 6).

Note: The belt comes from the factory already attached to the high-flow pump pulley. Use a ratchet to pull back the idler arm to relieve tension on the spring; you do not need to remove the spring from the idler pulley (Figure 7)

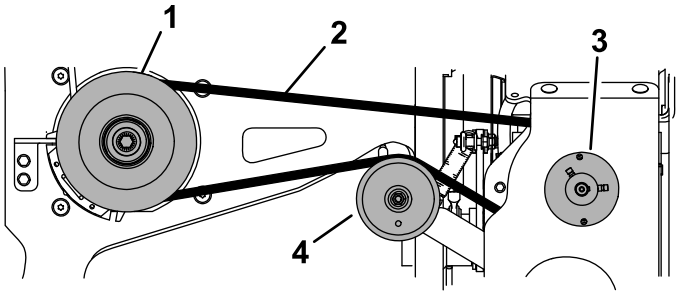

g209259

Figure 6

View below the machine

1. Clutch pulley
2. Belt
3. High-flow pump pulley
4. Idler pulley

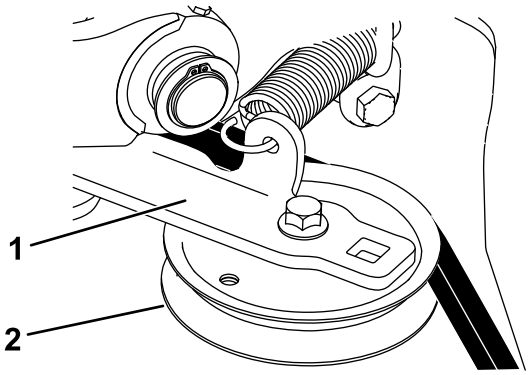

g214199

Figure 7

Top view

1. Idler arm
2. Idler pulley

Operation

Connecting an Attachment

Important: **Do not engage the machine PTO without an attachment connected to the high-flow assembly.**

Important: **Check the hydraulic-fluid level before engaging the attachment; refer to Checking the Hydraulic Fluid (page 6).**

1. Park the machine on a level surface, disengage the PTO, engage the parking brake, and move the motion-control levers outward to the NEUTRAL-LOCK position.
2. Shut off the engine and remove the key.
3. Connect the attachment hoses to the high-flow assembly quick-disconnect couplers (Figure 8).

   Note: Wipe any dirt and contaminants from the couplers before connecting them to the attachment hoses.

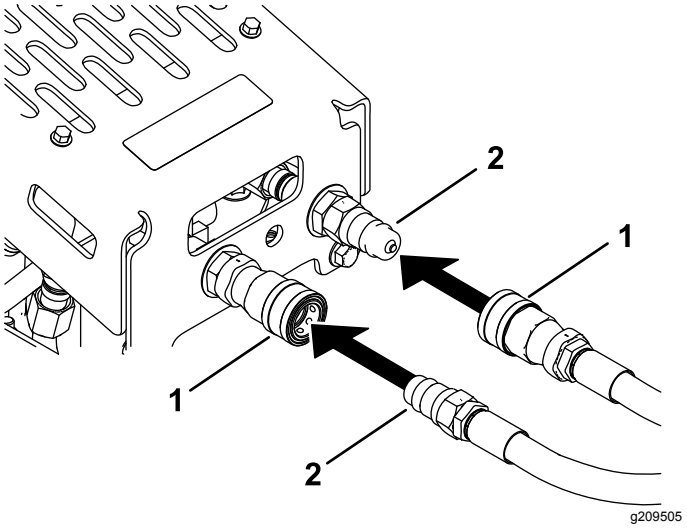

Figure 8

1. Female connector
2. Male connector

4. Start the engine.
5. Move the engine throttle between 1/2 and 3/4 throttle and engage the PTO.

   Note: In cold weather, allow the attachment to run for a few minutes before increasing the throttle to full throttle.
6. Ensure that the attachment runs smoothly prior to operation under normal work conditions.

Removing the Assembly

1. Park the machine on a level surface, disengage the PTO, engage the parking brake, and move the motion-control levers outward to the NEUTRAL-LOCK position.
2. Shut off the engine and remove the key.
3. Disconnect any attachments from the quick-disconnect couplers. Cover the couplers.
4. Remove the belt (Figure 6).
5. Remove the small hairpin cotter and latch pin from the rear of the assembly (Figure 9).

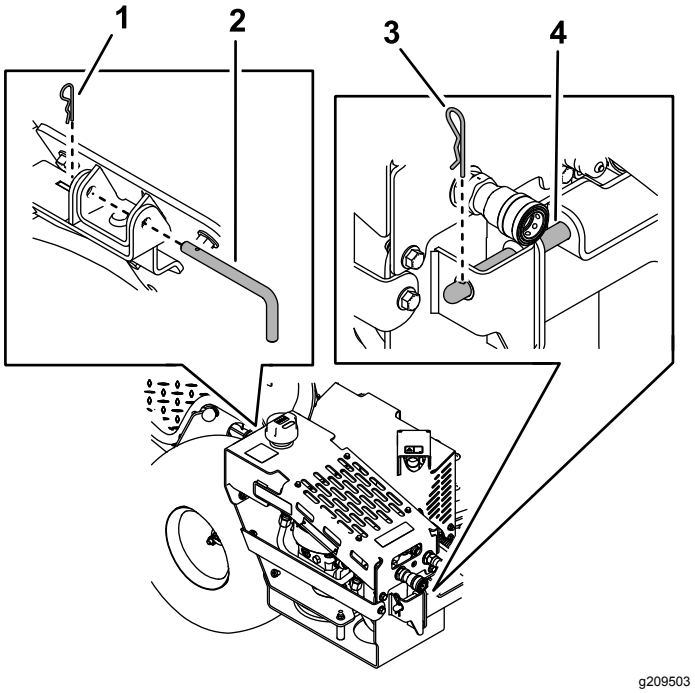

Figure 9

1. Small hairpin cotter
2. Latch pin
3. Large hairpin cotter
4. Mount pin

6. Remove the large hairpin cotter from the mount pin on the front of the assembly (Figure 9).
7. Lift the assembly off the front and rear brackets attached to the machine.

   Note: If you are installing the mower deck, you do not need to remove the brackets.
8. If you will be installing a bagger to the machine, remove the front and rear brackets (see Figure 2 and Figure 4). Install the bolts and nuts from the rear bracket to the secure the fan shroud to the machine.

   Important: **Ensure that the fan shroud inside the frame does not fall onto the transaxle as you remove the hardware.**

Note: To install the assembly on the machine again, refer to 2 Installing the High-Flow Assembly (page 3).

Maintenance

Recommended Maintenance Schedule(s)

Maintenance Service Interval	Maintenance Procedure
After the first 75 hours	• Change the hydraulic fluid, filter, and screen fitting.
Before each use or daily	• Check the hydraulic-fluid level. • Clean debris from the cooler.
Every 100 hours	• Check the belt.
Every 250 hours	• Change the hydraulic fluid, filter, and screen fitting.

Checking the Hydraulic Fluid

Service Interval: Before each use or daily

Hydraulic Fluid Type: Toro® HYPR-OIL™ 500 hydraulic oil

Hydraulic Fluid Capacity: 4.7 L (1.25 US gallons)

1. Park the machine on a level surface, disengage the PTO, engage the parking brake, and move the motion-control levers outward to the NEUTRAL-LOCK position.
2. Shut off the engine and remove the key. Allow the machine to cool.
3. Remove the breather cap and wipe off the dipstick with a clean rag (Figure 10).
4. Insert the dipstick into the tank, but do not thread the cap; then remove it and check the fluid level (Figure 10).

   Note: The fluid level should be between the upper and lower lines on the dipstick.

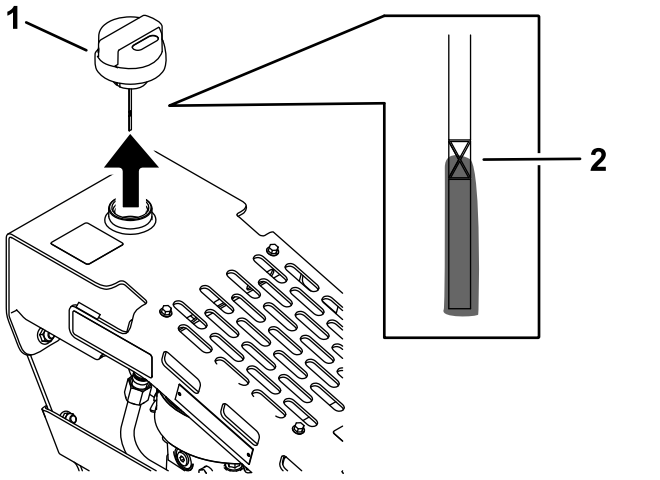

Figure 10

1. Breather cap
2. Fluid level

5. If the fluid level is low, add hydraulic fluid to the tank until the level is between the upper and lower lines on the dipstick (Figure 10).
6. Install the breather cap.

Changing the Hydraulic Fluid, Filter, and Screen Fitting

Service Interval: After the first 75 hours

Every 250 hours/Yearly (whichever comes first)

1. Park the machine on a level surface, disengage the PTO, engage the parking brake, and move the motion-control levers outward to the NEUTRAL-LOCK position.
2. Shut off the engine and remove the key. Allow the machine to cool.

⚠ WARNING

Hot hydraulic fluid can cause severe burns.

Allow the hydraulic fluid to cool before performing any maintenance on the hydraulic system.

3. Place a drain pan under the 90-degree fitting (Figure 11).

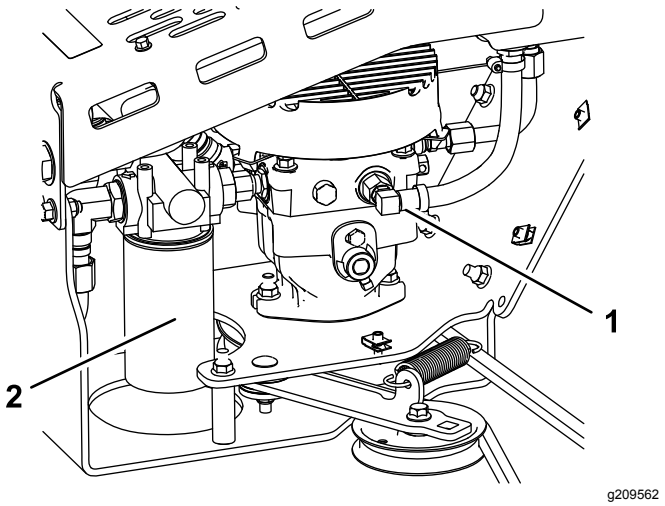

Figure 11

View from the left side of the assembly

1. 90-degree fitting
2. Hydraulic filter

4. Remove the hose from the fitting and allow the fluid to drain.
5. Install the hose to the fitting.
6. Remove the tube and screen fitting from the tank and pump (Figure 12). Discard the screen fitting.

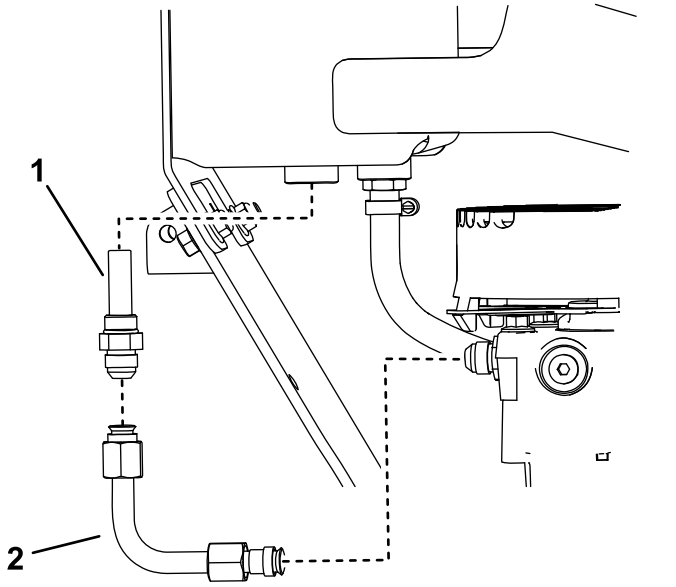

Figure 12

1. Screen fitting
2. Tube

7. Install the new screen fitting to the tank (Figure 12). Torque the fitting to 79 to 98 N·m (58 to 72 ft-lb)
8. Install the tube to the screen fitting and pump (Figure 12).
9. Torque the ends of the tube to 45 to 56 N·m (33 to 41 ft-lb).
10. Remove the hydraulic filter (Figure 11).
11. Lubricate the new filter gasket and fill the filter with hydraulic fluid.
12. Ensure that the filter-mounting area is clean and screw the filter on until the gasket contacts the mounting plate; then tighten the filter an additional 1/10 to 1/4 turn (Figure 11).
13. Fill the hydraulic tank with fluid; refer to Checking the Hydraulic Fluid (page 6).
14. Start the engine and let it run with an attachment connected for about 2 minutes to purge air from the system.
15. Shut off the engine and check for leaks.

⚠ WARNING

Hydraulic fluid escaping under pressure can penetrate skin and cause injury. Fluid injected into the skin must be surgically removed within a few hours by a doctor familiar with this form of injury; otherwise, gangrene may result.

- **Keep your body and hands away from pinhole leaks or nozzles that eject high-pressure hydraulic fluid.**
- **Use cardboard or paper to find hydraulic leaks; never use your hands.**

Cleaning Debris from the Hydraulic Cooler

Service Interval: Before each use or daily

1. Park the machine on a level surface, disengage the PTO, engage the parking brake, and move the motion-control levers outward to the NEUTRAL-LOCK position.
2. Shut off the engine and remove the key.
3. Remove any debris buildup from the hydraulic cooler and pump fan shroud (Figure 13).

   Note: You may use pressurized air to help remove debris that are difficult to reach.

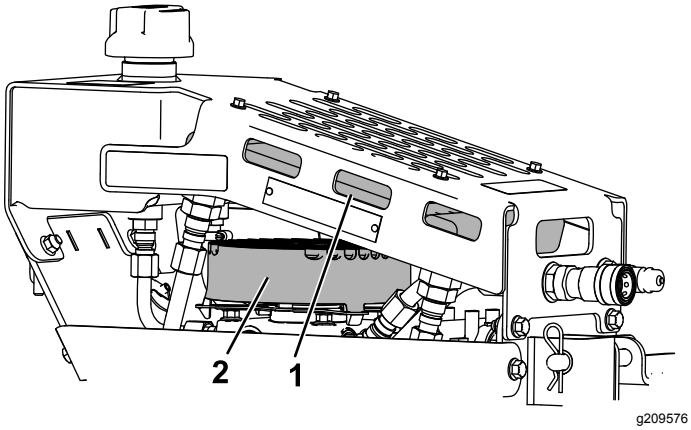

Figure 13

1. Hydraulic cooler
2. Pump fan shroud

Replacing the Belt

Service Interval: Every 100 hours

Signs of a worn belt include squeaking when the belt is rotating, a frayed belt edge, burn marks, and cracks. Replace the deck belt if any of these conditions are evident.

1. Park the machine on a level surface, disengage the PTO, engage the parking brake, and move the motion-control levers outward to the NEUTRAL-LOCK position.
2. Shut off the engine and remove the key.
3. Remove the belt from the pulleys (Figure 14).

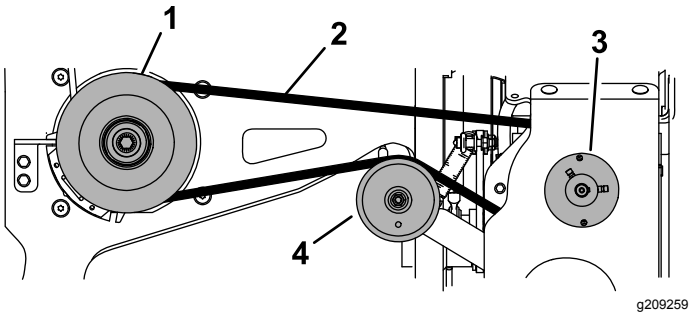

Figure 14

1. Clutch pulley
2. Belt
3. High-flow pump pulley
4. Idler pulley

4. Install the new belt around the machine clutch pulley, idler pulley, and high-flow pump pulley (Figure 14).

   Note: Use care not to cut or twist the belt as you slide it under the pump pulley and frame. You do not need to remove the spring from the idler pulley.

Notes:

Notes:

Notes:

The Toro Warranty

A Limited Warranty (see warranty periods below)

Landscape Contractor Equipment (LCE)

Riding Product

Conditions and Products Covered

The Toro Company and its affiliate, Toro Warranty Company, pursuant to an agreement between them, jointly promise to repair the Toro Products listed below if defective in materials or workmanship.

The following time periods apply from the original date of purchase:

Products	Warranty Period
GrandStand® Mowers	5 years or 1,200 hours[2]
• Engines[3]	3 years
Z Master® 3000 Series Mowers	5 years or 1,200 hours[2]
• Engines[3]	3 years
Z Master® 5000 Series Mowers	5 years or 1,200 hours[2]
• Engines[3]	3 years
Z Master® 6000 Series Mowers	5 years or 1,400 hours[2]
• Engines[3]	3 years
Z Master®7000 Series Mowers	4 years or 1,200 hours[2]
• Engines[3]	2 years
Z Master®8000 Series Mowers	2 years
• Engines[3]	3 years
TITAN HD 1500 Series	4 years or 500 Hours [2]
• Engines	Toro – 4 years or 500 hours
TITAN HD 2000 Series	4 years or 750 Hours [2]
• Engines[3]	Kohler – 3 years
TITAN HD 2500 Series	4 years or 1000 Hours [2]
• Engines[3]	Kawasaki – 3 years
All Mowers	
• Battery	90 days Parts and Labor 1 year Parts only
• Belts and Tires	90 days
• Attachments	1 year

[1]Residential use means use of the product on the same lot as your home. Use at more than one location is considered commercial use and the commercial warranty would apply.

[2]Whichever occurs first.

[3]Some engines used on Toro Products are warranted by the engine manufacturer.

Owner Responsibilities

You must maintain your Toro Product by following the maintenance procedures described in the *Operator's Manual*. Such routine maintenance, whether performed by a dealer or by you, is at your expense.

Instructions for Obtaining Warranty Service

If you think that your Toro Product contains a defect in materials or workmanship, follow this procedure:

1. Contact any Authorized Toro Service Dealer to arrange service at their dealership. To locate a dealer convenient to you, access our web site at www.Toro.com. You may also call the numbers listed in item #3 to use the 24-hour Toro Dealer locator system.
2. Bring the product and your proof of purchase (sales receipt) to the Service Dealer. The dealer will diagnose the problem and determine if it is covered under warranty.
3. If for any reason you are dissatisfied with the Service Dealer's analysis or with the assistance provided, contact us at:

   Toro Warranty Company
   Customer Care Department, RLC Division
   8111 Lyndale Avenue South
   Bloomington, MN 55420-1196
   888-865-5676 (U.S. Customers)
   888-865-5691 (Canada customers)

Items and Conditions Not Covered

There is no other express warranty except for special emission system coverage and engine warranty coverage on some products. This express warranty does not cover the following:

- Cost of regular maintenance service or parts, such as filters, fuel, lubricants, oil changes, spark plugs, air filters, blade sharpening or worn blades, cable/linkage adjustments, or brake and clutch adjustments
- Components failing due to normal wear
- Any product or part which has been altered, misused, neglected, or requires replacement or repair due to accidents or lack of proper maintenance
- Pickup and delivery charges
- Repairs or attempted repairs by anyone other than an Authorized Toro Service Dealer
- Repairs necessary due to failure to follow recommended fuel procedure (consult *Operator's Manual* for more details)
  - Removing contaminants from the fuel system is not covered
  - Use of old fuel (more than one month old) or fuel which contains more than 10% ethanol or more that 15% MTBE
  - Failure to drain the fuel system prior to any period of non-use over one month

General Conditions

All repairs covered by these warranties must be performed by an Authorized Toro Service Dealer using Toro approved replacement parts.

Neither The Toro Company nor Toro Warranty Company is liable for indirect, incidental or consequential damages in connection with the use of the Toro Products covered by this warranty, including any cost or expense of providing substitute equipment or service during reasonable periods of malfunction or non-use pending completion of repairs under this warranty.

All implied warranties of merchantability (that the product is fit for ordinary use) and fitness for use (that the product is fit for a particular purpose) are limited to the duration of the express warranty.

Some states do not allow exclusions of incidental or consequential damages, or limitations on how long an implied warranty lasts, so the above exclusions and limitations may not apply to you.

This warranty gives you specific legal rights, and you may also have other rights which vary from state to state.

Countries Other than the United States or Canada

Customers who have purchased Toro products outside the United States or Canada should contact their Toro Distributor (Dealer) to obtain guarantee policies for your country, province, or state. If for any reason you are dissatisfied with your Distributor's service or have difficulty obtaining guarantee information, contact the Toro importer. If all other remedies fail, you may contact us at Toro Warranty Company.

Australian Consumer Law: Australian customers will find details relating to the Australian Consumer Law either inside the box or at your local Toro Dealer.