FORM NO. 3319−573GB

TORO®

MODEL NO. 20823 − 8900001 & UP
MODEL NO. 20824 − 8900001 & UP

OPERATOR'S MANUAL

48 CM RECYCLER®
MOWER

⚠ SAFETY INSTRUCTIONS

TRAINING

1. Read the instructions carefully. Be familiar with the controls and the proper use of the equipment.

2. Never allow children or people unfamiliar with these instructions to use the lawnmower. Local regulations may restrict the age of the operator.

3. Never mow while people, especially children, or pets are nearby.

4. Keep in mind that the operator or user is responsible for accidents or hazards occurring to other people or their property.

PREPARATION

1. While mowing, always wear substantial footwear and long trousers. Do not operate the equipment when barefoot or wearing open sandals.

2. Thoroughly inspect the area where the equipment is to be used and remove all objects which may be thrown by the machine.

3. WARNING − Petrol is highly flammable.

- Store fuel in containers specifically designed for this purpose.
- Refuel outdoors only and do not smoke while refuelling.
- Add fuel before starting the engine. Never remove the cap of the fuel tank or add petrol while the engine is running or when the engine is hot.
- If petrol is spilled, do not attempt to start the engine but move the machine away from the area of spillage and avoid creating any source of ignition until petrol vapors have dissipated.
- Replace all fuel tanks and container caps securely.

4. Replace faulty silencers.

5. Before using, always visually inspect to see that the blades, blade bolts and cutter assembly are not worn or damaged. Replace worn or damaged blades and bolts in sets to preserve balance.

6. On multi-bladed machines, take care as rotating one blade can cause other blades to rotate.

OPERATION

1. Do not operate the engine in a confined space where dangerous carbon monoxide fumes can collect.

2. Mow only in daylight or in good artificial light.

3. Avoid operating the equipment in wet grass, where feasible.

4. Always be sure of your footing on slopes.

5. Walk, never run.

6. For wheeled rotary machines, mow across the face of slopes, never up and down.

7. Exercise extreme caution when changing direction on slopes.

8. Do not mow excessively steep slopes.

9. Use extreme caution when reversing or pulling the lawnmower towards you.

10. Stop the blade(s) if the lawnmower has to be tilted for transportation when crossing surfaces other than grass, and when transporting the lawnmower to and from the area to be mowed.

11. Never operate the lawnmower with defective guards or shields, or without safety devices, for example deflectors and/or grass catchers, in place.

12. Do not change the engine governor settings or overspeed the engine.

13. Disengage all blade and drive clutches before starting the engine.

14. Start the engine or switch on the motor carefully according to instructions and with feet well away from the blade(s).

15. Do not tilt the lawnmower when starting the engine or switching on the motor, except if the lawnmower has to be tilted for starting. In this case, do not tilt it more than absolutely necessary and lift only the part which is away from the operator.

16. Do not start the engine when standing in front of the discharge chute.

17. Do not put hands or feet near or under rotating parts. Keep clear of the discharge opening at all times.

©The Toro Company−1998
All Rights Reserved

SAFETY INSTRUCTIONS

18. Never pick up or carry a lawnmower while the engine is running.

19. Stop the engine and disconnect the spark plug wire.

- before clearing blockages or unclogging chute;
- before checking, cleaning or working on the lawnmower;
- after striking a foreign object. Inspect the lawnmower for damage and make repairs before restarting and operating the lawnmower;
- if lawnmower starts to vibrate abnormally (check immediately).

20. Stop the engine

- whenever you leave the lawnmower;
- before refuelling.

21. Reduce the throttle setting during engine shut down and, if the engine is provided with a shut-off valve, turn the fuel off at the conclusion of mowing.

22. Go slow when using a trailing seat.

MAINTENANCE AND STORAGE

1. Keep all nuts, bolts and screws tight to be sure the equipment is in safe working condition.

2. Never store the equipment with petrol in the tank inside a building where fumes may reach an open flame or spark.

3. Allow the engine to cool before storing in any enclosure.

4. To reduce the fire hazard, keep the engine, silencer, battery compartment and petrol storage area free of grass, leaves, or excessive grease.

5. Check the grass catcher frequently for wear or deterioration.

6. Replace worn or damaged parts for safety.

7. If the fuel tank has to be drained, this should be done outdoors.

SOUND PRESSURE LEVEL

This unit has an equivalent continuous A-weighted sound pressure at the operator ear of: 85 dB(A), based on measurements of identical machines per ANSI B71.5-1984 procedures.

SOUND POWER LEVEL

This unit has a sound power level of: 96 dB(A)/1 pW, based on measurements of identical machines per Directive 84/538/EEC and amendments.

VIBRATION LEVEL

This unit has a maximum hand-arm vibration level of 4.8 m/s^2, based on measurement of identical machines per ISO 5349 procedures.

SYMBOL GLOSSARY

Safety alert triangle–– symbol within triangle indicates a hazard

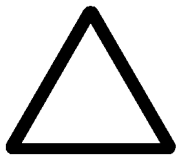

Safety alert symbol



Read operator's manual



Consult technical manual for proper service procedures



Stay a safe distance from the machine

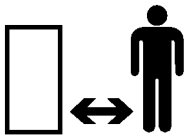

Stay a safe distance from the mower

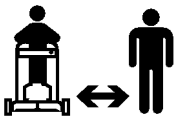

Thrown or flying objects–– Whole body exposure

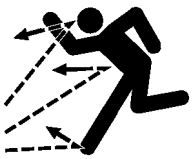

Thrown or flying objects–– Rotary side-mounted mower. Keep deflector shield in place.

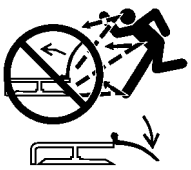

Stop engine before leaving operator position



Do not open or remove safety shields while engine is running

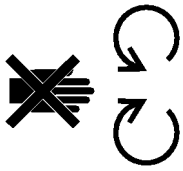

Rotating blade can cut off toes or fingers. Stay clear of mower blade as long as engine is running.



To avoid blade failure when mulching, use blade stiffener when mower is equipped with mulching plug

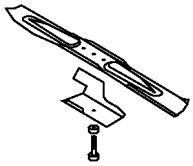

Transmission

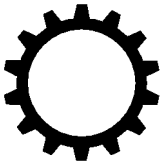

Oil



On/Run



Engage

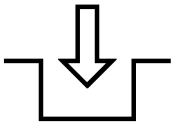

Disengage

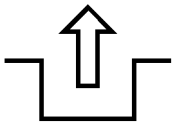

Battery charging condition

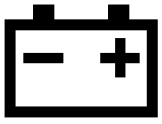

SYMBOL GLOSSARY

Hourmeter/elapsed operating hours

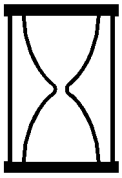

Fast



Slow



Decreasing/increasing



Grease lubrication point



Engine start

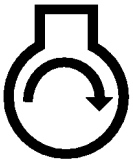

Engine stop



Choke

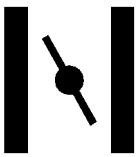

Primer (start aid)



Push primer three times

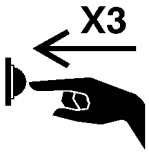

Fuel



Neutral

N

First gear

1

Second gear

2

Third gear

3

Cutting element–– basic symbol



Cutting element–– Height adjustment



Pull rope

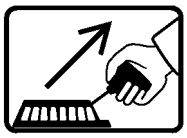

Wheel



Wheel traction

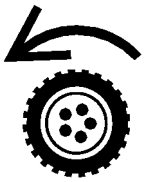

SYMBOL GLOSSARY

Properly dispose of batteries



Insert key into ignition switch



Turn key in ignition switch



Move control



Move control forward

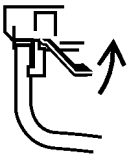

Move control rearward

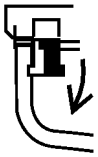

Lower control bar



Raise control bar



Raise/lower control bar



Raise/lower control bar

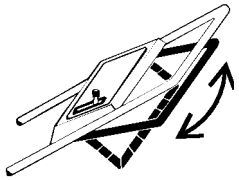

Raise control bar

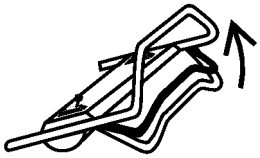

Raise control bar



Lower control bar



TABLE OF CONTENTS

	Page
Set-Up Instructions	6
Before Operating	8
Recycling Tips	9
Operating Instructions	10
Maintenance	13
Servicing Air Cleaner	13
Replacing Spark Plug	13
Draining Gasoline	13
Changing Crankcase Oil	13
Adjusting Throttle	14
Adjusting Traction Wheel Drive	14
Adjusting Brake Cable	14
Inspecting/Removing/Sharpening Blade	15
Lubrication	16
Charging Battery	16
Replacing Fuse	17
Cleaning Mower Housing	17
Preparing Mower For Storage	17
Product Identification	18
Toro Service Support	18
The Toro Starting Guarantee	19
Guaranteed To Start Maintenance Record	20

SET-UP INSTRUCTIONS

INSTALL HANDLE

1. INSTALLING HANDLE—Loosen knobs on mounting brackets (Fig. 1).

2. Position mounting brackets in a vertical position so that holes face up.

3. Slide handle ends into holes in mounting brackets until handle ends are completely seated in brackets (Fig. 1). Make sure throttle cable, electric start cable and traction cable rest on top of left mounting bracket (Fig. 2).

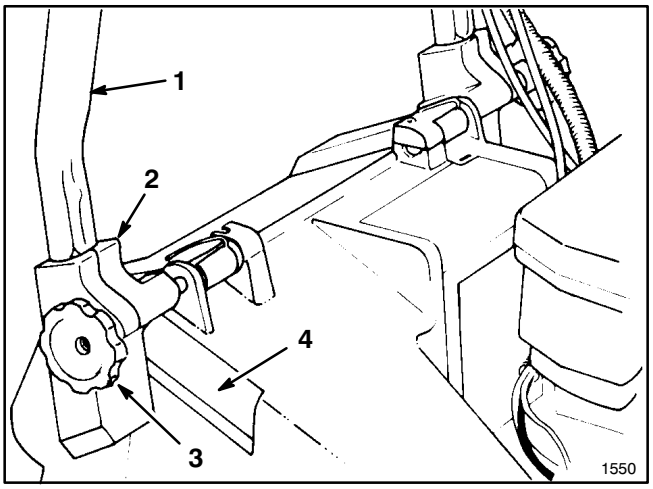

Figure 1

1. **Handle**
2. **Mounting bracket**
3. **Knobs**
4. **Housing pocket**

4. Rotate handle and brackets rearward until brackets fit securely into housing pockets (Fig. 2).

5. Tighten knobs until edges of slots on top of mounting brackets touch.

6. Use cable tie to secure cable(s) to lower side of left hand tube (Fig. 3). Cable tie should be positioned 25 mm (1”) from bend in handle. See Figure 3 for correct cable placement.

Note: Make sure cable(s) do not interfere with the raising or lowering of discharge door.

7. Cut excess length from end of cable tie on lower left handle.

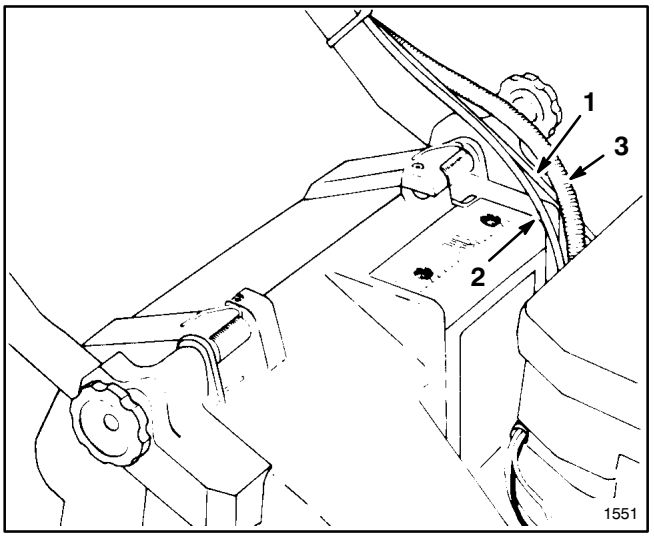

Figure 2

1. **Throttle cable**
2. **Traction cable**
3. **Electric start cable**

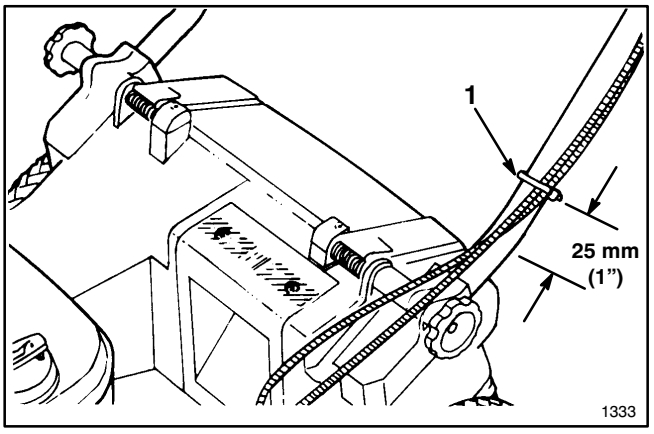

Figure 3

1. **Cable tie**

SET-UP INSTRUCTIONS

INSTALL THE STARTER ROPE

1. Pull the starter rope through the rope guide on the handle (Fig. 4). To make the rope easier to loop, squeeze the control bar on the handle to release the blade brake.

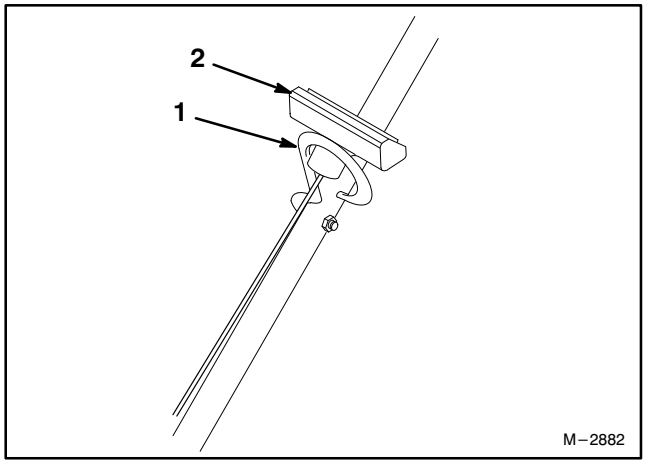

Figure 4

1. Rope guide **2. Starter rope**

INSTALL DISCHARGE TUNNEL PLUG

1. Make sure engine is off.
2. Open discharge door and insert plug into discharge tunnel opening (Fig. 5).
3. Push plug all the way into the discharge tunnel opening.
4. Lower discharge door over plug.

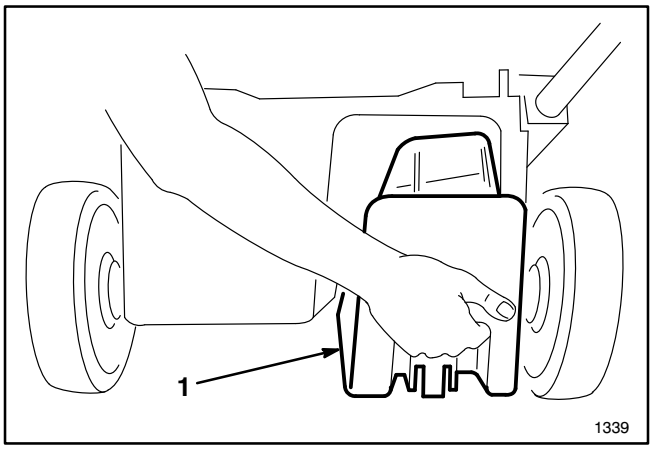

Figure 5

1. Plug

INSTALL BATTERY (electric start model)

1. Refer to Charging Battery, page 16. Slide battery, decal side up, between mounting tabs on back of control panel and connect wires (Fig. 6). Insert key into switch when ready to start engine.

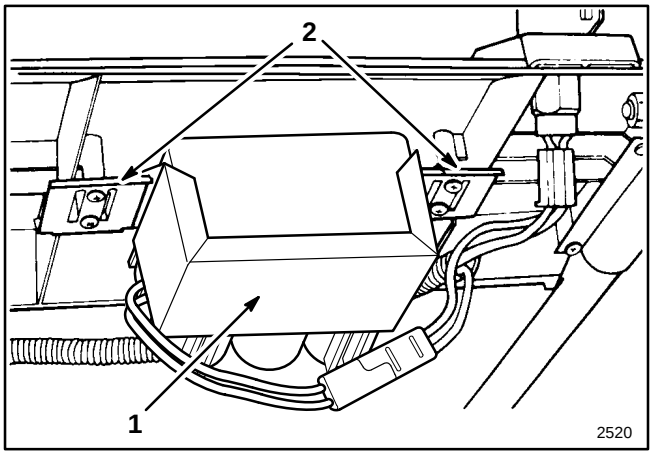

Figure 6

1. Battery **2. Mounting tab**

BEFORE OPERATING

FILL CRANKCASE WITH OIL

Fill crankcase with SAE 30 or 10W30 oil until oil level reaches FULL mark on dipstick as shown in Figure 7. The maximum crankcase capacity is 22 ounces (0.65 liters) of oil. Use any high quality detergent oil having the American Petroleum Institute (API) "service classification" — SF, SG, SH or SJ.

Before each use, ensure oil level is between ADD and FULL marks (Fig. 7). Add oil if level is low.

1. Position mower on level surface and clean around oil dipstick.

2. Remove dipstick by rotating cap counterclockwise 1/4 turn.

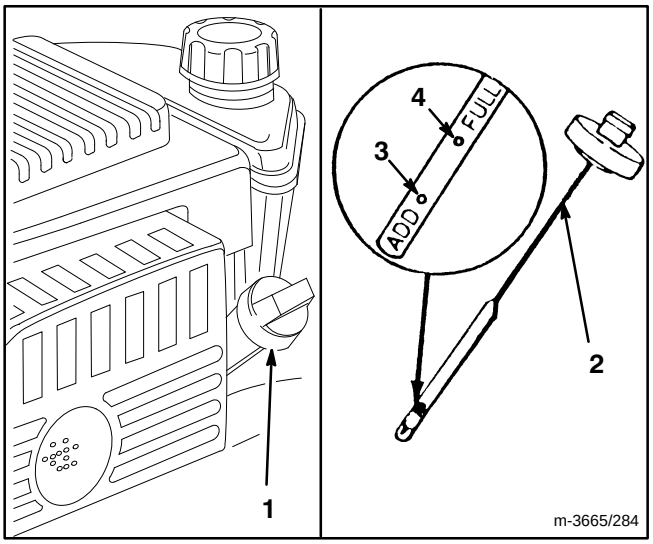

Figure 7

1. Oil fill tube 2. Dipstick 3. ADD mark 4. FULL mark

3. Wipe dipstick and insert it into filler neck. Rotate cap 1/4 turn. Then remove dipstick and check level of oil (Fig. 7). If level is low, add only enough oil to raise level to FULL mark on dipstick. **DO NOT FILL ABOVE FULL MARK BECAUSE ENGINE COULD BE DAMAGED WHEN STARTED. POUR OIL SLOWLY.**

Note: Check oil level each time mower is used or after every 5 hours of mower operation. Initially, change oil after the first 5 hours of operation; thereafter, change oil after every 50 hours of operation. More frequent oil changes are required in dusty or dirty conditions.

4. Insert dipstick into filler neck and rotate cap clockwise 1/4 turn to lock it in place.

FILL FUEL TANK WITH GASOLINE

WARNING

DANGER: Gasoline is extremely flammable and explosive under certain conditions. DO NOT SMOKE when handling fuel and keep fuel far away from open flames and sparks. Never buy more than a 30 day supply of gasoline. Store it in an approved container. Keep gasoline out of reach of children.

Refuel outdoors and only when engine is cold. Do not fill tank full. Fill tank to within 6 to 13 mm (1/4" to 1/2") from top of tank, not into filler neck. This space is for expansion of fuel. Use funnel or spout to prevent spilling. Wipe up any spilled gas.

Note: The Toro Company strongly recommends the use of fresh, clean, **UNLEADED** regular grade gasoline in Toro gasoline powered products. Unleaded gasoline burns cleaner, extends engine life, and promotes good starting by reducing the build−up of combustion chamber deposits. Leaded gasoline can be used if unleaded is not available.

IMPORTANT: DO NOT MIX OIL WITH THE GASOLINE. NEVER USE METHANOL, GASOLINE CONTAINING METHANOL, GASOHOL CONTAINING MORE THAN 10% ETHANOL OR WHITE GAS BECAUSE ENGINE FUEL SYSTEM DAMAGE COULD RESULT.

Toro also recommends that Toro Stabilizer/Conditioner be used regularly in all Toro gasoline powered products during operation and storage seasons. Toro Stabilizer/Conditioner cleans the engine during operation and prevents gum-like varnish deposits from forming in the engine during periods of storage.

Do not use fuel additives other than those manufactured for fuel stabilization during storage. Toro does not recommend stabilizers with an alcohol base such as ethanol, methanol or isopropyl. Stabilizers should not be used to try to enhance the power or performance of machine.

1. Clean around fuel tank cap and remove cap from tank (Fig. 8). Using unleaded gasoline, fill fuel tank to within 6 to 13 mm (1/4 to 1/2 inch) from top of tank, not into filler neck. Do not fill tank full.

2. Reinstall fuel tank cap and wipe up any spilled gasoline.

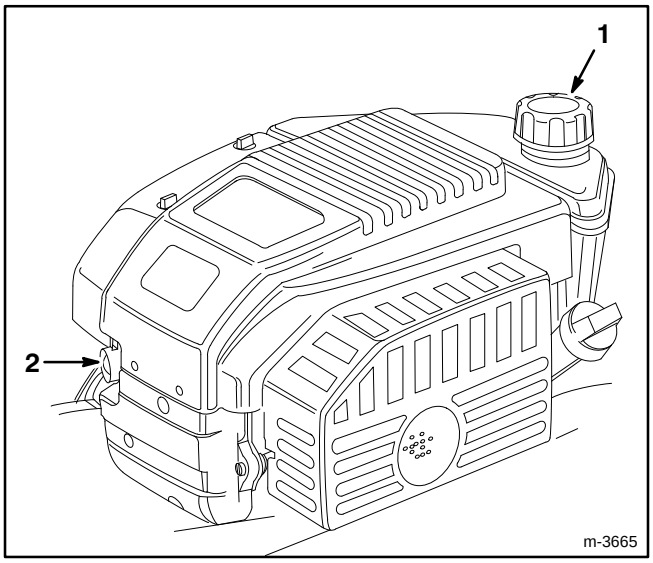

Figure 8

1. Fuel tank cap **2. Primer**

RECYCLING TIPS

GENERAL TIPS

Follow these instructions whether cutting grass or leaves for the best cutting results and lawn appearance:

- Maintain a **sharp blade** throughout the cutting season. Periodically file down nicks on blade.
- **Only mow dry grass or leaves.** Wet grass and leaves tend to clump on yard and may cause mower to plug or engine to stall. They also may be slippery to walk on and could cause you to slip and fall.

WARNING

- **Wet grass or leaves can cause you to slip and contact blade.**
- **Blade contact can seriously injure you.**
- **Mow only in dry conditions.**

- Set engine speed to fastest position. Maximum horsepower provides best cutting results.
- Clean clippings or leaves from underside of mower deck after each mowing.
- Keep engine in good running condition. Cutting and recutting requires more horsepower.
- Clean air filter more frequently. Cutting and recutting stirs up more clippings and dust which clogs the air filter and reduces engine performance.

CUTTING GRASS

- Grass grows at different rates at different times of the year. In the heat of the summer, it is generally best to cut grass at the C, D or E height-of-cut settings. Only about 1/3 of the grass blade should be cut off. Cutting below the C setting is not recommended unless grass is sparse or it is late fall when grass growth begins to slow down.
- When cutting grass over six inches tall, you may want to first mow using the highest height-of-cut setting and a slower walking speed; then mow again at a lower setting for best lawn appearance. If grass is too long and leaves clumps on top of lawn, mower may plug and cause engine to stall.
- Alternate mowing direction. This helps disperse clippings over lawn for even fertilization.

If the finished cut lawn appearance is unsatisfactory, try one or more of the following:

- Sharpen the blade.
- Walk at a slower pace while mowing.
- Raise the height-of-cut setting on your mower.
- Cut grass more frequently.
- Overlap cutting swaths instead of cutting a full swath with each pass.
- Mow across the marginal areas a second time.

RECYCLING TIPS

CUTTING LEAVES

- When cutting is complete, always be sure that 50% of the lawn shows through the cut leaf cover. This may require one or more passes over the leaves.
- Walk at a slower mowing speed if leaves are not being cut up finely enough to be hidden down in the grass.
- If you cut up a lot of oak leaves, you might want to add lime to your grass in the spring. Lime reduces the acidity of oak leaves.

OPERATING INSTRUCTIONS

STARTING, STOPPING AND SELF−PROPELLING

CONTROLS—Throttle, blade control bar, self−propel control bar, recoil starter and key switch (electric start model) are on upper handle (Fig. 9).

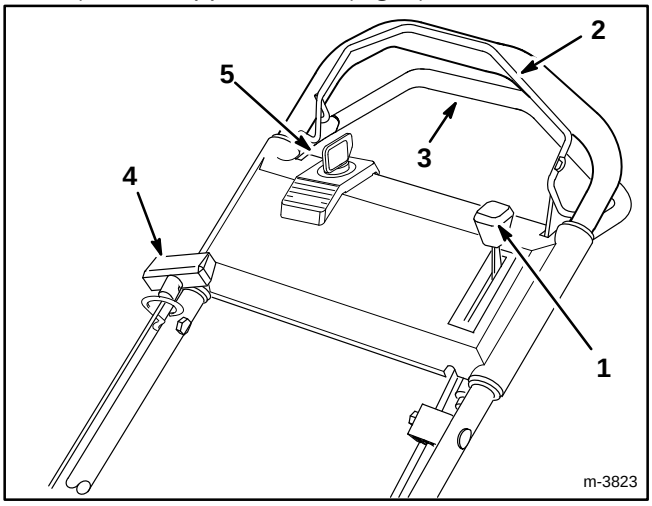

Figure 9

1. **Throttle**
2. **Blade control bar**
3. **Self−propel control bar**
4. **Recoil starter**
* 5. **Key switch**

*** electric start model**

1. Push spark plug wire onto spark plug (Fig. 10).

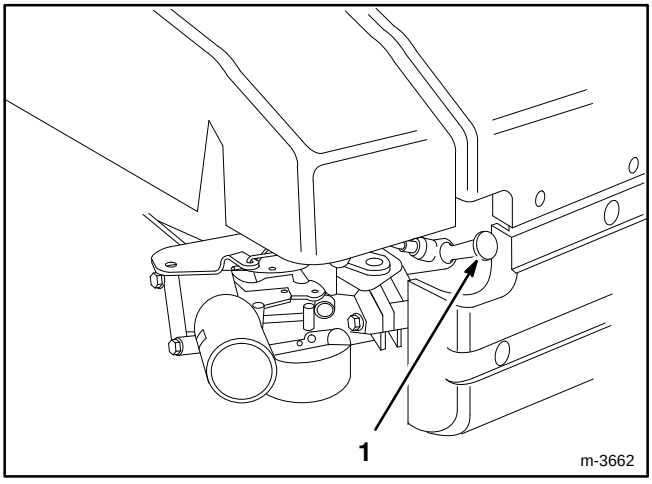

Figure 10

1. **Spark plug wire**

2. Move throttle control to (FAST) position.

3. Push primer three (3) times (Fig. 8). **Wait about two (2) seconds between each push.**

Note: Do not use primer to restart a warm engine after a short shutdown. However, cool weather may require priming to be repeated.

4. KEY−LECTRIC STARTING—Squeeze blade control bar against handle. Turn key to (START) and release when engine begins running. Regulate engine speed as desired. If the battery's charge is too weak to start the engine, use the recoil starter.

Note: If battery is discharged, engine can be started with the recoil starter.

5. MANUAL STARTING—Squeeze blade control bar against handle. Pull recoil starter out until slack in rope is taken up. Then pull vigorously to start the engine. When engine starts, regulate engine speed as desired.

6. WHEEL TRACTION OPERATION—To self−propel the mower, squeeze the self-propel control bar against the handle. To stop the self−propel drive, release the self-propel control bar.

Note: The drive wheels are equipped with freewheeling clutches which enable the mower to be pulled rearward easier when the wheel drive is disengaged. To disengage the clutches, mower must be pushed forward at least 2.5 cm (1") after wheel drive operation has stopped.

7. STOPPING—To stop engine, release blade control bar. Remove key from switch on electric start model. Pull wire off spark plug if mower will be unattended or not used.

USING DISCHARGE TUNNEL PLUG

1. Turn engine off.

2. Open discharge door and insert plug into discharge tunnel opening (Fig. 11).

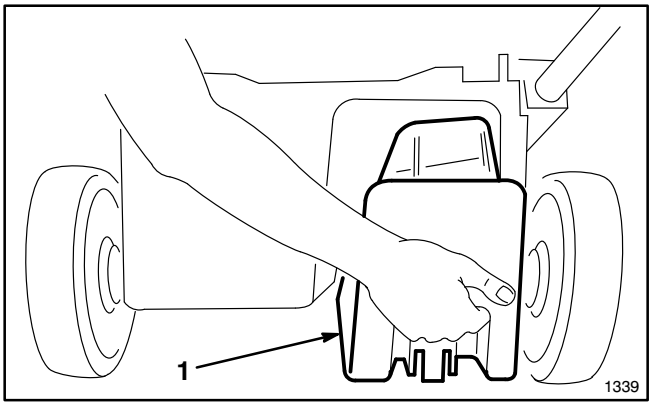

Figure 11

1. **Plug**

OPERATING INSTRUCTIONS

3. Push plug all the way into the discharge tunnel opening.

4. Lower discharge door over plug.

5. To remove the plug, raise discharge door and pull plug out of discharge tunnel.

USING GRASS BAG

Occasionally you may wish to use the grass bag for bagging extra long grass, lush grass or leaves.

1. Stop engine and wait for all parts to stop. Remove key from switch on electric start model.

2. INSTALLING BAG—Raise discharge door, slide bag ramp attached to bag into discharge opening, and hook bag frame onto mounting bracket (Fig. 12). Allow discharge door to rest on top of bag (Fig. 13).

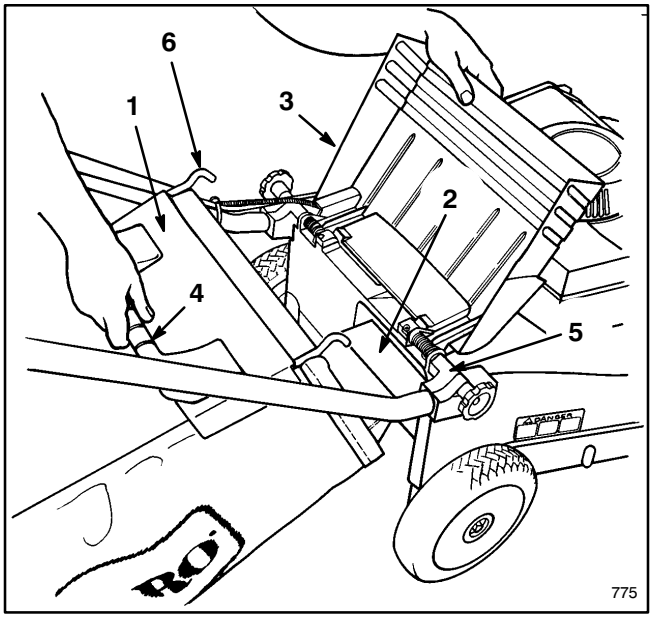

Figure 12

1. **Bag**
2. **Bag ramp**
3. **Discharge door**
4. **Bag handle**
5. **Mounting bracket**
6. **Bag frame hook**

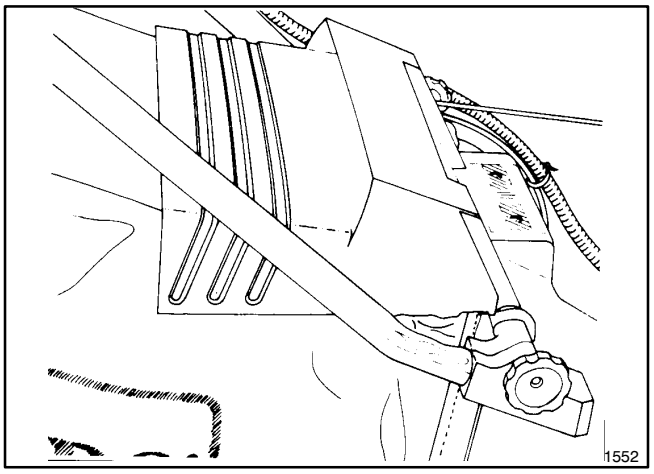

Figure 13

3. REMOVING BAG—**Stop engine and wait for all moving parts to stop.** For protection, always keep hands and feet away from mower housing while engine is running. Raise discharge door. While holding discharge door up, grasp handle on grass bag and lift bag off mower. Allow discharge door to close.

Note: When removing the grass bag, the bag ramp scoops out any clippings that may be plugging the discharge opening. If the discharge opening remains plugged, pull wire off spark plug and clear all clippings from the mower.

4. EMPTYING BAG—Grasp bag frame handle and rear of grass bag. Gradually tip bag forward to empty clippings.

DANGER

- **Grass clippings and other objects can be thrown from an open discharge tunnel.**
- **Objects thrown with enough force could cause serious personal injury or death to operator or bystander.**
- **Never open door on discharge tunnel when engine is running unless the grass bag is securely installed.**

DANGER

- **A worn grass bag could allow small stones and other similar debris to be thrown in operator's or bystander's direction.**
- **Thrown objects can cause serious personal injury or death to operator or bystanders.**
- **Check the grass bag frequently. If it is damaged, install a new genuine TORO replacement bag. that has this or a similar warning.**

DANGER

- **Thrown objects may result if discharge door does not close completely.**
- **Thrown objects can cause serious personal injury or death.**
- **If discharge door cannot be closed because grass clippings clog discharge area, stop engine and gently move discharge door handle back and forth until door can be closed completely. Do not force discharge door closed because door or handle may be damaged. If door still cannot be closed, remove obstruction with a stick, not your hand.**

OPERATING INSTRUCTIONS

SETTING HEIGHT−OF−CUT

Toro's exclusive SmartWheel® provides a simple method for determining the proper cutting height.

The SmartWheel has two cutting scales — SPARSE/NORMAL and LUSH — to ensure the best height-of-cut setting in any mowing condition. Use the SPARSE/NORMAL scale during the warm summer season for the majority of your mowing. The LUSH scale is for thick, moist, succulent grass that grows most often in the spring.

In general, it is recommended that:

- Grass length should usually be cut at the C, D or E settings or **MAINTAINED** at two to three inches in height.
- Cutting below the C setting is not recommended unless grass is sparse or it is late fall when grass growth begins to slow down. When cutting long grass, you may need to use a higher height-of-cut setting and a slower walking speed; then re-cut the grass at a more normal setting. If grass is too long and leaves clumps on top of lawn, mower may plug and cause engine to stall.
- The SmartWheel calculates the proper setting to ensure that no more than 1/3 of the grass blade is cut off.

1. Before starting the engine and beginning to mow, push the mower into the grass. Stop when the letters on the SmartWheel design on the rear left wheel are upright (Fig. 14).

2. Using the coded SmartWheel design (Fig. 14), compare the tips of the grass blades to the letters on the wheel. Whichever letter the tips of the grass blades correspond with is the proper cutting height.

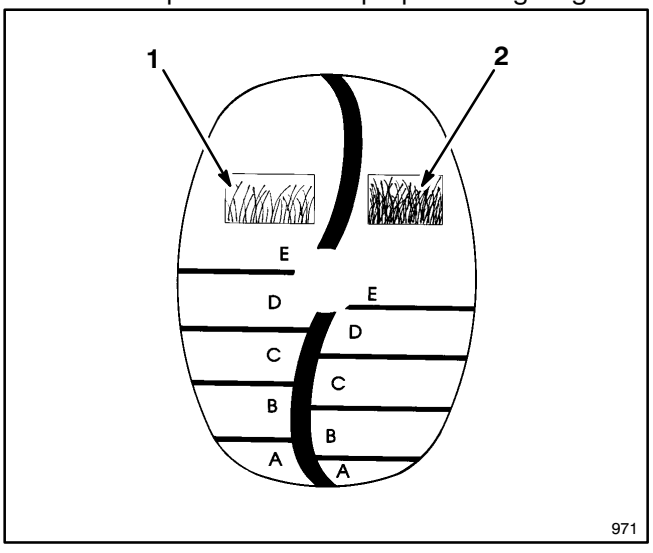

Figure 14

1. **Sparse/normal grass cutting scale**
2. **Lush grass cutting scale**

3. Use one or two fingers to squeeze the height-of-cut adjustment lever (Fig. 15).

To raise the wheel height, squeeze the lever to unlock the height-of-cut and pull up on the mower. Release lever when desired height is found. To lower the height, squeeze the height-of-cut adjustment lever and push down on the mower while rolling the mower forward. Use the pointer on the link rod to locate the correct setting. All wheels automatically adjust to the same height-of-cut setting.

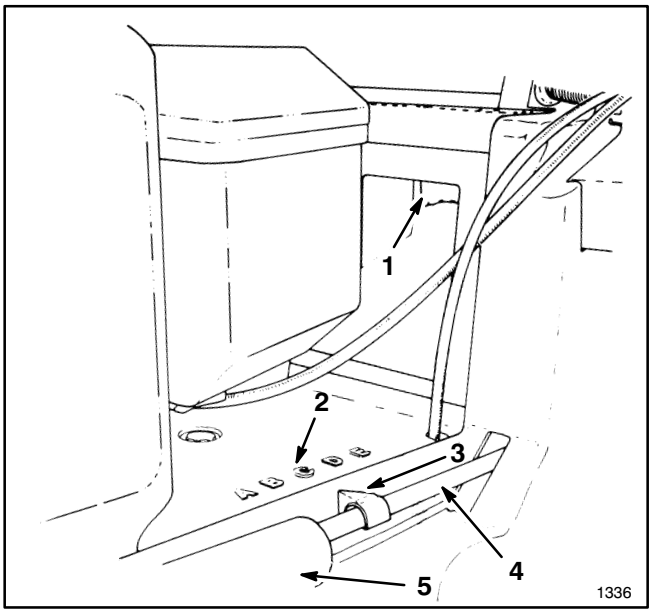

Figure 15

1. **Height−of−cut adjustment lever**
2. **Height settings**
3. **Pointer**
4. **Link rod**
5. **Spring cover**

4. Make sure the height adjustment lever is locked into a height setting before beginning operation. The height should not change when the height-of-cut is locked.

MAINTENANCE

⚠ CAUTION

- **Engine could be started accidentally.**
- **Accidental starting of engine could cause serious injury to operator or bystanders.**
- **Pull wire off spark plug before performing any maintenance or adjustments.**

SERVICING AIR CLEANER

Normally, clean air cleaner pre-cleaner after every 25 operating hours or every season. Clean the paper cartridge after every 100 hours or every season. More frequent cleaning is required when mower is operated in dusty or dirty conditions. Replace air cleaner parts, if very dirty.

1. Stop engine and pull wire off spark plug (Fig. 10). Remove key from switch on electric start model.

2. Remove two (2) knobs securing air cleaner cover to engine (Fig. 16).

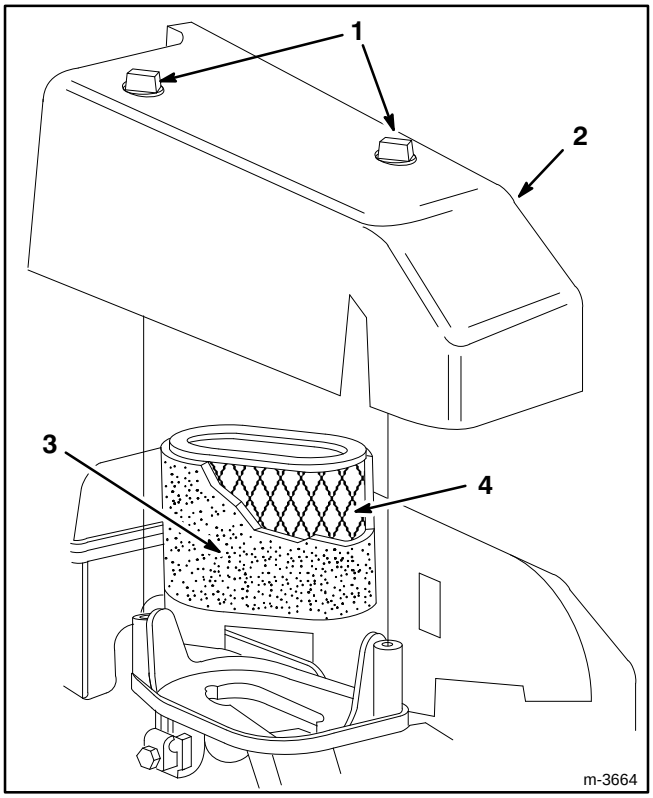

Figure 16

1. Knob	**3. Foam pre-cleaner**
2 Cover	**4 Paper cartridge**

3. Lift cover off. Clean cover thoroughly.

4. Carefully remove pre-cleaner. If pre-cleaner is dirty, carefully wash it in a solution of liquid soap and warm water. Rinse in clear water. Allow to dry thoroughly before using.

5. If paper cartridge is dirty, clean the paper filter by tapping it **gently** on a flat surface. If very dirty, replace cartridge.

IMPORTANT: Do not oil pre−cleaner or paper cartridge. Do not use pressurized air to clean paper cartridge.

6. Reinstall pre-cleaner over paper cartridge. Reinstall air cleaner cover and tighten securely in place with two (2) knobs.

IMPORTANT: Do not operate engine without air cleaner element otherwise extreme engine wear and damage will likely result.

REPLACING SPARK PLUG

Use a CHAMPION RC12YC spark plug or equivalent. Correct air gap is 0.5 mm (0.020”). Remove plug after every 100 operating hours or every season and check its condition.

1. Stop engine and pull wire off spark plug (Fig. 10).

2. Clean around spark plug and remove plug from cylinder head.

IMPORTANT: Replace a cracked, fouled, or dirty spark plug. Do not sand blast, scrape, or clean electrodes because engine damage could result from grit entering cylinder.

3. Set air gap at 0.5 mm (0.020”) (Fig. 17). Install correctly gapped spark plug and gasket seal. Tighten plug firmly to 19 N·m (14 ft−lb).

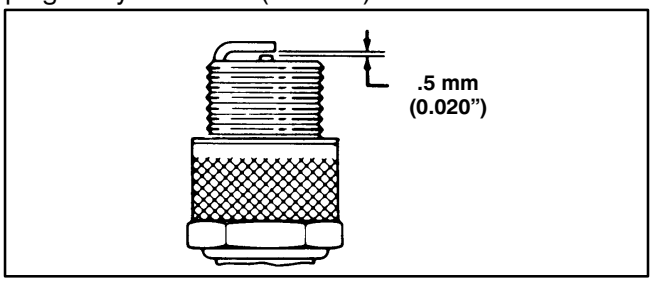

Figure 17

DRAINING GASOLINE

1. Stop engine and wait for engine to cool. Pull wire off spark plug (Fig. 10). Remove key from switch on electric start model.

Note: Drain gasoline from a cold engine only.

2. Remove cap from fuel tank and use pump−type syphon to drain fuel into clean gas can.

Note: This is the only procedure recommended for draining fuel.

CHANGING CRANKCASE OIL

Change oil after the first 5 operating hours and after every 50 hours thereafter. Since warm oil drains better and carries more contaminants than cold, run engine for several minutes before draining oil.

1. Drain gasoline. Refer to Draining Gasoline section.

2. Run engine until it dies. Try starting engine once more to make sure gas is out of carburetor.

3. Pull wire off spark plug (Fig. 10). Remove key from switch on electric start model.

4. If grass bag is installed on mower, close door in mower housing and remove bag.

5. Remove dipstick from oil fill tube and place a drain pan next to left side of mower.

6. Tip mower on its left side, allowing oil to drain into drain pan (Fig. 18).

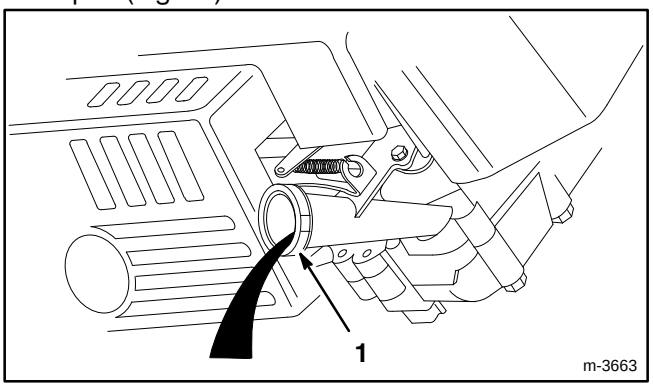

Figure 18

1. **Oil fill tube**

7. When oil is drained, return mower to upright position and add fresh oil to engine. Refer to Fill Crankcase With Oil, page 8.

8. Reconnect spark plug wire.

ADJUSTING THROTTLE

Throttle control adjustment may be required if engine does not start or stop. Whenever a new throttle control cable is installed, the throttle must be adjusted.

1. Stop engine and pull wire off spark plug (Fig. 10). Remove key from switch on electric start model.

2. Loosen cable clamp screw until throttle cable slides (Fig. 19).

3. Move governor control lever, throttle cable and casing in direction of arrow as far as possible (Fig. 19).

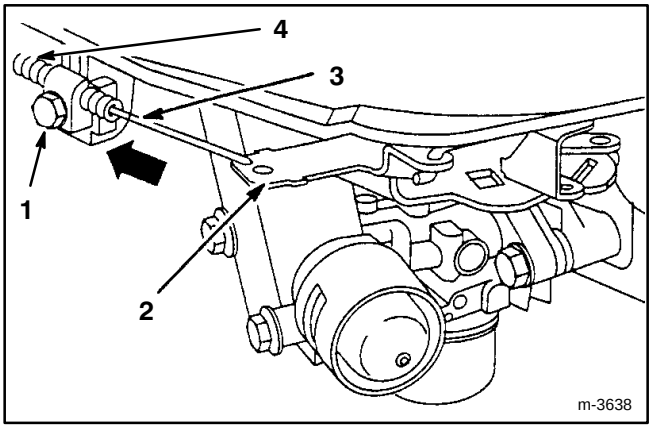

Figure 19

1. **Cable clamp screw**
2. **Governor control lever**
3. **Throttle cable**
4. **Casing**

4. Move throttle control to (FAST position).

5. Tighten cable clamp screw to lock adjustment in place.

ADJUSTING WHEEL TRACTION DRIVE

If mower does not self−propel or self-propels when control bar is released, adjust wheel drive control knob under control panel (Fig. 20).

1. Start the mower.

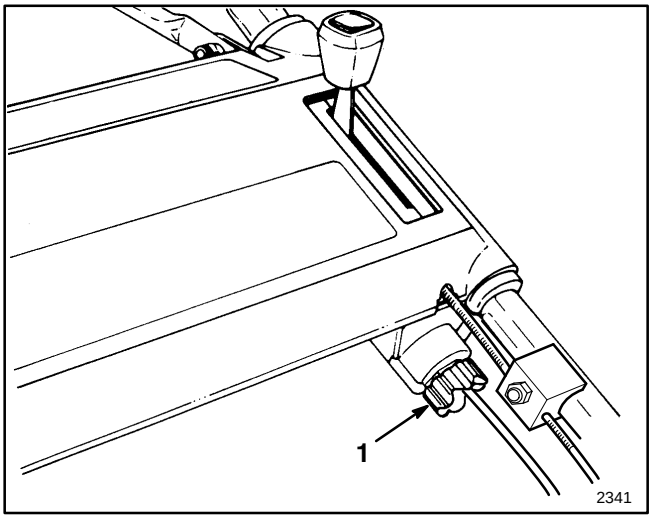

Figure 20

1. **Wheel drive control knob**

2. To adjust traction, hold self-propelled control bar (Fig. 9) against handle and rotate adjustment knob clockwise or counterclockwise until rear drive wheels begin to turn, then rotate adjustment knob approximately 1/2 turn counterclockwise.

If drive wheels lose traction while mowing inclines, rotate adjustment knob counterclockwise until rear wheels drive.

3. If loss of traction or improper engagement still occurs after readjustment, repeat step 2 until properly adjusted.

ADJUSTING BRAKE CABLE

Whenever a new blade brake cable assembly is installed, an adjustment is required.

1. Stop the engine. Pull the wire off the spark plug (Fig. 10). Remove key from switch on electric start model.

2. CHECK ADJUSTMENT (Fig. 21)−Move the blade control bar toward the handle until the slack in the wire is removed. The gap between the blade control bar and the handle must be 1/8”.

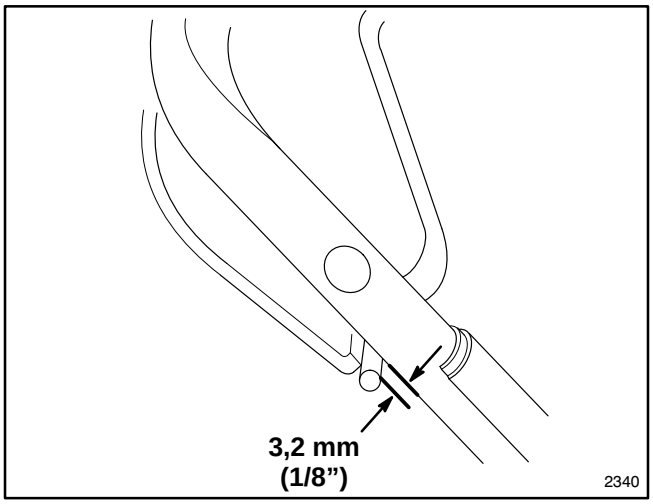

Figure 21

3. ADJUST CABLE (Fig. 22) – Loosen the nut on the cable bracket. Insert a 1/8" object between the brake control bar and handle. Pull down on the cable conduit until all slack is removed from the wire. Then tighten the nut on cable bracket.

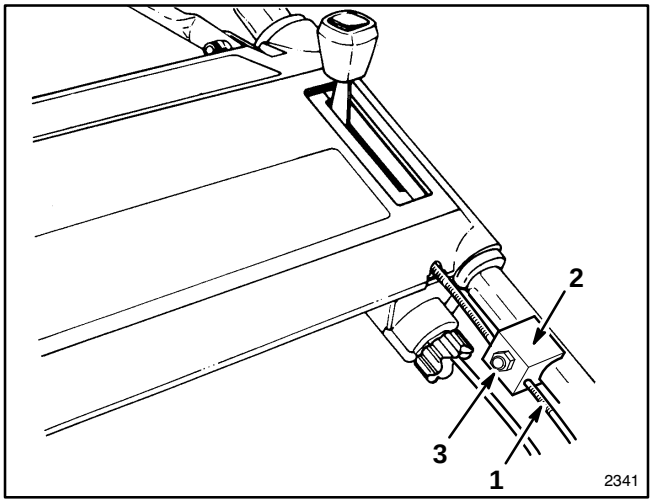

Figure 22

1. **Cable conduit**
2. **Cable bracket**
3. **Nut**

INSPECTING/REMOVING/SHARPENING BLADE

1. Run engine until it dies. Try starting engine once more to make sure gas is out of carburetor.

2. Pull wire off spark plug (Fig. 10).

3. Tip mower on its left side (Fig. 23). Avoid rotating blade as starting problems may result.

4. INSPECTING BLADE—Carefully examine blade for sharpness and wear, especially where flat and curved parts meet (Fig. 24A). Since sand and abrasive material can wear away the metal that connects the flat and curved parts of the blade, check blade before using the mower. If a slot or wear is noticed, (Fig. 24B & C), replace blade with a new TORO blade. Refer to step 5.

Note: For optimum performance, install a new TORO blade before cutting season begins. During the year, file down small nicks to maintain the cutting edge.

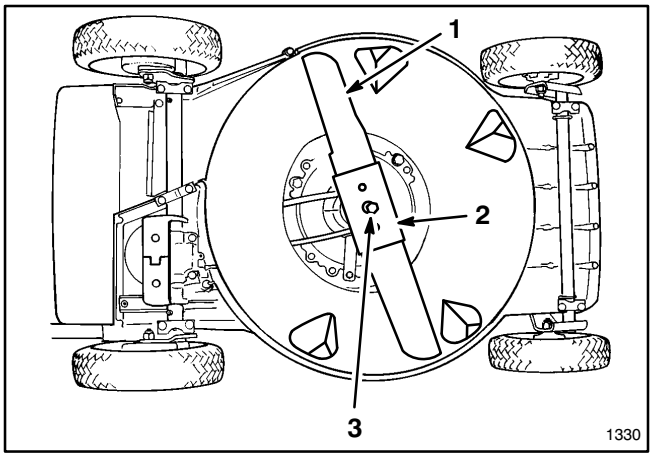

Figure 23

1. **Blade**
2. **Blade stiffener**
3. **Blade bolt and lock washer**

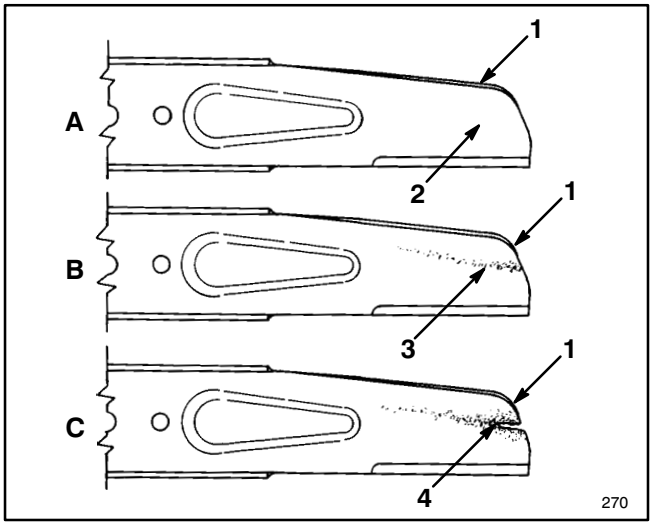

Figure 24

1. **Sail**
2. **Flat part of blade**
3. **Wear**
4. **Slot formed**

5. REMOVING BLADE—Grasp end of blade using a rag or thickly padded glove. Remove blade bolt, lock washer, blade and blade stiffener (Fig. 23).

DANGER

- **A worn or damaged blade could break and a piece of blade could be thrown into operator's or bystander's area.**
- **A thrown piece of blade could cause serious personal injury or death to operator or bystanders.**
- **Inspect blade periodically for wear or damage.**
- **Replace a worn or damaged blade.**

MAINTENANCE

⚠ WARNING

- **Operating mower without stiffener in place could cause blade to flex, bend or break.**
- **A broken blade could cause serious injury or death to operator or bystanders.**
- **Do not operate mower without stiffener.**

6. SHARPENING BLADE—Using a file, sharpen top side of blade (side facing top of mower housing) and maintain original cutting angle (Fig. 25). The blade remains balanced if the same amount of material is removed from both cutting edges.

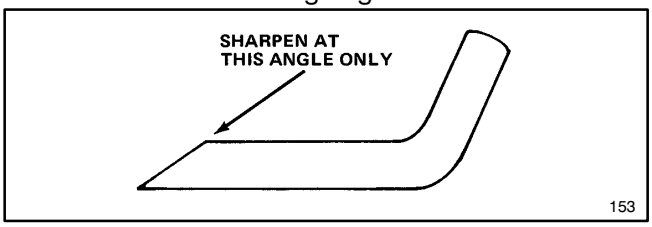

Figure 25

IMPORTANT: Check balance of blade by putting it on a blade balancer. An inexpensive balancer can be purchased at a hardware store. A balanced blade stays in a horizontal position and an unbalanced blade settles to the heavy side. If blade is not balanced, file more metal off cutting edge on heavy end of blade.

7. Install sharp, balanced TORO blade, blade stiffener, lock washer and blade bolt. Sail part of blade must point toward top of mower housing to ensure correct installation. Tighten blade bolt to 68 N·m (50 ft−lb).

LUBRICATION

After every 25 operating hours or when season ends, front and rear wheels must be lubricated.

1. Apply one to two drops of light oil on inside and outside of all wheel bolts. Spin wheels to distribute oil into bushings. Wipe up excess oil.

2. Tip the mower on its left side. Wipe grease fittings with clean rag (Fig. 26). Install grease gun onto fitting and gently apply one or two pumps of #2 Multi−Purpose Lithium Base Grease.

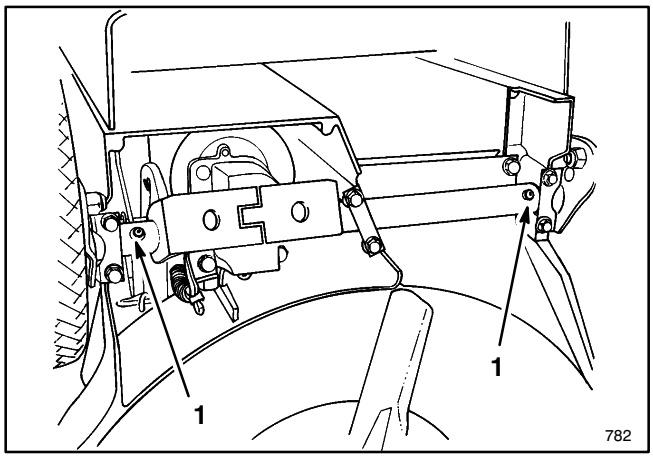

Figure 26

1. Grease fitting

CHARGING BATTERY (electric start model)

Although a new battery is not fully charged, a partial charge of 4 hours provides enough energy for several starts. However, a new battery must be charged for 72 continuous hours to assure full charge. Also charge battery for 72 hours when mower is stored and in the spring. During normal operation, charge battery for 48 hours once every month or as needed.

1. Stop engine and disconnect wire harness from battery terminal (Fig. 27).

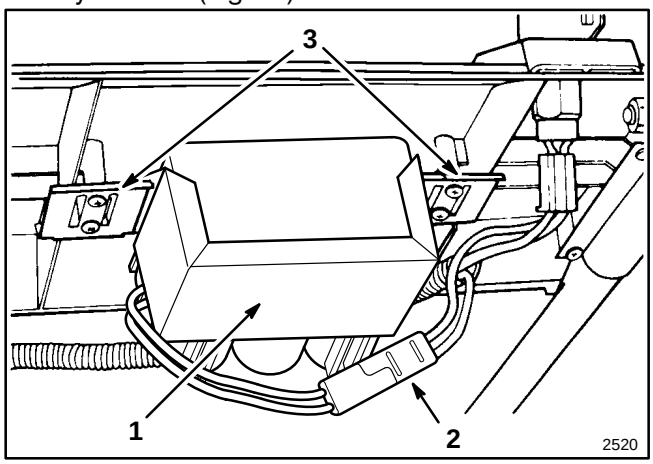

Figure 27

1. Battery **2. Wire harness** **3. Mounting tabs**

2. If desired, battery can be removed by sliding it out of mounting tabs. However, removal is not required if mower can be positioned near an electrical outlet.

3. Connect TORO electro charger to battery and plug into 220VAC power outlet. After charging battery for 72 hours, unplug charger and disconnect from battery.

4. Connect wiring harness to battery terminal.

IMPORTANT: Only the TORO electro charger is recommended because other chargers could damage the battery. Always use charger indoors and charge battery at room temperature (22°C or +70°F) whenever possible. Do not charge battery longer than 72 hours because damage could result.

MAINTENANCE

REPLACING FUSE (electric start model)

The electrical system charging circuit is protected by a fuse. If the battery does not stay charged, the fuse may be blown. Use a 5 amp AGC-5 fuse.

1. Push the two fuse holder sections together. Rotate fuse holder cap to open fuse holder (Fig. 28).

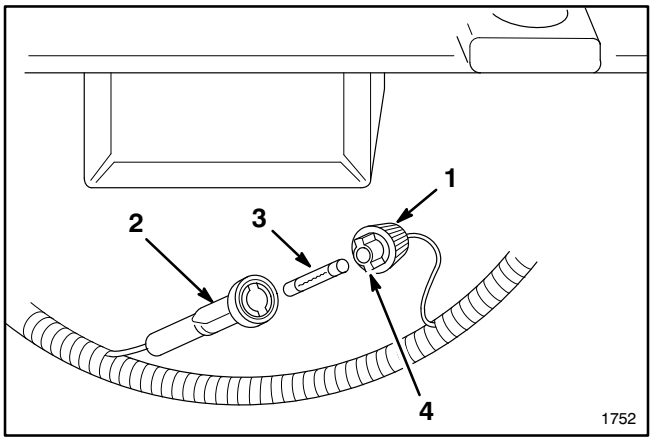

Figure 28

1. **Fuse holder cap**
2. **Fuse holder bottom**
3. **Fuse**
4. **Tab (2)**

2. Remove fuse and discard.

3. Install new fuse.

4. Line up tabs on fuse holder cap with fuse holder bottom and push sections together. Rotate cap to close fuse holder.

CLEANING

Plug

To ensure best performance, the discharge tunnel plug must be cleaned after each use. When grass is thick and lush, clippings may collect on and around the plug; this may make plug removal difficult. After each use, remove plug from discharge tunnel and clean off all debris.

Underside Of Mower Housing

1. Position mower on a flat surface near a garden hose.

2. Attach a quick disconnect coupling (sold separately) to the end of the garden hose. Attach coupling to mower washout fitting and turn water on high (Fig. 29).

3. Start the engine.

4. Let mower run for two minutes.

5. Stop the engine.

6. Turn the water off and remove coupling from the washout fitting.

7. Restart mower and let it run for one minute to dry out moisture on the mower and its components.

8. If underside of mower deck has excessive grass build-up or packing, reconnect the hose to the washout fitting, turn the water on high and run the mower for two minutes. Stop the mower and turn off the water. Let the mower soak for 30 minutes. Then turn the water on high again and run the mower for another two minutes.

⚠ WARNING

POTENTIAL HAZARD

- **A broken or missing washout fitting could expose you and others to thrown objects or blade contact.**

WHAT CAN HAPPEN

- **Contact with thrown debris or blade contact will cause injury or death.**

HOW TO AVOID THE HAZARD

- **Replace broken or missing washout fitting immediately before using mower again.**
- **Plug any hole(s) in mower with bolts and lock nuts.**
- **Never put your hands or feet under the mower or through openings in the mower.**

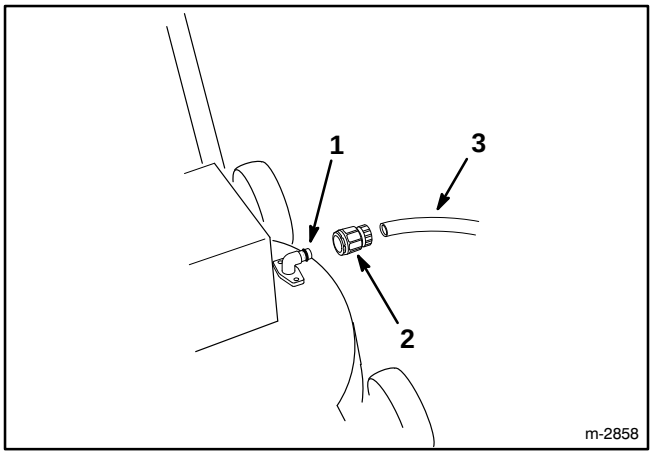

Figure 29

1. **Washout fitting**
2. **Quick disconnect coupling**
3. **Hose**

PREPARING MOWER FOR STORAGE

1. For long term storage, either drain gasoline from fuel tank or add a fuel additive to the gasoline. To drain gasoline, refer to Draining Gasoline, page 13. After fuel is drained, start engine and let it idle until all fuel is consumed and engine stops. Repeat the starting procedure two more times to ensure all gas is removed from the engine. If gasoline is not drained and a fuel stabilizer is not added, gum-like varnish deposits will form and cause poor engine operation, even starting problems.

MAINTENANCE

Fuel can be left in gas tank only if a fuel stabilizer is added to gasoline before storing. Toro does not recommend stabilizers with an alcohol base, such as ethanol, methanol or isopropyl. Use fuel stabilizer in recommended quantities as specified on container.

Under normal conditions, fuel additives remain effective in fuel for 6-8 months.

2. Drain oil: refer to Changing Crankcase Oil, page 13. After oil is drained, do not fill crankcase with oil until the following steps (3−10) are completed.

3. Remove spark plug and pour 30 ml (2 tablespoons) of SAE 30 oil into hole in cylinder. Pull starter rope slowly to coat inside of cylinder. Install spark plug and tighten to 20 N·m (15 ft−lb). **DO NOT INSTALL WIRE ON SPARK PLUG.**

4. Clean mower housing: refer to Cleaning, page 17.

5. Check condition of blade; refer to Inspecting/Removing/Sharpening Blade, page 15.

6. Tighten all nuts, bolts, and screws.

7. Clean dirt, chaff, grass clippings, and grime from external parts of the engine, shrouding, and top of mower housing.

8. Clean air cleaner; refer to Servicing Air Cleaner, page 13.

9. Lubricate the wheels; refer to Lubrication, page 16.

10. Touch up all rusted or chipped paint surfaces. Toro Re−Kote paint is available from an Authorized TORO Service Dealer.

11. Fill crankcase with oil; refer to Fill Crankcase With Oil, page 8.

12. Charge battery for 72 hours (electric start model); refer to Charging Battery, page 16.

13. Store mower in a clean, dry place. Cover mower to keep it clean and protected.

PRODUCT IDENTIFICATION

A model and a serial number decal is located on right side of mower housing ahead of discharge door. Always refer to specific numbers on this decal in correspondence or when replacement parts are needed.

TORO SERVICE SUPPORT

If help − concerning safety, set−up, operation, maintenance, or troubleshooting − is ever needed, contact the local Authorized TORO Service Dealer or Distributor. In addition to skilled service technicians, the dealer and distributor have factory approved accessories and replacement parts. Keep your Toro all TORO. Buy genuine TORO replacement parts and accessories.

THE TORO STARTING GUARANTEE

A Five Year Limited Warranty
On The Toro GTS 200 OHV Engine

What Is Covered?

The Toro Company guarantees that your TORO GTS 200 Engine will start on the first or second pull for five years from the date of purchase—if you provide the routine maintenance it requires—or we will fix it. The cost of parts and labor are included, but you must pay transportation costs.

What Must You Do To Keep The Warranty In Effect?

You must maintain your TORO GTS 200 Engine by following the maintenance schedule detailed in the Operator's Manual, at your expense. You must record this work in the maintenance chart provided and keep your proof of purchase. You will also need to have your TORO GTS 200 engine serviced annually by an Authorized TORO Service Dealer.

How Do You Get Service?

If the starting performance of your TORO GTS 200 Engine should diminish to the point where it will not start in one or two pulls by a normal, able-bodied adult, you should follow the procedures below:

1. Contact any Authorized TORO Service Dealer or the TORO Distributor.

2. He will either instruct you to return the product to him or recommend another Authorized TORO Service outlet which might be more convenient.

3. Take the product, your maintenance records, and proof of purchase to the Service Dealer.

If, for any reason, you are dissatisfied with the Dealer's analysis of your engine's starting condition, or the assistance provided, please contact your TORO distributor:

What Does This Warranty Not Cover?

This Warranty does not cover:

1. Any repairs on products used commercially.

2. Normal maintenance including replacement of spark plugs, air filter, fuel filter, and carburetor adjustments.

3. Oil change and lubrication.

4. Repairs or adjustments due to:

a. Failure to follow proper maintenance procedures;

b. Rotary mower blade striking an object;

c. Contaminants in the fuel system;

d. Improper fuel or fuel mixture (consult your owner's manual if in doubt);

e. Failure to follow the proper storage procedures as specified in the Operator's Manual;

f. Operation misuse, neglect or accidents;

g. Repairs or attempted repairs by anyone other than an Authorized TORO Service Dealer.

5. Special operational conditions where starting may require more than two pulls, including:

a. First time starts after extended period of non-use or seasonal storage;

b. Cool temperature starts such as those found in early spring and late autumn may require an additional pull or two (applies to rotary products only);

c. Improper starting procedures. If you are having difficulty starting your unit, please check the operator's manual to ensure you are using the correct starting procedures. This can save an unnecessary visit to a Service Dealer.

All warranty repairs reimbursable under this warranty must be performed by an Authorized TORO Service Dealer using Toro approved replacement parts.

The above remedy through repair by an Authorized TORO Service Dealer is the purchaser's sole remedy.

GUARANTEED TO START MAINTENANCE RECORD

To keep the starting guarantee in effect, you must perform the following maintenance after every 25 operating hours, more often in dusty and dirty conditions. Follow the procedures in this Operator's Manual and record information on this chart.

Date	Hours Used	Air Cleaner Service	Change Oil Doesn't Apply to 2–Cycle	Lubricate Wheels	Check Spark Plug	Mower Storage