Form No. 3396-481 Rev B

Counter-Rotating Groomer Drive System

DPA Cutting Units for Greensmaster® Flex™ 1800/2100, eFlex® 1800/2100, and TriFlex® 3300/3400 Series Traction Unit

Model No. 04260

Installation Instructions

This product complies with all relevant European directives. For details, please see the Declaration of Incorporation (DOI) at the back of this publication.

⚠ WARNING

CALIFORNIA
Proposition 65 Warning

This product contains a chemical or chemicals known to the State of California to cause cancer, birth defects, or reproductive harm.

Note: Kit 120–2760 is required when using this kit on a TriFlex with an electric reel. Contact your Authorized Toro Distributor for more information.

The following groomer reels are also available for this product:

- 18-inch carbide groomer
- 18-inch spiral brush
- 18-inch soft grooming brush
- 18-inch stiff grooming brush
- 18-inch spring-steel groomer
- 18-inch thin-spring-steel groomer
- 21-inch spring steel groomer
- 21-inch carbide groomer
- 21-inch spiral brush
- 21-inch soft grooming brush
- 21-inch stiff grooming brush
- 21-inch thin-spring-steel groomer

Contact your authorized Toro distributor for more information.

© 2017—The Toro® Company
8111 Lyndale Avenue South
Bloomington, MN 55420

Register at www.Toro.com.

CE

Original Instructions (EN)
Printed in the USA
All Rights Reserved

3396-481 B

Loose Parts

Use the chart below to verify that all parts have been shipped.

Description	Qty.	Use
Right groomer-arm assembly	1	Install the groomer drive system and a reel or brush.
Bushing	2	
Spring washer	2	
Locknut	2	
Left groomer-arm assembly	1	
Short bolt	2	
Special washer	2	
Height-of-cut screw	2	
Side-plate assembly	1	
Shoulder bolt	2	
Driven gear	1	
Driven-gear locknut	1	
Groomer drive	1	
Face gasket	1	
Flange-head bolt	5	
Groomer-assembly cover	1	
Upper idler gear	1	
Flange nut	2	
Tension spring	1	
Inner compression spring (walk-behind units only)	2	
Outer compression spring (walk-behind units only)	2	
Left support-plate assembly	1	
Support plate	1	
Screw	4	
Roller-height shim	6	
Long bolt	4	
Lower idler gear	1	
Spacer	1	

Installing the Groomer Drive System

Preparing the Cutting Unit

Important: **Read these instructions thoroughly before setting up or operating the groomer. Failing to follow setup or operating instructions in this manual may result in damage to the cutting unit and/or the groomer or the turf.**

Note: Determine the left and right sides of the machine from the normal operating position.

1. Separate the cutting unit from the traction unit. Refer to the *Operator's Manual* for procedure.
2. Loosen the screws securing each end of the front roller to the height-of-cut arms (Figure 1).

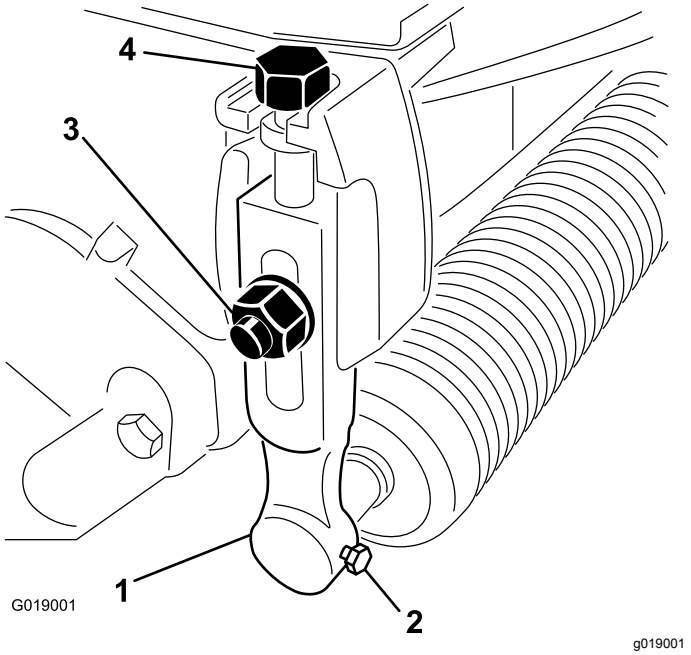

Figure 1

1. Height-of-cut arm
2. Roller-mounting screw
3. Plow bolt, washer, and locknut
4. Adjusting screw

3. Remove the plow bolts, washers, and locknuts securing the height-of-cut arms to each end of cutting unit (Figure 1). Remove the height-of-cut arms and roller assembly.

   Note: Retain all parts for use if you ever remove the groomer.
4. Remove the height-of-cut adjusting screws from the height-of-cut arms (Figure 1).
5. Remove the 2 bolts and nuts securing the counterweight to the right end of the cutting unit. Remove the counterweight (Figure 2).

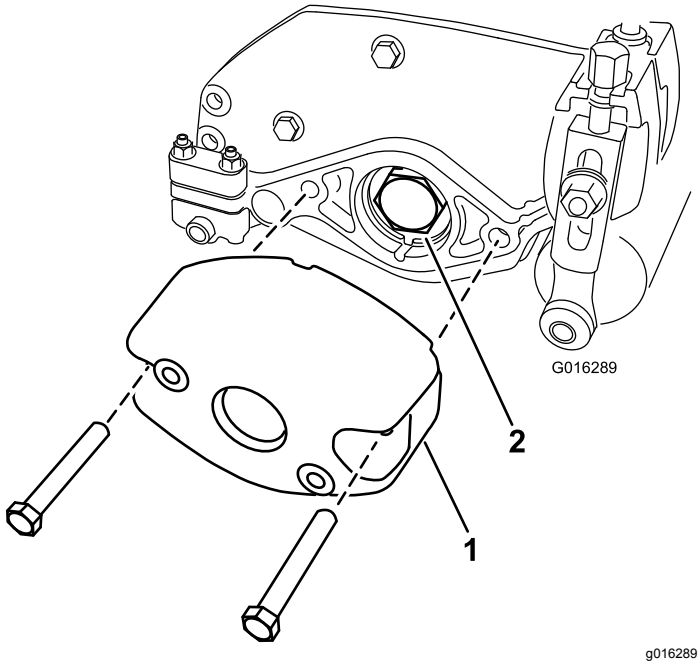

Figure 2

1. Counterweight
2. Bearing nut

6. Remove the bearing nut from the reel shaft (Figure 2).
7. If the kit is being installed on a **TriFlex 3300, 3320, 3400, or 3420 machine,**, remove the 2 bolts securing the motor mount to the left end of the cutting unit. Remove the motor mount (Figure 3).

   Note: Retain the parts.

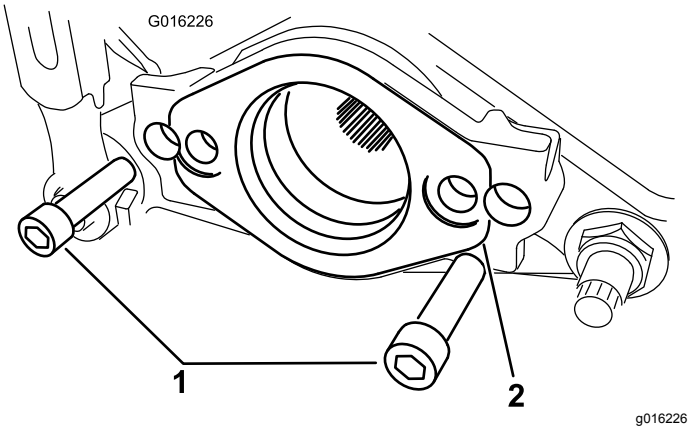

Figure 3

1. Bolt
2. Motor mount

Removing the Belt-Drive Assembly

Walk-Behind Units Only

Note: Retain all parts in this section, except where noted.

1. Loosen the captive bolt securing the belt cover to the left end of the cutting unit until you can remove the cover (Figure 4).

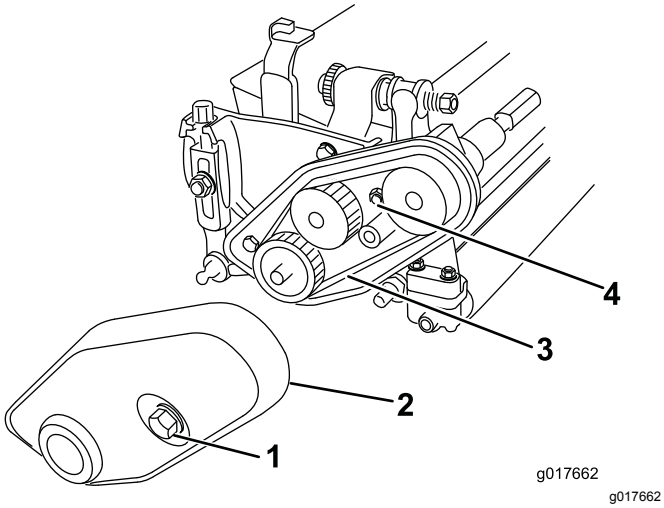

g017662

Figure 4

1. Belt-cover bolt (captive)
2. Belt cover
3. Belt
4. Belt-tensioning nut

2. Loosen the belt tensioning nut and remove the belt (Figure 4).
3. Loosen the 2 set screws securing the lower pulley and remove the pulley from the reel shaft (Figure 5).

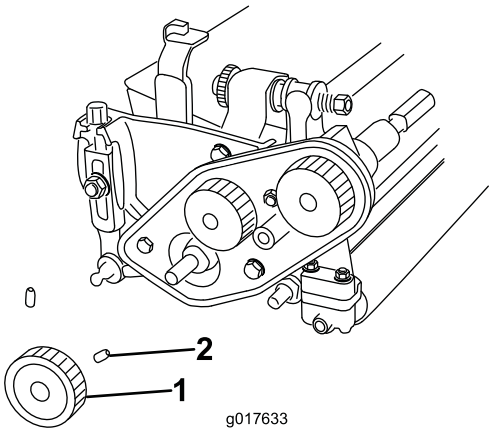

g017663

Figure 5

1. Lower pulley
2. Set screw

4. Remove the 3 bolts securing the belt-drive assembly to the cutting unit, if equipped, and remove the whole assembly (Figure 6).

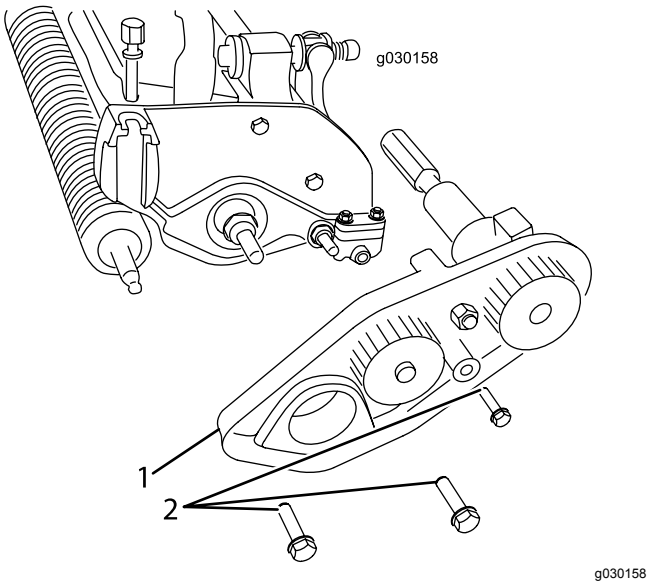

Figure 6

1. Drive assembly
2. Bolt

5. Use a long-nose pliers to remove the existing compression springs on both sides of the cutting unit and replace them with the new inner and outer compression springs (Figure 7).

   Note: Discard the existing compression springs.

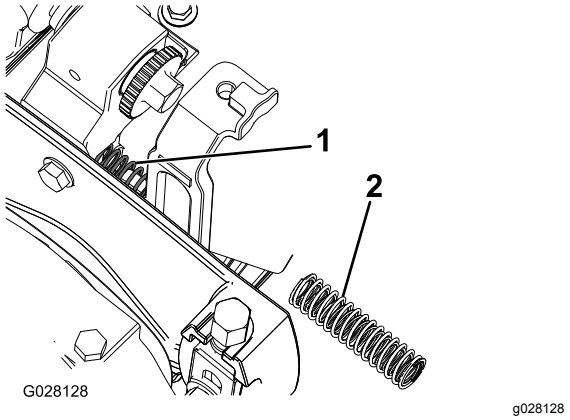

Figure 7

1. Inner compression spring
2. Outer compression spring

Installing the Gears and Groomer Shaft

1. Secure the rear mounting plate using 2 shoulder bolts as shown in Figure 8.

   Note: Make sure that the side plate rotates freely.

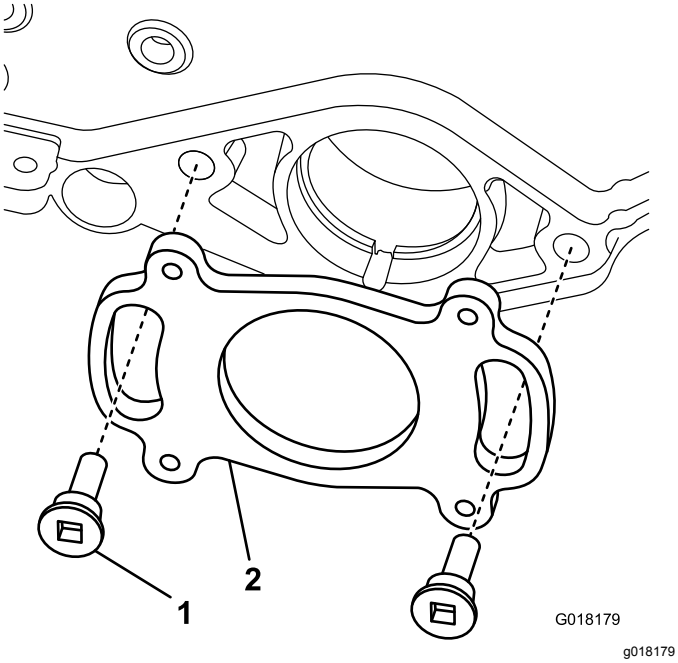

Figure 8

1. Shoulder bolt
2. Rear mounting plate

2. Put a light coating of grease on the O-ring and the pilot bore (Figure 9).

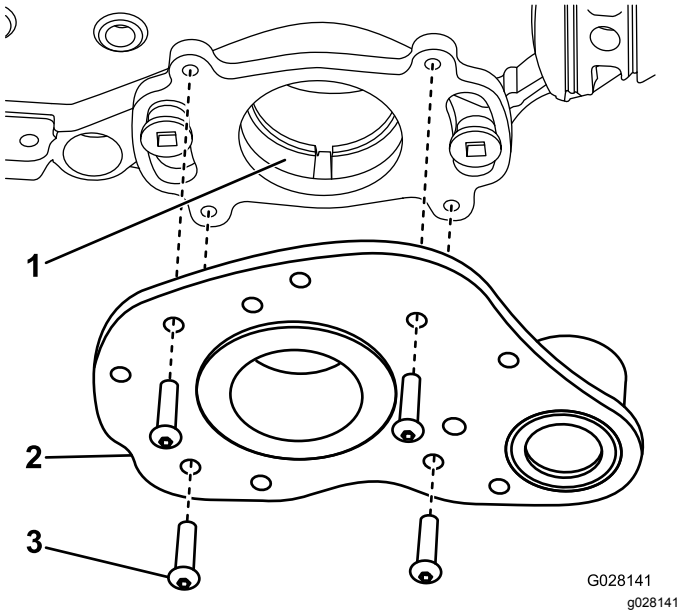

Figure 9

1. Pilot bore
2. Drive assembly
3. Screw

3. Secure the drive assembly to the rear mounting plate with 4 screws (Figure 9).
4. Apply grease to the seal in the drive assembly bearing support and to the splined end of the groomer shaft (Figure 10).

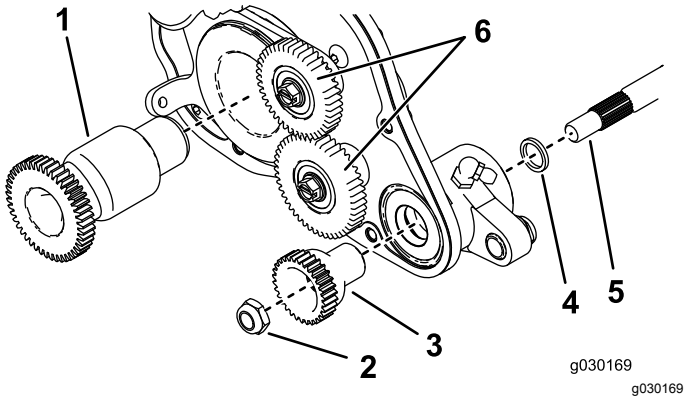

Figure 10

1. Drive gear
2. Driven gear locknut
3. Driven gear
4. Spacer
5. Groomer shaft
6. Idler gears

5. Install the spacer onto the splined end of the groomer shaft.
6. Slide the splined end of the groomer shaft into the drive-assembly-bearing support (Figure 10).
7. Apply grease to the seal surface of the driven gear, as shown in Figure 11.

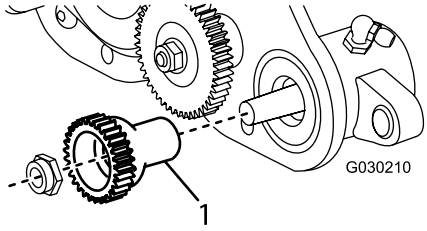

Figure 11

1. Apply grease here.

8. Secure the gear to the groomer shaft with the driven gear locknut (Figure 10).
9. Torque the locknut to 23 to 28 N·m (17 to 21 ft-lb).
10. Apply grease to the seal in the left support-plate bearing support and to the end of the groomer shaft.
11. Insert the other end of the groomer shaft into the left support plate (Figure 6).
12. If you are installing the kit on a **TriFlex 3300, 3320, 3400, or 3420 machine**, proceed to step 13. If you are installing the kit on a **walk-behind unit**, perform the following steps:

A. Install the belt-drive assembly using the previously removed bolts, and ensure that the side plate rotates freely (Figure 6).

B. Install the lower pulley onto the reel drive shaft, securing it with 2 set screws onto the key on the shaft (Figure 5).

C. Torque the set screws to 7 to 7.5 N·m (60 to 65 in-lb).

D. Install the drive belt and tension it as described in the traction unit *Operator's Manual*.

13. Secure the groomer drive gear to the reel shaft on the right side of the reel (Figure 10), and torque to 170 N·m (125 ft-lb).

Note: The use of an impact gun is not enough to ensure proper installation. Failing to properly torque the drive pulley can result in the assembly unscrewing itself during operation.

14. Install and secure the idler gears (Figure 10) and torque the capscrews to 13.5 N·m (120 in-lb).

15. Install the idler tension spring (Figure 12).

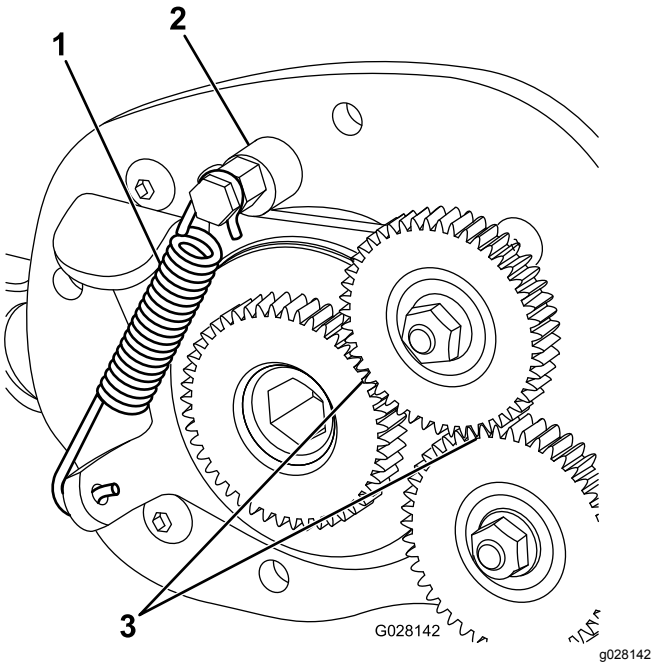

Figure 12

1. Tension spring
2. Eccentric stop
3. Measure here.

16. With the idler gear engaged, use a spark plug gapping tool to check that there is a 0.38 to 0.45 mm (0.015 to 0.018 inch) gap between the driver and fixed idler gear (Figure 12).

Note: You can adjust the gap by rotating the eccentric stop for the idler gear.

Installing the Adjuster Arms

1. Install the bushing in the hole in the right groomer-drive assembly (Figure 13).

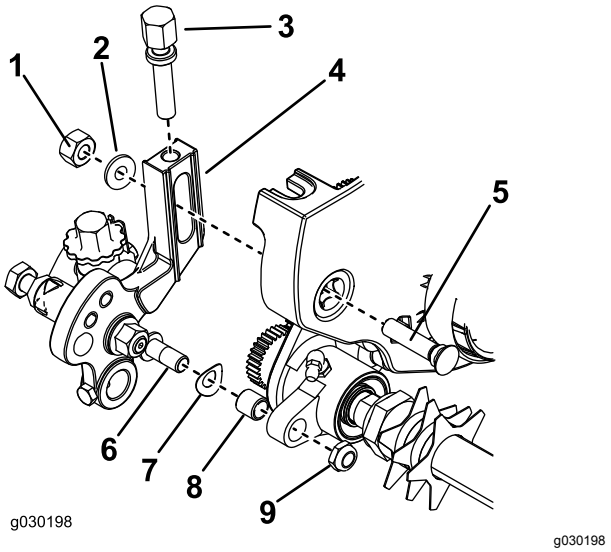

Figure 13

1. Nut
2. Special washer
3. Height-of-cut screw
4. Adjuster-arm assembly
5. Plow bolt
6. Rod end of the height-of-cut assembly
7. Spring washer
8. Bushing
9. Locknut

2. Thread the height-of-cut adjusting screw into the top of the right adjuster-arm assembly (Figure 13).

3. Install the spring washer onto the rod end of the height-of-cut arm assembly (Figure 13).

4. Install the right adjuster-arm assembly to the cutting unit side plate using a plow bolt, nut, and special washer (Figure 13).

Note: Make sure that the rod end of the height-of-cut arm assembly slides into the bushing in the hole in the groomer drive assembly.

5. Secure the adjuster-arm assembly rod end to the groomer drive assembly with the locknut (Figure 13).

Note: Do not overtighten the locknut. The washer should be compressed but the arm must be free to pivot.

6. Insert the roller shaft into the right adjuster arm and loosely secure it with a short bolt (Figure 14).

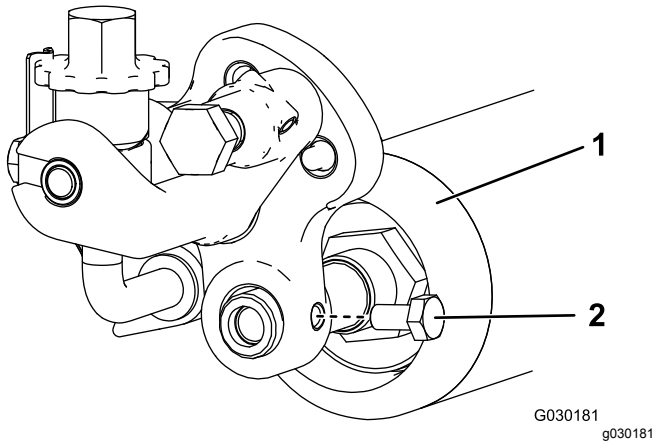

Figure 14

1. Roller
2. Short bolt

7. Install the bushing in the hole in the left groomer-drive assembly (Figure 13)
8. Thread the height-of-cut adjusting screw into the top of the left adjuster-arm assembly (Figure 13).
9. Insert the roller shaft into the left adjuster arm.

   Note: Do not tighten the bolt at this time.
10. Install the spring washer onto the rod end of the left height-of-cut arm assembly (Figure 13)
11. Install the left adjuster-arm assembly to the cutting unit side plate using a plow bolt, nut, and new washer (Figure 13).

    Note: Make sure that the rod end slides into the bushing in the hole in the groomer drive assembly.
12. Secure the adjuster-arm assembly rod end to the groomer drive assembly with a locknut (Figure 13).
13. Fill the gearbox cover with approximately 0.15 L (5 oz) of Mobil XHP-221 or equivalent and mount it to the groomer housing assembly with the gasket in between using 5 bolts (Figure 15).

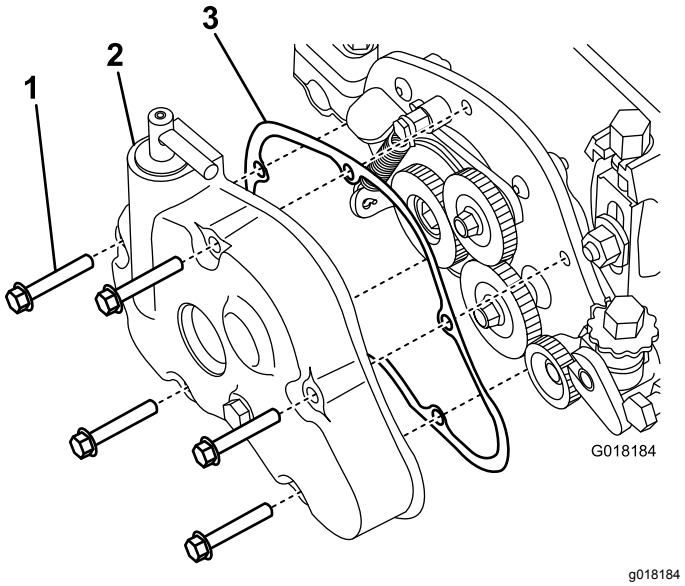

Figure 15

1. Bolt
2. Gear-box cover
3. Gasket

14. Center the roller between the adjuster arms and tighten the mounting bolts (Figure 14).
15. If you are installing the kit on a **TriFlex 3300 or 3400 machine**, proceed to step 16. If you are installing the kit on a **walk-behind unit**, perform the following steps:
    A. Install the belt-drive assembly to the cutting unit using the 3 bolts that you removed previously (Figure 6).
    B. Install the pulley to the reel shaft using the 2 set screws that you removed previously (Figure 5).
    C. Install the belt and tighten the belt-tensioning nut (Figure 4).
    D. Install the belt cover and tighten the captive bolt (Figure 4).
16. If you are installing the kit on a **TriFlex 3300 or 3400 machine**, install the motor mount to the left end of the cutting unit using the 2 bolts that you removed previously (Figure 3).

17. Pump grease into the fittings until grease is purged onto the groomer shaft. Wipe excess grease from the seals and shaft.

    Note: Lubricate the groomer bearings (Figure 17 and Figure 16) weekly or after every 10 operating hours, before extended periods of non-use and immediately after every washing.

    Note: Operate the groomer for 30 seconds after greasing. Disengage the cutting unit and wipe excess grease from the seals and shaft.

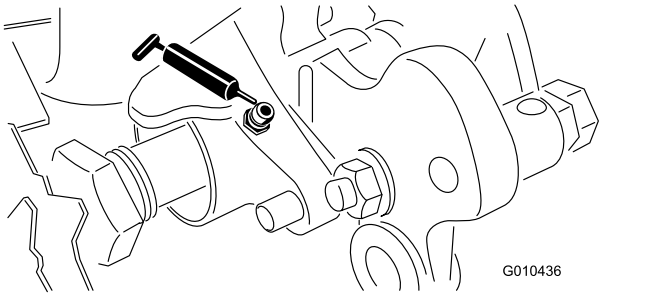

Figure 16

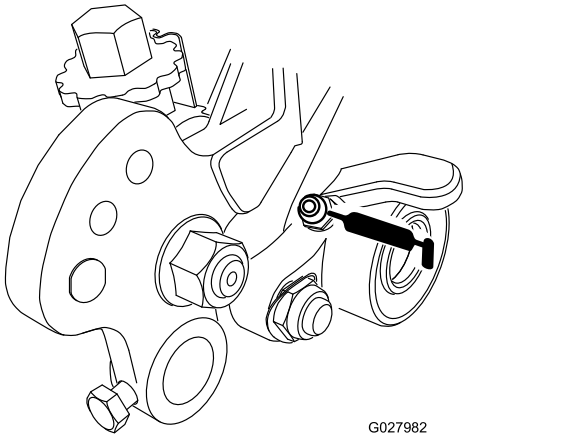

Figure 17

Operation

Introduction

Grooming is performed in the turf canopy above the soil level. Grooming promotes vertical growth of grass plants, reduces grain, and severs stolons producing a denser turf. Grooming produces a more uniform and tighter playing surface for faster and truer action of the golf ball.

Verticutting is a more aggressive cultivation technique designed to remove thatch by cutting through the turf canopy and into the thatch/mat layer. Grooming should not be considered a replacement for verticutting. Verticutting is generally a more rigorous and periodic treatment that can temporarily damage the playing surface, while grooming is a routine and gentler treatment designed to manicure the turf.

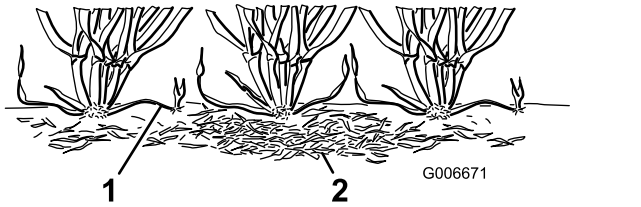

Figure 18

1. Grass runners (stolons) 2. Thatch

Grooming brushes are a more recent development which are designed to be less intrusive than conventional grooming blades when adjusted to lightly contact the turf canopy. Brushing may be more benefical for the ultra-dwarf cultivars, since these grass types have more of a upright growth pattern and do not fill in that well through horizontal growth. Brushes, however, can injure leaf tissue if they are set to penetrate too deeply into the canopy.

Grooming is similar to verticutting in its runner cutting action. Grooming blades however, should never penetrate the soil like verticutting or dethatching. Groomer blades are spaced closer together and are used more often than verticutters so that they are more effective in cutting runners and removing thatch.

Because grooming injures leaf tissue to some degree it should be avoided during periods of high stress. Cool season species such as creeping bent grass and annual blue grass should not be groomed during high temperature (and high humidity) periods in midsummer.

It is difficult to make precise recommendations on use of grooming reels because so many variables affect the performance of grooming, including:

- The time of the year (i.e., the growing season) and weather pattern

- The general condition of each green
- The frequency of grooming/cutting-both how many cuttings per week and how many passes per cutting
- The height-of-cut setting on the main reel
- The height/depth setting on the grooming reel
- How long the grooming reel has been in use on this green
- The type of grass on the green
- The overall greens management program (i.e., irrigation, fertilizing, spraying, coring, over seeding, etc.)
- Traffic
- Stress periods (i.e., high temperatures, high humidity, unusually high traffic)

These factors can vary from golf course to golf course and from green to green. It is important, therefore, to inspect the greens frequently and vary the grooming practice in accordance with the need.

The groomer is set at the factory with 13 mm (1/2 inch) blade spacing. The 13 mm (1/2 inch) setting allows you to groom slightly deeper to cut stolons without thinning out the turf excessively. By removing spacers and adding blades or by adding spacers and removing blades, the groomer can be changed to 6 mm (1/4 inch) or 19 mm (3/4 inch) spacing.

Grooming with 6 mm (1/4 inch) blade spacing is recommended for fast growth periods (spring through early summer) mainly to thin out the top layer of the canopy. Grooming with 19 mm (3/4 inch) blade spacing is recommended for slower growth periods (late summer through fall and winter). During high stress periods, it may be desirable to not use the grooming reel.

Note: Grooming with 6 mm (1/4 inch) blade spacing tends to remove more grass blades and thatch and cut more runners than grooming with 13 mm (1/2 inch) or 19 mm (3/4 inch) blade spacing. If you are grooming with 6 mm (1/4 inch) blade spacing, 1 or 2 groomings per week will probably be sufficient except during maximum growth periods.

Note: The practice of changing the direction of cut each time the green is cut should be continued when a groomer is used. This rotation will enhance the effects of the grooming.

Setting the Height/Depth of the Groomer

The groomer blade height/depth can be set using the following chart, figures, and procedure:

Number of rear-roller spacers required	Height of cut (HOC)	Groomer-arm position	Height of grooming range (HOG)
0	1.5 mm (0.06 inch)	A	0.8 to 1.5 mm (0.03 to 0.06 inch)
	3.0 mm (0.12 inch)	A	1.5 to 3.0 mm (0.06 to 0.12 inch)
	4.8 mm (0.19 inch)	B	2.3 to 4.8 mm (0.09 to 0.19 inch)
	6.4 mm (0.25 inch)	B	3.0 to 6.4 mm (0.12 to 0.25 inch)
1	7.9 mm (0.31 inch)	B	3.8 to 7.9 mm (0.15 to 0.31 inch)
	9.7 mm (0.38 inch)	B	4.6 to 9.7 mm (0.18 to 0.38 inch)
2	11.2 mm (0.44 inch)	B	5.3 to 11.2 mm (0.21 to 0.44 inch)
	12.7 mm (0.50 inch)	B	6.4 to 12.7 mm (0.25 to 0.50 inch)
3	15.9 mm (0.625 inch)	B	9.4 to 12.7 mm (0.37 to 0.50 inch)
4	19.1 mm (0.75 inch)	B	12.7 to 15.7 mm (0.50 to 0.62 inch)

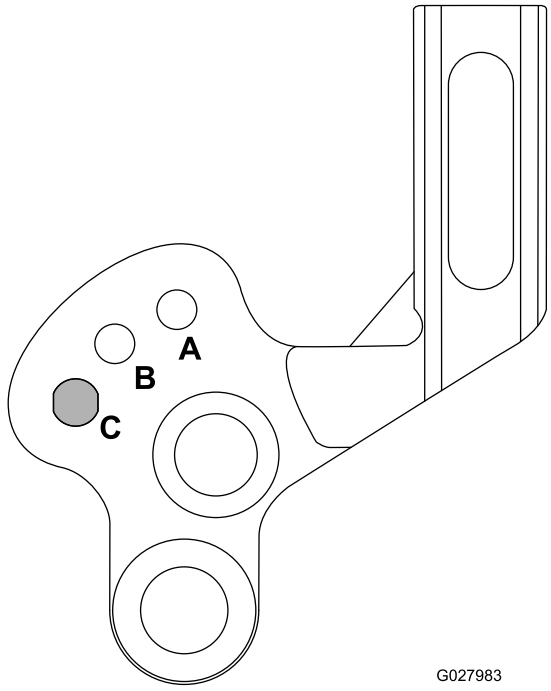

g027983

Figure 19

1. A = Low height-of-groom range
2. B = High height-of-groom range/Transport for A range
3. C = Transport for B range (reduces clearance to the grass basket)

Note: If you are using the groomer on an eFlex traction unit, note that the groomer causes the unit to drain the battery faster than without. The deeper you set the groomer, the more power it will require and the faster the battery charge will be depleted.

1. Make sure that the rollers are clean. Position the machine on a flat, level work surface.
2. Using the above chart, determine the amount of rear roller spacers required to attain the desired grooming height/depth.

   Note: If installing 3 or 4 spacers on each side of the rear roller, use the longer screws (included in loose parts) instead of the standard screws.
3. Set the height of cut of the main reel.
4. Using the chart, determine the position required to attain the desired grooming height/depth. Raise or lower the grooming reel as follows:

   A. Loosen the bolts on the right and left groomer arms (Figure 20).

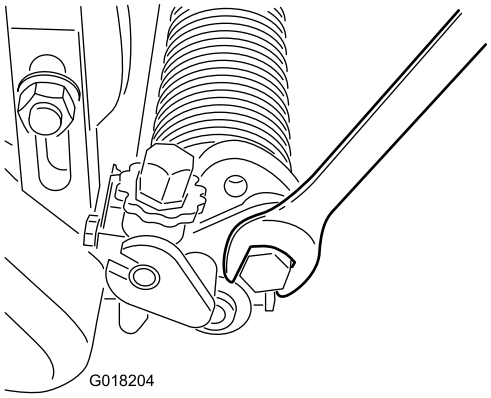

g018204

Figure 20

B. Rotate the arms up or down to the A or B position (Figure 19).

C. Tighten the bolts securing the adjustment (Figure 20).

5. On 1 end of the groomer shaft, measure the distance from the lowest tip of a groomer blade to the work surface.

6. Turn the groomer height adjusting knob (Figure 21) to raise or lower the blade tip to the desired grooming height.

   Note: Each notch on the adjusting knob is approximately equal to 0.08 mm (0.003 inch) of groomer depth.

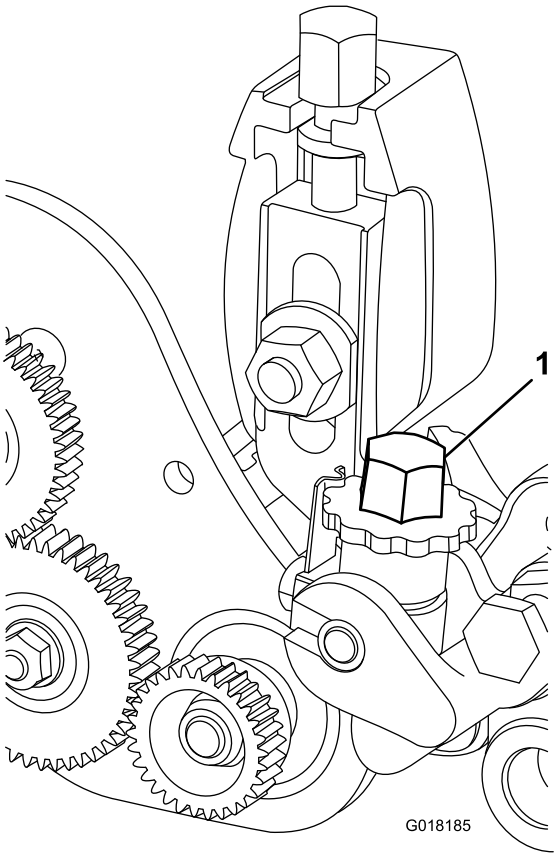

g018185

Figure 21

1. Groomer height-adjusting knob

7. Repeat this procedure on the opposite end of the groomer, then check the setting on first side. Adjust as required.

8. If you are not using the grooming mode, raise the grooming reel from A to B or from B to C.

   Note: At higher grooming heights, the grooming reel may have to be set in the C position, making the raise/lower feature unavailable.

Testing the Performance of the Groomer

Important: **Improper or over-aggressive use of the grooming reel (i.e., too deep or too frequent grooming) may cause unnecessary stress on the turf leading to severe greens damage. Use the groomer cautiously.**

It is important to determine the performance of the groomer before putting it into regular use on greens. Use the following format test procedure as practical way to determine the proper height/depth setting:

1. Set the cutting reel to the height of cut that you would normally use without a grooming reel.

Note: Use a Wiehle roller and scraper for the front roller.

2. Set the groomer reel 1/2 of the height-of-cut setting above the roller level.

   Note: For example, to set a 3.2 mm (1/8 inch) height-of-cut, set the groomer at 1.6 mm (1/16 inch) above the roller.

3. Make a pass over the test green, then lower the groomer flush with the roller level and make another pass over the test green.

4. Compare the results.

   Note: The first setting, when the setting was 1/2 the height-of-cut setting above the roller level, should have removed significantly less grass and thatch than the second setting.

5. Check the test green 2 or 3 days after the first grooming for general condition or damage. If the groomed areas are turning yellow or brown, and the non-groomed areas are green, the grooming was too aggressive.

   Note: The color of the grass changes when you use the grooming reel. An experienced greens superintendent can judge by the color of the turf (along with close examination) if the current grooming practice is appropriate for the particular green. Because the groom reel stands up more grass and removes thatch, the quality of cut is not the same as without the groomer. This effect is most noticeable the first few times you use a groomer on a green.

   Note: On multiple passes (i.e., double and triple cutting), the groomer penetrates deeper on each successive pass. Multiple passes are not recommended.

6. After testing the performance of the groomer on a test green and you obtain satisfactory results, you can begin grooming on the playing greens. However, each green may respond differently to grooming. In addition, growing conditions constantly change. Inspect the groomed greens frequently and make adjustments to the grooming procedure as often as necessary.

Transporting the Machine

When you wish to mow without the groomer or need to transport the machine, raise the grooming reel into its raised transport position as shown in Figure 19.

Maintenance

Cleaning the Grooming Reel

Wash off the grooming reel after use. Do not leave the grooming reel in water or the components will rust.

Greasing the Groomer Bearings

Lubricate the groomer bearings (Figure 22 and Figure 23) weekly or after every 10 operating hours, before extended periods of non use, and immediately after every washing. Pump grease into fittings until grease is purged onto groomer shaft. Wipe excess grease from the seals and shaft.

Note: Operate groomer for 30 seconds after greasing. Disengage cutting unit and wipe excess grease from the seals and shaft.

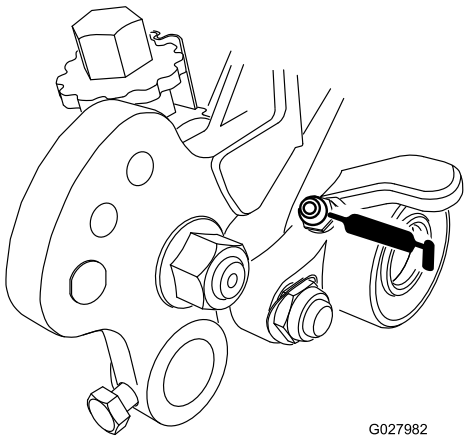

g027982

Figure 22

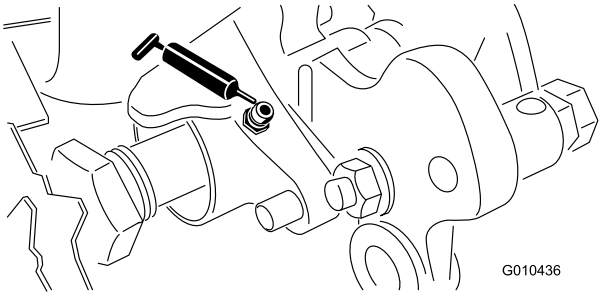

g010436

Figure 23

Greasing the Groomer Gears

Service Interval: Yearly

1. Remove the gearbox cover from the groomer housing, ensuring that the groomer gear clutch is engaged to remove spring force into the cover (Figure 24).

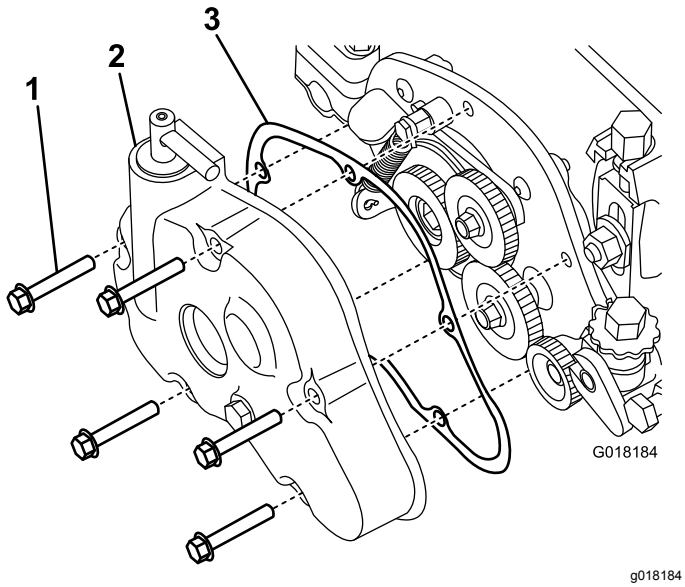

Figure 24

1. Bolt
2. Gearbox cover
3. Gasket

2. Clean out any excess grease from around the cover and gears. Do not use liquid or spray cleaners to prevent contamination of the grease or compatibility issues with the seal.
3. Pack the gears in 0.15 L (5 fl oz) of Mobil XHP 221 or equivalent grease.
4. Check for tears in the gasket and replace it if any are found. Clean the gasket sealing area when installing the gasket to ensure sufficient sealing of the gearcase.
5. Replace the gearbox cover. Torque the bolts to 11 N·m (100 in-lb).

Inspecting the Blades

Inspect the grooming-reel blades frequently for damage and wear. Straighten bent blades with a pliers. Replace worn blades, and torque the locknuts to 42 to 49 N·m (31 to 36 ft-lb). When inspecting the blades, check to see that the right and left blade shaft end nuts are tight.

Note: If using spring steel blades, when one side of the blades become worn, remove the grooming reel, rotate it 180 degrees, and install it so that the unworn side is facing the direction of rotation.

Note: Because the groomer may introduce more debris (i.e., dirt and sand) into the cutting unit than what the reel would normally be exposed to, the bedknife and main reel should be checked for wear more frequently. This is especially important in sandy soil and/or when the groomer is set for penetration.

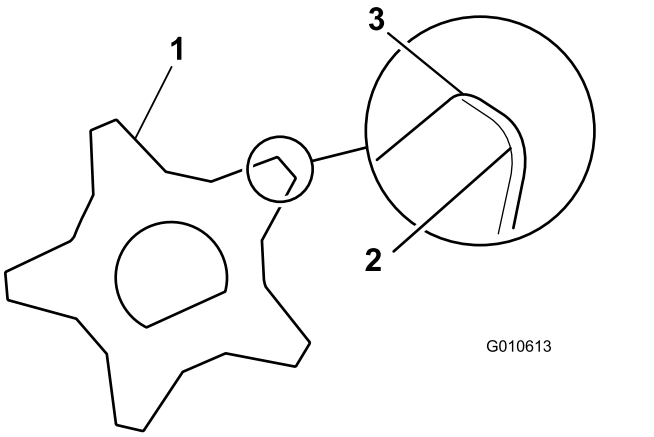

Figure 25

1. Grooming blade
2. Dull (rounded) edges
3. Sharp edges

Replacing the Grooming Reel

You can remove the grooming reel to replace individual blades or the entire shaft. Remove and replace the grooming reel shaft using the following procedure:

1. Remove the gearbox cover from the groomer housing (Figure 26).

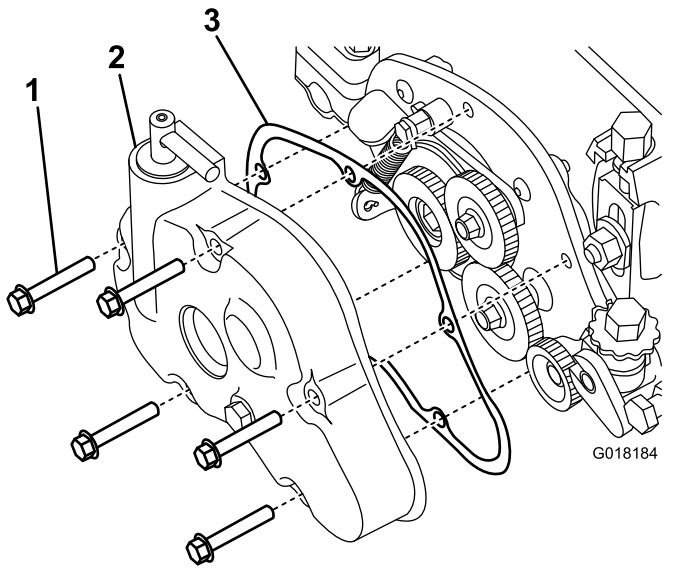

Figure 26

1. Bolt
2. Gearbox cover
3. Gasket

2. Loosen the bolt securing the roller shaft to the height-of-cut arm (Figure 27).

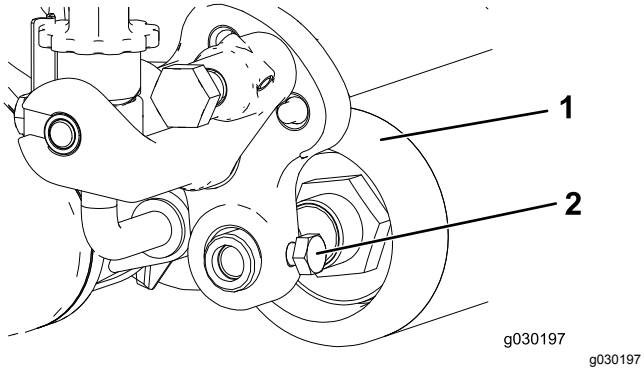

Figure 27

1. Roller
2. Roller-shaft bolt

3. Remove the locknut and Belleville washer securing the height-of-cut arm assembly rod end to the groomer drive assembly (Figure 28).

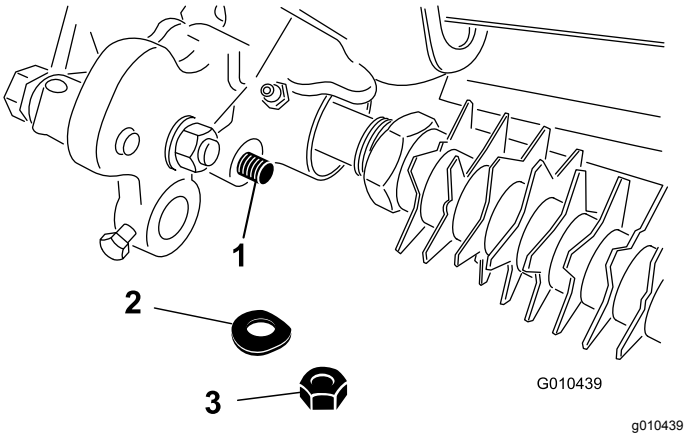

Figure 28

1. Rod end of height of cut assembly
2. Belleville washer
3. Locknut

4. Remove the plow bolt, nut, and washer securing the height-of-cut arm assembly to the side plate (Figure 29).

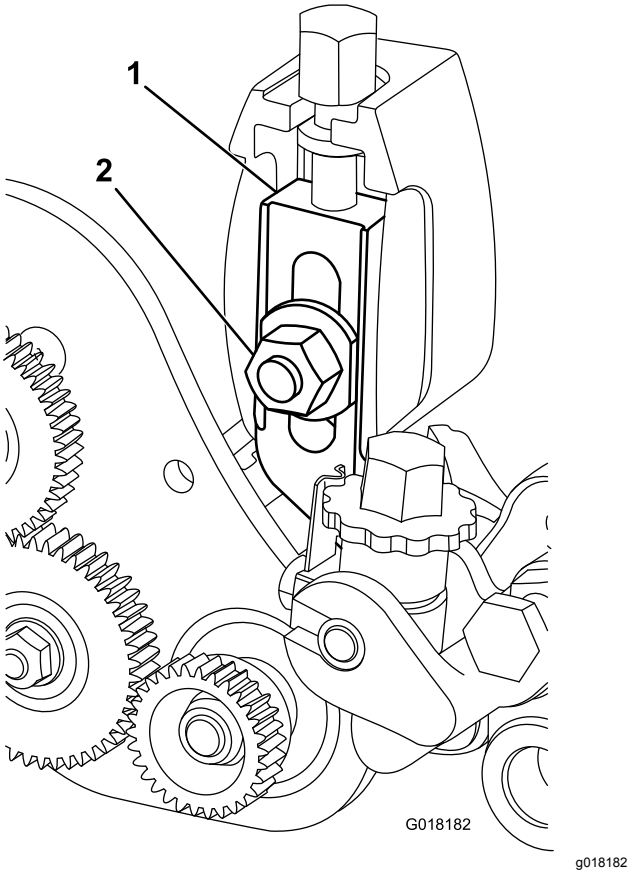

Figure 29

1. Adjuster-arm assembly
2. Washer and height-of-cut nut

5. Remove the flange locknut securing the driven gear to the end of the groomer shaft (Figure 30). Remove the gear.

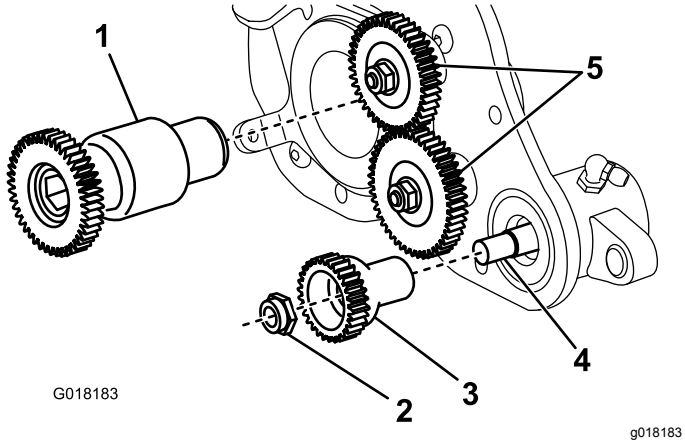

Figure 30

1. Drive gear
2. Driven gear lock nut
3. Driven gear
4. Groomer shaft
5. Idler gears

6. Remove the groomer drive gear from the reel shaft (Figure 30).
7. Remove the 4 screws securing the groomer drive assembly to the rear mounting plate (Figure 31).

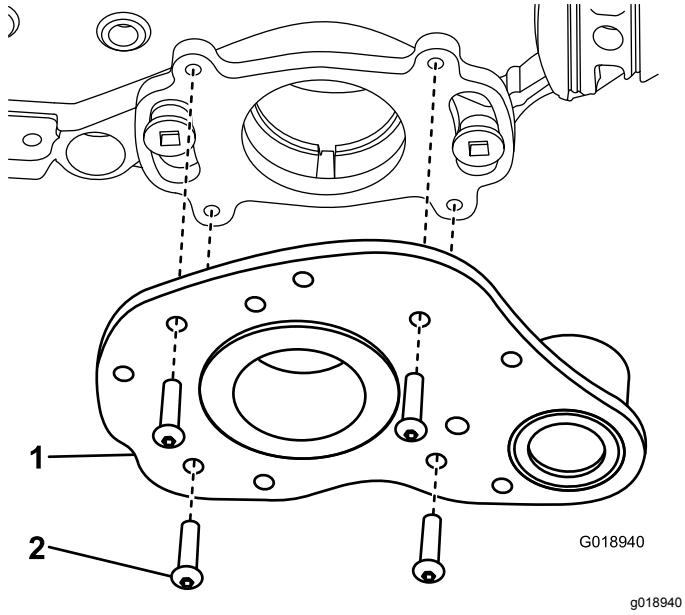

Figure 31

1. Groomer drive assembly
2. Screw

8. Remove the groomer shaft.
9. Torque the groomer drive gear to 170 N·m (125 ft-lb).

   Note: The use of an impact gun is not enough to ensure proper installation. Failing to properly torque the drive pulley can result in the assembly unscrewing itself during operation.

Declaration of Incorporation

The Toro Company, 8111 Lyndale Ave. South, Bloomington, MN, USA declares that the following unit(s) conform(s) to the directives listed, when installed in accordance with the accompanying instructions onto certain Toro models as indicated on the relevant Declarations of Conformity.

Model No.	Serial No.	Product Description	Invoice Description	General Description	Directive
04260	—	Counter-Rotating Groomer Drive System, DPA Cutting Units for Greensmaster Traction Unit	FLEX GROOMER DRIVE, COUNTER ROTATING	Groomer Drive System (CR)	2006/42/EC

Relevant technical documentation has been compiled as required per Part B of Annex VII of 2006/42/EC.

We will undertake to transmit, in response to requests by national authorities, relevant information on this partly completed machinery. The method of transmission shall be electronic transmittal.

This machinery shall not be put into service until incorporated into approved Toro models as indicated on the associated Declaration of Conformity and in accordance with all instructions, whereby it can be declared in conformity with all relevant Directives.

Certified:



John Heckel
Sr. Engineering Manager
8111 Lyndale Ave. South
Bloomington, MN 55420, USA
May 9, 2017

Authorized Representative:

Marcel Dutrieux
Manager European Product Integrity
Toro Europe NV
Nijverheidsstraat 5
2260 Oevel
Belgium

Tel. +32 16 386 659