Form No. 3400-966 Rev B

TORO®

Count on it.

Operator's Manual

Reelmaster® 5410-D or 5510-D Traction Unit

Model No. 03606—Serial No. 316000501 and Up
Model No. 03607—Serial No. 316000501 and Up

Register at www.Toro.com.
Original Instructions (EN)

CE

3400-966 B

This product complies with all relevant European directives; for details, please see the separate product specific Declaration of Conformity (DOC) sheet.

⚠ WARNING

CALIFORNIA
Proposition 65 Warning

This product contains a chemical or chemicals known to the State of California to cause cancer, birth defects, or reproductive harm.

Diesel engine exhaust and some of its constituents are known to the State of California to cause cancer, birth defects, and other reproductive harm.

It is a violation of California Public Resource Code Section 4442 or 4443 to use or operate the engine on any forest-covered, brush-covered, or grass-covered land unless the engine is equipped with a spark arrester, as defined in Section 4442, maintained in effective working order or the engine is constructed, equipped, and maintained for the prevention of fire.

Model No. _____

Serial No. _____

This manual identifies potential hazards and has safety messages identified by the safety-alert symbol (Figure 1), which signals a hazard that may cause serious injury or death if you do not follow the recommended precautions.



g000502

Figure 1

1. Safety-alert symbol

This manual uses 2 words to highlight information. **Important** calls attention to special mechanical information and **Note** emphasizes general information worthy of special attention.

Introduction

This machine is a ride-on, reel-blade lawn mower intended to be used by professional, hired operators in commercial applications. It is primarily designed for cutting grass on well-maintained lawns in golf courses, parks, sports fields, and on commercial grounds. It is not designed for cutting brush, mowing grass and other growth alongside highways, or for agricultural uses.

Read this information carefully to learn how to operate and maintain your product properly and to avoid injury and product damage. You are responsible for operating the product properly and safely.

You may contact Toro directly at www.Toro.com for product safety and operation training materials, accessory information, help finding a dealer, or to register your product.

Whenever you need service, genuine Toro parts, or additional information, contact an Authorized Service Dealer or Toro Customer Service and have the model and serial numbers of your product ready. The model and serial numbers are on a plate mounted on the left side of the frame under the foot rest. Write the numbers in the space provided.

© 2017—The Toro® Company
8111 Lyndale Avenue South
Bloomington, MN 55420

Contact us at www.Toro.com.
Printed in the USA
All Rights Reserved

Contents

Safety 4
Safe Operating Practices 4
Sound Power Level 6
Sound Pressure Level 6
Vibration Level 6
Engine Emission Certification 6
Safety and Instructional Decals 7
Setup 11
1 Adjusting the Tire Pressure 12
2 Adjusting the Control-Arm Position 12
3 Installing the Cutting Units 13
4 Adjusting the Turf-Compensation Spring 16
5 Using the Cutting-Unit Kickstand 16
Product Overview 17
Controls 17
Specifications 25
Attachments/Accessories 25
Operation 26
Think Safety First 26
Checking the Engine-Oil Level 26
Filling the Fuel Tank 26
Checking the Cooling System 28
Checking the Hydraulic Fluid 29
Checking the Reel-to-Bedknife Contact 29
Check the Torque of the Wheel Nuts 30
Burnishing the Brakes 30
Starting and Stopping the Engine 30
Cutting Grass with the Machine 30
Diesel Particulate Filter Regeneration 30
Adjusting the Lift-Arm Counterbalance 39
Adjusting the Lift-Arm Turnaround Position 39
Pushing or Towing the Machine 40
Jacking Points 40
Transporting the Machine 40
Loading the Machine 41
Setting the Reel Speed 43
Understanding the Diagnostic Light 44
Checking the Interlock Switches 44
Hydraulic-Valve Solenoid Functions 45
Operating Tips 45
Maintenance 47
Recommended Maintenance Schedule(s) 47
Daily Maintenance Checklist 48
Service Interval Chart 49
Lubrication 49
Greasing the Bearings and Bushings 49
Engine Maintenance 51
Servicing the Air Cleaner 51
Servicing the Engine Oil 52
Servicing the Diesel-Oxidation Catalyst (DOC) and the Soot Filter 53
Fuel System Maintenance 54
Servicing the Water Separator 54
Servicing the Engine-Fuel Filter 54
Checking the Fuel Lines and Connections 55
Fuel Pick-up Tube Screen 55
Electrical System Maintenance 55
Servicing the Battery 55
Fuses 56
Drive System Maintenance 56
Adjusting the Traction Drive for Neutral 56
Adjusting the Rear Wheel Toe-in 57
Cooling System Maintenance 57
Removing Debris from the Cooling System 57
Brake Maintenance 58
Adjusting the Parking Brakes 58
Adjusting the Parking-Brake Latch 59
Belt Maintenance 60
Servicing the Alternator Belt 60
Hydraulic System Maintenance 60
Changing the Hydraulic Fluid 60
Replacing the Hydraulic Filters 61
Checking the Hydraulic Lines and Hoses 62
Hydraulic-System Test Ports 62
Cutting Unit System Maintenance 63
Backlapping the Cutting Units 63
Storage 64
Preparing the Traction Unit 64
Preparing the Engine 64

Safety

Improper use or maintenance by the operator or owner can result in injury. To reduce the potential for injury, comply with these safety instructions and always pay attention to the safety-alert symbol, which means Caution, Warning, or Danger—personal safety instruction. Failure to comply with the instruction may result in personal injury or death.

Safe Operating Practices

The following instructions are from the EN ISO 5395:2013 and ANSI B71.4-2012.

Training

- Read the *Operator's Manual* and other training material carefully. Be familiar with the controls, safety signs, and the proper use of the equipment.
- Never allow children or people unfamiliar with these instructions to use or service the mower. Local regulations may restrict the age of the operator.
- Never mow while people, especially children, or pets are nearby.
- Keep in mind that the operator or user is responsible for accidents or hazards occurring to other people or their property.
- Do not carry passengers.
- All drivers and mechanics should seek and obtain professional and practical instruction. The owner is responsible for training the users. Such instruction should emphasize the the need for care and concentration when working with ride-on machines.
- The owner/user can prevent and is responsible for accidents or injuries occurring to people or damage to property.

Preparation

- While mowing, always wear substantial, slip-resistant footwear, long trousers, safety glasses, and ear protection.
- Thoroughly inspect the area where the equipment is to be used and remove all objects which may be thrown by the machine.
- Replace faulty silencers/mufflers.
- Evaluate the terrain to determine what accessories and attachments are needed to properly and safely perform the job. Only use accessories and attachments approved by the manufacturer.
- Check that the operator's presence controls, safety switches and shields are attached and functioning properly. Do not operate the machine unless they are functioning properly.

Safe Handling of Fuels

- To avoid personal injury or property damage, use extreme care in handling fuel. Diesel fuel is extremely flammable and the vapors are explosive.
- Extinguish all cigarettes, cigars, pipes, and other sources of ignition.
- Use only an approved fuel container.
- Never remove the fuel cap or add fuel with the engine running.
- Allow engine to cool before refueling.
- Never refuel the machine indoors.
- Never store the machine or fuel container where there is an open flame, spark, or pilot light, such as on a water heater or on other appliances.
- Never fill containers inside a vehicle or on a truck or trailer bed with a plastic liner. Always place containers on the ground, away from your vehicle before filling.
- Remove equipment from the truck or trailer and refuel it on the ground. If this is not possible, then refuel such equipment with a portable container rather than from a fuel-dispenser nozzle.
- Keep the nozzle in contact with the rim of the fuel tank or container opening at all times until fueling is complete. Do not use a nozzle lock open device.
- If fuel is spilled on clothing, change clothing immediately.
- Never overfill fuel tank. Replace the fuel cap and tighten it securely.

Operation

- Do not operate the engine in a confined space, where dangerous carbon monoxide and exhaust gases can collect.
- Mow only in daylight or in good artificial light.
- Before attempting to start the engine, disengage all blade attachment clutches, shift into neutral, and engage the parking brake.
- Use counterweight(s) or wheel weights as recommended in the *Operator's Manual*.
- Stay alert for holes in the terrain and other hidden hazards.
- Watch out for traffic when crossing or near roadways.
- Stop the blades rotating before crossing surfaces other than grass.
- When using any attachments, never direct discharge of material toward bystanders nor allow anyone near the machine while in operation.

- Never operate the machine with damaged guards, shields, or without safety protective devices in place. Make sure that all interlocks are attached, adjusted properly, and functioning properly.
- Do not change the engine governor settings or overspeed the engine. Operating the engine at excessive speed may increase the hazard of personal injury.
- Before leaving the operator's position, do the following:
  - Stop on level ground.
  - Disengage the power take-off and lower the attachments.
  - Change into neutral and set the parking brake.
  - Stop the engine and remove the key.
- Disengage drive to attachments when transporting or not in use.
- Stop the engine and disengage drive to attachment for the following:
  - Before refuelling
  - Before removing the grass catcher/catchers
  - Before making height adjustment unless adjustment can be made from the operator's position
  - Before clearing blockages
  - Before checking, cleaning or working on the mower
  - After striking a foreign object or if an abnormal vibration occurs. Inspect the mower for damage and make repairs before restarting and operating the equipment
- Reduce the engine speed setting during engine run-out and, if the engine is provided with a shutoff valve, turn the fuel off at the conclusion of mowing.
- Keep hands and feet away from the cutting units.
- Look behind and down before backing up to be sure of a clear path.
- Slow down and use caution when making turns and crossing roads and sidewalks. Stop cylinders/reels if not mowing.
- Do not operate the mower if tired, ill, or under the influence of alcohol or drugs.
- Lightning can cause severe injury or death. If lightning is seen or thunder is heard in the area, do not operate the machine; seek shelter.
- Use care when loading or unloading the machine into a trailer or truck.
- Use care when approaching blind corners, shrubs, trees, or other objects that may obscure vision.

Slope Safety

- Slow down the machine and use extra care on hillsides. Travel in the recommended direction on hillsides. Turf conditions can affect the stability of the machine.
- Avoid starting, stopping, or turning the machine on a slope. If the tires lose traction, disengage the blade(s) and proceed slowly straight down the slope.
- Do not turn the machine sharply. Use care when reversing the machine.
- When operating the machine on a slope, always keep all cutting units lowered.
- Avoid turning the machine on slopes. If you must turn, turn slowly and gradually downhill, if possible.
- Use extra care while operating the machine with attachments; they can affect the stability of the machine. Follow the recommendations for using the machine on a slope in this *Operator's Manual*.

Maintenance and Storage

- Keep all nuts, bolts and screws tight to be sure that the equipment is in safe working condition.
- Never store the equipment with fuel in the tank inside a building, where fumes may reach an open flame or spark.
- Allow the engine to cool before storing in any enclosure.
- To reduce the fire hazard, keep the engine, silencer/muffler, battery compartment and fuel storage area free of grass, leaves, or excessive grease.
- Check the grass catcher frequently for wear or deterioration.
- Keep all parts in good working condition and all hardware and hydraulic fittings tightened. Replace all worn or damaged parts and decals.
- If the fuel tank has to be drained, do this outdoors.
- Be careful during adjustment of the machine to prevent entrapment of the fingers between moving blades and fixed parts of the machine.
- On multi-cylinder/multi-reel machines, take care as rotating one cylinder/reel can cause other cylinders/reels to rotate.
- Disengage drives, lower the cutting units, set parking brake, stop engine, and remove key from ignition. Wait for all movement to stop before adjusting, cleaning, or repairing the machine.
- Clean grass and debris from cutting units, drives, silencers/mufflers, and engine to help prevent fires. Clean up oil or fuel spills.
- Use jack stands to support components when required.

- Carefully release pressure from components with stored energy.
- Disconnect battery before making any repairs. Disconnect the negative terminal first and the positive last. Connect positive first and negative last.
- Use care when checking the cylinders/reels. Wear gloves and use caution when servicing them.
- Keep hands and feet away from moving parts. If possible, do not make adjustments with the engine running.
- Charge batteries in an open well ventilated area, away from spark and flames. Unplug charger before connecting or disconnecting from battery. Wear protective clothing and use insulated tools.

Hauling

- Use care when loading or unloading the machine into a trailer or truck.
- Use full-width ramps for loading machine into trailer or truck.
- Tie the machine down securely using straps, chains, cable, or ropes. Both front and rear straps should be directed down and outward from the machine.

Sound Power Level

These units have a guaranteed sound power level of 103 dBA, which includes an Uncertainty Value (K) of 1 dBA.

Sound power level was determined according to the procedures outlined in ISO 11094.

Sound Pressure Level

These units have a sound pressure level at the operator's ear of 86 dBA, which includes an Uncertainty Value (K) of 1 dBA.

Sound pressure level was determined according to the procedures outlined in EN ISO 5395:2013.

Vibration Level

Hand-Arm

Measured vibration level for right hand = 0.66 m/s^2

Measured vibration level for left hand = 0.98 m/s^2

Uncertainty Value (K) = 0.5 m/s^2

Measured values were determined according to the procedures outlined in EN ISO 5395:2013.

Whole Body

Measured vibration level = 0.31 m/s^2

Uncertainty Value (K) = 0.15 m/s^2

Measured values were determined according to the procedures outlined in EN ISO 5395:2013.

Engine Emission Certification

The engine in this machine is EPA Tier 4 Final and stage 3b compliant.

Safety and Instructional Decals

Safety decals and instructions are easily visible to the operator and are located near any area of potential danger. Replace any decal that is damaged or lost.

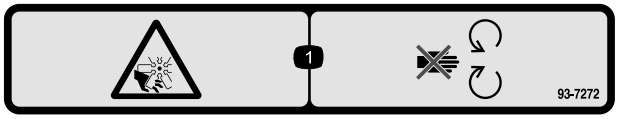

decal93-7272

93-7272

1. Cutting/dismemberment hazard, fan—stay away from moving parts.

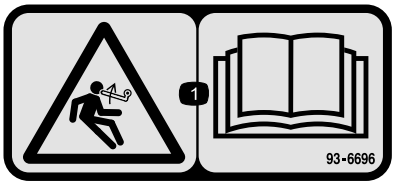

decal93-6696

93–6696

1. Stored energy hazard—read the *Operator's Manual*.

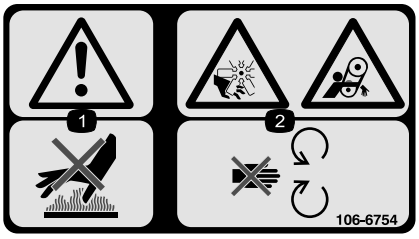

decal106-6754

106-6754

1. Warning—do not touch the hot surface.
2. Cutting/dismemberment hazard, fan and entanglement hazard, belt—stay away from moving parts.

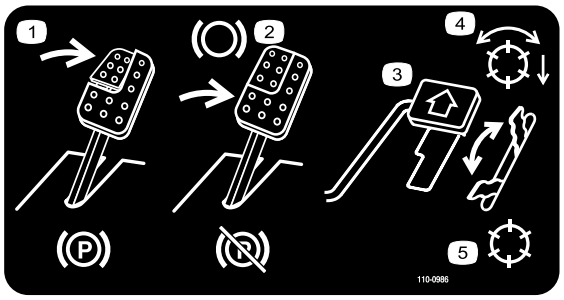

decal110-0986

110-0986

1. Press the brake pedal and parking brake pedal to set the parking brake.
2. Press the brake pedal to apply the brake.
3. Press the traction pedal to move the machine forward.
4. Reel enabled mode
5. Transport mode



decal106-6755

106-6755

1. Engine coolant under pressure.
2. Explosion hazard—read the *Operator's Manual.*
3. Warning—do not touch the hot surface.
4. Warning—read the *Operator's Manual.*

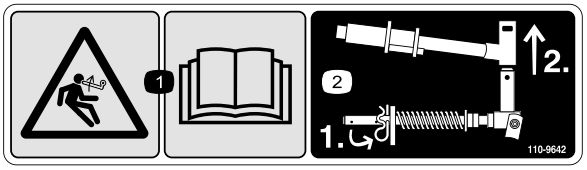

decal110-9642

110-9642

1. Stored energy hazard—read the *Operator's Manual*.
2. Move the cotter pin to the hole closest to the rod bracket and then remove the lift arm and pivot yoke.

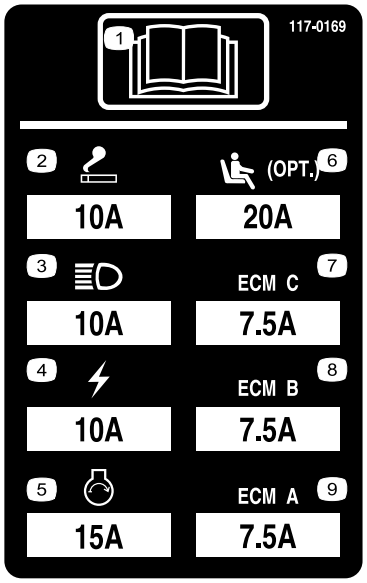

r:\decal117-0169

117–0169

1. Read the *Operator's Manual*.
2. Power point—10 A
3. Headlights—10 A
4. Power—10 A
5. Engine start—15 A
6. Optional air ride seat suspension—10 A
7. Engine computer management C—10 A
8. Engine computer management B—10 A
9. Engine computer management A—10 A

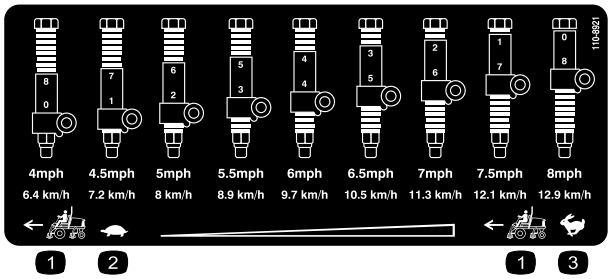

decal110-8921

110-8921

1. Traction unit speed
2. Slow
3. Fast



decal117-2718

117–2718

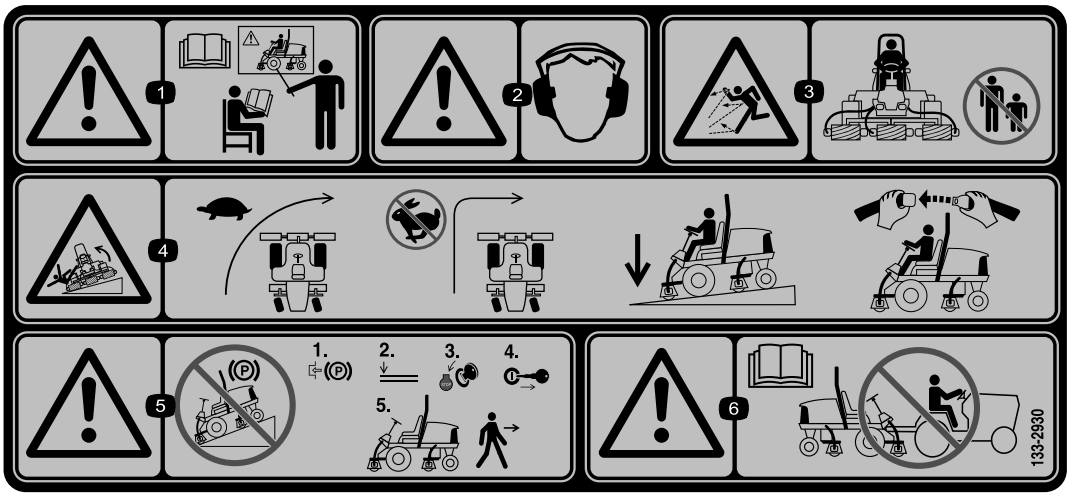

decal133-2930

133-2930

1. Warning—read the *Operator's Manual*; do not operate this machine unless you are trained.
2. Warning—wear hearing protection.
3. Thrown object hazard—keep bystanders a safe distance away from the machine.
4. Tipping hazard—slow the machine before turning; do not turn at high speeds; only drive on slopes with the cutting units lowered; always wear a seatbelt.
5. Warning—do not park on slopes; lock the parking brake, stop the engine and remove the ignition key before leaving the machine.
6. Warning—read the *Operator's Manual*; do not tow the machine.



decal133-2931

133-2931

1. Warning—read the *Operator's Manual*; do not operate this machine unless you are trained.
2. Warning—wear hearing protection.
3. Thrown object hazard—keep bystanders a safe distance away from the machine
4. Tipping hazard—do not drive across or down slopes greater than 15 degrees; only drive on slopes with the cutting units lowered; always wear a seatbelt
5. Warning—do not park on slopes; lock the parking brake, stop the engine and remove the ignition key before leaving the machine.
6. Warning—read the *Operator's Manual*; do not tow the machine.



decalbatterysymbols

Battery Symbols

Some or all of these symbols are on your battery

1. Explosion hazard
2. No fire, open flame, or smoking
3. Caustic liquid/chemical burn hazard
4. Wear eye protection
5. Read the *Operator's Manual*.
6. Keep bystanders a safe distance from the battery.
7. Wear eye protection; explosive gases can cause blindness and other injuries.
8. Battery acid can cause blindness or severe burns.
9. Flush eyes immediately with water and get medical help fast.
10. Contains lead; do not discard.

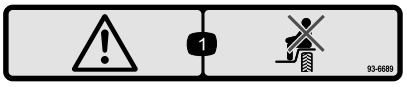

decal93-6689

93–6689

1. Danger—no riders.

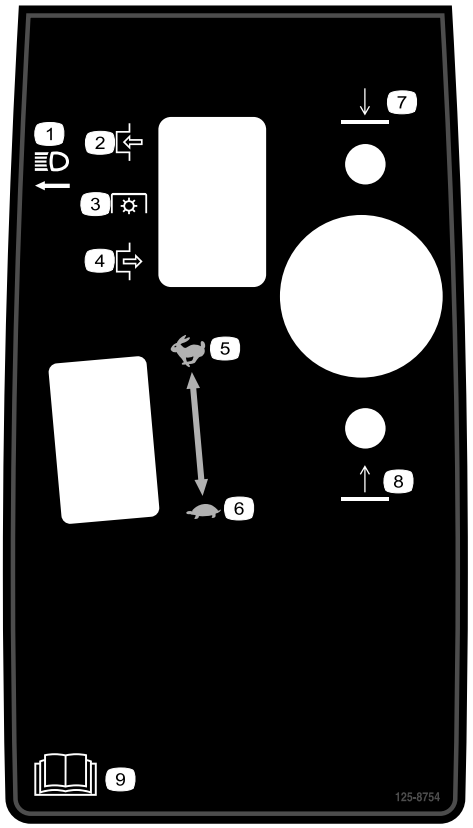

decal125-8754

125–8754

1. Headlights
2. Engage
3. Power take-off (PTO)
4. Disengage
5. Fast
6. Slow
7. Lower the cutting units
8. Raise the cutting units
9. Read the *Operator's Manual*.

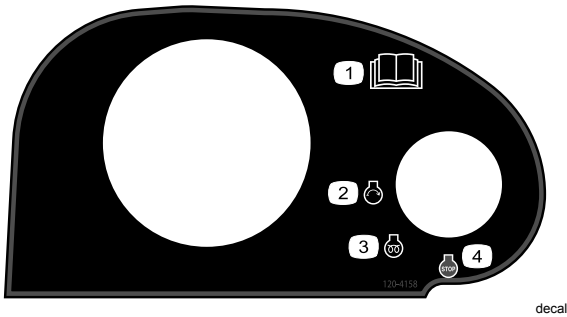

decal120-4158

120–4158

1. Read the *Operator's Manual*.
2. Engine—start
3. Engine—preheat
4. Engine—stop

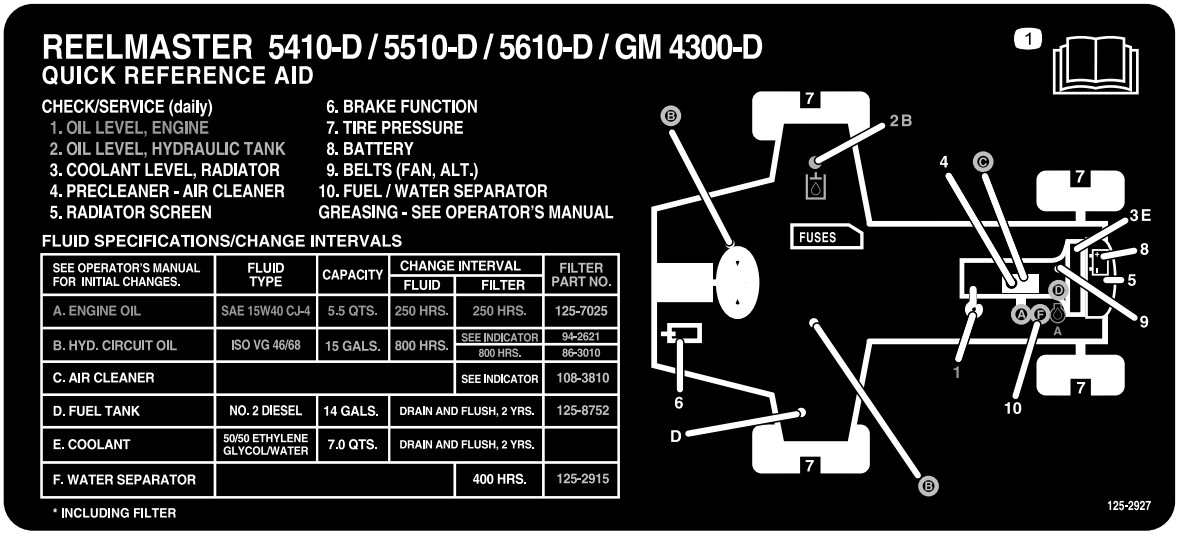

REELMASTER 5410-D / 5510-D / 5610-D / GM 4300-D
QUICK REFERENCE AID

CHECK/SERVICE (daily)
1. OIL LEVEL, ENGINE
2. OIL LEVEL, HYDRAULIC TANK
3. COOLANT LEVEL, RADIATOR
4. PRECLEANER - AIR CLEANER
5. RADIATOR SCREEN
6. BRAKE FUNCTION
7. TIRE PRESSURE
8. BATTERY
9. BELTS (FAN, ALT.)
10. FUEL / WATER SEPARATOR

GREASING - SEE OPERATOR'S MANUAL

FLUID SPECIFICATIONS/CHANGE INTERVALS

SEE OPERATOR'S MANUAL FOR INITIAL CHANGES.	FLUID TYPE	CAPACITY	CHANGE INTERVAL FLUID	CHANGE INTERVAL FILTER	FILTER PART NO.
A. ENGINE OIL	SAE 15W40 CJ-4	5.5 QTS.	250 HRS.	250 HRS.	125-7025
B. HYD. CIRCUIT OIL	ISO VG 46/68	15 GALS.	800 HRS.	SEE INDICATOR 800 HRS.	94-2621 86-3010
C. AIR CLEANER				SEE INDICATOR	108-3810
D. FUEL TANK	NO. 2 DIESEL	14 GALS.	DRAIN AND FLUSH, 2 YRS.		125-8752
E. COOLANT	50/50 ETHYLENE GLYCOL/WATER	7.0 QTS.	DRAIN AND FLUSH, 2 YRS.		
F. WATER SEPARATOR				400 HRS.	125-2915

* INCLUDING FILTER

decal125-2927

125–2927

1. Read the *Operator's Manual* for maintenance information.

Setup

Loose Parts

Use the chart below to verify that all parts have been shipped.

Procedure	Description	Qty.	Use
1	No parts required	–	Adjust the tire pressure.
2	No parts required	–	Adjust the control-arm position.
3	Right, front hose guide Left, front hose guide	1 1	Install the cutting units.
4	No parts required	–	Adjust the turf-compensation spring.
5	Cutting-unit kickstand	1	Install the cutting-unit kickstand.

Media and Additional Parts

Description	Qty.	Use
Operator's Manual	1	Read the Operator's Manual before operating the machine.
Engine Operator's Manual	1	Reference engine information.
Parts Catalog	1	Reference part numbers.
Operator training material	1	Review before operating the machine.
Cutting performance paper	1	Adjust the cutting-unit bedknife to reel.
Shim	1	Adjust the cutting-unit bedknife to reel.

Note: Determine the left and right sides of the machine from the normal operating position.

1

Adjusting the Tire Pressure

No Parts Required

Procedure

The tires are over-inflated for shipping. Therefore, release some of the air to reduce the pressure. Correct air pressure in the front and rear tires is 83 to 103 kPa (12 to 15 psi).

Important: **Maintain even pressure in all tires to ensure that there is uniform contact with the turf.**

2

Adjusting the Control-Arm Position

No Parts Required

Procedure

The control-arm position can be adjusted for your comfort.

1. Loosen the 2 bolts securing the control arm to the retaining bracket (Figure 2).

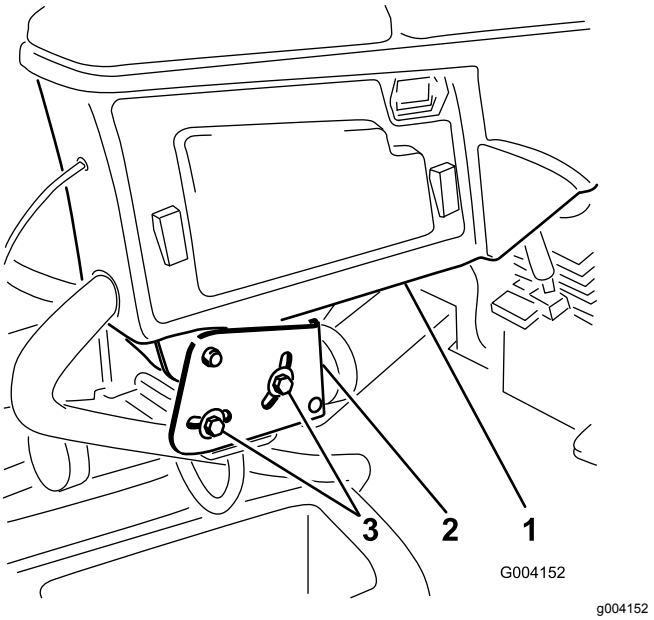

Figure 2

1. Control arm
2. Retaining brackets
3. Bolt

2. Rotate the control arm to the desired position and tighten the 2 bolts.

3

Installing the Cutting Units

Parts needed for this procedure:

1	Right, front hose guide
1	Left, front hose guide

Procedure

1. Remove the reel motors from the shipping brackets.

   Note: Discard the shipping brackets.
2. Remove the cutting units from the cartons.
3. Assemble and adjust the cutting units as described in the *Operator's Manual* for the cutting units.
4. Make sure that the counter weight (Figure 3) is installed to the proper end of each cutting unit as described in the *Operator's Manual* for the cutting units.

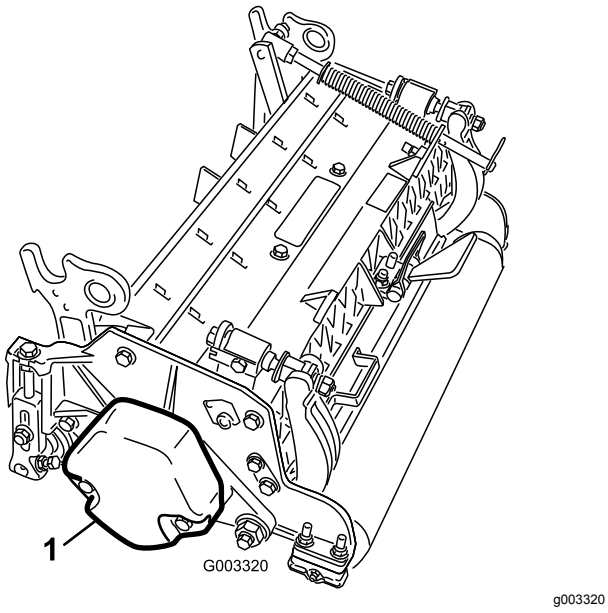

Figure 3

1. Counter weight

5. Mount the turf-compensation spring to the same side of the cutting unit as the reel-drive motor. Reposition the turf-compensation spring as follows:

   Note: All cutting units are shipped with the turf-compensation spring mounted to the right side of the cutting unit.

   A. Remove the 2 carriage bolts and nuts securing the rod bracket to the cutting-unit tabs (Figure 4).

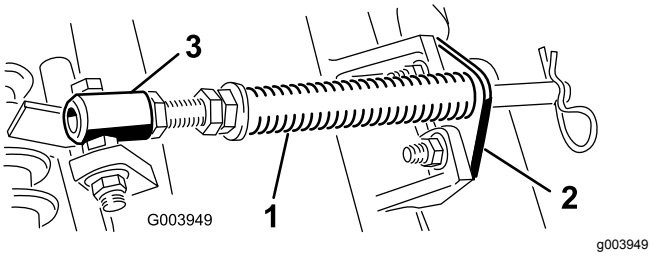

Figure 4

1. Turf-compensation spring
2. Rod bracket
3. Spring tube

   B. Remove the flange nut securing the spring-tube bolt to the carrier-frame tab (Figure 4). Remove the assembly.

   C. Mount the spring-tube bolt to the opposite tab on the carrier frame and secure with the flange nut.

   Note: Position the bolt head to the outer side of the tab as shown in Figure 5.

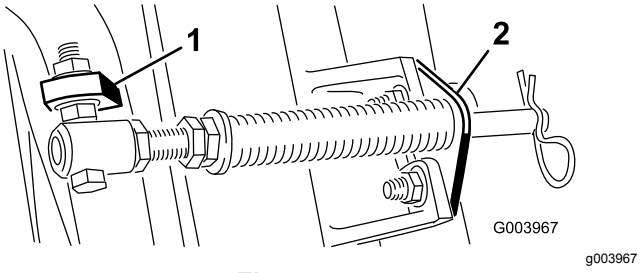

Figure 5

1. Opposite carrier-frame tab
2. Rod bracket

   D. Mount the rod bracket to the cutting-unit tabs with the carriage bolts and nuts (Figure 5).

   Important: **On cutting unit 4 (left front) and cutting unit 5 (right front), use the rod-bracket-mounting nuts to install the hose guides to the front of the cutting-unit tabs (Figure 6 and Figure 7). The hose guides should lean toward the center cutting unit (Figure 7 and Figure 8).**

   Note: When installing or removing the cutting units, make sure that the hairpin cotter is installed in the spring-rod hole next to the rod bracket. When not installing or removing the cutting units, the hairpin cotter must be installed in the hole in the end of the rod.

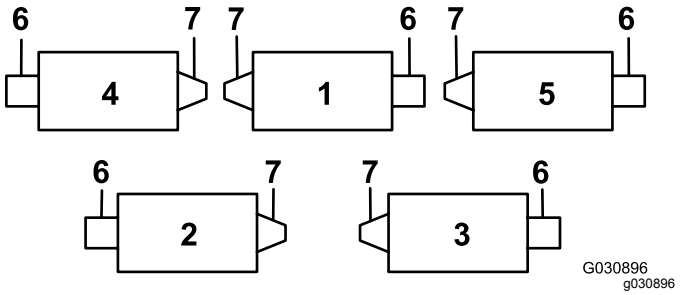

Figure 6

1. Cutting unit 1
2. Cutting unit 2
3. Cutting unit 3
4. Cutting unit 4
5. Cutting unit 5
6. Reel motor
7. Weight

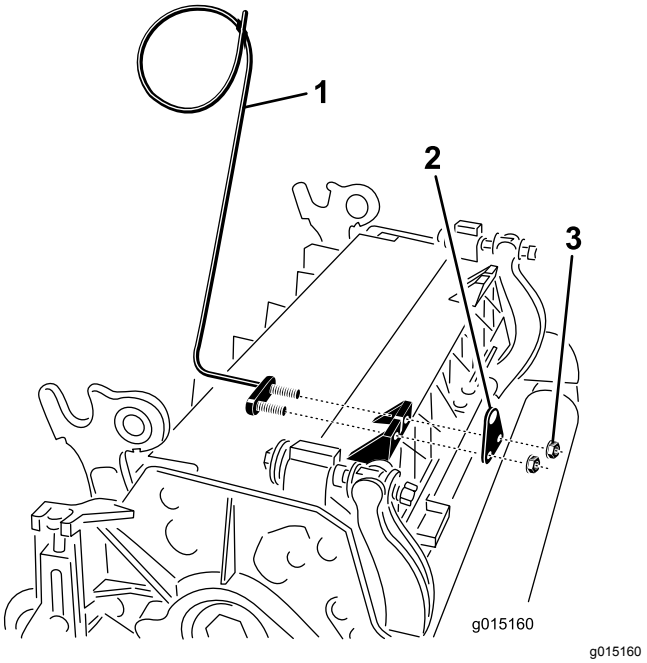

Figure 7

1. Hose guide (cutting unit 4 shown)
2. Rod bracket
3. Nut

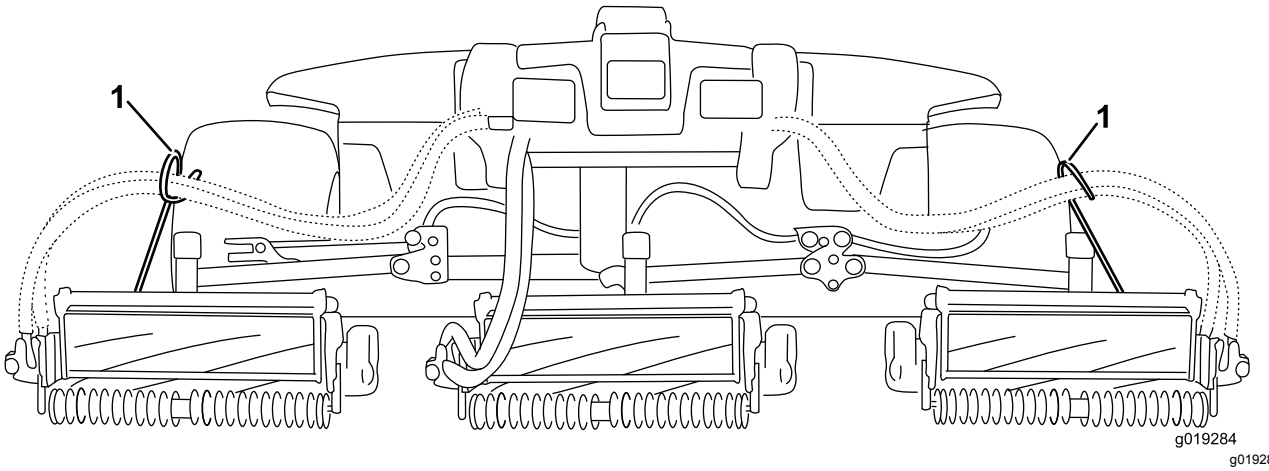

Figure 8

1. Hose guides must lean toward the center cutting unit.

6. Lower all lift arms completely.
7. Remove the snapper pin and the cap from the lift-arm-pivot yoke (Figure 9).

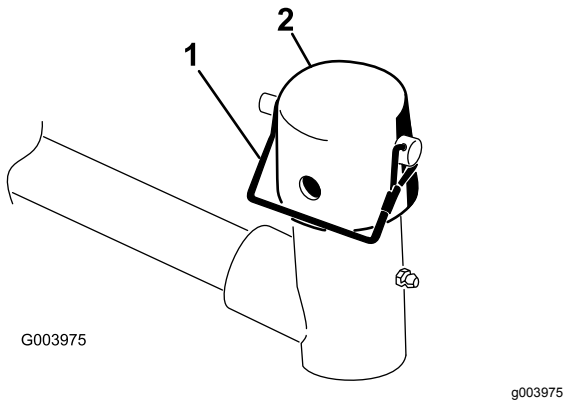

Figure 9

1. Snapper pin
2. Cap

8. For the front cutting units, slide a cutting unit under the lift arm while inserting the carrier-frame shaft up into the lift-arm-pivot yoke (Figure 10).

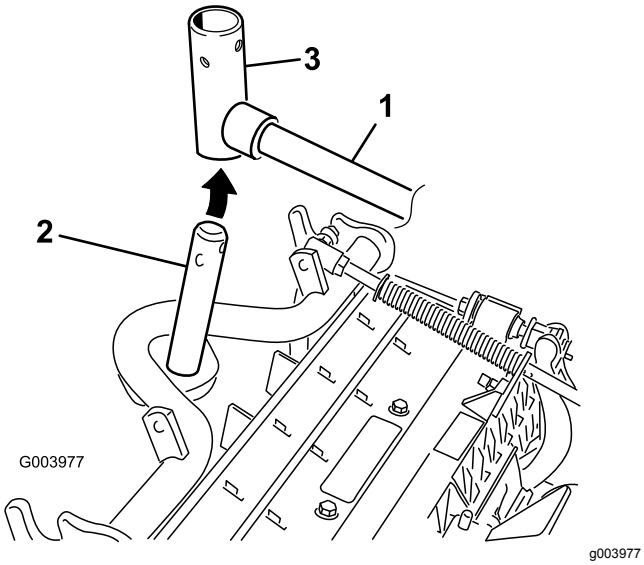

Figure 10

1. Lift arm
2. Carrier-frame shaft
3. Lift-arm-pivot yoke

9. Use the following procedure on the rear cutting units when the height of cut is above 19 mm (3/4 inch).
   A. Remove the lynch pin and washer securing the lift-arm-pivot shaft to the lift arm and slide the lift-arm-pivot shaft out of the lift arm (Figure 11).

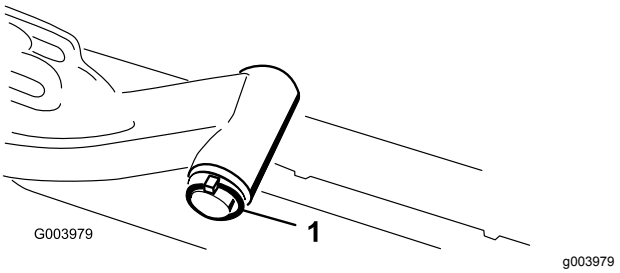

Figure 11

1. Lynch pin and washer

   B. Insert the lift-arm yoke onto the carrier-frame shaft (Figure 10).
   C. Insert the lift-arm shaft into the lift arm and secure it with the washer and lynch pin (Figure 11).
10. Insert the cap over the carrier-frame shaft and lift-arm yoke.
11. Secure the cap and the carrier-frame shaft to the lift-arm yoke with the snapper pin (Figure 9).

    Note: Use the slot if a steering cutting unit is desired or use the hole if the cutting unit is to be locked in position
12. Secure the lift-arm chain to the chain bracket with the snapper pin (Figure 12).

    Note: Use the number of chain links described in the *Operator's Manual* for the cutting unit.

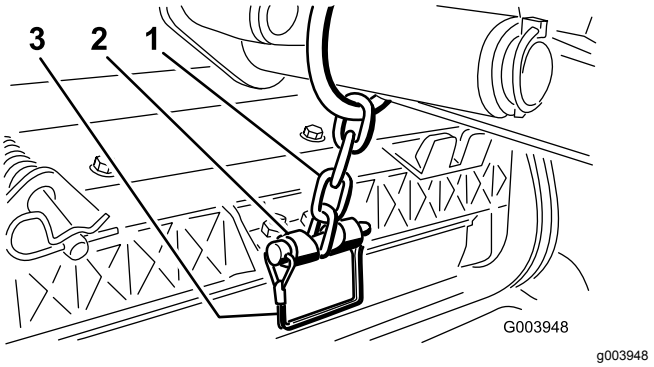

Figure 12

1. Lift-arm chain
2. Chain bracket
3. Pin

13. On cutting unit 4 (left front) and cutting unit 5 (right front), insert the reel-motor hoses into the respective hose guide.
14. Coat the spline shaft of the reel motor with clean grease.
15. Oil the reel-motor O-ring and install it onto the motor flange.
16. Install the motor by rotating it clockwise so that the motor flanges clear the bolts (Figure 13).

Note: Rotate the motor counterclockwise until the flanges encircle the bolts and then tighten the bolts.

Important: **Make sure that the reel-motor hoses are not twisted, kinked, or at risk of being pinched.**

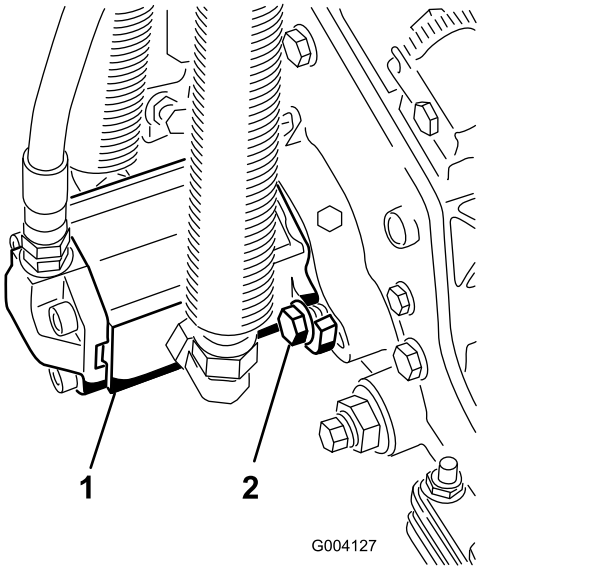

Figure 13

1. Reel-drive motor
2. Mounting bolts

4

Adjusting the Turf-Compensation Spring

No Parts Required

Procedure

The turf-compensation spring transfers weight from the front to the rear roller (Figure 14). This helps to reduce a wave pattern in the turf, also known as marcelling or bobbing.

Important: **Make spring adjustments with the cutting unit mounted to the traction unit, pointing straight ahead and lowered to the ground.**

1. Make sure that the hairpin cotter is installed in the rear hole in the spring rod (Figure 14).

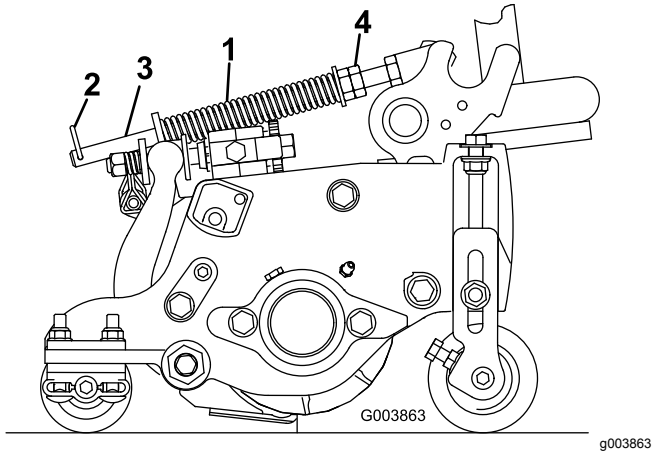

Figure 14

1. Turf-compensation spring
2. Hairpin cotter
3. Spring rod
4. Hex nuts

2. Tighten the hex nuts on the front end of the spring rod until the compressed length of the spring is 12.7 cm (5 inches) for 5-inch cutting units or 15.9 cm (6.25 inches) for 7-inch cutting units (Figure 14).

   Note: When operating on rough terrain, decrease the spring length by 12.7 mm (1/2 inch). This slightly decreases the ground following.

5

Using the Cutting-Unit Kickstand

Parts needed for this procedure:

1	Cutting-unit kickstand

Procedure

Whenever you need to tip the cutting unit to expose the bedknife/reel, prop up the rear of the cutting unit with the kickstand to make sure that the nuts on the back end of the bedbar-adjusting screws are not resting on the work surface (Figure 15).

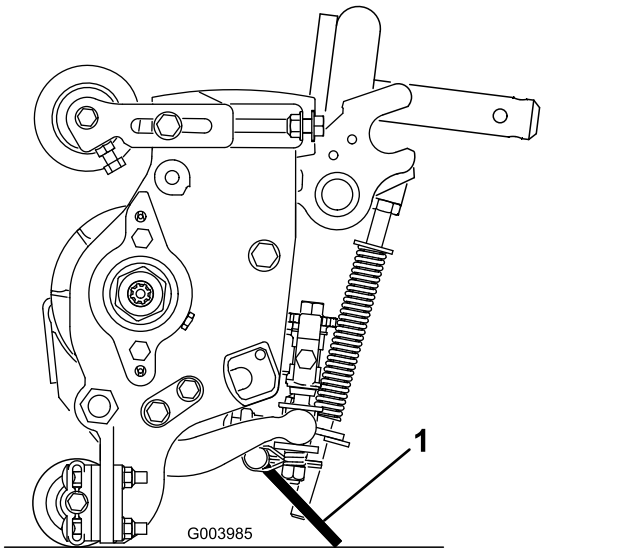

g003985

Figure 15

1. Cutting-unit kickstand

Secure the kickstand to the chain bracket with the snapper pin (Figure 16).

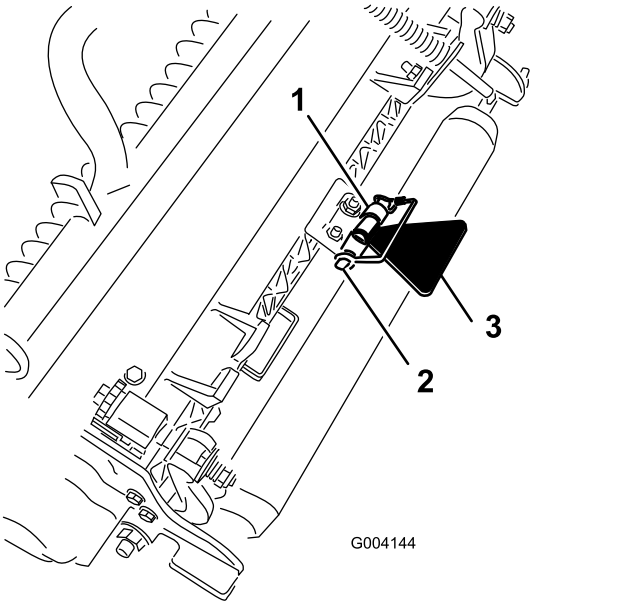

g004144

Figure 16

1. Chain bracket
2. Snapper pin
3. Cutting-unit kickstand

Product Overview

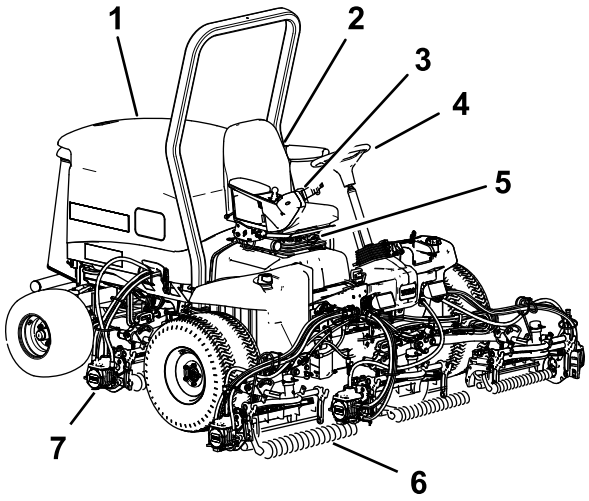

g216864

Figure 17

1. Engine hood
2. Seat
3. Control arm
4. Steering wheel
5. Seat adjustments
6. Front cutting units
7. Rear cutting units

Controls

Seat-Adjusting Knobs

The seat-adjusting lever allows you to adjust the seat forward and rearward (Figure 18). The weight-adjusting knob adjusts the seat for your weight. The weight gauge indicates when the seat is adjusted to the weight of the operator. The height-adjusting knob adjusts the seat for your height.

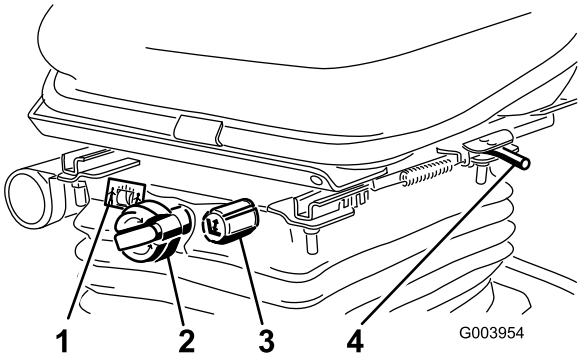

g003954

Figure 18

1. Weight gauge
2. Weight-adjusting knob
3. Height-adjusting knob
4. Adjusting lever

Traction Pedal

The traction pedal controls the forward and reverse operation (Figure 19). Press the top of the pedal to move forward and the bottom to move rearward. Ground speed depends on how far you press the pedal. For no load, maximum ground speed, set the engine speed to the FAST position and fully press the pedal.

To stop, reduce foot pressure on the traction pedal and allow it to return to the center position.

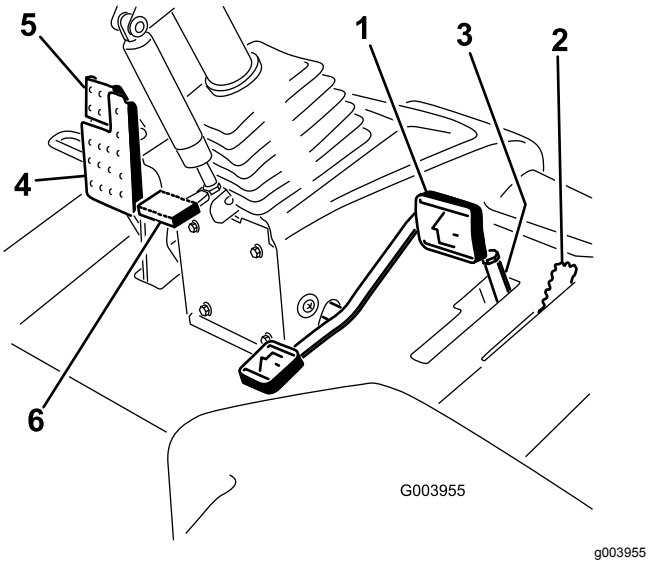

Figure 19

1. Traction pedal
2. Mow-speed limiter
3. Spacers
4. Brake pedal
5. Parking brake
6. Tilt-steering pedal

Mow-Speed Limiter

When the mow-speed limiter is flipped up, it controls the mow speed and allows the cutting units to be engaged (Figure 19). Each spacer adjusts the mowing speed by 0.8 km/h (0.5 mph). The more spacers you have on the top of the bolt, the slower the mowing speed. To transport the machine, flip back the mow-speed limiter for the maximum transport speed.

Brake Pedal

Press the brake pedal to stop the machine (Figure 19).

Parking Brake

To engage the parking brake, push down on the brake pedal and press the top forward to latch (Figure 19). To release the parking brake, press the brake pedal until the parking-brake latch retracts.

Tilt-Steering Pedal

To tilt the steering wheel toward you, press the foot pedal down, pull the steering tower toward you to the most comfortable position, and release the pedal (Figure 19).

Engine-Speed Switch

The engine-speed switch has 2 modes to change the engine speed (Figure 20). By momentarily tapping the switch, you can change the engine speed in 100 rpm increments. If you hold the switch down, the engine automatically moves to High or Low idle, depending on which end of the switch you press.

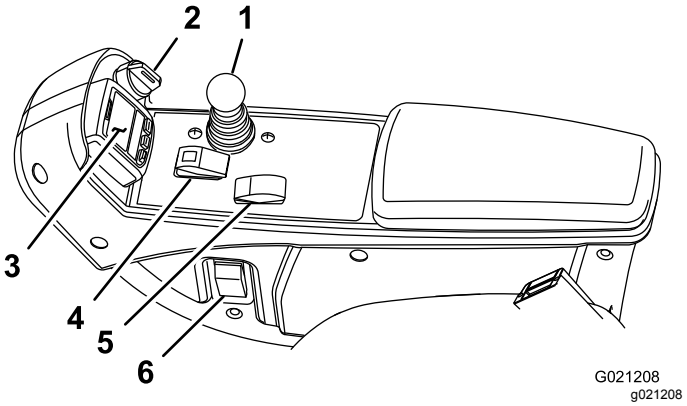

Figure 20

1. Lower mow/raise control lever
2. Key switch
3. InfoCenter
4. Enable/disable switch
5. Engine-speed switch
6. Headlight switch

Enable/Disable Switch

Use the enable/disable switch in conjunction with the lower mow/raise control lever to operate the cutting units (Figure 20).

InfoCenter

The InfoCenter LCD display shows information about your machine, such as the operating status, various diagnostics, and other information about the machine (Figure 20).

Key Switch

The key switch has 3 positions: OFF, ON/RUN, and START (Figure 20).

Lower Mow/Raise Control Lever

This lever raises and lowers the cutting units and also starts and stops the cutting units when the cutting units are enabled in the MOW mode (Figure 20). You

cannot lower the cutting units when the mow/transport lever is in the TRANSPORT position.

Headlight Switch

Pivot the switch downward to turn on the headlights (Figure 20).

Backlap Levers

Use the backlap levers in conjunction with the lower mow/raise control lever for backlapping the reels (Figure 21).

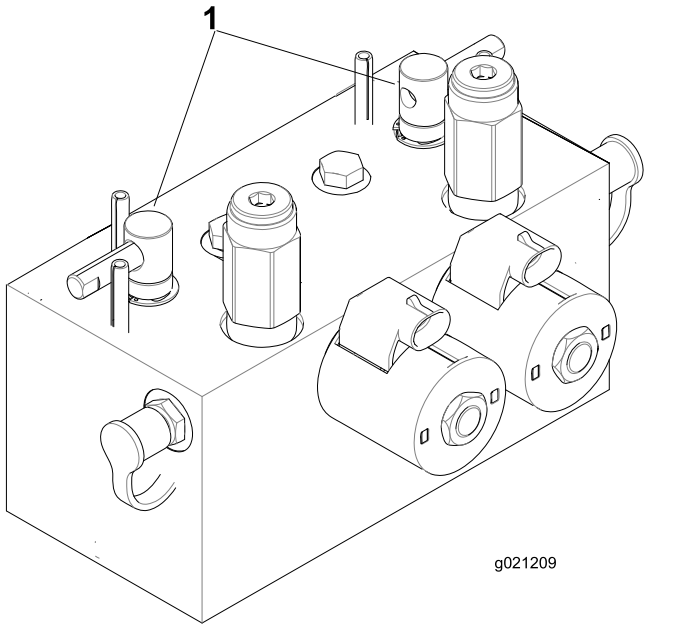

Figure 21

1. Backlap levers

Hydraulic-Filter-Restriction Indicator

With the engine running at normal operating temperature, ensure that the indicator is in the green zone (Figure 22). When the indicator is in the red zone, change the hydraulic filters.

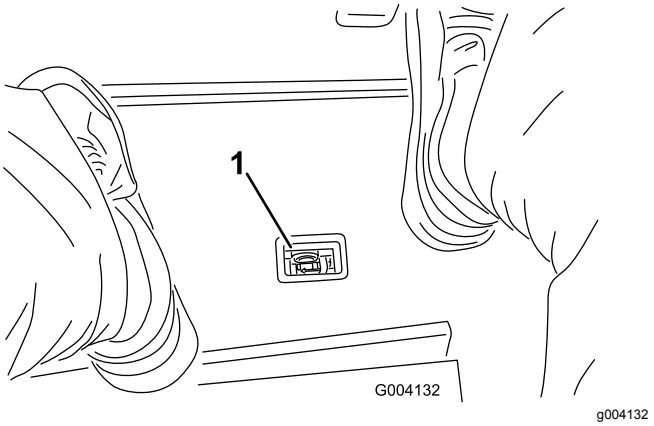

Figure 22

1. Hydraulic-filter-restriction indicator

Power Point

The power point is a 12 V power supply for electronic devices (Figure 23).

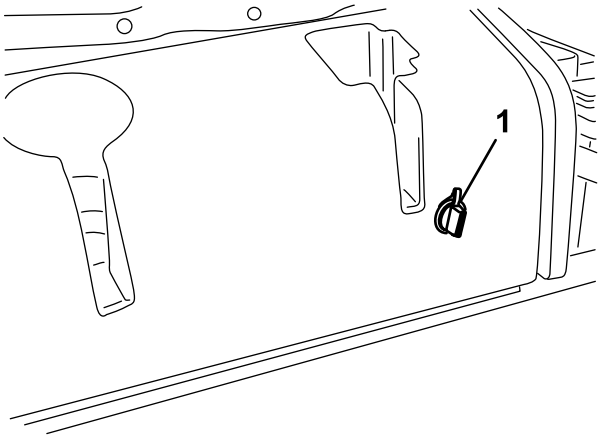

Figure 23

1. Power point

Using the InfoCenter LCD Display

The InfoCenter LCD display shows information about your machine, such as the operating status, various diagnostics, and other information about the machine (Figure 24). There is a splash screen and main information screen of the InfoCenter. You can switch between the splash screen and main information screen, at any time, by pressing any of the InfoCenter buttons and then selecting the appropriate directional arrow.

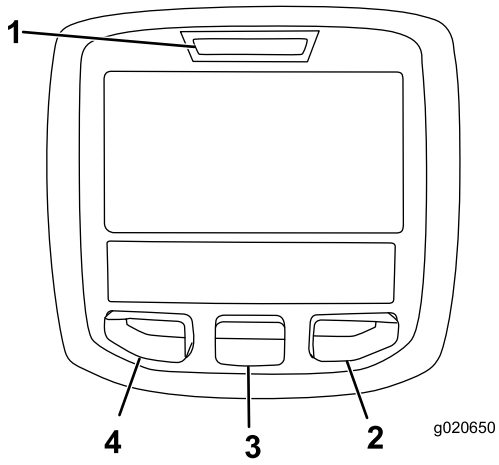

g020650

Figure 24

1. Indicator light
2. Right button
3. Middle button
4. Left button

- Left Button, Menu Access/Back Button— Press this button to access the InfoCenter menus. You can use it to back out of any menu you are currently using.
- Middle Button— Press this button to scroll down menus.
- Right Button— Press this button to open a menu where a right arrow indicates additional content.

Note: The purpose of each button may change depending on what is required at the time. Each button is labeled with an icon displaying its current function.

InfoCenter Icon Description

SERVICE DUE	Indicates when scheduled service should be performed
	Engine rpm/status—indicates the engine speed (rpm)
	Hour meter
	Info icon
	Fast
	Slow
	Fuel level
	Stationary regeneration is required.
	The glow plugs are active.
	Raise the cutting units.
	Lower the cutting units.
	Sit in the seat.
	Parking brake is On.
H	The range is high (transport).
N	Neutral
L	The range is low (mow).
	Engine-coolant temperature (°C or °F)
	Temperature (hot)
	The PTO is engaged.
	Not allowed
	Start the engine.
	Stop the engine.

	Engine
	Key switch
	The cutting units are lowering.
	The cutting units are raising.
PIN	PIN code
CAN	CAN bus
	InfoCenter
Bad	Bad or failed
	Bulb
OUT	Output of TEC controller or control wire in harness
	Switch
	Release the switch.
	Change to the indicated state.
Symbols are often combined to form sentences. Some examples are shown below	
N	Put the machine into Neutral.
	Engine start is denied.
STOP	Engine shutdown
	Engine coolant is too hot.
48.1g/l	DPF ash-accumulation notification—Refer to Servicing the Diesel-Oxidation Catalyst (DOC) and the Soot Filter (page 53) for details.
or	Sit down or set parking brake

Using the Menus

To access the InfoCenter menu system, press the menu access button while at the main screen. This brings you to the main menu. Refer to the following tables for a synopsis of the options available from the menus:

Main Menu	
Menu Item	**Description**
Faults	Contains a list of the recent machine faults. Refer to the *Service Manual* or contact your Toro Distributor for more information on the Faults menu and the information contained there.
Service	Contains information on the machine such as hours of use counters and other similar numbers.
Diagnostics	Displays the state of each machine switch, sensor and control output. You can use this to troubleshoot certain issues as it quickly tells you which machine controls are on and which are off.
Settings	Allows you to customize and modify configuration variables on the InfoCenter display.
About	Lists the model number, serial number, and software version of your machine.

Service	
Menu Item	**Description**
Hours	Lists the total number of hours that the machine, engine and PTO have been on, as well as the number of hours the machine has been transported and service due.
Counts	Lists numerous counts the machine has experienced.

Diagnostics	
Menu Item	**Description**
Cutting Units	Indicates the inputs, qualifiers and outputs for raising and lowering the cutting units.
Hi/Low Range	Indicates the inputs, qualifiers and outputs for driving in transport mode.
PTO	Indicates the inputs, qualifiers and outputs for enabling the PTO circuit.
Engine Run	Indicates the inputs, qualifiers and outputs for starting the engine.
Backlap	Indicates the inputs, qualifiers and outputs for operating the backlap function.

Settings	
Menu Item	**Description**
Units	Controls the units used on the InfoCenter. The menu choices are English or Metric
Language	Controls the language used on the InfoCenter*.
LCD Backlight	Controls the brightness of the LCD display.
LCD Contrast	Controls the contrast of the LCD display.
Front Backlap Reel Speed	Controls the speed of the front reels in backlap mode.
Rear Backlap Reel Speed	Controls the speed of the rear reels in backlap mode.
Protected Menus	Allows a person authorized by your company with the PIN code to access protected menus.
Auto Idle	Controls the amount of time allowed before returning the engine to low idle when the machine is stationary.
Blade Count	Controls the number of blades on the reel for reel speed.
Mow Speed	Controls the ground speed for determining the reel speed.
Height of cut (HOC)	Controls the height of cut (HOC) for determining the reel speed.
F Reel RPM	Displays the calculated reel speed position for the front reels. The reels can also be manually adjusted.
R Reel RPM	Displays the calculated reel speed position for the rear reels. The reels can also be manually adjusted.

* Only "operator-faced" text is translated. Faults, Service, and Diagnostics screens are "service-faced." Titles appear in the selected language, but menu items are in English.

About	
Menu Item	**Description**
Model	Lists the model number of the machine.
SN	Lists the serial number of the machine.
Machine-Controller Revision	Lists the software revision of the master controller.
InfoCenter Revision	Lists the software revision of the InfoCenter.
CAN Bus	Lists the machine communication bus status.

Protected Menus

There are 8 operating configuration settings that are adjustable within the Settings Menu of the InfoCenter: auto idle time delay, Blade Count, Mow Speed, Height of Cut (HOC), F Reel RPM, and R Reel RPM. These settings can be locked by using the Protected Menu.

Note: At the time of delivery, the initial password code is programmed by your distributor.

Accessing Protected Menus

Note: The factory default PIN code for you machine is either 0000 or 1234.

If you changed the PIN code and forgot the code, contact your Authorized Toro Distributor for assistance.

1. From the MAIN MENU, use the center button to scroll down to the SETTINGS MENU and press the right button (Figure 25).

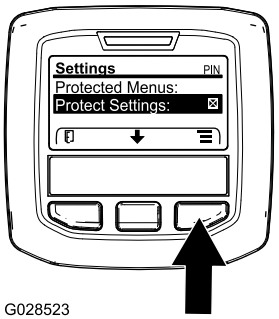

Figure 25

2. In the SETTINGS MENU, use the center button to scroll down to the PROTECTED MENU and press the right button (Figure 26A).

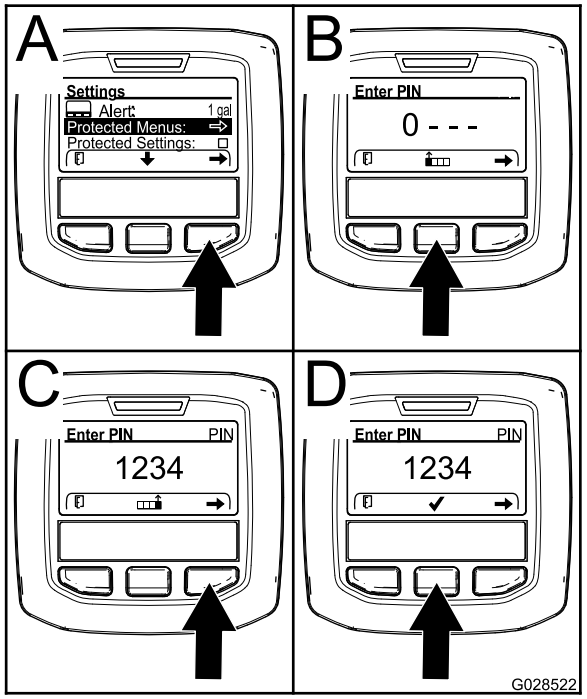

g028522

Figure 26

3. To enter the PIN code, press the center button until the correct first digit appears, then press the right button to move on to the next digit (Figure 26B and Figure 26C). Repeat this step until the last digit is entered and press the right button once more.
4. Press the middle button to enter the PIN code (Figure 26D).

   Wait until the red indicator light of the InfoCenter illuminates.

   Note: If the InfoCenter accepts the PIN code and the protected menu is unlocked, the word "PIN" displays in the upper right corner of the screen.

Note: Rotate the key switch to the OFF position and then to the ON position locks the protected menu.

You have the ability to view and change the settings in the Protected Menu. Once you access the Protected Menu, scroll down to Protect Settings option. Use the right button to change the setting. Setting the Protect Settings to OFF allows you to view and change the settings in the Protected Menu without entering the PIN code. Setting the Protect Settings to ON hides the protected options and requires you to enter the PIN code to change the setting in the Protected Menu. After you set the PIN code, rotate the key switch OFF and back to the ON position to enable and save this feature.

Viewing and Changing the Protected Menu Settings

1. In the Protected Menu, scroll down to Protect Settings.
2. To view and change the settings without entering a passcode, use the right button to change the Protect Settings to OFF.
3. To view and change the settings with a passcode, use the left button to change the Protect Settings to ON, set the passcode, and turn the key in the ignition switch to the OFF position and then to the ON position.

Setting the Auto Idle

1. In the Settings Menu, scroll down to Auto Idle.
2. Press the right button to change the auto idle time between OFF, 8S, 10S, 15S, 20S, and 30S.

Setting the Blade Count

1. In the Settings Menu, scroll down to Blade Count.
2. Press the right button to change the blade count between 5, 8, or 11 blade reels.

Setting the Mow Speed

1. In the Settings Menu, scroll down to Mow Speed.
2. Press the right button to select mow speed.
3. Use the center and right button to select the appropriate mow speed set on the mechanical mow-speed limiter on the traction pedal.
4. Press the left button to exit mow speed and save the setting.

Setting the Height of Cut (HOC)

1. In the Settings Menu, scroll down to HOC.
2. Press the right button to select HOC.
3. Use the center and right button to select the appropriate HOC setting. (If the exact setting is not displayed, select the nearest HOC setting from the list displayed).
4. Press the left button to exit HOC and save the setting.

Setting the Front and Rear Reel Speeds

Although the front and rear reel speeds are calculated by inputting the number of blades, mow speed and HOC into the InfoCenter, the setting can be manually changed to accommodate for different mowing conditions.

1. To change the Reel Speed Settings, scroll down to the F Reel RPM, R Reel RPM, or both.
2. Press the right button to change the reel speed value. As you change the speed setting, the display continues to show the calculated reel speed based on blade count, mow speed and HOC, which was previously entered, but the new value is also displayed.

Specifications

Note: Specifications and design are subject to change without notice.

Specification	ReelMaster® 5410-D	ReelMaster® 5510-D
Transport width	228 cm (90 inches)	233 cm (92 inches)
Width of cut	254 cm (100 inches)	254 cm (100 inches)
Length	282 cm (111 inches)	282 cm (111 inches)
Height	160 cm (63 inches)	160 cm (63 inches)
Weight (with fluids and 8 blade cutting units installed)	1,335 kg (2,943 lb)	1,420 kg (3,131 lb)
Engine	Yanmar 36 hp	Yanmar 36 hp
Fuel-tank capacity	53 L (14 US gallons)	53 L (14 US gallons)
Transport speed	0 to 16 km/h (0 to 10 mph)	0 to 16 km/h (0 to 10 mph)
Mowing speed	0 to 13 km/h (0 to 8 mph)	0 to 13 km/h (0 to 8 mph)

Attachments/Accessories

A selection of Toro approved attachments and accessories is available for use with the machine to enhance and expand its capabilities. Contact your Authorized Service Dealer or Distributor or go to www.Toro.com for a list of all approved attachments and accessories.

To best protect your investment and maintain optimal performance of your Toro equipment, count on Toro genuine parts. When it comes to reliability, Toro delivers replacement parts designed to the exact engineering specification of our equipment. For peace of mind, insist on Toro genuine parts.

Operation

Note: Determine the left and right sides of the machine from the normal operating position.

⚠ CAUTION

If you leave the key in the ignition switch, someone could accidently start the engine and seriously injure you or other bystanders.

Lower the cutting units to the ground, set the parking brake, and remove the key from the ignition switch before servicing or making adjustments to the machine.

Think Safety First

Carefully read all safety instructions and symbols in the safety section. Knowing this information could help you or bystanders avoid injury.

⚠ DANGER

Operating the machine on wet grass or steep slopes can cause sliding and loss of control.

- **Reduce speed and use extreme caution on slopes.**
- **Do not operate the machine near water.**

⚠ DANGER

Wheels dropping over edges can cause rollovers, which may result in serious injury, death, or drowning.

Do not operate the machine near drop-offs.

⚠ DANGER

Operating the machine while the roll bar is down may lead to serious injury or death in the event of a rollover.

Always keep the roll bar in the fully raised and locked position and use the seat belt.

⚠ CAUTION

This machine produces sound levels that can cause hearing loss through extended periods of exposure.

Wear hearing protection when operating this machine.

The use of protective equipment for eyes, ears, hands, feet, and head is recommended.

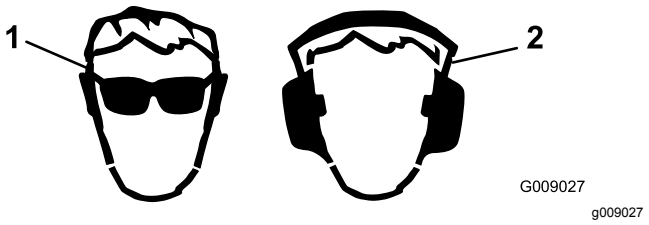

Figure 27

1. Wear eye protection.
2. Wear hearing protection.

Checking the Engine-Oil Level

Before you start the engine and use the machine, check the oil level in the engine crankcase; refer to Checking the Engine-Oil Level (page 52).

Filling the Fuel Tank

⚠ DANGER

In certain conditions, fuel is extremely flammable and highly explosive. A fire or explosion from fuel can burn you and others and can damage property.

- **Fill the fuel tanks outdoors, in an open area, when the engine is cold. Wipe up any fuel that spills.**
- **Never fill the fuel tanks inside an enclosed trailer.**
- **Never smoke when handling fuel and stay away from an open flame or where fuel fumes may be ignited by a spark.**
- **Store fuel in an approved container and keep it out of the reach of children. Never buy more than a 30-day supply of fuel.**
- **Do not operate without entire exhaust system in place and in proper working condition.**

⚠ DANGER

In certain conditions during fueling, static electricity can be released, causing a spark that can ignite the fuel vapors. A fire or explosion from fuel can burn you and others and can damage property.

- **Always place fuel containers on the ground away from your vehicle before filling.**
- **Do not fill fuel containers inside a vehicle or on a truck or trailer bed, because interior carpets or plastic truck bed liners may insulate the container and slow the loss of any static charge.**
- **When practical, remove equipment from the truck or trailer and refuel the equipment with its wheels on the ground.**
- **If this is not possible, then refuel such equipment on a truck or trailer from a portable container rather than from a fuel-dispenser nozzle.**
- **If you must use a fuel-dispenser nozzle, keep the nozzle in contact with the rim of the fuel tank or container opening at all times until fueling is complete.**

⚠ WARNING

Fuel is harmful or fatal if swallowed. Long-term exposure to vapors can cause serious injury and illness.

- **Avoid prolonged breathing of vapors.**
- **Keep your face away from the nozzle and fuel tank opening.**
- **Keep fuel away from your eyes and skin.**

Fuel Specification

Important: **Use only ultra-low sulphur diesel fuel. Fuel with higher rates of sulfur degrades the diesel oxidation catalyst (DOC), which causes operational problems and shortens the service life of engine components.**

Failure to observe the following cautions may damage the engine.

- Never use kerosene or gasoline instead of diesel fuel.
- Never mix kerosene or used engine oil with the diesel fuel.
- Never keep fuel in containers with zinc plating on the inside.
- Do not use fuel additives.

Petroleum Diesel

Cetane rating: 45 or higher

Sulfur content: Ultra-low sulfur (<15 ppm)

Fuel Table

Diesel fuel specification	Location
ASTM D975 No. 1-D S15 No. 2-D S15	USA
EN 590	European Union
ISO 8217 DMX	International
JIS K2204 Grade No. 2	Japan
KSM-2610	Korea

- Use only clean, fresh diesel fuel or biodiesel fuels.
- Purchase fuel in quantities that can be used within 180 days to ensure fuel freshness.

Use summer-grade diesel fuel (No. 2-D) at temperatures above -7°C (20°F) and winter-grade fuel (No. 1-D or No. 1-D/2-D blend) below that temperature.

Note: Use of winter-grade fuel at lower temperatures provides lower flash point and cold flow characteristics which eases starting and reduces fuel filter plugging.

Using summer-grade fuel above -7°C (20°F) contributes toward longer fuel pump life and increased power compared to winter-grade fuel.

Biodiesel

This machine can also use a biodiesel blended fuel of up to B20 (20% biodiesel, 80% petroleum diesel).

Sulfur content: Ultra-low sulfur (<15 ppm)

Biodiesel fuel specification: ASTM D6751 or EN14214

Blended fuel specification: ASTM D975, EN590, or JIS K2204

Important: **The petroleum diesel portion must be ultra-low sulfur.**

Observe the following precautions:

- Biodiesel blends may damage painted surfaces.
- Use B5 (biodiesel content of 5%) or lesser blends in cold weather.
- Monitor seals, hoses, gaskets in contact with fuel as they may be degraded over time.
- Fuel filter plugging may be expected for a time after converting to biodiesel blends.
- Contact your Authorized Toro Distributor if you wish for more information on biodiesel.

Fuel Tank Capacity

53 L (14 US gallons)

Adding Fuel

1. Park the machine on a level surface.
2. Using a clean rag, clean area around fuel-tank cap.
3. Remove the cap from the fuel tank (Figure 28).

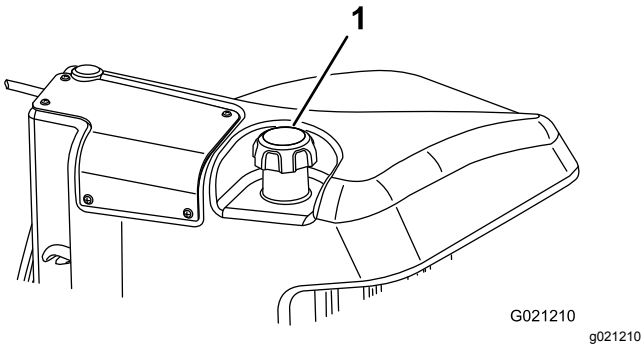

Figure 28

1. Fuel-tank cap

4. Fill the tank until the level is 6 to 13 mm (1/4 to 1/2 inch) below the bottom of the filler neck.
5. Install the fuel-tank cap tightly after filling the tank.

   Note: If possible, fill the fuel tank after each use. This minimizes possible buildup of condensation inside the fuel tank.

Checking the Cooling System

Service Interval: Before each use or daily

Clean debris off the screen, oil cooler, and front of the radiator daily and more often if conditions are extremely dusty and dirty. Refer to Removing Debris from the Cooling System (page 57).

The cooling system is filled with a 50/50 solution of water and permanent ethylene glycol antifreeze. Check the level of coolant in the expansion tank at the beginning of each day before starting the engine. The capacity of the cooling system is 6.6 L (7.0 US qt).

⚠ CAUTION

If the engine has been running, the pressurized, hot coolant can escape and cause burns.

- **Do not open the radiator cap when the engine is running.**
- **Use a rag when opening the radiator cap, and open the cap slowly to allow steam to escape.**

1. Check the level of coolant in the expansion tank (Figure 29).

   The coolant level should be between the marks on the side of the tank.

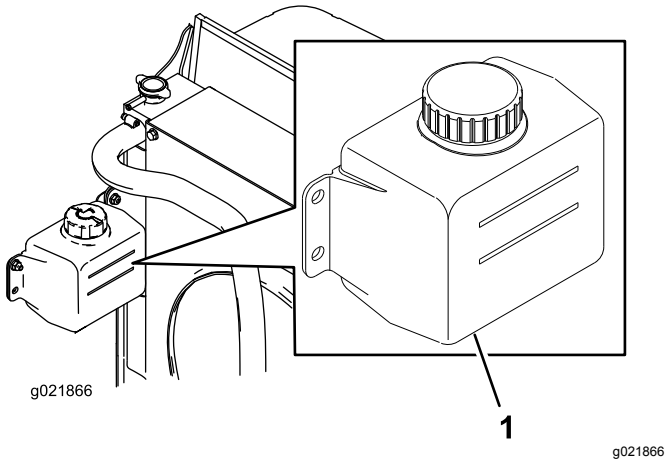

Figure 29

1. Expansion tank

2. If the coolant level is low, remove the expansion-tank cap and replenish the system. **Do not overfill.**
3. Install the expansion-tank cap.

Checking the Hydraulic Fluid

Service Interval: Before each use or daily

The machines reservoir is filled at the factory with approximately 30 L (8 US gallons) of high-quality hydraulic fluid. Check the level of the hydraulic fluid before the engine is first started and daily thereafter. The recommended replacement fluid is as follows:

> **Toro Premium All Season Hydraulic Fluid** (Available in 19 L (5 US gallon) pails or 208 L (55 US gallon) drums. See the *Parts Catalog* or your Toro Distributor for part numbers.)

Alternate fluids: If the Toro fluid is not available, other fluids may be used provided they meet all the following material properties and industry specifications. We do not recommend the use of synthetic fluid. Consult with your lubricant distributor to identify a satisfactory product.

Note: Toro does not assume responsibility for damage caused by improper substitutions, so use only products from reputable manufacturers who stand behind their recommendation.

High Viscosity Index/Low Pour Point Anti-wear Hydraulic Fluid, ISO VG 46

Material Properties:

Viscosity, ASTM D445	cSt @ 40°C 44 to 50 cSt @ 100°C 7.9 to 8.5
Viscosity Index ASTM D2270	140 to 160
Pour Point, ASTM D97	-36.6°C (-34°F) to 9.4°C (-49°F)

Industry Specifications:

Vickers I-286-S (Quality Level), Vickers M-2950-S (Quality Level), Denison HF-0

Important: **The ISO VG 46 Multigrade fluid has been found to offer optimal performance in a wide-range of temperature conditions. For operation in consistently high ambient temperatures, 18°C (65°F) to 49°C (120°F), ISO VG 68 hydraulic fluid may offer improved performance.**

Premium Biodegradable Hydraulic Fluid-Mobil EAL EnviroSyn 46H

Important: **Mobil EAL EnviroSyn 46H is the only synthetic biodegradable fluid approved by Toro. This fluid is compatible with the elastomers used in Toro hydraulic systems and is suitable for a wide-range of temperature conditions. This fluid is compatible with conventional mineral oils, but for maximum biodegradability and performance the hydraulic system should be thoroughly flushed of conventional fluid. The oil is available in 19 L (5 US gallon) containers or 208 L (55 US gallon) drums from your Mobil Distributor.**

Important: **Many hydraulic fluids are almost colorless, making it difficult to spot leaks. A red dye additive for the hydraulic system oil is available in 20 ml (2/3 oz) bottles. 1 bottle is sufficient for 15 to 22 L (4 to 6 gallons) of hydraulic oil. Order Part Number 44-2500 from your Toro Distributor. This red dye is not recommended for use with biodegradable fluids. Use food coloring.**

1. Position the machine on a level surface, lower the cutting units, and stop the engine.
2. Clean the area around filler neck and cap of the hydraulic tank (Figure 30). Remove the cap from the filler neck.

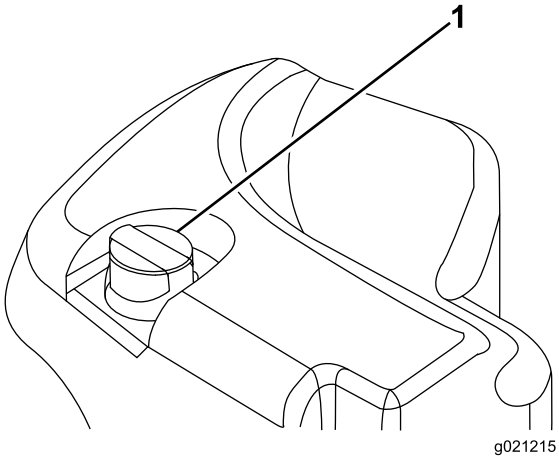

g021215

Figure 30

1. Hydraulic-tank cap

3. Remove the dipstick from the filler neck and wipe it with a clean rag.
4. Insert the dipstick into the filler neck; then remove it and check the level of the fluid.

   Note: The fluid level should be within 6.3 mm (1/4 inch) of the mark on the dipstick.

   Important: **Do not overfill.**
5. If the level is low, add appropriate fluid to raise the level to the FULL mark.
6. Install the dipstick and cap onto the filler neck.

Checking the Reel-to-Bedknife Contact

Service Interval: Before each use or daily

Each day before operating, check reel-to-bedknife contact, regardless if the quality of cut had previously been acceptable. There must be light contact across the full length of the reel and the bedknife (refer to Adjusting the Reel to Bedknife in the *Operator's Manual* for the cutting units).

Check the Torque of the Wheel Nuts

Service Interval: After the first hour

After the first 10 hours

Every 250 hours

Torque the wheel nuts to 94 to 122 N-m (70 to 90 ft-lb).

⚠ WARNING

Failure to maintain proper torque of the wheel nuts could result in personal injury.

Burnishing the Brakes

To ensure optimum performance of the parking-brake system, burnish (break in) the brakes before use. Set the forward traction speed to 6.4 km/h (4 mph) to match the reverse traction speed (all 8 spacers moved to the top of the mow-speed control). With the engine at high idle, proceed forward with the mow-speed-control stop engaged and ride the brake for 15 seconds. Proceed backward at full reverse speed and ride the brake for 15 seconds. Repeat this 5 times, waiting 1 minute between each forward and reverse cycle to avoid overheating the brakes; refer to Adjusting the Parking Brakes (page 58).

Starting and Stopping the Engine

Important: **The fuel system automatically bleeds itself when any of the following situations occur:**

- Initial start-up of a new machine.
- The engine has ceased running due to lack of fuel.
- Maintenance has been performed upon the fuel system components.

Starting the Engine

1. Sit on the seat, keep your foot off the traction pedal so that it is in NEUTRAL, engage the parking brake, set the engine-speed switch to the MIDDLE position, and ensure that the Enable/Disable switch is in the DISABLE position.
2. Remove your foot from the traction pedal and make sure that the pedal is in the NEUTRAL position.
3. Turn the ignition key to the RUN position.
4. When the glow indicator dims, turn the ignition key to the START position. Release the key immediately when the engine starts and allow it to return to the RUN position. Allow the engine to warm up (without load), then move the throttle control to the desired position.

Stopping the Engine

1. Move all controls to NEUTRAL, set the parking brake, move the engine-speed switch to the low idle position and allow the engine to reach low idle speed.
2. Turn the key to the OFF position and remove it from the switch.

Cutting Grass with the Machine

Note: Cutting grass at a rate that loads the engine promotes DPF regeneration.

1. Move the machine to the job site and align the machine outside the cutting area for the first cutting pass.
2. Ensure that the PTO switch is set to the DISABLE position.
3. Move the lever for the mow-speed limiter forward.
4. Press the throttle-speed switch to set the engine speed to HIGH IDLE.
5. Use the joystick to lower the cutting units to the ground.
6. Press the PTO switch to prepare cutting units for operation.
7. Use the joystick to raise the cutting units off the ground.
8. Begin moving the machine toward the cutting area and lower the cutting units.

   Note: Cutting grass at a rate that loads the engine promotes DPF regeneration.
9. When you complete the mowing pass, use the joystick to lift the cutting units.
10. Perform a tear-shaped turn to quickly line up for your next pass.

Diesel Particulate Filter Regeneration

The diesel particulate filter (DPF) is part of the exhaust system. The diesel-oxidation catalyst of the DPF reduces harmful gasses and the soot filter removes soot from the engine exhaust.

The DPF regeneration process uses heat from the engine exhaust to incinerate the soot accumulated on

the soot filter, converting the soot to ash, and clears the channels of the soot filter so that filtered engine exhaust flows out the DPF.

The engine computer monitors the accumulation of soot by measuring the back pressure in the DPF. If the back pressure is too high, soot is not incinerating in the soot filter through normal engine operation. To keep the DPF clear of soot, remember the following:

- Passive regeneration occurs continuously while the engine is running—run the engine at full engine speed when possible to promote DPF regeneration.
- If the back pressure is too high, the engine computer signals you through the InfoCenter when additional processes (assist and reset regeneration) are running.
- Allow the assist and reset regeneration process to complete before shutting off the engine.

Operate and maintain your machine with the function of the DPF in mind. Engine load at high idle engine speed generally produce adequate exhaust temperature for DPF regeneration.

Important: **Minimize the amount of time that you idle the engine or operate the engine at low-engine speed to help reduce the accumulation of soot in the soot filter.**

⚠ CAUTION

The exhaust temperature is hot (approximately 600°C (1112°F) during DPF parked regeneration or recovery regeneration. Hot exhaust gas can harm you or other people.

- **Never operate the engine in an enclosed area.**
- **Make sure that there are no flammable materials around the exhaust system.**
- **Never touch a hot exhaust system component.**
- **Never stand near or around the exhaust pipe of the machine.**

DPF Soot Accumulation

- Over time, the DPF accumulates soot in the soot filter. The computer for the engine monitors the soot level in the DPF.
- When enough soot accumulates, the computer informs you that it is time to regenerate the diesel particulate filter.
- DPF regeneration is a process that heats the DPF to convert the soot to ash.
- In addition to the warning messages, the computer reduces the power produced by the engine at different soot-accumulation levels.

Engine Warning Messages—Soot Accumulation

Indication Level	Fault Code	Engine Power Rating	Recommended Action
Level 1: Engine Warning	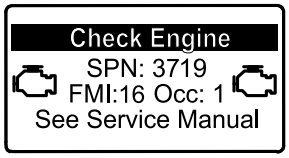 g213866 **Figure 31** Check Engine SPN 3719, FMI 16	The computer de-rates the engine power to 85%	Perform a parked regeneration as soon as possible; refer to Parked Regeneration (page 35).
Level 2: Engine Warning	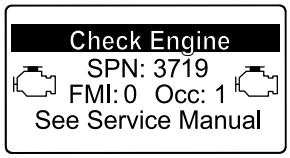 g213867 **Figure 32** Check Engine SPN 3719, FMI 0	The computer de-rates the engine power to 50%	Perform a recovery regeneration as soon as possible; refer to Recovery Regeneration (page 38).

DPF Ash Accumulation

- The lighter ash is discharged through the exhaust system; the heavier ash collects in the soot filter.
- Ash is a residue of the regeneration process. Over time, the diesel particulate filter accumulates ash that does not discharge with the engine exhaust.
- The computer for the engine calculates the amount of ash accumulated in the DPF.
- When enough ash accumulates, the engine computer sends information to the InfoCenter in the form of a system advisory or an engine fault to indicate the accumulation of ash in the DPF.
- The advisory and faults are indications that it is time to service the DPF.
- In addition to the warnings, the computer reduces the power produced by the engine at different ash-accumulation levels.

InfoCenter Advisory and Engine Warning Messages—Ash Accumulation

Indication Level	Advisory or Fault Code	Engine Speed Reduction	Engine Power Rating	Recommended Action
Level 1: System Advisory	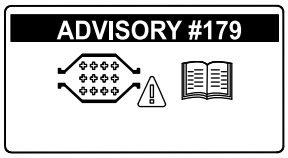 g213865 **Figure 33** Advisory #179	None	100%	Notify your service department that advisory #179 displays in the InfoCenter.
Level 2: Engine Warning	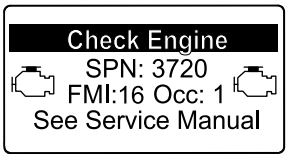 g213863 **Figure 34** Check Engine SPN 3720, FMI 16	None	The computer de-rates the engine power to 85%	Service the DPF; refer to Servicing the Diesel-Oxidation Catalyst (DOC) and the Soot Filter (page 53)
Level 3: Engine Warning	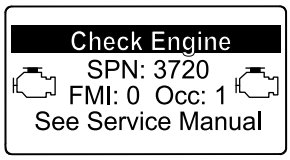 g213864 **Figure 35** Check Engine SPN 3720, FMI 0	None	The computer de-rates the engine power to 50%	Service the DPF; refer to Servicing the Diesel-Oxidation Catalyst (DOC) and the Soot Filter (page 53)
Level 4: Engine Warning	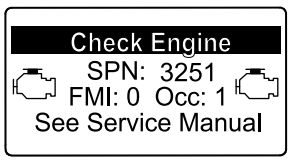 g214715 **Figure 36** Check Engine SPN 3251, FMI 0	Engine speed at max torque + 200 rpm	The computer de-rates the engine power to 50%	Service the DPF; refer to Servicing the Diesel-Oxidation Catalyst (DOC) and the Soot Filter (page 53)

Types of Diesel Particulate Filter Regeneration

Types of diesel particulate filter regeneration that are performed while the machine is operating:

Type of Regeneration	Conditions for DPF regeneration	DPF description of operation
Passive	Occurs during normal operation of the machine at high-engine speed or high-engine load	The InfoCenter does not display an icon indicating passive regeneration. During passive regeneration, the DPF processes high-heat exhaust gasses; oxidizing harmful emissions and burning soot to ash. Refer to Passive DPF Regeneration (page 34).
Assist	Occurs as a result of low-engine speed, low-engine load, or after the computer detects back pressure in the DPF	 When the assist/reset-regeneration icon is displayed in the InfoCenter, an assist regeneration is in progress. During assist regeneration, the computer controls the intake throttle to increase the exhaust temperature, enabling assist regeneration to occur. Refer to Assist DPF Regeneration (page 34).
Reset	Occurs after assist regeneration only if the computer detects that assist regeneration did not sufficiently reduce the soot level Also occurs every 100 hours to reset baseline sensor readings	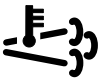 When the assist/reset-regeneration icon is displayed in the InfoCenter, a regeneration is in progress. During reset regeneration, the computer controls the intake throttle and fuel injectors to increase the exhaust temperature during regeneration. Refer to Reset Regeneration (page 35).

Types of diesel particulate filter regeneration that require you to park the machine:

Type of Regeneration	Conditions for DPF regeneration	DPF description of operation
Parked	Soot buildup occurs as a result of prolonged operation at low-engine speed or low-engine load. May also occur as a result of using incorrect fuel or oil The computer detects back pressure due to soot buildup and requests a parked regeneration	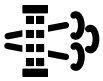 When the parked-regeneration icon is displayed in the InfoCenter, a regeneration is requested. • Perform the parked regeneration as soon as possible to avoid needing a recovery regeneration. • A parked regeneration requires 30 to 60 minutes to complete. • You must have at least a 1/4 tank of fuel in the tank. • You must park the machine to perform a recovery regeneration. Refer to Parked Regeneration (page 35).

Types of diesel particulate filter regeneration that require you to park the machine: (cont'd.)

Type of Regeneration	Conditions for DPF regeneration	DPF description of operation
Recovery	Occurs as a result of ignoring parked regeneration requests and continuing operation, adding more soot when the DPF is already in need of a parked regeneration	When the recovery-regeneration icon 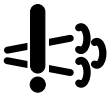 is displayed in the InfoCenter, a recovery regeneration is requested. Contact your Authorized Toro Distributor to have a service technician perform the recovery regeneration. • A recovery regeneration requires up to 4 hours to complete. • You must have at least a 1/2 tank of fuel in the machine. • You must park the machine to perform a recovery regeneration. Refer to Recovery Regeneration (page 38).

Passive DPF Regeneration

- Passive regeneration occurs as part of normal engine operation.
- While operating the machine, run the engine at full-engine speed when possible to promote DPF regeneration.

Assist DPF Regeneration

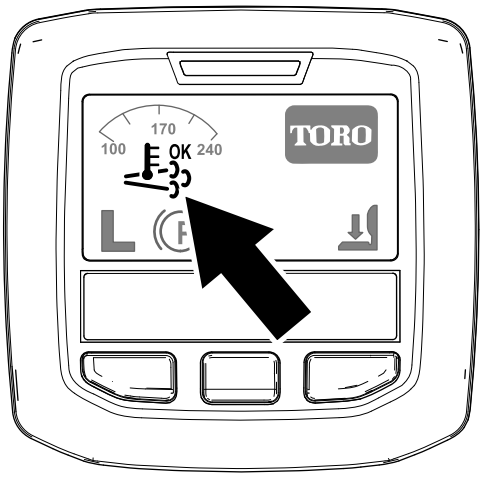

g214711

Figure 37
Assist/reset-regeneration icon

- The assist/reset-regeneration icon displays in the InfoCenter (Figure 37).
- The computer takes control of the intake throttle to increase the temperature of the engine exhaust.
- While operating the machine, run the engine at full engine speed when possible to promote DPF regeneration.
- The 

icon displays in the InfoCenter while the assist regeneration is processing.
- Whenever possible, do not shut off the engine or reduce engine speed while the assist regeneration is processing.

Important: **Allow the machine to complete the assist regeneration process before shutting off the engine.**

Note: The assist regeneration is finished processing when the 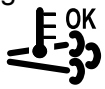

icon disappears from the InfoCenter.

Reset Regeneration

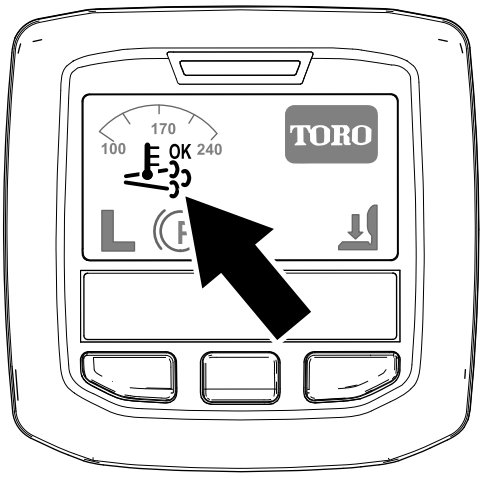

g214711

Figure 38
Assist/reset-regeneration icon

- The assist/reset-regeneration icon displays in the InfoCenter (Figure 38).
- The computer takes control of the intake throttle and changes the fuel injection operation to increase the temperature of the engine exhaust.

  Important: **The assist/reset-regeneration icon indicates that the exhaust temperature discharged from of your machine may be hotter than during regular operation.**
- While operating the machine, run the engine at full engine speed when possible to promote DPF regeneration.
- The 

icon displays in the InfoCenter while the reset regeneration is processing.
- Whenever possible, do not shut off the engine or reduce engine speed while the reset regeneration is processing.

  Important: **Allow the machine to complete the reset regeneration process before shutting off the engine.**

  Note: The reset regeneration is finished processing when the 

icon disappears from the InfoCenter.

Parked Regeneration

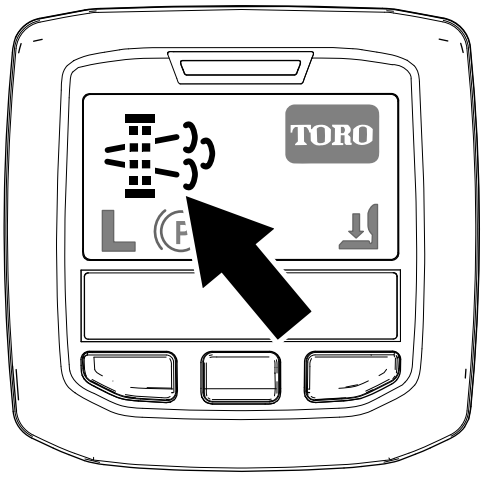

g214713

Figure 39
Parked-regeneration request icon

- The parked-regeneration requested icon displays in the InfoCenter (Figure 39).
- If a parked regeneration is needed, the InfoCenter displays engine warning SPN 3719, FMI 16 (Figure 40) and the engine computer derates engine power to 85%.

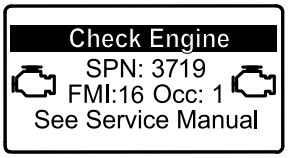

g213866

Figure 40

Important: **If you do not complete a parked regeneration within 2 hours, the engine computer derates engine power to 50%.**

- A parked regeneration requires 30 to 60 minutes to complete.
- If you are authorized by your company, you need the PIN code to perform the parked-regeneration process.

Preparing to Perform a Parked or Recovery Regeneration

1. Ensure that the machine has at least 1/4 tank of fuel.
2. Move the machine outside to an area away from combustible materials.
3. Park the machine on a level surface.
4. Ensure that the traction control or motion-control levers are in the NEUTRAL position.
5. If applicable, lower the cutting units and shut them off.

6. Engage the parking brake.
7. Set the throttle to the low IDLE position.

Performing a Parked Regeneration

Note: For instructions on unlocking protected menus, refer to Accessing Protected Menus (page 22).

1. Access the protected menu and unlock the protected settings submenu (Figure 41); refer to Accessing Protected Menus (page 22).

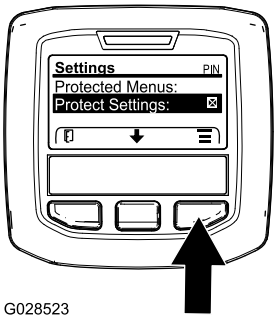

g028523

Figure 41

2. Navigate to the MAIN MENU, press the center button to scroll down to the SERVICE MENU, and press the right button to select the SERVICE option (Figure 42).

   Note: The InfoCenter should display the PIN indicator in the upper right corner of the display.

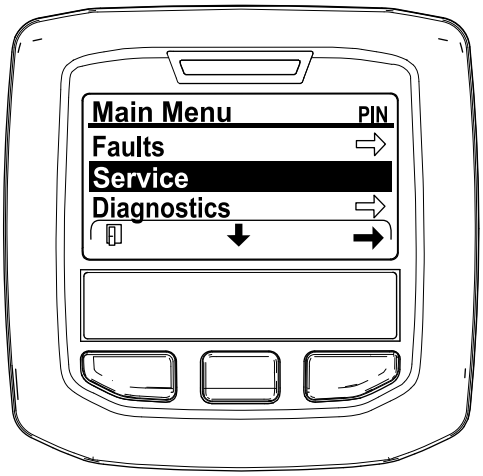

g212371

Figure 42

3. In the SERVICE MENU, press the middle button until the DPF REGENERATION options displays, and press the right button to select the DPF REGENERATION option (Figure 43).

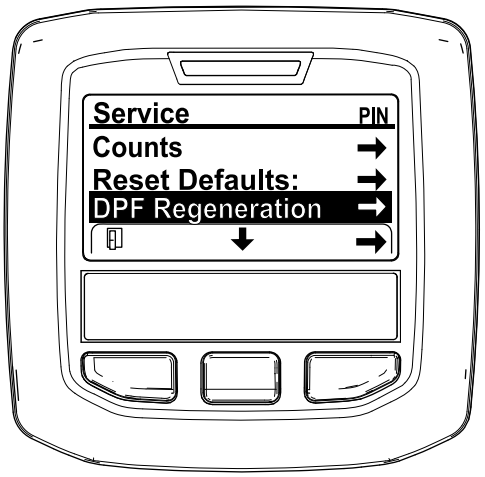

g212138

Figure 43

4. When the “Initiate DPF Regen. Are you sure?” message displays, press the center button (Figure 44).

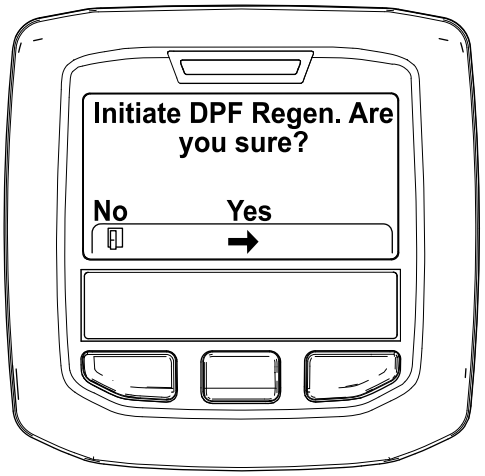

g212125

Figure 44

5. If the coolant temperature is below 60°C (140°F) the “Insure is running and above 60C/140F” message displays. (Figure 45).

   Observe the temperature in the display, and run the machine at full throttle until the temperature reaches 60°C (140°F), then press the center button.

   Note: If the coolant temperature is above 60°C (140°F) this screen is skipped.



g211986

Figure 45

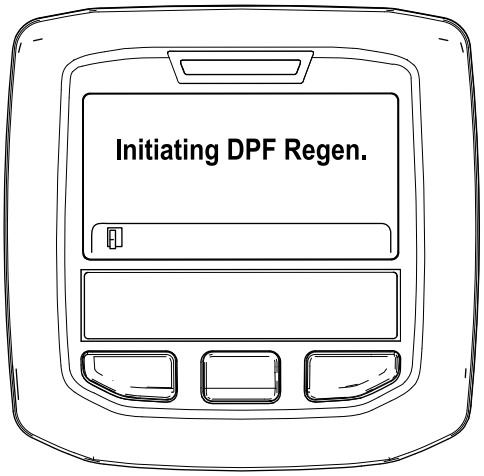

g212405

Figure 47

6. Move the throttle control to LOW IDLE and press the center button (Figure 46).

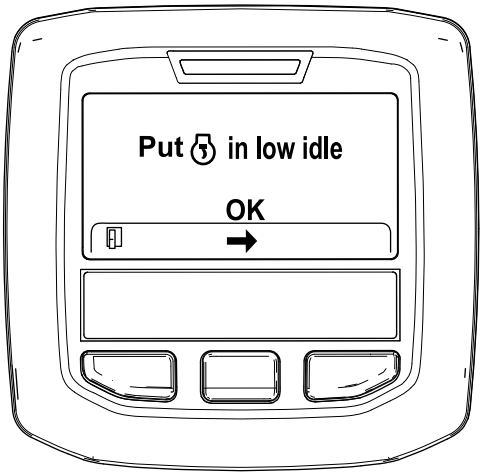

g212372

Figure 46

7. The following messages display as the parked regeneration process begins:
   A. The “Initiating DPF Regen.” message displays (Figure 47).
   B. The “Waiting on ” message displays (Figure 48).



g212406

Figure 48

   C. The computer determines whether the regeneration runs. One of the following messages displays in the InfoCenter:
      - If the regeneration is allowed, the “Regen Initiated. Allow up to 30 minutes for completion” message displays in the InfoCenter, wait for the machine to complete the parked regeneration process (Figure 49).

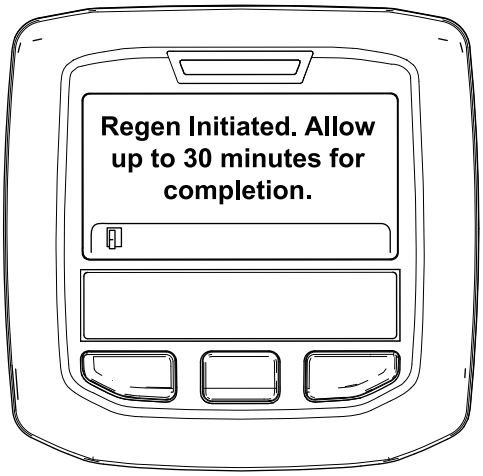

g213424

Figure 49

- If the regeneration process is not allowed by the engine computer, the “DPF Regen Not Allowed” message displays in the InfoCenter (Figure 50). Press the left button to exit to the home screen

  Important: **If you did not meet all the requirements for regeneration or if less than 50 hours have passed since the last regeneration, the “DPF Regen Not Allowed” message appears.**

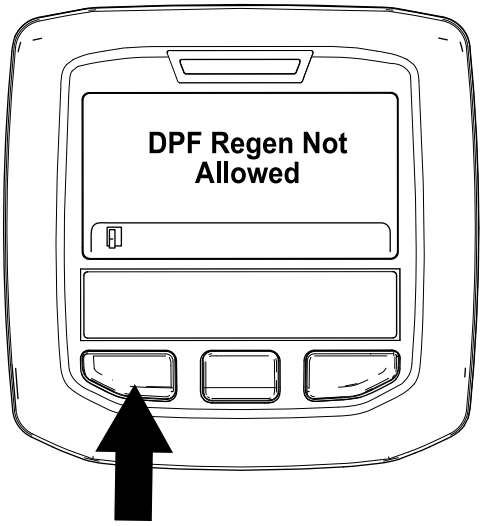

g212410

Figure 50

8. While the regeneration is running, the InfoCenter returns to the home screen and shows the following icons:



The engine is cold—wait.



The engine is warm—wait.



The engine hot—regeneration in progress (percent complete).

9. The parked regeneration is complete when the “Regen Complete” message displays in the InfoCenter. Press the left button to exit to the home screen (Figure 51).

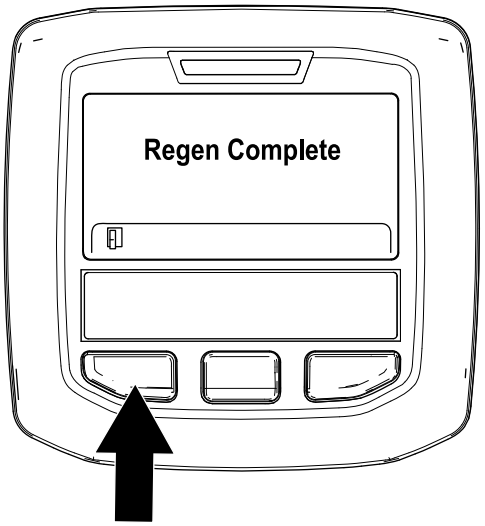

g212404

Figure 51

Recovery Regeneration

- If you ignore the request for a parked regeneration (displayed in the InfoCenter) and continue to operate the machine, a critical amount of soot builds up in the DPF.
- If a recovery regeneration is needed, the InfoCenter displays engine warning SPN 3719, FMI 16 (Figure 52) and the engine computer derates engine power to 85%.

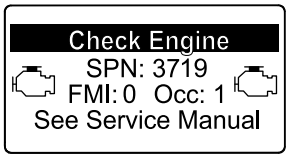

g213867

Figure 52

Important: **If you do not complete a recovery regeneration within 15 minutes, the engine computer derates engine power to 50%.**

- Perform a recovery-regeneration whenever there is a loss of engine power and a parked regeneration cannot effectively clean the DPF of soot.
- A recovery regeneration requires up to 4 hours to complete.
- You need a distributor technician to perform the recovery regeneration process; contact your Authorized Toro Distributor.

Adjusting the Lift-Arm Counterbalance

You can adjust the counterbalance on the rear cutting-unit lift arms to compensate for different turf conditions and to maintain a uniform height of cut in the rough conditions or in areas of thatch buildup.

You can adjust each counterbalance spring to 1 of 4 settings. Each increment increases or decreases counterbalance on the cutting unit by 2.3 kg (5 lb). You can position the springs on the back side of the first spring actuator to remove all counter balance (fourth position).

1. Position the machine on a level surface, lower the cutting units, stop the engine, engage the parking brakes, and remove the key from the ignition switch.
2. Insert a tube or similar object onto the long spring end and pivot it around the spring actuator to the desired position (Figure 53).

⚠ CAUTION

The springs are under tension.

Use caution when adjusting them.

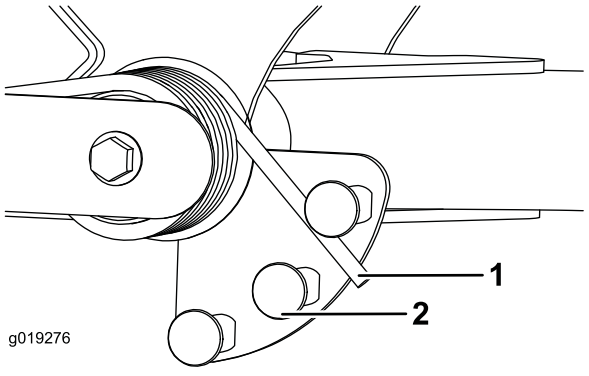

Figure 53

1. Spring
2. Spring actuator

3. Repeat the procedure on the other spring.

Adjusting the Lift-Arm Turnaround Position

1. Position the machine on a level surface, lower the cutting units, stop the engine, engage the parking brakes, and remove the key from the ignition switch.
2. The lift-arm switch is located underneath the hydraulic tank behind the front, right lift arm (Figure 54).
3. Loosen the switch-mounting screws and move the switch down to increase the lift-arm turnaround height or move the switch up to decrease the lift-arm turnaround height (Figure 54).

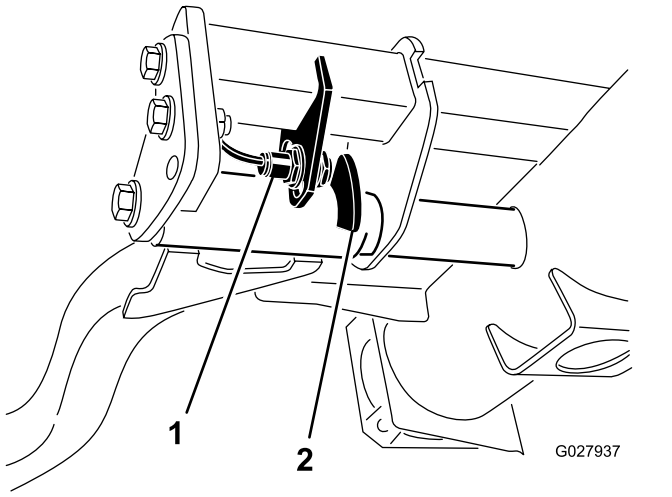

Figure 54

1. Switch
2. Lift-arm sensing device

4. Tighten the mounting screws.

Pushing or Towing the Machine

In an emergency, you can move the machine by actuating the bypass valve in the variable displacement hydraulic pump and pushing or towing the machine.

Important: **Do not push or tow the machine faster than 3 to 4.8 km/h (2 to 3 mph) because internal transmission damage may occur. The bypass valve must be open whenever you push or tow the machine.**

1. Rotate the bypass-valve bolt 1–1/2 turns to open and allow oil to bypass internally (Figure 55).

   Note: The bypass valve is located on the left side of the hydrostat. By bypassing the fluid, you can move the machine slowly without damaging the transmission.

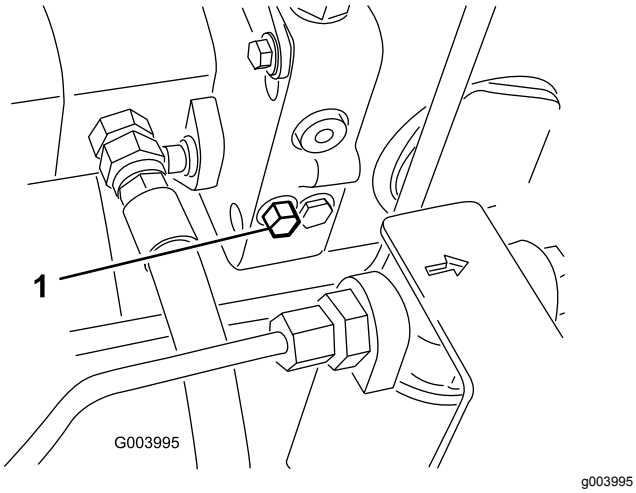

Figure 55

1. Bypass-valve bolt

2. Close the bypass valve before starting the engine. However, do not exceed 7 to 11 N-m (5 to 8 ft-lb) torque to close the valve.

   Important: **Running the engine with the bypass valve open causes the transmission to overheat.**

Jacking Points

Note: Use jack stands to support the machine when required.

- Front—rectangular pad, under the axle tube, inside each front tire (Figure 56).

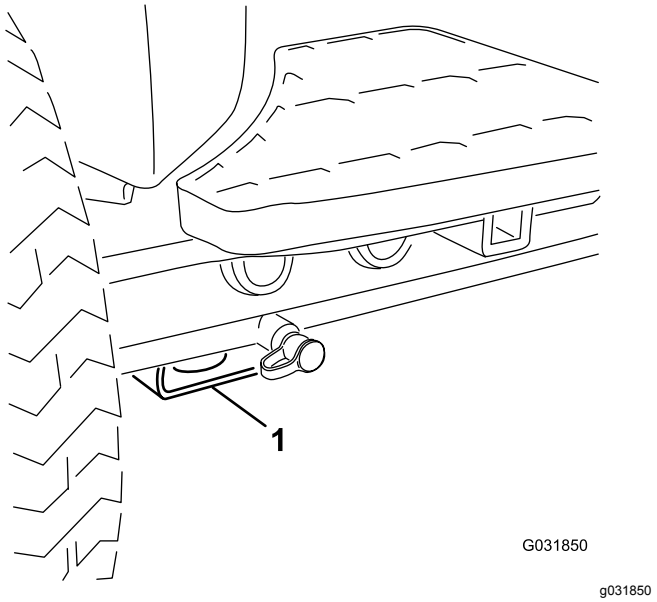

Figure 56

1. Front jacking point

- Rear—rectangular axle tube on the rear axle.

Transporting the Machine

Use a heavy-duty trailer or truck to transport the machine. Ensure that the trailer or truck has all necessary brakes, lighting, and marking as required by law. Please carefully read all the safety instructions. Knowing this information could help you, your family, pets, or bystanders avoid injury.

⚠ WARNING

Driving on the street or roadway without turn signals, lights, reflective markings, or a slow-moving vehicle emblem is dangerous and can lead to accidents causing personal injury.

Do not drive the machine on a public street or roadway.

1. If you are using a trailer, connect it to the towing vehicle and connect the safety chains.
2. If applicable, connect the trailer brakes.
3. Load the machine onto the trailer or truck.
4. Stop the engine, remove the key, set the brake, and close the fuel valve.

5. Use the metal tie-downs on the machine to securely fasten the machine to the trailer or truck with straps, chains, cable, or ropes (Figure 57 and Figure 58).
   - Front—the hole in the rectangular pad, under the axle tube, inside each front tire (Figure 57)

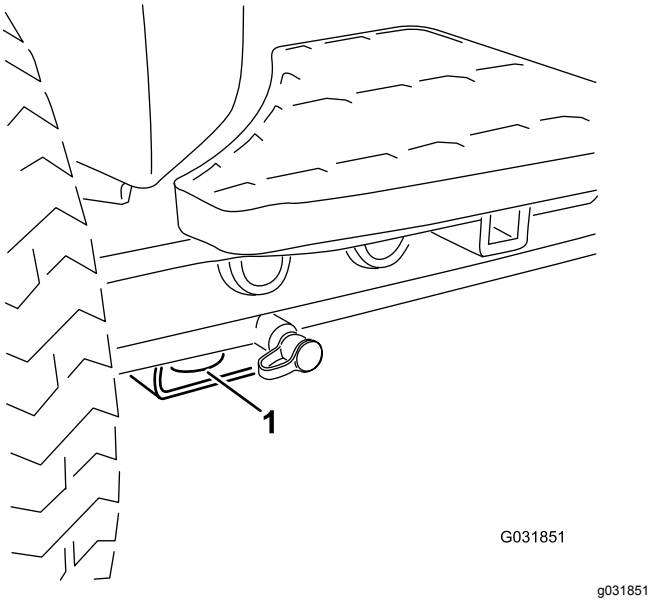

Figure 57

1. Front tie down

   - Rear—each side of the machine on the rear frame (Figure 58)

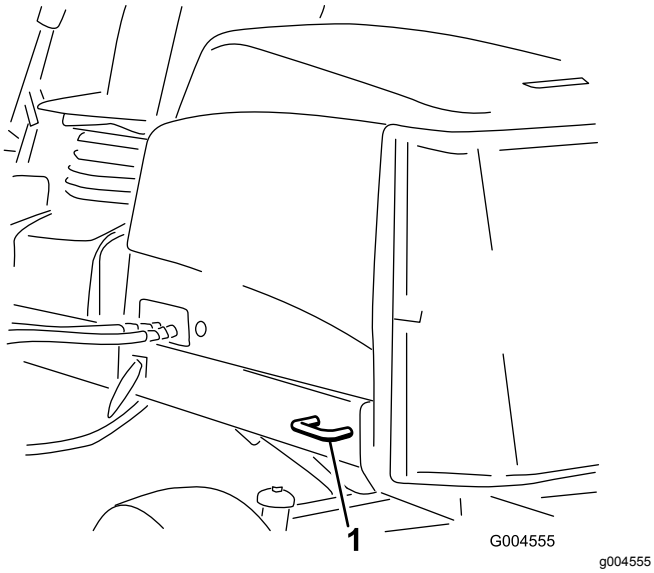

Figure 58

1. Rear tie-down

Loading the Machine

Use extreme caution when loading the machine onto a trailer or a truck. Use a full-width ramp that is wide enough to extend beyond the front tires of the machine instead of individual ramps for each tire (Figure 59). If it is not possible to use a full-width ramp, use enough individual ramps to simulate a full-width continuous ramp.

The ramp should be long enough so that the angles do not exceed 15 (Figure 59). A steeper angle may cause mower components to get caught as the unit moves from the ramp to the trailer or truck. Steeper angles may also cause the machine to tip backward. If loading the machine on or near a slope, position the trailer or truck so that it is on the down side of the slope and the ramp extends up the slope. This will minimize the ramp angle. The trailer or truck should be as level as possible.

Important: **Do not attempt to turn the machine while on the ramp; you may lose control and drive off the side.**

⚠ WARNING

Loading a machine onto a trailer or truck increases the possibility of tipping over and could cause serious injury or death.

- **Use extreme caution when operating a machine on a ramp.**
- **Use the ROPS (in the up position) while using the seat belt when loading the machine. Ensure that the ROPS clears the top of an enclosed trailer.**
- **Use only a single, full-width ramp.**
- **If individual ramps must be used, use enough ramps to create an unbroken ramp surface wider than the machine.**
- **Do not exceed a 15-degree angle between the ramp and the ground or between the ramp and the trailer or truck.**
- **Avoid sudden acceleration or deceleration while driving the machine up or down a ramp.**

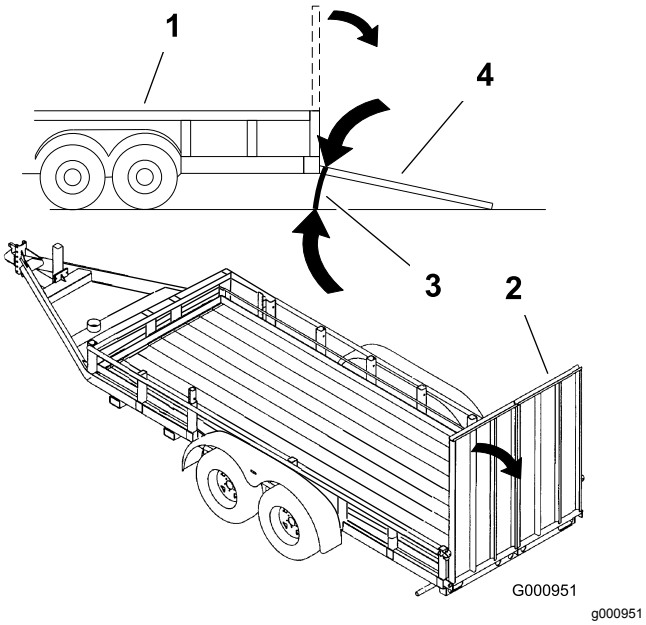

Figure 59

1. Trailer
2. Full-width ramp
3. Not greater than 15 degrees
4. Full-width ramp—side view

Setting the Reel Speed

To achieve a consistent, high quality-of-cut and a uniform after cut appearance, it is important that you set the reel speed to the proper setting. Adjust the reel speed as follows:

1. In the InfoCenter, under the settings menu, enter the blade count, mow speed, and HOC to calculate the proper reel speed.
2. If further adjustments are required, in the settings menu, scroll down to the F Reel RPM, R Reel RPM, or both.
3. Press the right button to change the reel-speed value.

   Note: As you change the speed setting, the display continues to show the calculated reel speed based on blade count, mow speed and HOC, but the new value is also be displayed.

   Note: You may need to increase or decrease the reel speed to compensate for varying turf conditions.

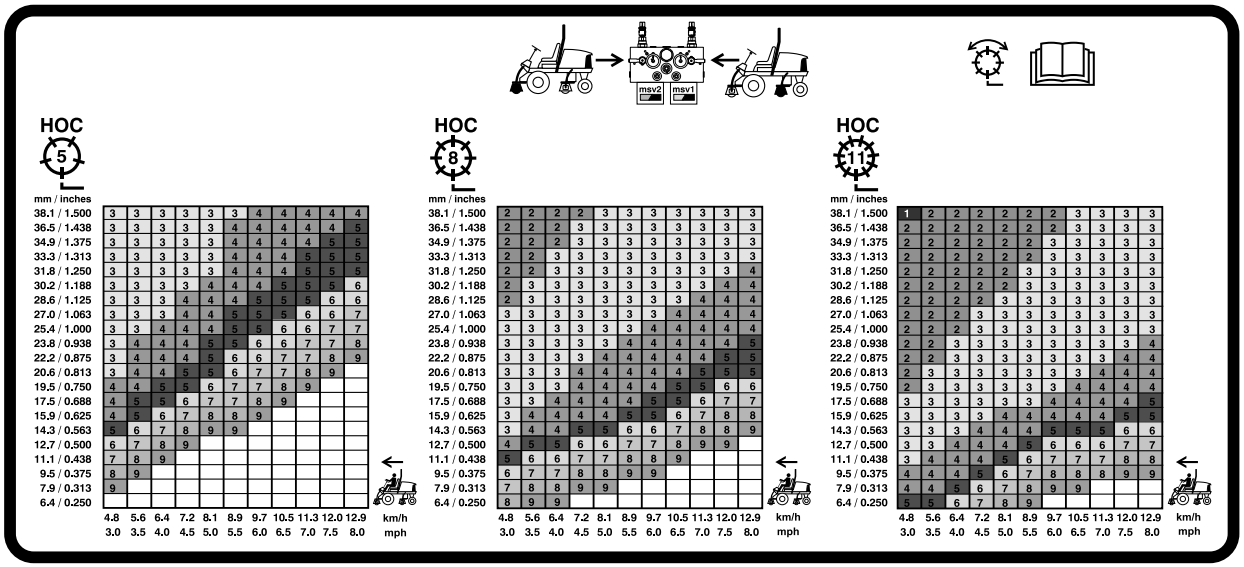

g031995

Figure 60

5 inch (127 mm) Reel Speed Chart

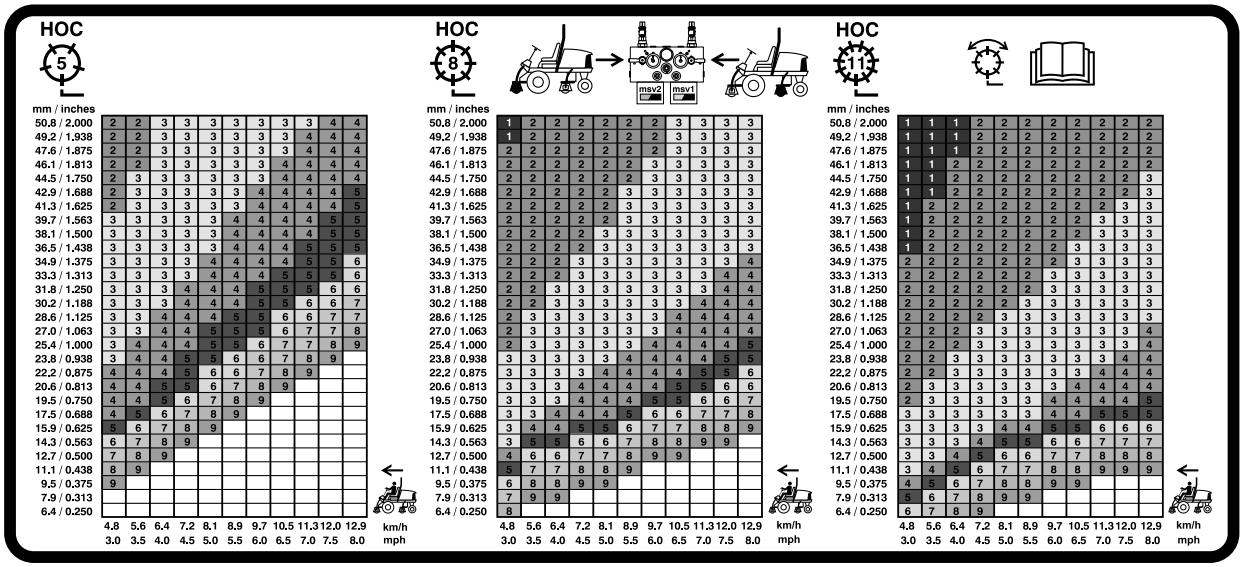

G031996

g031996

Figure 61

7 inch (177.8 mm) Reel Speed Chart

Understanding the Diagnostic Light

The machine is equipped with a diagnostic light, which indicates if the machine detects a malfunction. The diagnostic light is located on the InfoCenter, above the display screen (Figure 62). When the machine is functioning properly and the key switch is moved to the ON/RUN position, the diagnostic light turns on briefly to indicate that the light is working properly. When a machine advisory message appears, the light illuminates when the message is present. When a fault message appears, the light blinks until the fault is resolved.

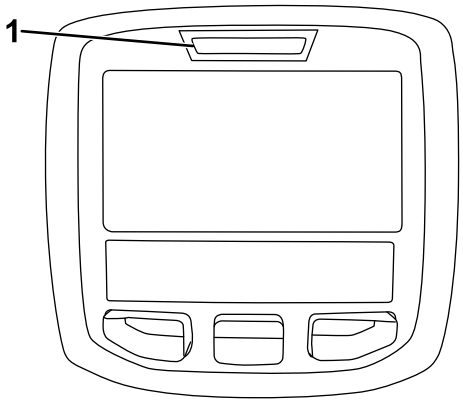

g021272

g021272

Figure 62

1. Diagnostic light

Checking the Interlock Switches

The purpose of the interlock switches is to prevent the engine from cranking or starting unless the traction pedal is in the NEUTRAL position, the Enable/Disable switch is in the DISABLE position, and the Lower Mow/Raise control is in the NEUTRAL position. In addition, the engine should stop when you press the traction pedal while you are off the seat or if the parking brake is engaged.

⚠ CAUTION

If the safety-interlock switches are disconnected or damaged, the machine could operate unexpectedly, causing personal injury.

- **Do not tamper with the interlock switches.**
- **Check the operation of the interlock switches daily and replace any damaged switches before operating the machine.**

Verifying the Interlock-Switch Function

Service Interval: Before each use or daily

1. Park the machine on a level surface, lower the cutting units, stop the engine, and engage the parking brake.
2. Turn the key in the ignition switch to the ON position, but do not start the machine.
3. Locate the appropriate switch function in the diagnostics menu on the InfoCenter.
4. Individually, change each of the switches from open to closed (i.e., sit on seat, engage traction pedal, etc.), and note that the appropriate state of the switch changes.

   Note: Repeat this for all switches that you can change by hand.
5. If a switch is closed and the appropriate indicator does not change, check all wiring and connections to the switch and/or check the switches with an ohm meter.

   Note: Replace any faulty switches and repair any faulty wiring.

Note: The InfoCenter display also has the ability to detect which output solenoids or relays are turned on. This is a quick way to determine if a machine malfunction is electrical or hydraulic.

Verifying the Output Function

1. Park the machine on a level surface, lower the cutting units, stop the engine, and engage the parking brake.
2. Turn the key in the ignition switch to the ON position and start the machine.
3. Locate the appropriate output function in the diagnostics menu on the InfoCenter.
4. Sit on the seat and attempt to operate the desired function of the machine.

Note: The appropriate outputs should change state to indicate that the ECM is turning on that function.

If the correct outputs do not illuminate, verify that the required input switches are in the necessary positions to allow that function to occur. Verify the correct switch function.

If the output displays are on as specified, but the machine does not function properly, this indicates a non-electrical problem. Repair the machine as necessary.

Hydraulic-Valve Solenoid Functions

Use the list below to identify and describe the different functions of the solenoids in the hydraulic manifold. Each solenoid must be energized to allow the function to occur.

Solenoid	Function
SP2	Front reel circuit
SP1	Rear reel circuit
SVRV	Lift/lower cutting units
SV1	Lift/lower front cutting units
SV3	Lift/lower rear cutting units
SV2	Raise any cutting units

Operating Tips

Familiarization

Before mowing grass, practice operating the machine in an open area. Start and stop the engine. Operate in forward and reverse. Lower and raise the cutting units and engage and disengage the reels. When you feel familiar with the machine, practice operating up and down slopes at different speeds.

Warning System

If a warning light comes on during operation, stop the machine immediately and correct the problem before continuing operation. Serious damage could occur if you operate the machine with a malfunction.

Mowing

Start the engine and move the engine-speed switch to the FAST position. Move the Enable/Disable switch to the ENABLE position and use the Lower Mow/Raise lever to control the cutting units (the front cutting units are timed to lower before the rear cutting units). To move forward and cut grass, press the traction pedal forward.

Transport

Move the Enable/Disable switch to the DISABLE position and raise the cutting units to the TRANSPORT position. Move the Mow/Transport lever to the TRANSPORT position. Be careful when driving between objects so you do not accidentally damage the machine or cutting units. Use extra care when operating the machine on slopes. Drive slowly and avoid sharp turns on slopes to prevent rollovers.

Lower the cutting units when going downhill for steering control.

Maintenance

Note: Determine the left and right sides of the machine from the normal operating position.

Recommended Maintenance Schedule(s)

Maintenance Service Interval	Maintenance Procedure
After the first hour	• Torque the wheel lug nuts to 94 to 122 N-m (70 to 90 ft-lb).
After the first 10 hours	• Torque the wheel lug nuts to 94 to 122 N-m (70 to 90 ft-lb). • Check the alternator-belt tension.
Before each use or daily	• Check the cooling system. • Check the hydraulic-fluid level. • Check the reel-to-bedknife contact. • Check the operation of the interlock switches. • Check the engine-oil level. • Drain water or other contaminants from water separator. • Remove debris from the screen and radiator/oil cooler. (More frequently in dirty operating conditions). • Check the hydraulic lines and hoses.
Every 50 hours	• Grease the bearings and bushings (and immediately after every washing). • Clean the battery and check the condition of it. (Or weekly, whichever comes first). • Check the battery-cable connections.
Every 100 hours	• Inspect the cooling-system hoses. • Check the alternator-belt tension.
Every 200 hours	• Check the reel-bearing preload.
Every 250 hours	• Torque the wheel lug nuts to 94 to 122 N-m (70 to 90 ft-lb). • Change the engine oil and filter.
Every 400 hours	• Service the air cleaner. (Service the air cleaner earlier if the air cleaner indicator shows red. Service it more frequently in extremely dirty or dusty conditions.) • Replace the fuel-filter canister. • Replace the engine-fuel filter. • Check the fuel lines and connections for deterioration, damage, or loose connections. (Or yearly, whichever comes first).
Every 800 hours	• Check the rear wheel toe-in. • Change the hydraulic fluid. • Change the hydraulic filters. (Or more often if the service-interval indicator is in the red zone). • Pack the rear wheel bearings.
Every 6,000 hours	• Disassemble, clean, and assemble the soot filter of the DPF. or clean the soot filter if engine faults SPN 3720 FMI 16, SPN 3720 FMI 0, or SPN 3720 FMI 16 display in the InfoCenter.
Every 2 years	• Flush and replace the cooling-system fluid. • Drain and flush the hydraulic tank. • Replace all moving hoses.

Daily Maintenance Checklist

Duplicate this page for routine use.

Maintenance Check Item	For the week of: Mon.	Tues.	Wed.	Thurs.	Fri.	Sat.	Sun.
Check the safety-interlock operation.							
Check the brake operation.							
Check the engine oil and fuel level.							
Drain the water/fuel separator.							
Check the air-filter-restriction indicator.							
Check the radiator and screen for debris.							
Check unusual engine noises.[1]							
Check unusual operating noises.							
Check the hydraulic-system-oil level.							
Check the hydraulic-filter indicator. [2]							
Check hydraulic hoses for damage.							
Check for fluid leaks.							
Check the tire pressure.							
Check the instrument operation.							
Check the reel-to-bedknife adjustment.							
Check the height-of-cut adjustment.							
Check all grease fittings for lubrication. [3]							
Touch-up damaged paint.							

1. Check the glow plug and injector nozzles if hard starting, excess smoking, or rough running is noted.
2. Check with the engine running and the oil at operating temperature.
3. Immediately after every washing, regardless of the interval listed

Notation for Areas of Concern

Inspection performed by:		
Item	**Date**	**Information**
1		
2		
3		
4		
5		
6		
7		
8		

Important: **Refer to your engine operator's manual for additional maintenance procedures.**

Note: Download a free copy of the electrical or hydraulic schematic by visiting www.Toro.com and searching for your machine from the Manuals link on the home page.

Service Interval Chart

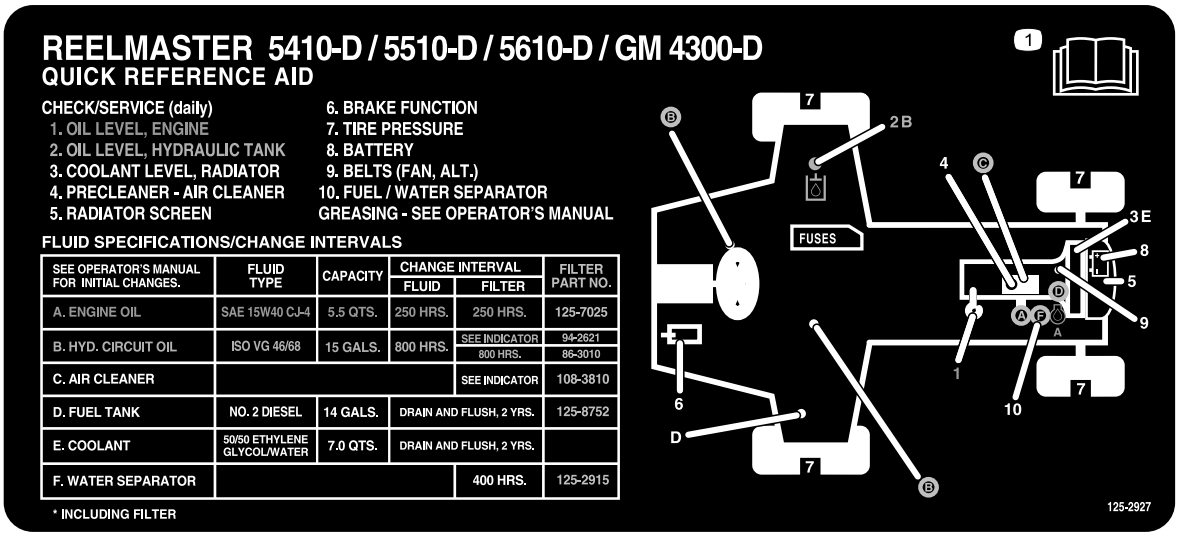

SEE OPERATOR'S MANUAL FOR INITIAL CHANGES.	FLUID TYPE	CAPACITY	CHANGE INTERVAL		FILTER PART NO.
			FLUID	FILTER	
A. ENGINE OIL	SAE 15W40 CJ-4	5.5 QTS.	250 HRS.	250 HRS.	125-7025
B. HYD. CIRCUIT OIL	ISO VG 46/68	15 GALS.	800 HRS.	SEE INDICATOR 800 HRS.	94-2621 86-3010
C. AIR CLEANER				SEE INDICATOR	108-3810
D. FUEL TANK	NO. 2 DIESEL	14 GALS.	DRAIN AND FLUSH, 2 YRS.		125-8752
E. COOLANT	50/50 ETHYLENE GLYCOL/WATER	7.0 QTS.	DRAIN AND FLUSH, 2 YRS.		
F. WATER SEPARATOR				400 HRS.	125-2915

* INCLUDING FILTER

decal125-2927

Figure 63

⚠ CAUTION

If you leave the key in the ignition switch, someone could accidently start the engine and seriously injure you or other bystanders.

Remove the key from the ignition switch before you perform any maintenance.

Lubrication

Greasing the Bearings and Bushings

Service Interval: Every 50 hours (and immediately after every washing).

Lubricate all grease fittings for the bearings and bushings with No. 2 lithium grease.

The grease fitting locations and quantities are as follows:

- Pump driveshaft (3) (Figure 64)

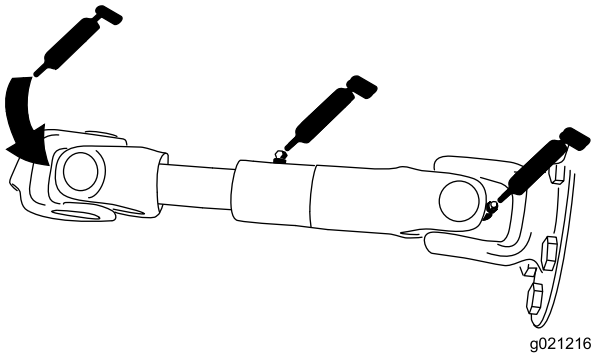

g021216

Figure 64

- Cutting-unit lift-arm cylinders (2 each) (Figure 65)

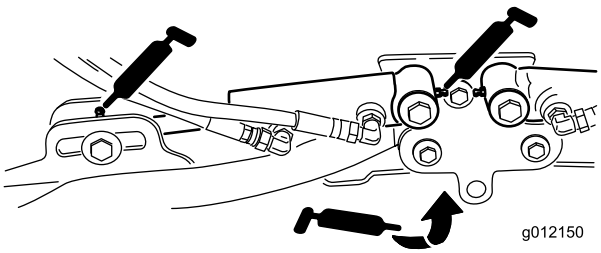

g012150

Figure 65

- Lift-arm pivots (1 each) (Figure 65)

- Cutting-unit carrier-frame and pivot (2 each) (Figure 66)

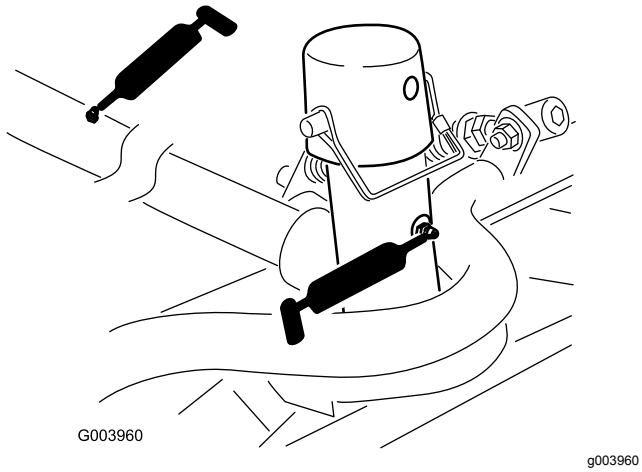

Figure 66

- Lift-arm-pivot shaft (1 each) (Figure 67)

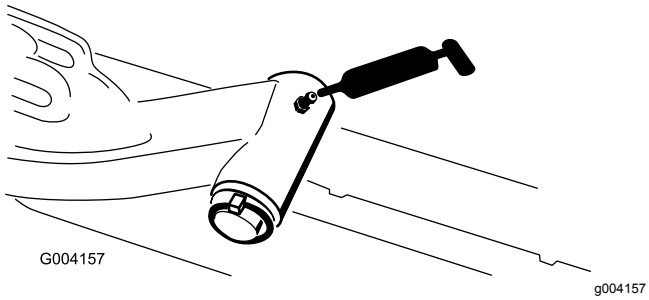

Figure 67

- Rear axle tie rod (2) (Figure 68)

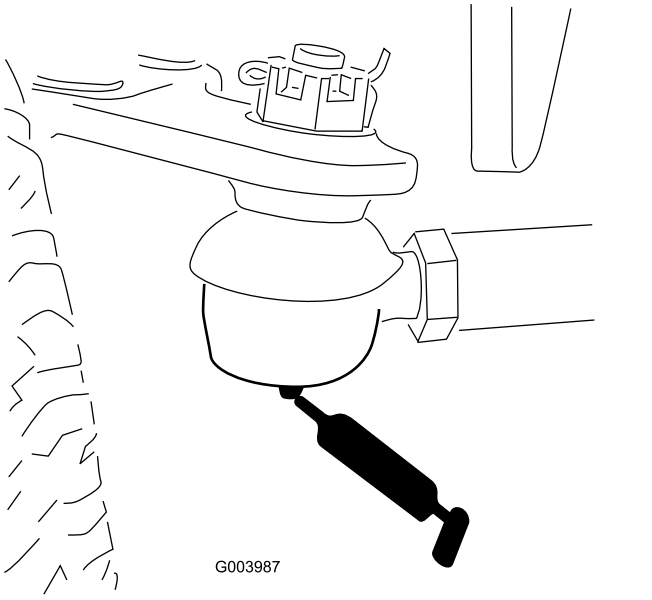

Figure 68

- Axle-steering pivot (1) (Figure 69)

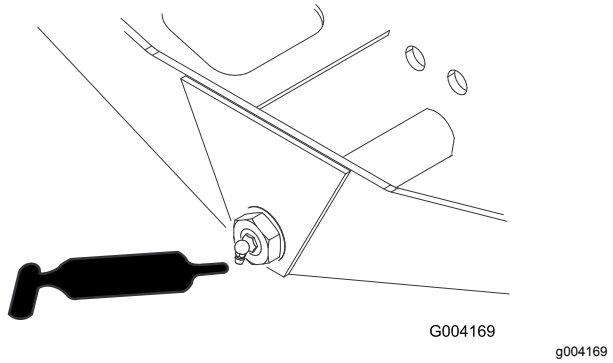

Figure 69

- Steering-cylinder ball joints (2) (Figure 70)

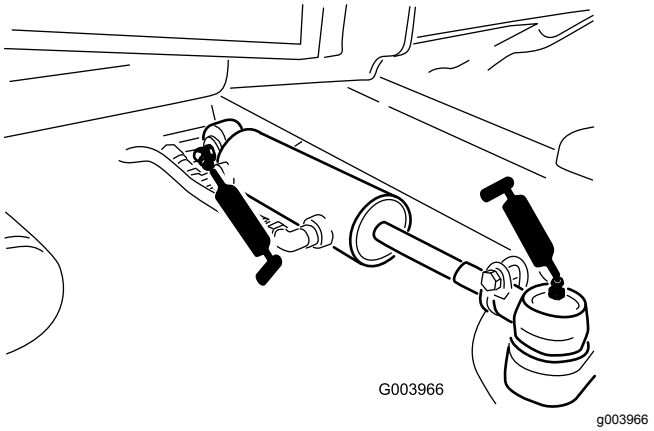

Figure 70

- Brake pedal (1) (Figure 71)

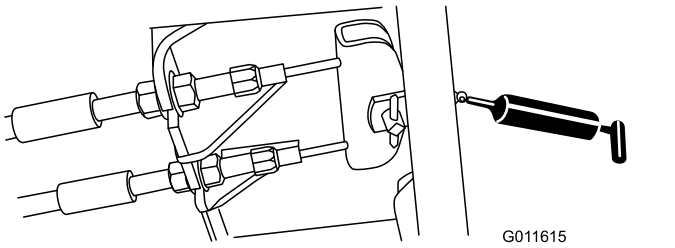

Figure 71

Engine Maintenance

Servicing the Air Cleaner

Service Interval: Every 400 hours (Service the air cleaner earlier if the air cleaner indicator shows red. Service it more frequently in extremely dirty or dusty conditions.)

Check the air-cleaner body for damage which could cause an air leak. Replace if damaged. Check the whole intake system for leaks, damage, or loose hose clamps.

Service the air-cleaner filter only when the service indicator requires it (Figure 72). Changing the air filter before it is necessary only increases the chance of dirt entering the engine when you remove the filter.

Important: **Make sure that the cover is seated correctly and seals with the air-cleaner body.**

1. Release the latches securing the air-cleaner cover to the air-cleaner body (Figure 72).

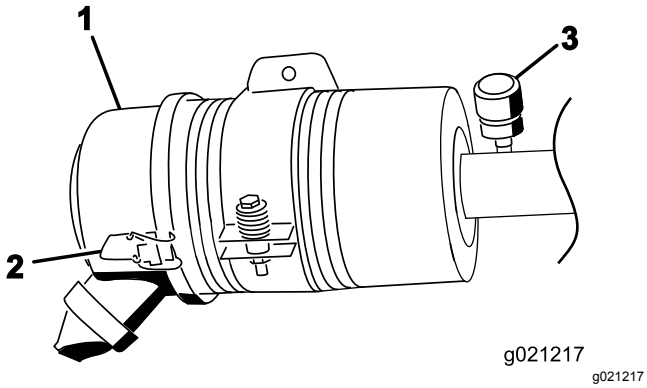

Figure 72

1. Air-cleaner cover
2. Air-cleaner-cover latch
3. Air-cleaner service indicator

2. Remove the cover from the air-cleaner body.
3. Before removing the filter, use low-pressure air (40 psi, clean and dry) to help remove large accumulations of debris packed between outside of the filter and the canister.

   Important: **Avoid using high-pressure air, which could force dirt through the filter into the intake tract.**

   Note: This cleaning process prevents debris from migrating into the intake when you remove the filter.
4. Remove and replace the filter (Figure 73).

   Note: Do not clean the used element due to the possibility of damaging the filter media.

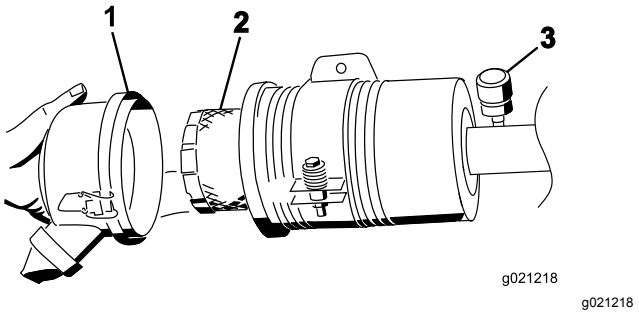

Figure 73

1. Air-cleaner cover
2. Air-cleaner filter
3. Air-cleaner indicator

5. Inspect the new filter for shipping damage, checking the sealing end of the filter and the body.

   Important: **Do not use a damaged element.**
6. Insert the new filter by applying pressure to the outer rim of the element to seat it in the canister.

   Important: **Do not apply pressure to the flexible center of the filter.**
7. Clean the dirt-ejection port located in the removable cover. Remove the rubber outlet valve from the cover, clean the cavity, and replace the outlet valve.
8. Install the cover orienting the rubber outlet valve in a downward position—between approximately 5 o'clock to 7 o'clock when viewed from the end.
9. Secure the latches.

Servicing the Engine Oil

Oil Specification

Use high-quality, low-ash engine oil that meets or exceeds the following specifications:

- API service category CJ-4 or higher
- ACEA service category E6
- JASO service category DH-2

Important: **Using engine oil other than API CJ-4 or higher, ACEA E6, or JASO DH-2 may cause the diesel particulate filter to plug or cause engine damage.**

Use the following engine oil viscosity grade:

- Preferred oil: SAE 15W-40 (above 0°F)
- Alternate oil: SAE 10W-30 or 5W-30 (all temperatures)

Toro Premium Engine Oil is available from your Authorized Toro Distributor in either 15W-40 or 10W-30 viscosity grades. See the parts catalog for part numbers.

Checking the Engine-Oil Level

Service Interval: Before each use or daily

Important: **Check the engine oil daily. If the engine-oil level is above the Full mark on the dipstick, the engine oil may be diluted with fuel; If the engine oil level is above the Full mark, change the engine oil.**

The best time to check the engine oil is when the engine is cool before it has been started for the day. If it has already been run, allow the oil to drain back down to the sump for at least 10 minutes before checking. If the oil level is at or below the Add mark on the dipstick, add oil to bring the oil level to the Full mark. **Do not overfill the engine with oil**.

Important: **Keep the engine oil level between the upper and lower limits on the oil gauge; the engine may fail if you run it with too much or too little oil.**

1. Park the machine on a level surface. Unlock the engine-cover latches.
2. Open the engine cover.
3. Remove the dipstick, wipe it clean, install the dipstick into the tube, and pull it out again. The oil level should be between the FULL and ADD marks (Figure 74).

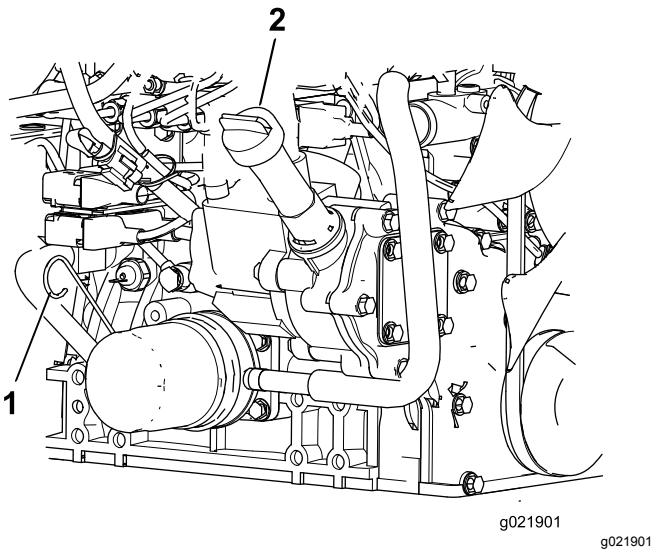

Figure 74

1. Dipstick
2. Oil-fill cap

4. If the oil level is low, remove the fill cap and add oil until it is between the FULL and ADD marks (Figure 74).

   Note: Do not overfill.
5. Install the oil-fill cap and dipstick.
6. Close the engine cover and secure it with the latches.

Crankcase Oil Capacity

5.2 L (5.5 US qt) with the filter

Changing the Engine Oil and Filter

Service Interval: Every 250 hours—Change the engine oil and filter.

1. Remove the drain plug and let the oil flow into a drain pan (Figure 75).

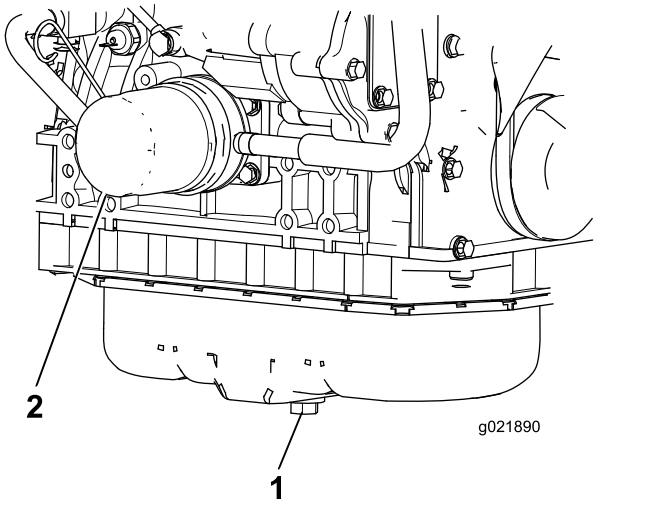

g021890

Figure 75

1. Engine-oil drain plug
2. Oil filter

2. When all the oil is drained, install the drain plug.
3. Remove the oil filter (Figure 75).
4. Apply a light coat of clean oil to the new filter seal before screwing it on.

   Important: **Do not overtighten.**
5. Add oil to the crankcase; refer to Checking the Engine-Oil Level (page 52).

Servicing the Diesel-Oxidation Catalyst (DOC) and the Soot Filter

Service Interval: Every 6,000 hours or clean the soot filter if engine faults SPN 3720 FMI 16, SPN 3720 FMI 0, or SPN 3720 FMI 16 display in the InfoCenter.

- If advisory message ADVISORY 179 displays in the InfoCenter, the DPF is nearing the recommended point for servicing the diesel-oxidation catalyst and the soot filter.

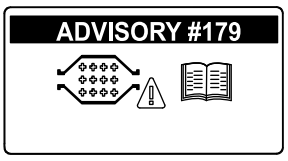

g213865

Figure 76

- If engine faults CHECK ENGINE SPN 3251 FMI 0, CHECK ENGINE SPN 3720 FMI 0, or CHECK ENGINE SPN 3720 FMI 16in the InfoCenter (Figure 77) display in the InfoCenter, clean the soot filter using the steps that follow:

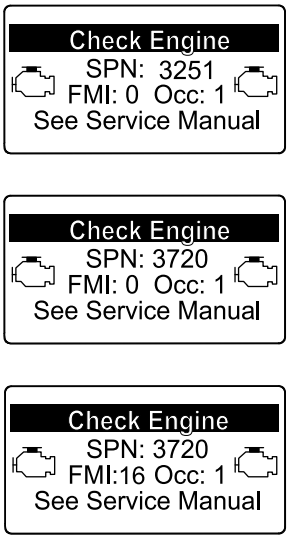

Figure 77

1. Refer to the Engine section in the *Service Manual* for information on disassembling and assembling the diesel-oxidation catalyst and the soot filter of the DPF.
2. Refer to your Authorized Toro Distributor for diesel-oxidation catalyst and the soot filter replacement parts or service.
3. Contact your Authorized Toro Distributor to have them reset the engine ECU after you install a clean DPF.

Fuel System Maintenance

⚠ DANGER

Under certain conditions, diesel fuel and fuel vapors are highly flammable and explosive. A fire or explosion from fuel can burn you and others and can damage property.

- **Use a funnel and fill the fuel tank outdoors, in an open area, when the engine is off and is cold. Wipe up any fuel that spills.**
- **Do not fill the fuel tank completely full. Add fuel to the fuel tank until the level is 6 to 13 mm (1/4 to 1/2 inch) below the bottom of the filler neck. This empty space in the tank allows the fuel to expand.**
- **Never smoke when handling fuel, and stay away from an open flame or where fuel fumes may be ignited by a spark.**
- **Store fuel in a clean, safety-approved container and keep the cap in place.**

Servicing the Water Separator

Service Interval: Before each use or daily—Drain water or other contaminants from water separator.

Every 400 hours—Replace the fuel-filter canister.

1. Place a clean container under the fuel filter.
2. Loosen the drain plug on the bottom of the filter canister and open the vent on the top of the canister mount.

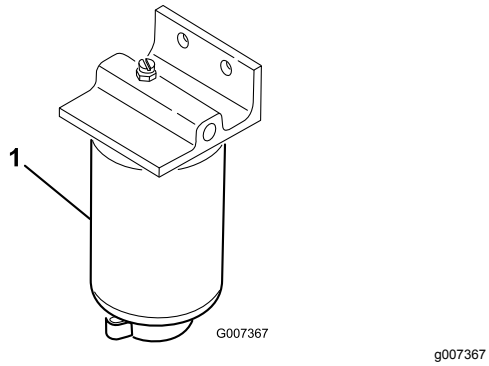

Figure 78

1. Water separator filter canister

3. Clean the area where the filter canister mounts.
4. Remove the filter canister and clean the mounting surface.
5. Lubricate the gasket on the filter canister with clean oil.
6. Install the filter canister by hand until the gasket contacts mounting surface, then rotate it an additional 1/2 turn.
7. Tighten the drain plug on the bottom of the filter canister and close the vent on the top of the canister mount.

Servicing the Engine-Fuel Filter

Service Interval: Every 400 hours—Replace the engine-fuel filter.

1. Clean the area around the fuel-filter head (Figure 79).

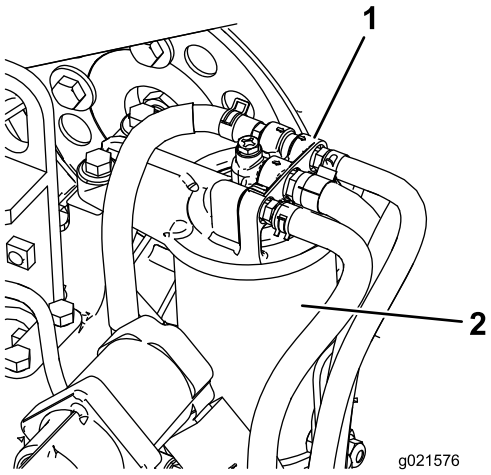

Figure 79

1. Fuel-filter head
2. Fuel filter

2. Remove the filter and clean the filter-head mounting surface (Figure 79).
3. Lubricate the filter gasket with clean lubricating engine oil. Refer to the *Engine Operator's Manual*, included with the machine, for additional information.
4. Install the dry filter canister, by hand, until the gasket contacts the filter head, then rotate it an additional 1/2 turn.
5. Start the engine and check for fuel leaks around the filter head.

Checking the Fuel Lines and Connections

Service Interval: Every 400 hours (Or yearly, whichever comes first).

Check the fuel lines and connections for deterioration, damage, or loose connections.

Fuel Pick-up Tube Screen

The fuel pick-up tube, located inside the fuel tank, is equipped with a screen to help prevent debris from entering the fuel system. Remove the fuel pick-up tube and clean screen as required.

Electrical System Maintenance

Important: **Before welding on the machine, disconnect both cables from the battery, both wire harness plugs from the electronic control module, and the terminal connector from the alternator to prevent damage to the electrical system.**

Servicing the Battery

Service Interval: Every 50 hours—Clean the battery and check the condition of it. (Or weekly, whichever comes first).

Every 50 hours—Check the battery-cable connections.

WARNING

CALIFORNIA
Proposition 65 Warning

Battery posts, terminals, and related accessories contain lead and lead compounds, chemicals known to the State of California to cause cancer and reproductive harm. Wash hands after handling.

⚠ DANGER

Battery electrolyte contains sulfuric acid which is a deadly poison and causes severe burns.

- **Do not drink electrolyte and avoid contact with skin, eyes, or clothing. Wear safety glasses to shield your eyes and rubber gloves to protect your hands.**
- **Fill the battery where clean water is always available for flushing the skin.**

⚠ WARNING

Charging the battery produces gasses that can explode.

Never smoke near the battery and keep sparks and flames away from it.

Keep the terminals and the entire battery case clean because a dirty battery discharges slowly. To clean the battery, wash the entire case with a solution of baking soda and water. Rinse it with clear water.

Fuses

There are 8 fuses in the Electrical System. The fuse block is located behind the control-arm-access panel (Figure 80).

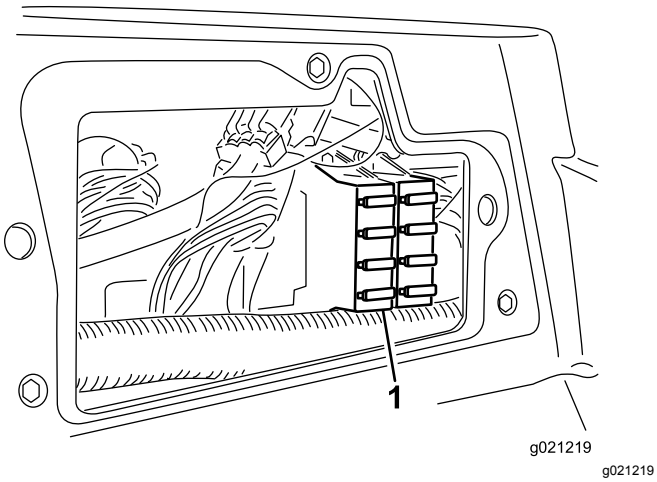

Figure 80

1. Fuse block

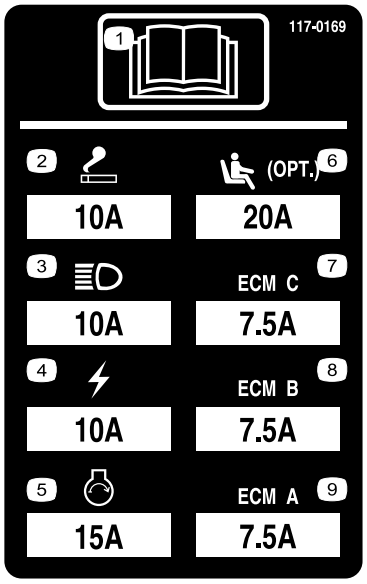

Figure 81

Drive System Maintenance

Adjusting the Traction Drive for Neutral

The machine must not creep when you release the traction pedal. If it does creep, adjust it as follows:

1. Park the machine on a level surface, stop the engine, and lower the cutting units to the ground.
2. Jack up the front of the machine until the front tires are off the ground. Support the machine with jack stands to prevent it from falling accidentally.

   Note: On 4-wheel-drive models, the rear tires must also be off the ground.
3. On the right side of the hydrostat, loosen the locknut on the traction-adjustment cam (Figure 82).

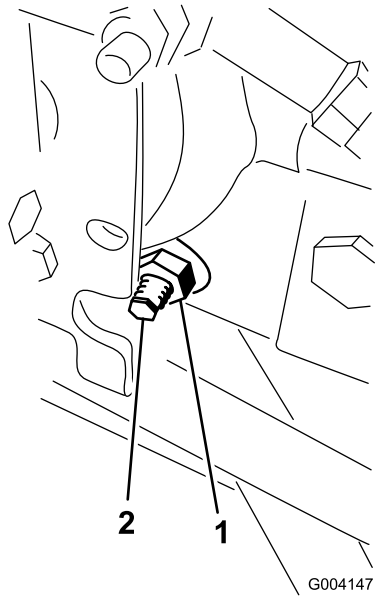

Figure 82

1. Locknut
2. Traction-adjustment cam

⚠ WARNING

The engine must be running while you perform the final adjustment on the traction adjustment cam. This could cause personal injury.

Keep your hands, feet, face, and other body parts away from the muffler, other hot parts of the engine, and any rotating parts.

4. Start the engine and rotate the cam hex in either direction until the wheels stop rotating.
5. Tighten the locknut to secure the adjustment.
6. Stop the engine, remove the jack stands, and lower the machine to the ground.
7. Test drive the machine to make that sure it does not creep.

Adjusting the Rear Wheel Toe-in

Service Interval: Every 800 hours—Check the rear wheel toe-in.

1. Rotate the steering wheel to position the rear wheels straight ahead.
2. Loosen the jam nut on each end of the tie rod (Figure 83).

   Note: The end of the tie rod with the external groove is a left-hand thread.

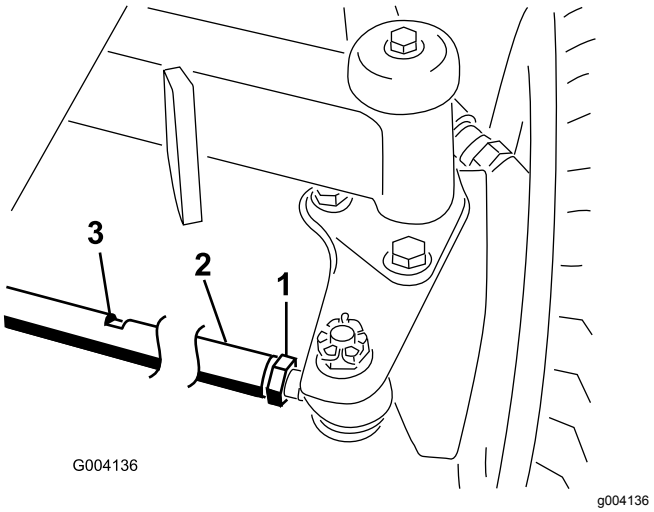

Figure 83

1. Jam nut
2. Tie rod
3. Wrench slot

3. Using the wrench slot, rotate the tie rod
4. Measure the distance at the front and rear of the rear wheels at axle height.

   Note: The distance at the front of the rear wheels should be less than 6 mm (1/4 inch) of the distance measured at the rear of the wheels.
5. Repeat this procedure as required.

Cooling System Maintenance

Removing Debris from the Cooling System

Service Interval: Before each use or daily (More frequently in dirty operating conditions).

Every 100 hours—Inspect the cooling-system hoses.

Every 2 years—Flush and replace the cooling-system fluid.

1. Shut off the engine and remove the key from the ignition switch.
2. Thoroughly clean all debris out of the engine area.
3. Unlatch the clamp and pivot open the rear screen (Figure 84).

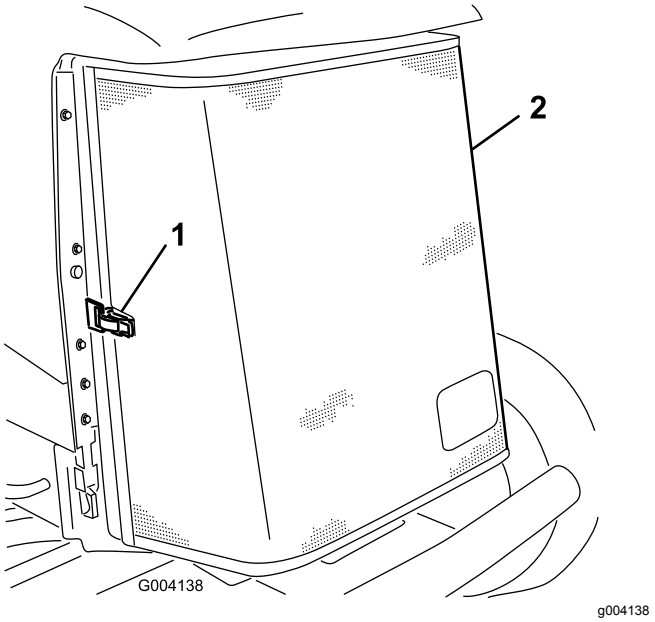

Figure 84

1. Rear-screen latch
2. Rear screen

4. Thoroughly clean both sides of the radiator/oil cooler with compressed air (Figure 85).

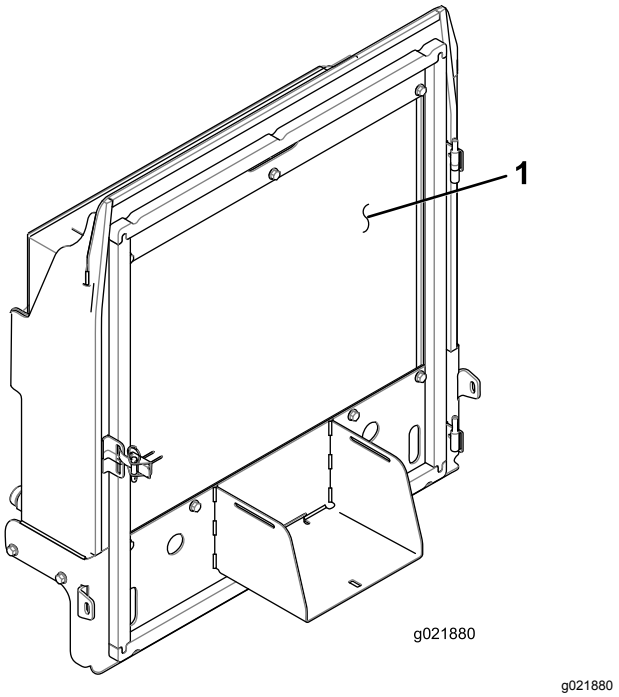

Figure 85

1. Radiator/oil cooler

5. Close the screen and secure the latch.

Brake Maintenance

Adjusting the Parking Brakes

Adjust the brakes when there is more than 2.5 cm (1 inch) of free travel of the brake pedal, or when more holding force is required (Figure 86). Free travel is the distance that the brake pedal moves before you feel braking resistance.

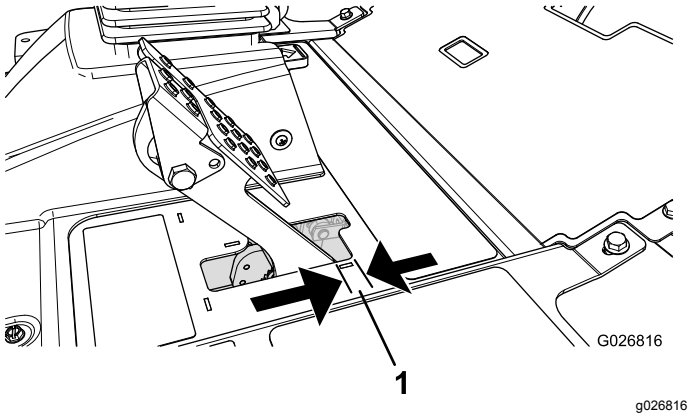

Figure 86

1. Free travel

Note: Use the wheel-motor backlash to rock the drums back and forth to ensure that the drums are free prior to and after adjustment.

1. To reduce free travel of the brake pedals, tighten the brakes by loosening the front nut on the threaded end of the brake cable (Figure 87).

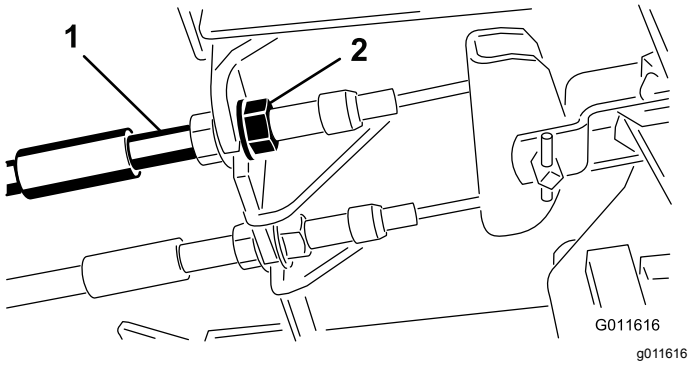

Figure 87

1. Brake cables
2. Front nuts

2. Tighten the rear nut to move the cable backward until brake pedals have 0.63 to 1.27 cm (1/4 to 1/2 inch) of free travel, before the wheel locks up (Figure 86).
3. Tighten the front nuts, ensuring that both cables actuate the brakes simultaneously.

Note: Ensure that the cable conduit does not rotate while you are tightening the nuts.

Adjusting the Parking-Brake Latch

If the parking brake fails to engage and latch, adjust the brake pawl.

1. Loosen the 2 screws securing the parking-brake pawl to the frame (Figure 88).

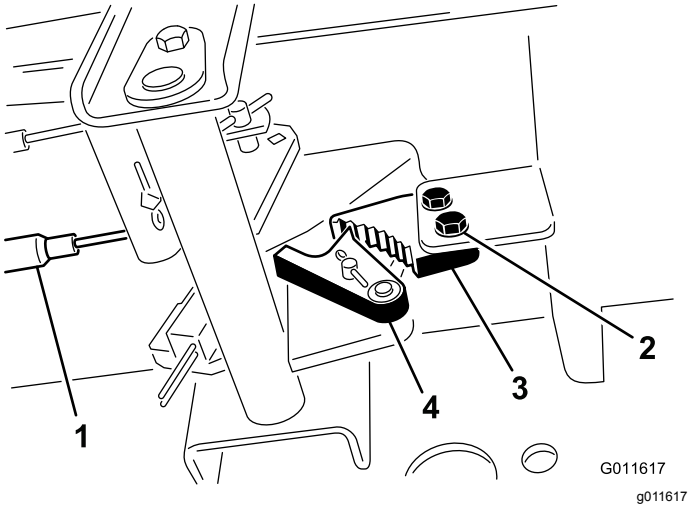

Figure 88

1. Brake cables
2. Screw
3. Parking-brake pawl
4. Brake detent

2. Press the parking-brake pedal forward until the brake detent completely engages on the brake pawl (Figure 88).
3. Tighten the 2 screws to lock the adjustment.
4. Press the brake pedal to release the parking brake.
5. Check the adjustment and adjust as required.

Belt Maintenance

Servicing the Alternator Belt

Service Interval: After the first 10 hours

Every 100 hours

Note: For proper belt tension, allow 10 mm (3/8 inch) deflection when a force of 44 N (10 lb) is applied on the belt midway between the pulleys.

1. If the deflection is not 10 mm (3/8 inch), loosen the alternator mounting bolts (Figure 89).

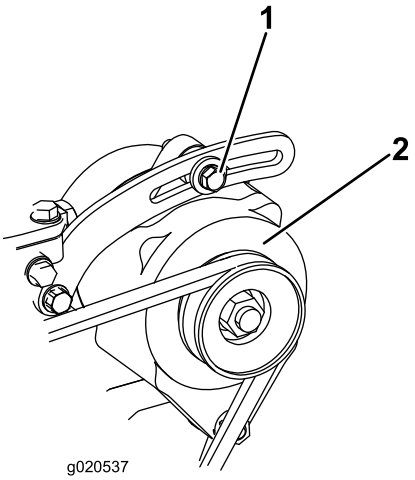

g020537

Figure 89

1. Mounting bolt
2. Alternator

2. Increase or decrease the alternator-belt tension and tighten the bolts.
3. Check the deflection of the belt again to ensure that the tension is correct.

Hydraulic System Maintenance

Changing the Hydraulic Fluid

Service Interval: Every 800 hours

Every 2 years—Drain and flush the hydraulic tank.

If fluid becomes contaminated, contact your Toro Distributor because the system must be flushed. Contaminated fluid looks milky or black when compared to clean oil.

1. Stop the engine and raise the hood.
2. Place a large drain pan under the fitting secured to the bottom of the hydraulic-fluid reservoir (Figure 90).

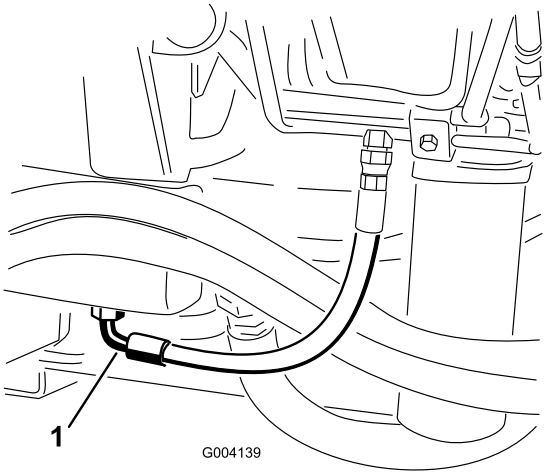

g004139

Figure 90

1. Hose

3. Disconnect the hose from the bottom of the fitting and let the hydraulic fluid flow into the drain pan.
4. Install the hose when hydraulic fluid stops draining.
5. Fill the reservoir with approximately 30 L (8 US gallons) of hydraulic fluid; refer to Checking the Hydraulic Fluid (page 29).

   Important: **Use only hydraulic fluids specified. Other fluids could damage the system.**
6. Install the reservoir cap.
7. Start the engine and use all of the hydraulic controls to distribute hydraulic fluid throughout the system. Also, check for leaks.
8. Stop the engine.

9. Check the level of the hydraulic fluid and add enough to raise level to the FULL mark on the dipstick.

   Important: **Do not overfill.**

Replacing the Hydraulic Filters

Service Interval: Every 800 hours (Or more often if the service-interval indicator is in the red zone).

The hydraulic system is equipped with a service-interval indicator (Figure 91). With the engine running at operating temperature, view the indicator, it should be in the green zone. When the indicator is in the red zone, change the hydraulic filters.

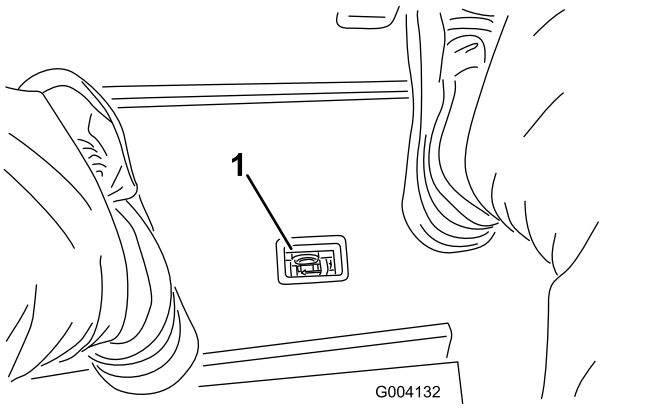

Figure 91

1. Hydraulic-filter-restriction indicator

Important: **Use of any other filters may void the warranty on some components.**

1. Position the machine on a level surface, lower the cutting units, stop the engine, engage the parking brake, and remove the key from the ignition switch.
2. Clean the area around the filter-mounting area and place a drain pan under the filter (Figure 92) and (Figure 93).

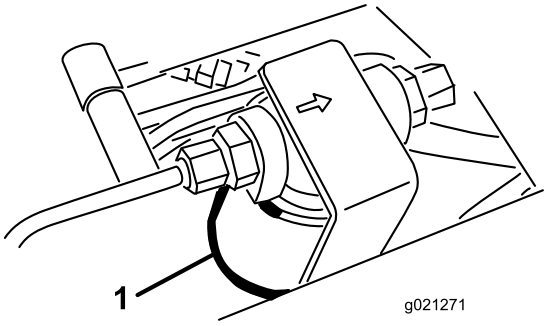

g021271

Figure 92

1. Hydraulic filter

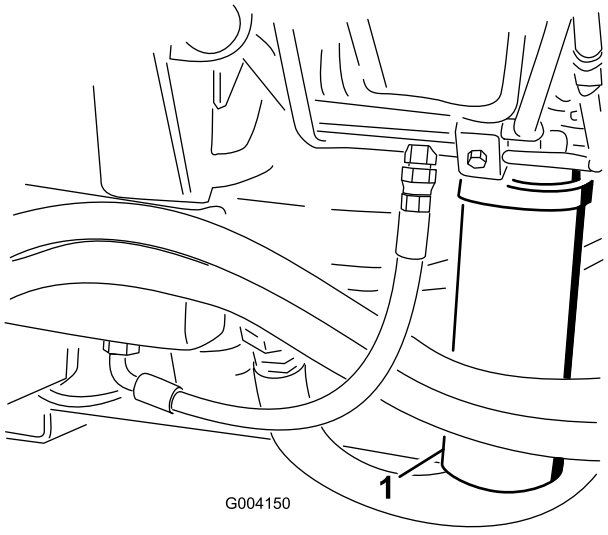

g004150

Figure 93

1. Hydraulic filter

3. Remove the filter.
4. Lubricate the gasket on the new filter with hydraulic oil.
5. Ensure that the filter-mounting area is clean.
6. Install the filter by hand until the gasket contacts the mounting surface, then rotate it an additional 1/2 turn.
7. Repeat the procedure on the other filter.
8. Start the engine and let it run for about 2 minutes to purge air from the system.
9. Stop the engine and check for leaks.

Checking the Hydraulic Lines and Hoses

Service Interval: Before each use or daily

Check the hydraulic lines and hoses for leaks, kinked lines, loose mounting supports, wear, loose fittings, weather deterioration, and chemical deterioration. Make all necessary repairs before operating.

⚠ WARNING

Hydraulic fluid escaping under pressure can penetrate skin and cause injury.

- **Make sure that all hydraulic fluid hoses and lines are in good condition and that all hydraulic connections and fittings are tight before applying pressure to the hydraulic system.**
- **Keep your body and hands away from pin hole leaks or nozzles that eject high-pressure hydraulic fluid.**
- **Use cardboard or paper to find hydraulic leaks.**
- **Safely relieve all pressure in the hydraulic system before performing any work on the hydraulic system.**
- **Get immediate medical help if fluid is injected into the skin.**

Hydraulic-System Test Ports

Use the hydraulic-system test ports to test the pressure in the hydraulic circuits. Contact your Toro Distributor for assistance.

Use the test ports on the front hydraulic tubes to assist in troubleshooting the traction circuit (Figure 94).

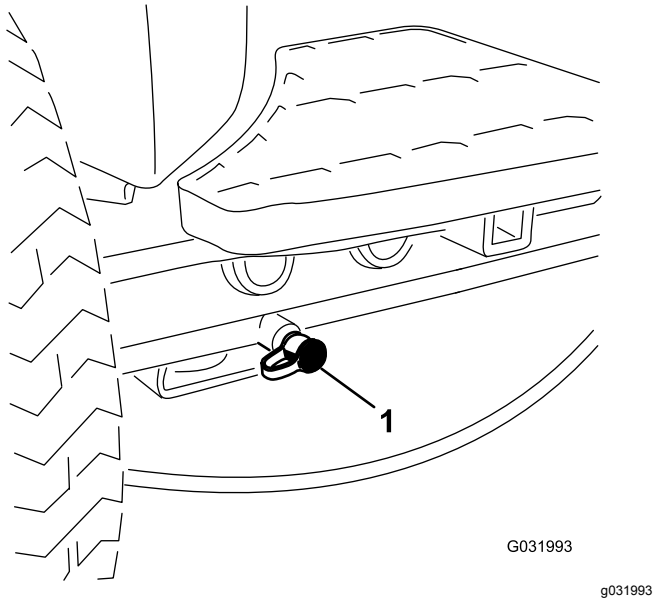

Figure 94

1. Traction-circuit test port

Use the test ports on the mow manifold block to assist in troubleshooting the mow circuit (Figure 95).

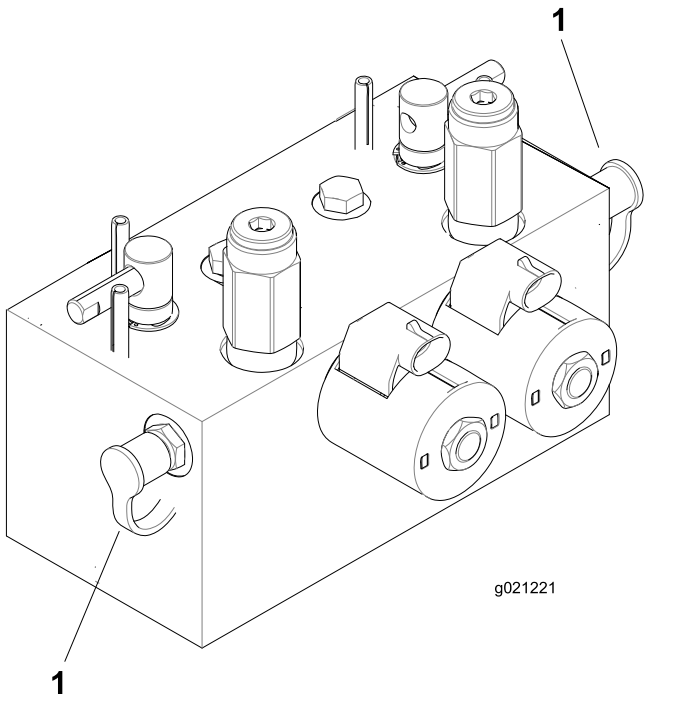

g021221

Figure 95

1. Mow-circuit test ports

Use the test port on the lift manifold block to assist in troubleshooting the lift circuit (Figure 96).

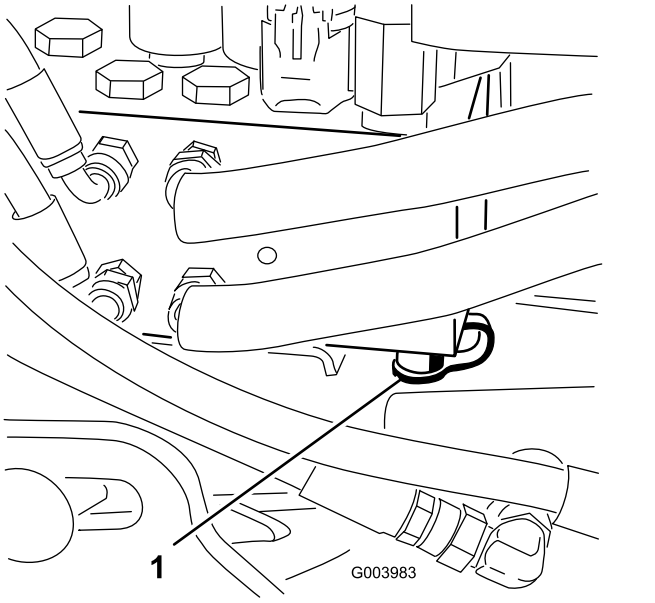

g003983

Figure 96

1. Lift-circuit test port

Cutting Unit System Maintenance

Backlapping the Cutting Units

⚠ WARNING

Contact with the reels or other moving parts can result in personal injury.

- **Keep fingers, hands, and clothing away from the reels or other moving parts.**
- **Never attempt to turn the reels by hand or foot while the engine is running.**

Note: When backlapping, the front units all operate together, and the rear units operate together.

1. Position the machine on a level surface, lower the cutting units, stop the engine, engage the parking brake, and move the Enable/Disable switch to the DISABLE position.
2. Unlock and raise the seat to expose the backlap levers (Figure 97).
3. Make initial reel-to-bedknife adjustments appropriate for backlapping on all cutting units that are to be backlapped; refer to the *Operator's Manual* for the cutting units.
4. Start the engine and run at low idle speed.

⚠ DANGER

Changing the engine speed while backlapping may cause the reels to stall.

- **Never change the engine speed while backlapping.**
- **Only backlap at idle engine speed.**

5. Select either front, rear, or both backlap levers to determine which units to backlap (Figure 97).

⚠ DANGER

To avoid personal injury, be certain that you are clear of the cutting units before proceeding.

6. With the Mow/Transport lever in the MOW position, move the Enable/Disable switch to the ENABLE position. Move the Lower Mow/Lift control forward to start the backlapping operation on the designated reels.
7. Apply lapping compound with a long-handled brush.

Important: **Never use a short-handled brush.**

8. If the reels stall or become erratic while backlapping, select a higher reel-speed setting until the speed stabilizes, then return the reel speed to your desired speed.
9. To adjust the cutting units while backlapping, turn the reels off by moving the Lower Mow/Raise lever rearward; the Enable/Disable switch to the DISABLE position, and stop the engine.

   After completing adjustments, repeat steps 4 through 8.

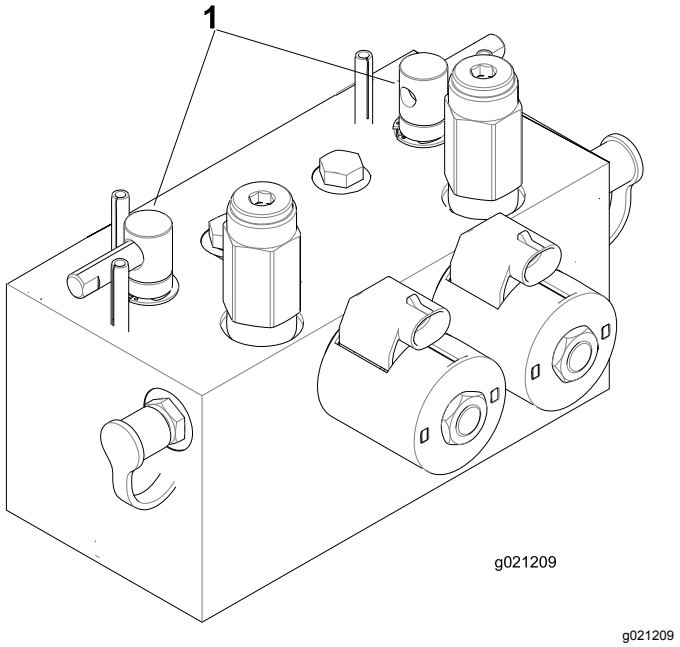

g021209

Figure 97

1. Backlap levers

10. Repeat the procedure for all cutting units you want to backlap.
11. When finished, return the backlap levers to the MOW position, lower the seat, and wash all lapping compound off the cutting units.

    Note: Adjust the cutting-unit reel to bedknife as needed. Adjust the cutting-unit reel speed to the desired mowing setting.

    Important: **If the backlap switch is not returned to the OFF position after backlapping, the cutting units do not raise or function properly.**

    Note: For a better cutting edge, run a file across the front face of the bedknife after lapping. This removes any burrs or rough edges that may have built up on the cutting edge.

Storage

Preparing the Traction Unit

1. Thoroughly clean the traction unit, cutting units, and engine.
2. Check the tire pressure. Inflate all traction unit tires to 83 to 103 kPa (12 to 15 psi).
3. Check all fasteners for looseness and tighten them as necessary.
4. Grease all grease fittings and pivot points. Wipe up any excess lubricant.
5. Lightly sand and use touch-up paint on painted areas that are scratched, chipped, or rusted. Repair any dents in the metal body.
6. Service the battery and cables as follows:
   A. Remove the battery terminals from the battery posts.
   B. Clean the battery, terminals, and posts with a wire brush and baking soda solution.
   C. Coat the cable terminals and battery posts with Grafo 112X skin-over grease (Toro Part Number 505-47) or petroleum jelly to prevent corrosion.
   D. Slowly recharge the battery every 60 days for 24 hours to prevent lead sulfation of the battery.

Preparing the Engine

1. Drain the engine oil from the oil pan and replace the drain plug.
2. Remove and discard the oil filter. Install a new oil filter.
3. Refill the oil pan with designated quantity of motor oil.
4. Start the engine and run it at idle speed for approximately 2 minutes.
5. Stop the engine.
6. Flush the fuel tank with fresh, clean diesel fuel.
7. Check antifreeze protection and add a 50/50 solution of water and antifreeze as needed for expected minimum temperature in your area.
8. Secure all fuel-system fittings.
9. Thoroughly clean and service the air-cleaner assembly.
10. Seal the air-cleaner inlet and the exhaust outlet with weatherproof tape.
11. Check the antifreeze protection and add as needed for expected minimum temperature in your area.

Notes:

Notes:

International Distributor List

Distributor:	Country:	Phone Number:	Distributor:	Country:	Phone Number:
Agrolanc Kft	Hungary	36 27 539 640	Maquiver S.A.	Colombia	57 1 236 4079
Asian American Industrial (AAI)	Hong Kong	852 2497 7804	Maruyama Mfg. Co. Inc.	Japan	81 3 3252 2285
B-Ray Corporation	Korea	82 32 551 2076	Mountfield a.s.	Czech Republic	420 255 704 220
Brisa Goods LLC	Mexico	1 210 495 2417	Mountfield a.s.	Slovakia	420 255 704 220
Casco Sales Company	Puerto Rico	787 788 8383	Munditol S.A.	Argentina	54 11 4 821 9999
Ceres S.A.	Costa Rica	506 239 1138	Norma Garden	Russia	7 495 411 61 20
CSSC Turf Equipment (pvt) Ltd.	Sri Lanka	94 11 2746100	Oslinger Turf Equipment SA	Ecuador	593 4 239 6970
Cyril Johnston & Co.	Northern Ireland	44 2890 813 121	Oy Hako Ground and Garden Ab	Finland	358 987 00733
Cyril Johnston & Co.	Republic of Ireland	44 2890 813 121	Parkland Products Ltd.	New Zealand	64 3 34 93760
Fat Dragon	China	886 10 80841322	Perfetto	Poland	48 61 8 208 416
Femco S.A.	Guatemala	502 442 3277	Pratoverde SRL.	Italy	39 049 9128 128
FIVEMANS New-Tech Co., Ltd	China	86-10-6381 6136	Prochaska & Cie	Austria	43 1 278 5100
ForGarder OU	Estonia	372 384 6060	RT Cohen 2004 Ltd.	Israel	972 986 17979
G.Y.K. Company Ltd.	Japan	81 726 325 861	Riversa	Spain	34 9 52 83 7500
Geomechaniki of Athens	Greece	30 10 935 0054	Lely Turfcare	Denmark	45 66 109 200
Golf international Turizm	Turkey	90 216 336 5993	Lely (U.K.) Limited	United Kingdom	44 1480 226 800
Hako Ground and Garden	Sweden	46 35 10 0000	Solvert S.A.S.	France	33 1 30 81 77 00
Hako Ground and Garden	Norway	47 22 90 7760	Spypros Stavrinides Limited	Cyprus	357 22 434131
Hayter Limited (U.K.)	United Kingdom	44 1279 723 444	Surge Systems India Limited	India	91 1 292299901
Hydroturf Int. Co Dubai	United Arab Emirates	97 14 347 9479	T-Markt Logistics Ltd.	Hungary	36 26 525 500
Hydroturf Egypt LLC	Egypt	202 519 4308	Toro Australia	Australia	61 3 9580 7355
Irrimac	Portugal	351 21 238 8260	Toro Europe NV	Belgium	32 14 562 960
Irrigation Products Int'l Pvt Ltd.	India	0091 44 2449 4387	Valtech	Morocco	212 5 3766 3636
Jean Heybroek b.v.	Netherlands	31 30 639 4611	Victus Emak	Poland	48 61 823 8369

European Privacy Notice

The Information Toro Collects
Toro Warranty Company (Toro) respects your privacy. In order to process your warranty claim and contact you in the event of a product recall, we ask you to share certain personal information with us, either directly or through your local Toro company or dealer.

The Toro warranty system is hosted on servers located within the United States where privacy law may not provide the same protection as applies in your country.

BY SHARING YOUR PERSONAL INFORMATION WITH US, YOU ARE CONSENTING TO THE PROCESSING OF YOUR PERSONAL INFORMATION AS DESCRIBED IN THIS PRIVACY NOTICE.

The Way Toro Uses Information
Toro may use your personal information to process warranty claims, to contact you in the event of a product recall and for any other purpose which we tell you about. Toro may share your information with Toro's affiliates, dealers or other business partners in connection with any of these activities. We will not sell your personal information to any other company. We reserve the right to disclose personal information in order to comply with applicable laws and with requests by the appropriate authorities, to operate our systems properly or for our own protection or that of other users.

Retention of your Personal Information
We will keep your personal information as long as we need it for the purposes for which it was originally collected or for other legitimate purposes (such as regulatory compliance), or as required by applicable law.

Toro's Commitment to Security of Your Personal Information
We take reasonable precautions in order to protect the security of your personal information. We also take steps to maintain the accuracy and current status of personal information.

Access and Correction of your Personal Information
If you would like to review or correct your personal information, please contact us by email at legal@toro.com.

Australian Consumer Law

Australian customers will find details relating to the Australian Consumer Law either inside the box or at your local Toro Dealer.

The Toro Warranty

A Two-Year Limited Warranty

Conditions and Products Covered

The Toro Company and its affiliate, Toro Warranty Company, pursuant to an agreement between them, jointly warrant your Toro Commercial product ("Product") to be free from defects in materials or workmanship for two years or 1500 operational hours*, whichever occurs first. This warranty is applicable to all products with the exception of Aerators (refer to separate warranty statements for these products). Where a warrantable condition exists, we will repair the Product at no cost to you including diagnostics, labor, parts, and transportation. This warranty begins on the date the Product is delivered to the original retail purchaser.
* Product equipped with an hour meter.

Instructions for Obtaining Warranty Service

You are responsible for notifying the Commercial Products Distributor or Authorized Commercial Products Dealer from whom you purchased the Product as soon as you believe a warrantable condition exists. If you need help locating a Commercial Products Distributor or Authorized Dealer, or if you have questions regarding your warranty rights or responsibilities, you may contact us at:

Toro Commercial Products Service Department
Toro Warranty Company
8111 Lyndale Avenue South
Bloomington, MN 55420-1196

952–888–8801 or 800–952–2740
E-mail: commercial.warranty@toro.com

Owner Responsibilities

As the Product owner, you are responsible for required maintenance and adjustments stated in your *Operator's Manual*. Failure to perform required maintenance and adjustments can be grounds for disallowing a warranty claim.

Items and Conditions Not Covered

Not all product failures or malfunctions that occur during the warranty period are defects in materials or workmanship. This warranty does not cover the following:

- Product failures which result from the use of non-Toro replacement parts, or from installation and use of add-on, or modified non-Toro branded accessories and products. A separate warranty may be provided by the manufacturer of these items.
- Product failures which result from failure to perform recommended maintenance and/or adjustments. Failure to properly maintain your Toro product per the Recommended Maintenance listed in the *Operator's Manual* can result in claims for warranty being denied.
- Product failures which result from operating the Product in an abusive, negligent, or reckless manner.
- Parts subject to consumption through use unless found to be defective. Examples of parts which are consumed, or used up, during normal Product operation include, but are not limited to, brake pads and linings, clutch linings, blades, reels, rollers and bearings (sealed or greasable), bed knives, spark plugs, castor wheels and bearings, tires, filters, belts, and certain sprayer components such as diaphragms, nozzles, and check valves, etc.
- Failures caused by outside influence. Conditions considered to be outside influence include, but are not limited to, weather, storage practices, contamination, use of unapproved fuels, coolants, lubricants, additives, fertilizers, water, or chemicals, etc.
- Failure or performance issues due to the use of fuels (e.g. gasoline, diesel, or biodiesel) that do not conform to their respective industry standards.
- Normal noise, vibration, wear and tear, and deterioration.
- Normal "wear and tear" includes, but is not limited to, damage to seats due to wear or abrasion, worn painted surfaces, scratched decals or windows, etc.

Parts

Parts scheduled for replacement as required maintenance are warranted for the period of time up to the scheduled replacement time for that part. Parts replaced under this warranty are covered for the duration of the original product warranty and become the property of Toro. Toro will make the final decision whether to repair any existing part or assembly or replace it. Toro may use remanufactured parts for warranty repairs.

Deep Cycle and Lithium-Ion Battery Warranty:

Deep cycle and Lithium-Ion batteries have a specified total number of kilowatt-hours they can deliver during their lifetime. Operating, recharging, and maintenance techniques can extend or reduce total battery life. As the batteries in this product are consumed, the amount of useful work between charging intervals will slowly decrease until the battery is completely worn out. Replacement of worn out batteries, due to normal consumption, is the responsibility of the product owner. Battery replacement may be required during the normal product warranty period at owner's expense. Note: (Lithium-Ion battery only): A Lithium-Ion battery has a part only prorated warranty beginning year 3 through year 5 based on the time in service and kilowatt hours used. Refer to the *Operator's Manual* for additional information.

Maintenance is at Owner's Expense

Engine tune-up, lubrication, cleaning and polishing, replacement of filters, coolant, and completing recommended maintenance are some of the normal services Toro products require that are at the owner's expense.

General Conditions

Repair by an Authorized Toro Distributor or Dealer is your sole remedy under this warranty.

Neither The Toro Company nor Toro Warranty Company is liable for indirect, incidental or consequential damages in connection with the use of the Toro Products covered by this warranty, including any cost or expense of providing substitute equipment or service during reasonable periods of malfunction or non-use pending completion of repairs under this warranty. Except for the Emissions warranty referenced below, if applicable, there is no other express warranty. All implied warranties of merchantability and fitness for use are limited to the duration of this express warranty.

Some states do not allow exclusions of incidental or consequential damages, or limitations on how long an implied warranty lasts, so the above exclusions and limitations may not apply to you. This warranty gives you specific legal rights, and you may also have other rights which vary from state to state.

Note regarding engine warranty:

The Emissions Control System on your Product may be covered by a separate warranty meeting requirements established by the U.S. Environmental Protection Agency (EPA) and/or the California Air Resources Board (CARB). The hour limitations set forth above do not apply to the Emissions Control System Warranty. Refer to the Engine Emission Control Warranty Statement supplied with your product or contained in the engine manufacturer's documentation for details

Countries Other than the United States or Canada

Customers who have purchased Toro products exported from the United States or Canada should contact their Toro Distributor (Dealer) to obtain guarantee policies for your country, province, or state. If for any reason you are dissatisfied with your Distributor's service or have difficulty obtaining guarantee information, contact the Toro importer.

374-0253 Rev D