FORM NO. 3319–677GB

TORO®

53cm

Walk-behind Power Mower

Model No. 20709 — 8900001 & Up
Model No. 20711 — 8900001 & Up

Operator's Manual

Figures

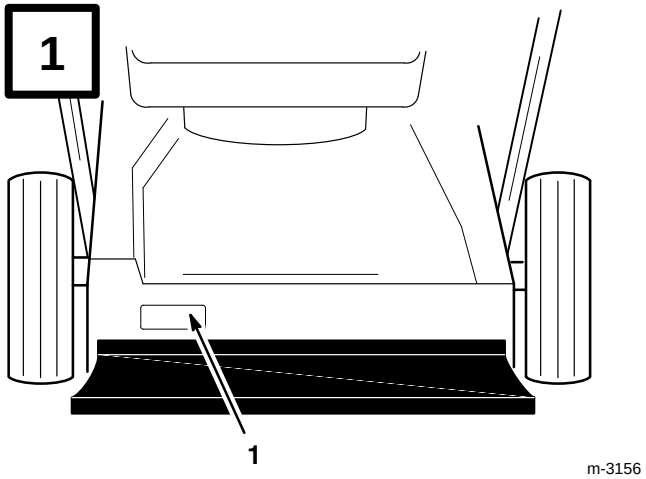

1. Model and serial number decal

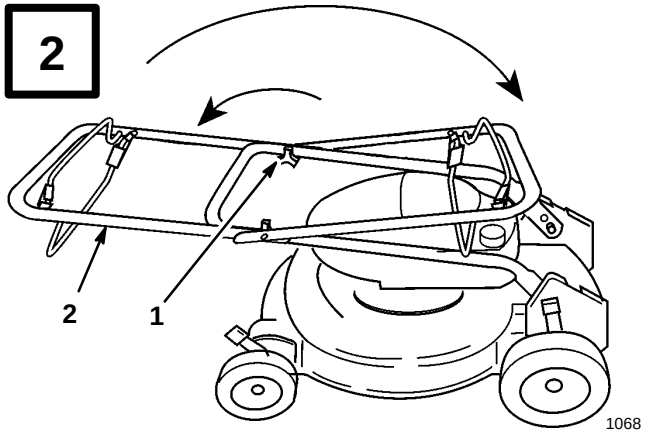

1. Knob
2. Top handle half

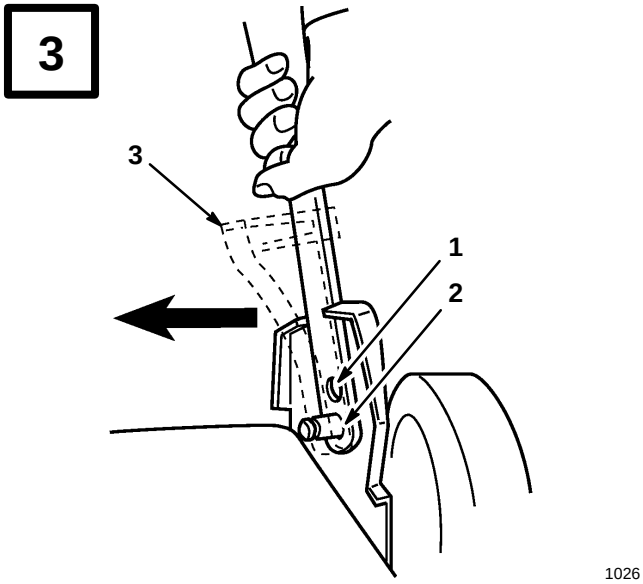

1. Low setting
2. High setting
3. Cable anchor – self-propelled model

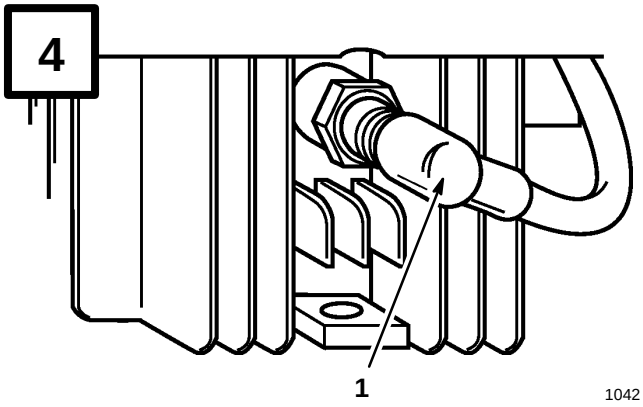

1. Spark plug wire

©The Toro Company – 1997
All Rights Reserved

Printed in USA

5

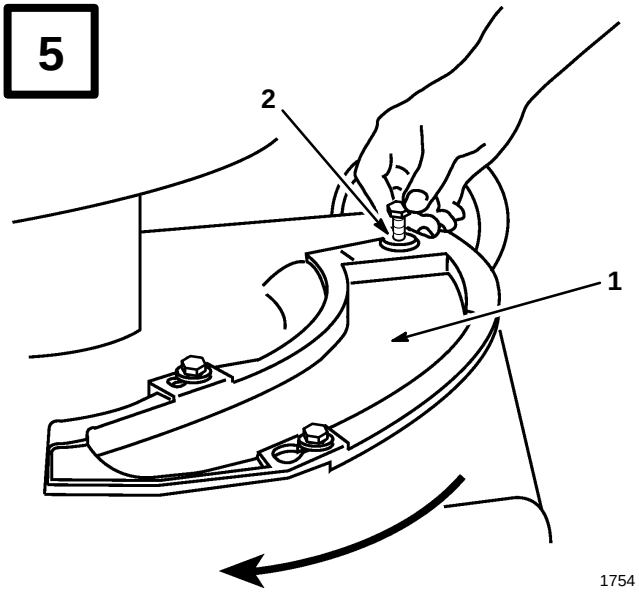

1754

1. Cover plate
2. Screw

6

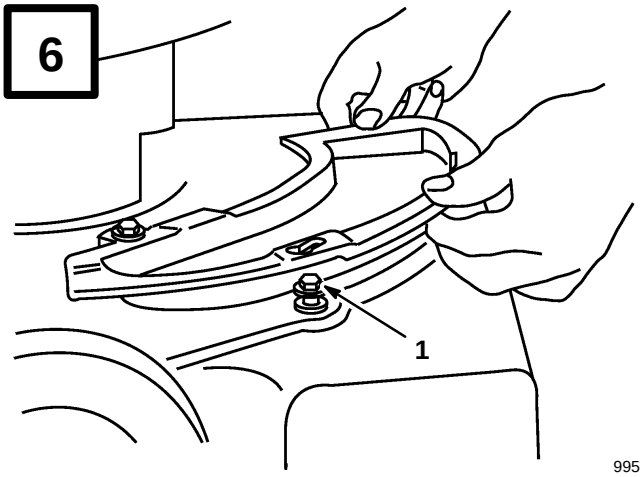

995

1. Shoulder bolt

7

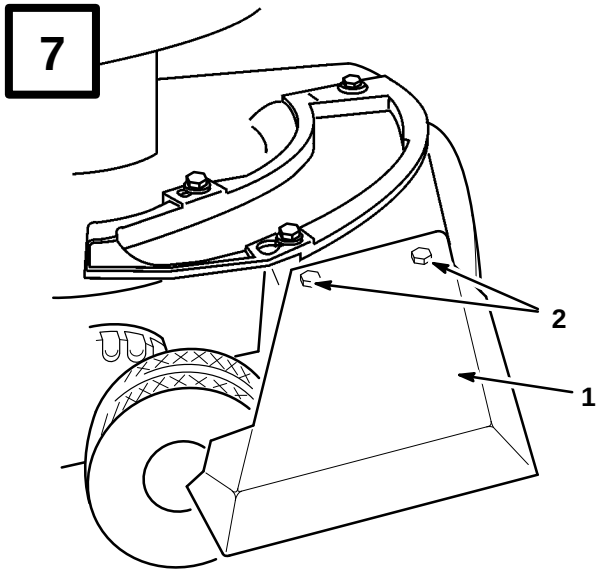

1756

1. Guard plate
2. Bolt and nut

8

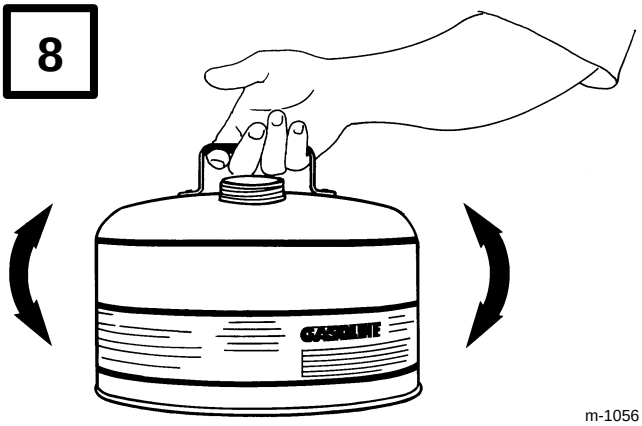

m-1056

9

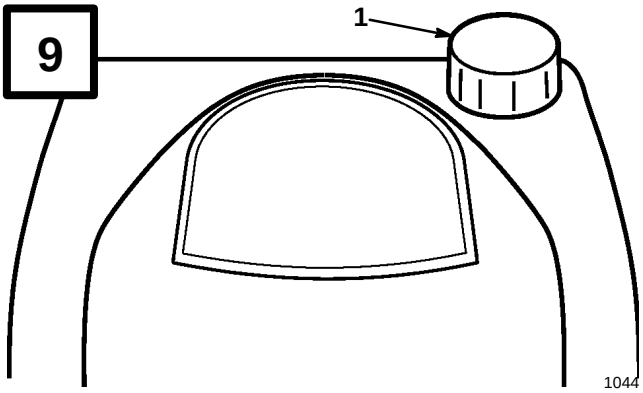

1044

1. Fuel tank cap

10

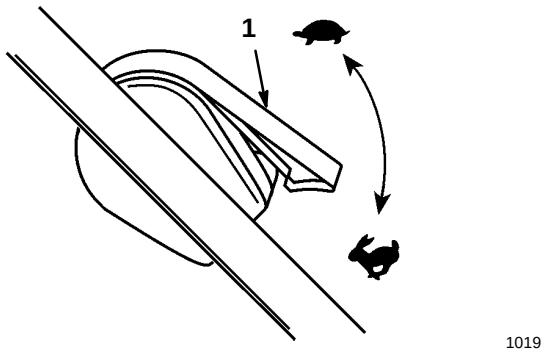

1019

1. Throttle lever

11

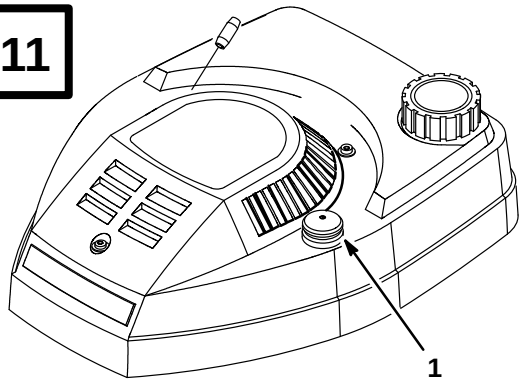

980

1. Primer

12

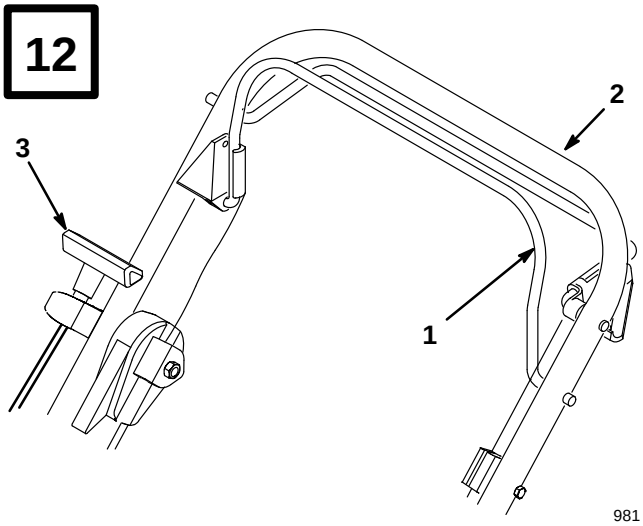

981

1. Blade control bail
2. Upper handle
3. Starter handle

13

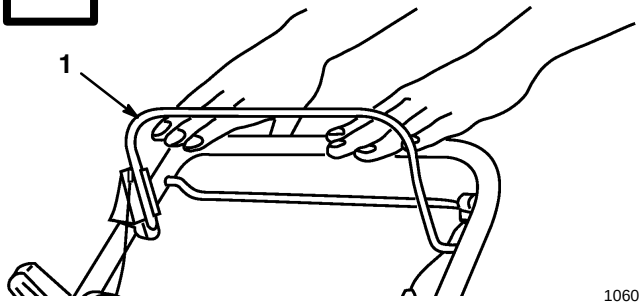

1060

1. Blade control bail

14

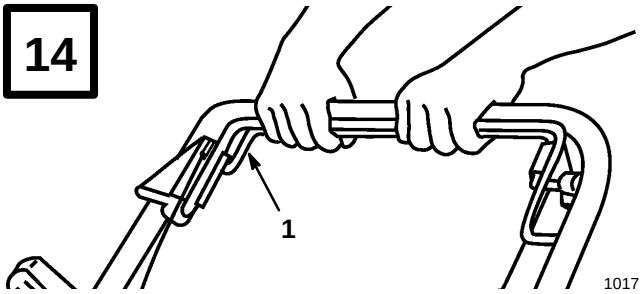

1017

1. Self-propelled bail

15

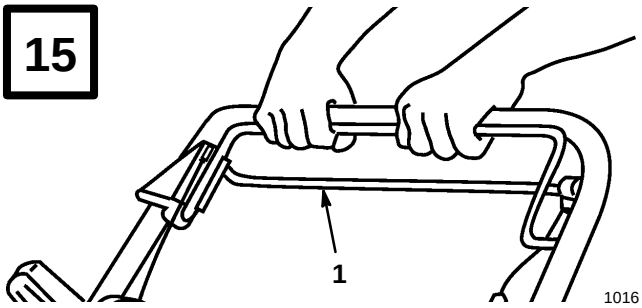

1016

1. Self-propelled bail

16

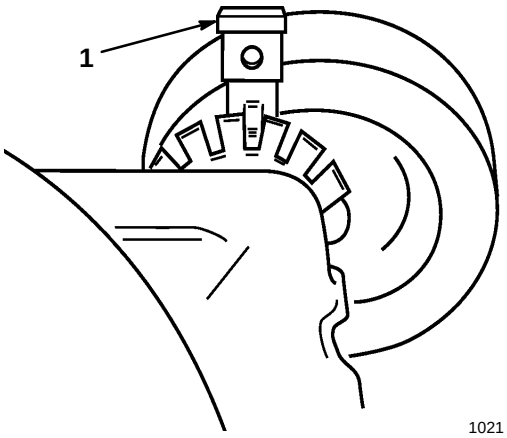

1021

1. Wheel height adjustment lever

17

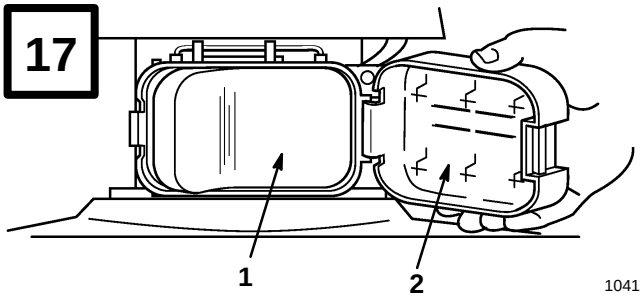

1041

1. Filter
2. Cover

18

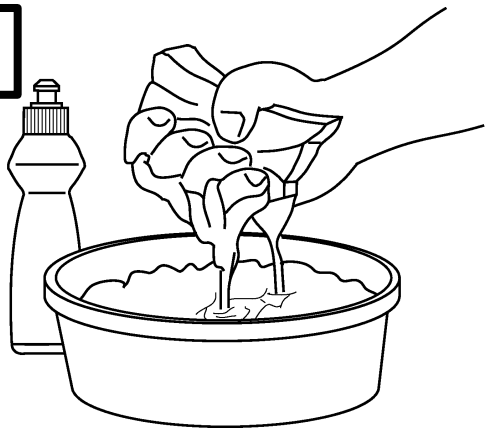

988

19

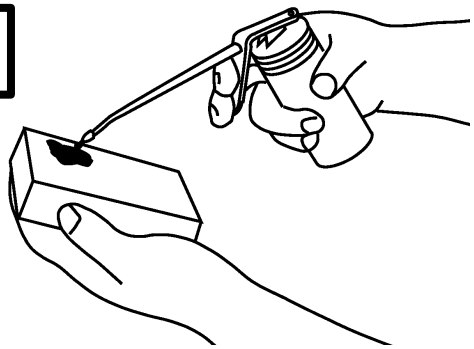

989

20

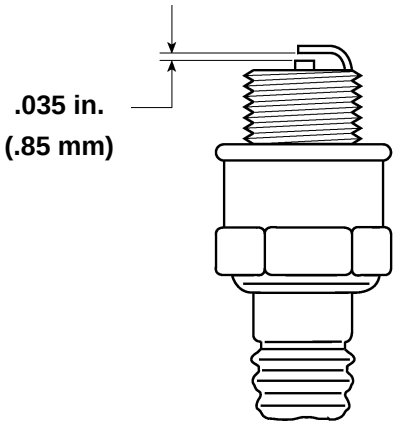

986

21

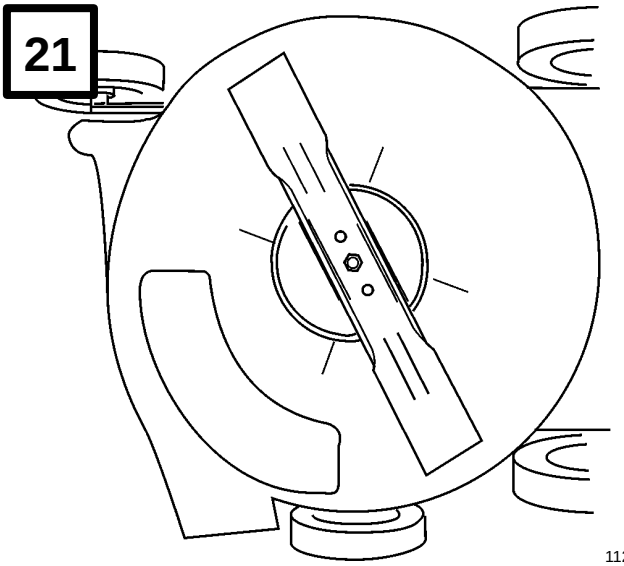

1128

22

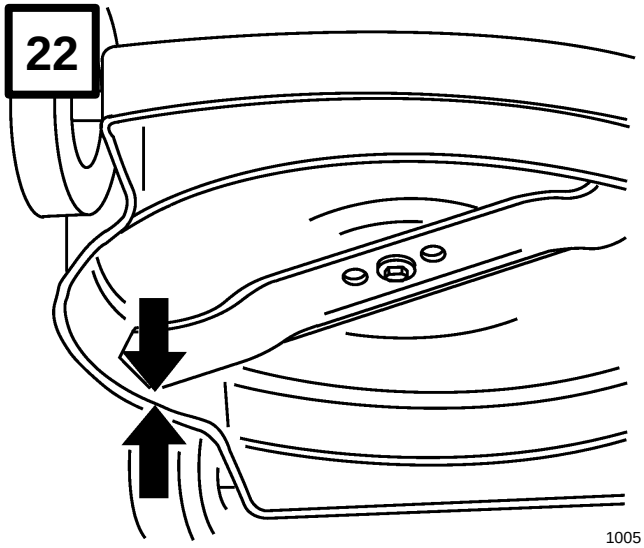

1005

23

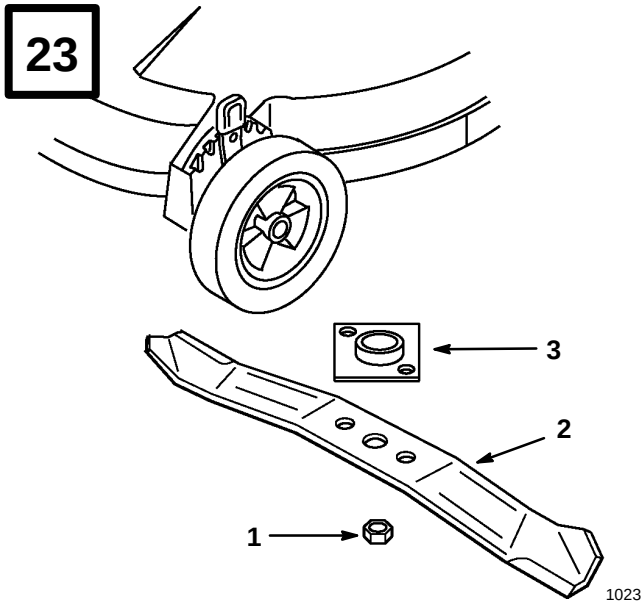

1023

1. Blade nut
2. Blade
3. Blade driver

24

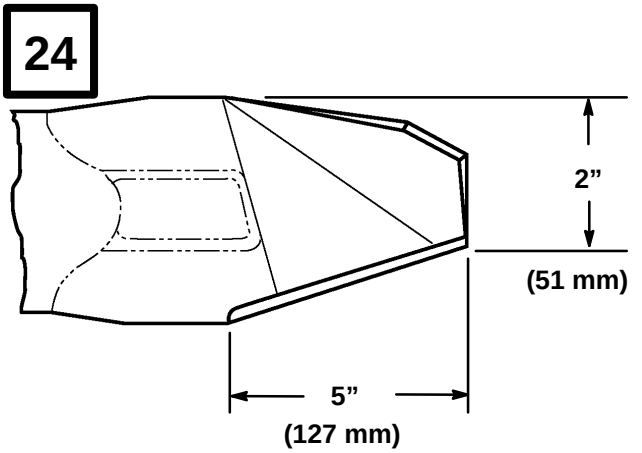

990

25

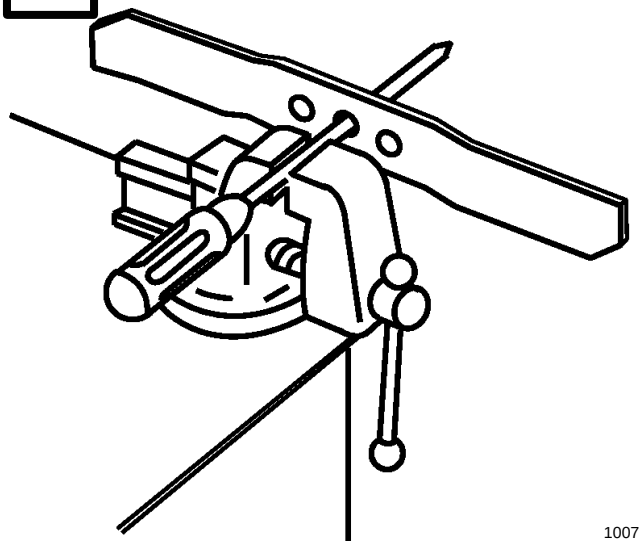

1007

26

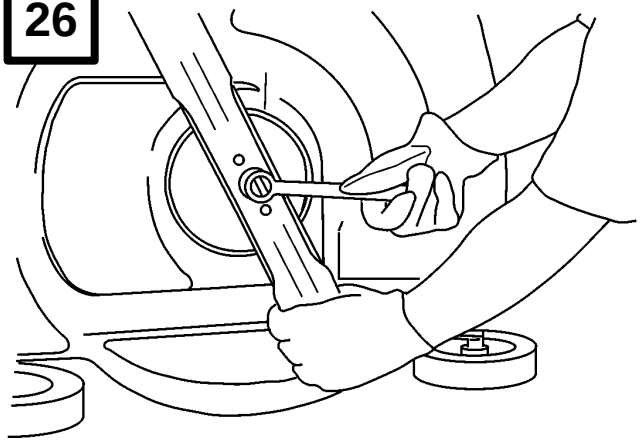

1025

27

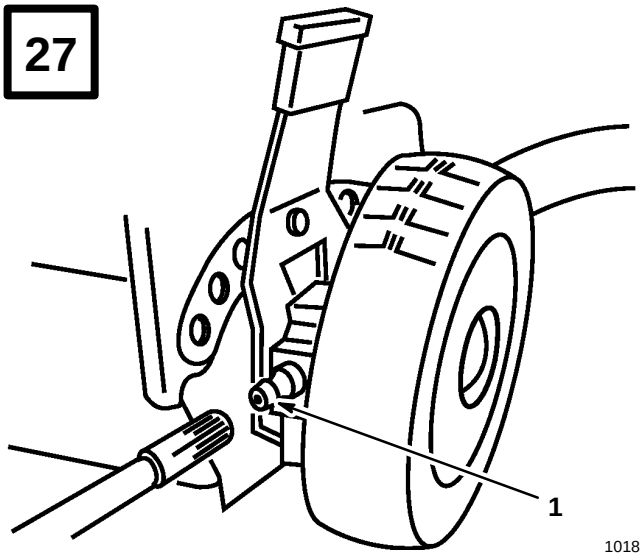

1018

1. Grease fitting

28

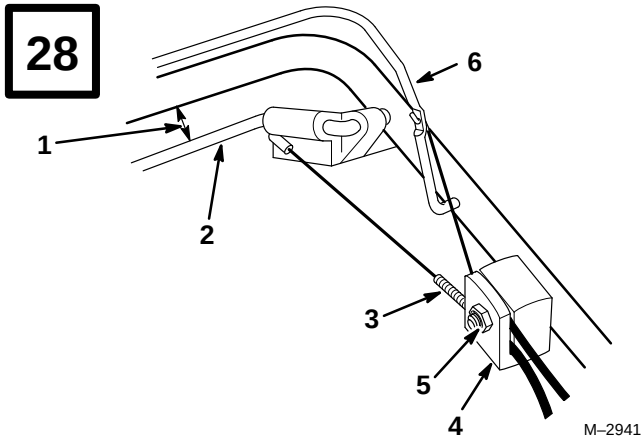

M–2941

1. 1 to 1 1/2 in. (25 to 38 mm)
2. Self -propel control
3. Cable jacket
4. Cable support
5. Nut
6. Blade brake control

29

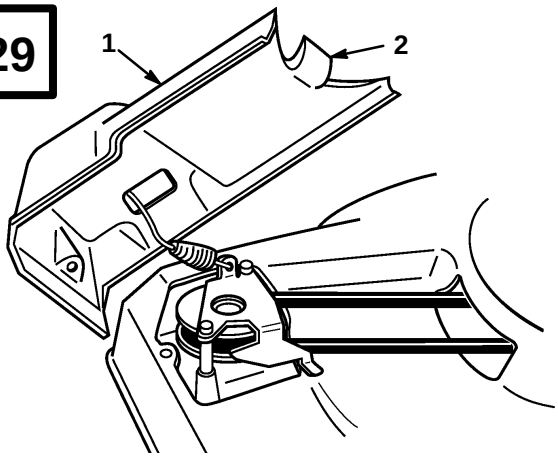

1040

1. Belt cover
2. Tab

30

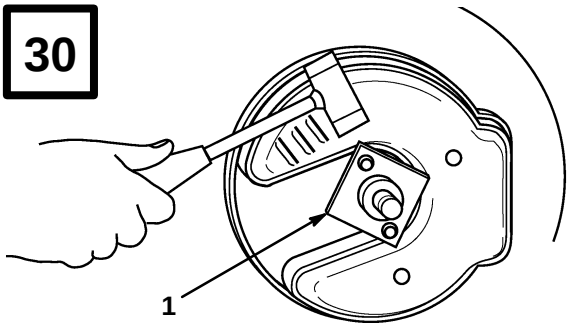

1028

1. Blade driver

31

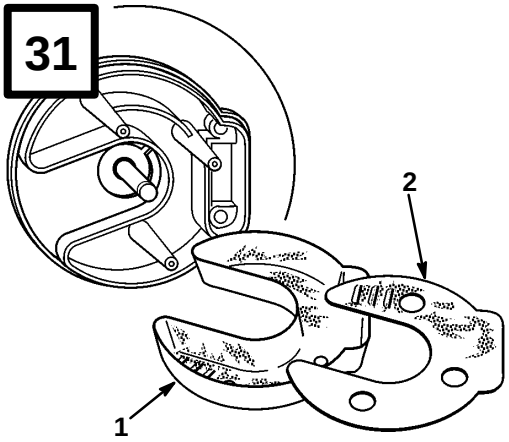

1029

1. Muffler cover
2. Baffle plate

32

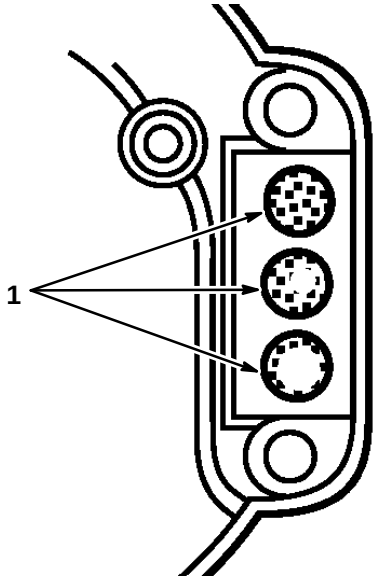

1030

1. Exhaust ports

33

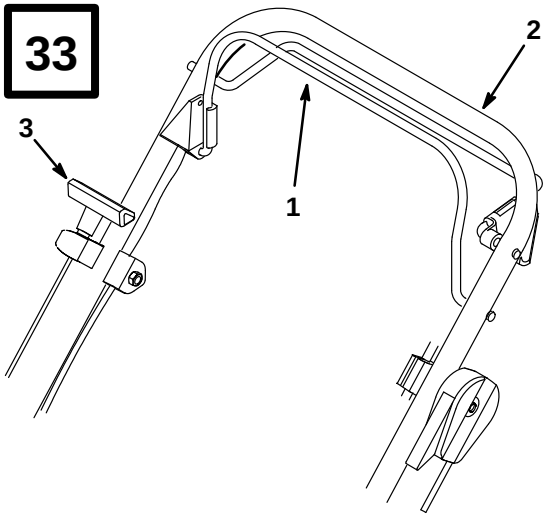

982

1. Blade control bail
2. Upper handle
3. Starter handle

34

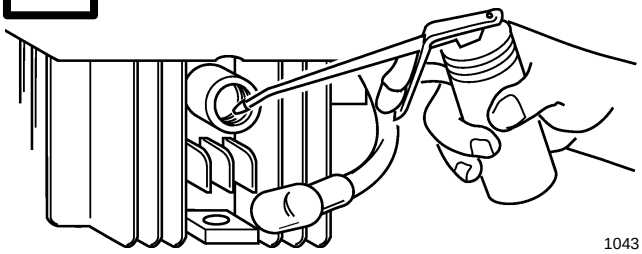

1043

35

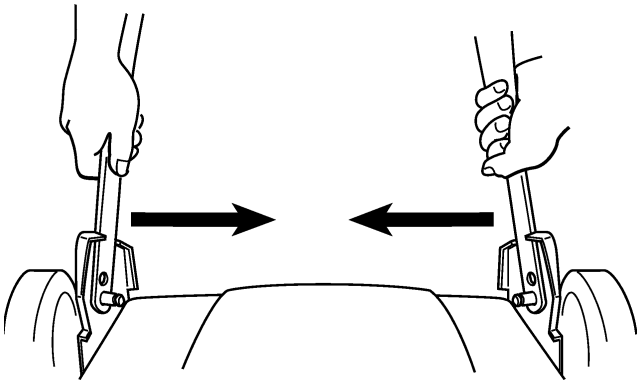

1039

36

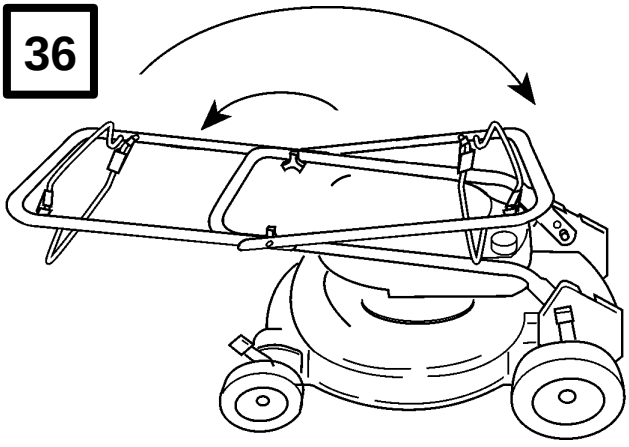

m–2876

Contents

	Page
Introduction	1
Safety	2
Training	2
Preparation	2
Operation	2
Maintenance And Storage	3
Sound Pressure Level	4
Sound Power Level	4
Vibration Level	4
Symbol Glossary	4
Assembly	7
Handle	7
Cover Plate and Guard Plate	7
Before Starting	8
Oil Mix Ratio	8
Mixing Gasoline And Oil	8
Lawn Preparation And Mowing	9
Operation	9
Starting Engine	9
Stopping Engine	9
Self–propelled Drive	10
Adjusting Cutting Height	10
Maintenance	11
Recommended Maintenance Schedule	11
Air Filter	12
Drain Gasoline	12
Spark Plug	12
Clean Mower Housing	13
Blade	13
Lubrication	14
Self-propelled Cable	14
Self-propelled Drive Cleaning	15
Exhaust Ports	15
Troubleshooting	16
Accessories	17
Storage	17
Fuel	17
Engine	17
Folding Handle	17
Removing From Storage	18

Introduction

Thank you for purchasing a Toro product.

All of us at Toro want you to be completely satisfied with your new product, so feel free to contact your local Authorized Service Dealer for help with service, genuine Toro parts, or other information you may require.

Whenever you contact your Authorized Service Dealer or the factory, always know the model and serial numbers of your product. These numbers will help the Service Dealer or Service Representative provide exact information about your specific product. You will find the model and serial number decal located in a unique place on the product (Fig. 1).

For your convenience, write the product model and serial numbers in the space below.

Model No. _____

Serial No. _____

Read this manual carefully to learn how to operate and maintain your product correctly. Reading this manual will help you and others avoid personal injury and damage to the product. Although Toro designs, produces and markets safe, state-of-the-art products, you are responsible for using the product properly and safely. You are also responsible for training persons who you allow to use the product about safe operation.

The Toro warning system in this manual identifies potential hazards and has special safety messages that help you and others avoid personal injury, even death. DANGER, WARNING and CAUTION are signal words used to identify the level of hazard. However, regardless of the hazard, be extremely careful.

DANGER signals an extreme hazard that will cause serious injury or death if the recommended precautions are not followed.

WARNING signals a hazard that may cause serious injury or death if the recommended precautions are not followed.

CAUTION signals a hazard that may cause minor or moderate injury if the recommended precautions are not followed.

Two other words are also used to highlight information. “Important” calls attention to special mechanical information and “Note” emphasizes general information worthy of special attention.

Safety

Training

1. Read the instructions carefully. Be familiar with the controls and the proper use of the equipment.

2. Never allow children or people unfamiliar with these instructions to use the lawnmower. Local regulations may restrict the age of the operator.

3. Always wear safety glasses or eye shields during operation to protect eyes from foreign objects that may be thrown from the machine. Wearing of hearing protection, protective gloves and a safety helmet is advisable and may be required by local regulations.

4. Never mow while people, especially children, or pets are nearby.

5. Keep in mind that the operator or user is responsible for accidents or hazards occurring to other people or their property.

Preparation

1. While mowing, always wear substantial footwear and long trousers. Do not operate the equipment when barefoot or wearing open sandals.

2. Thoroughly inspect the area where the equipment is to be used and remove all objects which may be thrown by the machine.

3. WARNING – Petrol is highly flammable.

- Store fuel in containers specifically designed for this purpose.
- Refuel outdoors only and do not smoke while refuelling.
- Add fuel before starting the engine. Never remove the cap of the fuel tank or add petrol while the engine is running or when the engine is hot.
- If petrol is spilled, do not attempt to start the engine but move the machine away from the area of spillage and avoid creating any source of ignition until petrol vapors have dissipated.
- Replace all fuel tanks and container caps securely.

4. Replace faulty silencers.

5. Before using, always visually inspect to see that the blades, blade nuts and cutter assembly are not worn or damaged. Replace worn or damaged blades and nuts in sets to preserve balance.

6. On multi-bladed machines, take care as rotating one blade can cause other blades to rotate.

Operation

1. Do not operate the engine in a confined space where dangerous carbon monoxide fumes can collect.

2. Mow only in daylight or in good artificial light.

3. Avoid operating the equipment in wet grass, where feasible.

4. Always be sure of your footing on slopes.

5. Walk, never run.

6. For wheeled rotary machines, mow across the face of slopes, never up and down.

7. Exercise extreme caution when changing direction on slopes.

8. Do not mow excessively steep slopes.

9. Use extreme caution when reversing or pulling the lawnmower towards you.

10. Stop the blade(s) if the lawnmower has to be tilted for transportation when crossing surfaces other than grass, and when transporting the lawnmower to and from the area to be mowed.

11. Never operate the lawnmower with defective guards or shields, or without safety devices, for example deflectors and/or grass catchers, in place.

12. Do not change the engine governor settings or overspeed the engine.

13. Disengage all blade and drive clutches before starting the engine.

14. Start the engine or switch on the motor carefully according to instructions and with feet well away from the blade(s).

15. Do not tilt the lawnmower when starting the engine or switching on the motor, except if the lawnmower has to be tilted for starting. In this case, do not tilt it more than absolutely necessary and lift only the part which is away from the operator.

16. Do not start the engine when standing in front of the discharge chute.

17. Do not put hands or feet near or under rotating parts. Keep clear of the discharge opening at all times.

18. Never pick up or carry a lawnmower while the engine is running.

19. Stop the engine and disconnect the spark plug wire.

- before clearing blockages or unclogging chute;
- before checking, cleaning or working on the lawnmower;
- after striking a foreign object. Inspect the lawnmower for damage and make repairs before restarting and operating the lawnmower;
- if lawnmower starts to vibrate abnormally (check immediately).

20. Stop the engine

- whenever you leave the lawnmower;
- before refuelling.

21. Reduce the throttle setting during engine shut down and, if the engine is provided with a shut-off valve, turn the fuel off at the conclusion of mowing.

22. Go slow when using a trailing seat.

Maintenance And Storage

1. Keep all nuts, bolts and screws tight to be sure the equipment is in safe working condition.

2. Never store the equipment with petrol in the tank inside a building where fumes may reach an open flame or spark.

3. Allow the engine to cool before storing in any enclosure.

4. To reduce the fire hazard, keep the engine, silencer, battery compartment and petrol storage area free of grass, leaves, or excessive grease.

5. Check the grass catcher frequently for wear or deterioration.

6. Replace worn or damaged parts for safety.

7. If the fuel tank has to be drained, this should be done outdoors.

Sound Pressure Level

This unit has an equivalent continuous A-weighted sound pressure at the operator ear of: 88.5 dB(A), based on measurements of identical machines per ANSI B71.5-1984 procedures.

Sound Power Level

This unit has a sound power level of: 100 dB(A)/1 pW, based on measurements of identical machines per Directive 84/538/EEC and amendments.

Vibration Level

This unit has a maximum hand-arm vibration level of 10.51 m/s^2, based on measurement of identical machines per ISO 5349 procedures.

Symbol Glossary

Safety alert triangle — symbol within triangle indicates a hazard.

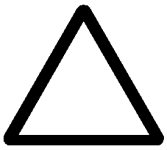

Safety alert symbol



Read operator's manual.



Consult technical manual for proper service procedures.



Stay a safe distance from the machine.

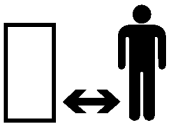

Stay a safe distance from the mower.

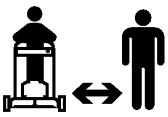

Do not open or remove safety shields while engine is running.

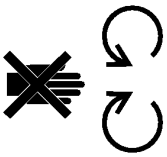

Rotating blade can cut off toes or fingers. Stay clear of mower blade as long as engine is running.



To avoid blade failure when mulching, use blade stiffener when mower is equipped with mulching plug.

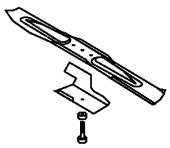

Transmission

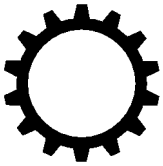

Oil



On/Run

Throw or flying objects — Whole body exposure

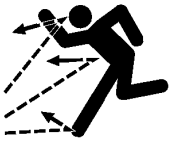

Thrown or flying objects — Rotary side-mounted mower. Keep deflector shield in place.

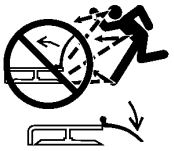

Stop engine before leaving operator position.



Hourmeter/elapsed operating hours

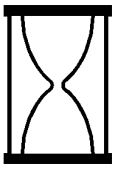

Fast



Slow



Decreasing/Increasing



Grease lubrication point



Engage

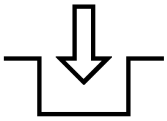

Disengage

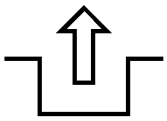

Battery charging condition

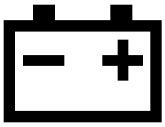

Fuel



Neutral



First gear



Second gear



Third gear



Engine start

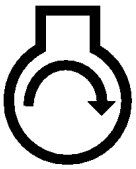

Cutting element — basic symbol



Engine stop



Choke

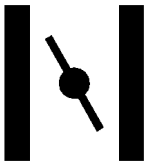

Primer (start aid)



Push primer three times.

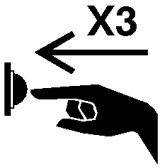

Properly dispose of batteries.



Insert key in ignition switch.

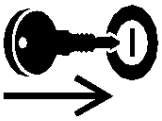

Turn key in ignition switch.



Move control.

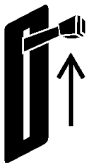

Cutting element — height adjustment



Pull rope.



Wheel

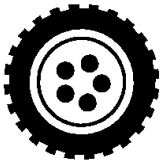

Wheel traction

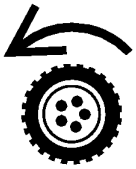

Lower control bar.



Raise control bar.



Raise/lower control bar.



Raise/lower control bar.

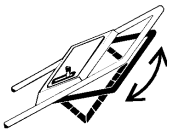

Raise control bar.



Raise control bar.



Lower control bar.



Assembly

Handle

Assembly

1. Loosen handle knobs and lift top handle half in an arc until handle halves are in line and nest together (Fig. 2).

   Note: Use care to prevent pinching or stretching of cables.

2. Tighten knobs securely.

   Note: Rotate handle toward rear of mower until it snaps into stops in handle brackets.

Handle Height

The handle has two height positions — high and low (Fig. 3). Select a handle height position that is most comfortable for you.

1. To change handle height, squeeze bottom handle section together and align holes over pins inside handle brackets.

(Self–propelled Models Only)

1. Slide cable anchor on handle to align hole and locate over pin inside handle bracket.

   Note: Belt cover may need to be loosened and slightly moved out of the way to make enough room to place handle in high height setting.

2. Adjust self–propelled cable. See Maintenance section.

Cover Plate and Guard Plate

Your mower was shipped with a cover plate and guard plate. For side discharge operation the cover plate must be installed in the deck opening and the guard plate over the side discharge opening.

⚠ WARNING

POTENTIAL HAZARD

- **An uncovered discharge opening will allow objects to be thrown in operator's or bystander's direction. Also, contact with blade could occur.**

WHAT CAN HAPPEN

- **Thrown objects or blade contact can cause serious injury.**

HOW TO AVOID THE HAZARD

- **Never operate mower unless cover plate, guard plate or optional grass chute and catcher are installed.**

1. Stop engine and disconnect spark plug wire (Fig. 4) before installing or removing cover plate.

2. Remove screw that fastens cover plate to the housing (Fig. 5).

3. Two shoulder bolts on the housing protrude through slotted holes in the cover plate and do not have to be loosened or removed. Cover plate moves over the shoulder bolt heads (Fig. 6).

4. Slide cover plate clockwise to install or counterclockwise to remove.

5. Secure with screw.

6. Install guard plate over side discharge opening (Fig. 7).

7. Secure with two bolts and nuts.

8. Connect spark plug wire (Fig. 4).

Before Starting

Oil Mix Ratio

Your Toro mower is powered by a 2-cycle engine which requires a 32:1 mixture of gasoline and oil. Failure to use the right mixture will result in serious engine damage.

Toro Two-Cycle Oil is specially formulated to provide superior lubrication, make starting easy and prolong engine life. If Toro Two-Cycle Oil is not available, mix two gallons of gasoline with 8 ounces of another high grade two-cycle oil that the NMMA or BIA-TCW certification printed on the label.

IMPORTANT: Never use automotive oil (i.e. SAE 30, 10W30 etc.), two-cycle oil that is not certified NMMA/BIA-TCW or the wrong mix ratio because the engine can be damaged, and it would not be covered by the Toro warranty.

⚠ DANGER

POTENTIAL HAZARD
- **In certain conditions gasoline is extremely flammable and highly explosive.**

WHAT CAN HAPPEN
- **A fire or explosion from gasoline can burn you, others, and cause property damage.**

HOW TO AVOID THE HAZARD
- **Use a funnel and fill the fuel tank outdoors, in an open area, when the engine is cold. Wipe up any gasoline that spills.**
- **Do not fill the fuel tank completely full. Add gasoline to the fuel tank until the level is 1/4” to 1/2” (6 mm to 13 mm) below the bottom of the filler neck. This empty space in the tank allows gasoline to expand.**
- **Never smoke when handling gasoline, and stay away from an open flame or where gasoline fumes may be ignited by a spark.**
- **Store gasoline in an approved container and keep it out of the reach of children.**
- **Never buy more than a 30-day supply of gasoline.**

Mixing Gasoline And Oil

This engine is certified to operate on unleaded gasoline. The Toro Company strongly recommends the use of fresh, clean, **UNLEADED** regular grade gasoline with an octane rating of 85 or higher in Toro gasoline powered products. Unleaded gasoline burns cleaner, extends engine life, and promotes good starting by reducing the build-up of combustion chamber deposits. In countries other than U.S.A., leaded gasoline may be used if it is commercially available and unleaded is unavailable.

For simplicity and best engine performance, mix 8 ounces of Toro Two–Cycle Oil with two gallons of fresh, unleaded regular gasoline. Pour one gallon of gasoline into an approved gasoline container and add the correct amount of two–cycle oil. Install cap on gasoline container and shake to mix oil and gasoline thoroughly (Fig. 8). Slowly remove cap and add remaining gasoline.

Note: Do not mix gasoline and oil in the product fuel tank. Oil that is at room temperature mixes easily and more thoroughly than cold oil.

Note: NEVER USE METHANOL, GASOLINE CONTAINING METHANOL, GASOHOL CONTAINING MORE THAN 10% ETHANOL, PREMIUM GASOLINE OR WHITE GAS BECAUSE ENGINE FUEL SYSTEM COULD BE DAMAGED.

1. Clean around fuel cap before removing (Fig. 9). Fill fuel tank with gasoline/oil mix to bottom of filler neck, not into filler neck. DO NOT OVER–FILL TANK. Replace fuel cap securely and wipe up any spilled fuel.

Toro recommends that Toro Stabilizer/Conditioner be used regularly in all Toro gasoline powered products during operation and storage seasons. Toro Stabilizer/Conditioner cleans the engine during operation and prevents gum-like varnish deposits from forming in the engine during periods of storage.

Do not use fuel additives other than those manufactured for fuel stabilization during storage such as Toro's Stabilizer/conditioner or a similar product. Toro's Stabilizer/conditioner is a petroleum distillate based conditioner/stabilizer. Toro does not recommend stabilizers with an alcohol base such as ethanol, methanol or isopropyl. Additives should not be used to try to enhance the power or performance of the machine.

2. Connect spark plug wire (if disconnected) (Fig. 4).

Lawn Preparation And Mowing

1. Review SAFETY INSTRUCTIONS and read this manual carefully before operating mower.
2. Clear area of sticks, stones, wire, branches and other debris which could be picked up or hit by cutting blade and become thrown objects.
3. Keep everyone, especially children and pets, away from area of operation.
4. Avoid striking trees, walls, curbs or other solid objects. Never deliberately mow over any object.
5. If an object is struck, or mower starts to vibrate, immediately stop engine, disconnect spark plug wire and examine mower for damage.
6. Replace blade when necessary with an original Toro replacement blade.

Operation

Starting Engine

Note: Follow steps in BEFORE STARTING section.

1. Move throttle lever to (FAST) position (Fig. 10).
2. Push primer three (3) times (Fig. 11). Wait about two (2) seconds between each push.

   Note: Do not use primer to restart a warm engine after a short shutdown.

3. Hold blade control bail against upper handle (Fig. 12).
4. Pull starter handle lightly until resistance is felt, then pull sharply (Fig. 12). Let rope return to handle slowly.

   Note: If engine fails to start after three (3) pulls, repeat steps 2–4.

Stopping Engine

1. Move throttle lever to (SLOW) position (Fig. 10).

2. Release blade control bail (Fig. 13). Both the engine and blade will stop. See your dealer immediately if they do not.

To Restart Engine

1. Repeat STARTING ENGINE procedure with throttle lever in (FAST) position.

2. If engine fails to start after three (3) pulls, repeat steps 2–4 in STARTING ENGINE procedure.

   Note: Do not use primer to restart a warm engine after a short shutdown.

Self–propelled Drive

(self-propelled models only)

1. To operate self-propelled drive squeeze self-propelled bail against handle and hold (Fig. 14).

   Note: Maximum self-propelled ground speed is fixed. To reduce ground speed, increase space between bail and handle.

2. To disengage self-propelled drive, release self-propelled bail (Fig. 15).

   Note: Mower is equipped with free-wheeling clutches which make it easier to pull the mower rearward. To disengage clutches, mower may need to be pushed forward one inch after self-propelled bail has been released.

Adjusting Cutting Height

Each wheel is adjusted individually with a wheel height adjustment lever. Cutting heights are 1”, 1-1/2”, 2”, 2-1/2”, 3” and 3-1/2 inches (25, 38, 51, 64, 76 and 89 mm).

⚠ DANGER

POTENTIAL HAZARD
- **Adjusting height-of-cut levers could bring hands into contact with moving blade.**

WHAT CAN HAPPEN
- **Contact with rotating blade can cause serious injury.**

HOW TO AVOID THE HAZARD
- **Stop engine and wait for all movement to stop before adjusting cutting height.**
- **Do not put fingers under housing when adjusting height-of-cut.**

1. To change cutting height pull adjusting lever toward wheel and move to the desired position (Fig. 16).

2. Release height adjust lever and seat securely in notch.

   Note: Set all four (4) wheels at the same height.

Maintenance

Continued safe and dependable operation requires routine maintenance.

Recommended Maintenance Schedule

Service Item	Service Operation	5 Hours	25 Hours	50 Hours	100 Hours
Fasteners	Check blade and engine mounting fasteners frequently. Keep all nuts, bolts and screws tight to ensure safe operation.	X			
Air Filter	Remove and clean each mowing season or every 25 hours. **Clean more frequently if operating conditions are dusty.**		X		
Spark Plug	Clean, inspect and gap. Replace if necessary.		X		
Housing	Clean built-up grass clippings and dirt.		X		
Self-propelled Drive	Clean grass clippings and debris under belt cover and drive belt.		X		
Blade	Sharpen or replace; maintain more frequently if edge is dulled quickly in rough or sandy conditions.			X	
Blade Brake	Check stopping time every 50 hours or at start of each mowing season. Blade must stop within 3 seconds of releasing bail; if not see your Authorized Toro Service Dealer for repair.			X	
Lubrication	Grease rear height adjustor brackets (self-propelled models).			X	
Exhaust Ports	Clean every 50 hours or at least once each mowing season.			X	
Fuel System	Check for leakage and/or deterioration of fuel hose. Replace if necessary.			X	
Cooling System	Clean grass clippings, debris or dirt that clog engine air cooling fins and starter. Clean more frequently under dirty or high chaff conditions.				X

⚠ CAUTION

POTENTIAL HAZARD

- **If you leave the wire on the spark plug, someone could start the engine.**

WHAT CAN HAPPEN

- **Accidental starting of the engine could seriously injure you or other bystanders.**

HOW TO AVOID THE HAZARD

- **Pull the wire off the spark plug before you do any maintenance. Also push the wire aside so it does not accidentally contact the spark plug.**

Air Filter

Clean air filter once every season or every 25 hours; clean more frequently under dusty conditions.

Note: Do not operate engine without air filter element; extreme engine wear or damage will occur.

1. To remove air filter, snap cover latch open, swing to side and unhook (Fig. 17).

2. Remove cover and air filter.

3. Wash air filter in laundry detergent or kerosene (Fig. 18).

4. Squeeze filter to remove excess liquid and blot dry with a paper towel or rag.

5. Apply one tablespoon of SAE 30W oil to the air filter (Fig. 19).

6. Squeeze until oil is distributed evenly throughout filter. Blot lightly with paper towel to remove excess oil.

7. Replace filter with cleanest side facing carburetor.

Note: Be sure filter is fully seated in air box and is smooth and not folder over, allowing direct passage of air and dirt.

Drain Gasoline

1. Stop engine and wait for engine to cool. Pull wire off spark plug.

Note: Drain gasoline from a cold engine only.

2. Remove cap from fuel tank (Fig. 9) and use a pump-type siphon to drain fuel into clean gas can.

Note: This is the only procedure recommended for draining fuel.

3. Reconnect spark plug wire.

4. Run engine until it dies. Try starting engine once more to make sure gas is out of carburetor.

Spark Plug

A spark plug that is dirty, pitted, carbon-covered or has worn electrodes may cause hard starting and poor operation.

Clean or replace spark plug once a season or every 25 hours, whichever occurs first. Use a Champion RJ12C spark plug or equivalent.

1. Pull wire off spark plug (Fig. 4). Remove spark plug and clean with a wire brush, removing carbon build–up. DO NOT SAND-BLAST. Check condition of plug for cracks and damaged or worn electrodes. Replace if necessary.

2. Set spark plug gap at .035 inch (.85 mm) (Fig. 20).

3. Install spark plug by hand, then torque to 180 in.–lbs. (15 ft.–lbs.) (20 N·m) (Fig. 4).

4. Reconnect spark plug wire when maintenance is completed.

Clean Mower Housing

A clean mower housing provides the best cutting performance. Check for grass build-up and clean after each use.

1. Disconnect spark plug wire (Fig. 4).

2. Run engine dry or remove gas with hand pump.

⚠ WARNING

POTENTIAL HAZARD
- **Gasoline is extremely flammable, highly explosive and under certain conditions can cause personal injury or property damage.**

WHAT CAN HAPPEN
- **Tipping mower may cause fuel leakage from carburetor or fuel tank.**

HOW TO AVOID THE HAZARD
- **Avoid fuel spills by running engine dry or remove gas with hand pump, never siphon.**

3. Tip mower onto right side (Fig. 21).

4. Scrape built-up grass clippings and dirt from mower housing with a hardwood scraper.

5. Tip mower upright.

6. Reconnect spark plug wire when maintenance is completed.

7. Fill fuel tank with clean, fresh gasoline/oil mix.

Blade

A straight, sharp blade provides maximum cutting performance. Regularly inspect and sharpen blade.

⚠ WARNING

POTENTIAL HAZARD
- **Blade is sharp.**

WHAT CAN HAPPEN
- **Contact with sharp blade can cause serious personal injury.**

HOW TO AVOID THE HAZARD
- **Wear gloves or wrap sharp edges of the blade with a rag.**

Blade Straightness

1. Disconnect spark plug wire (Fig. 4).

2. Measure the distance from the bottom edge of the mower housing to the blade tip (Fig. 22). Rotate the blade 180° and measure to other blade tip.

   Note: If measurements are not within 1/8 inch (3.2 mm), blade should be replaced. If, after blade replacement, the measurements are still not within 1/8 inch (3.2 mm), the crankshaft should be checked for straightness by your Authorized Toro Service Dealer.

Blade Removal

1. Remove the blade nut (Fig. 23).

2. Remove the blade from the blade driver (Fig. 23).

3. Examine blade cutting edges for nicks, cutting angle and sharpness. Sharpen or replace if necessary.

4. Examine blade driver for bent or sheared drive lugs. Replace if necessary.

Blade Sharpening

⚠ WARNING

POTENTIAL HAZARD
- **When sharpening blade, pieces of blade could be accidentally thrown.**

WHAT CAN HAPPEN
- **Thrown objects can cause serious eye injury.**

HOW TO AVOID THE HAZARD
- **Wear proper eye protection when sharpening blade.**

1. Sharpen only the leading edge of blade with a file or grinder. Do not sharpen beyond the recommended area.

   Note: Blade should not be ground more than 5 inches (127 mm) from outside ends and no less than 2 inches (51 mm) from trailing edge (Fig. 24).

Blade Balancing

1. Check the balance of blade by placing the center hole of blade over a nail or screwdriver shank clamped horizontally in a vise (Fig. 25).
2. If either end of blade rotates downward, grind or file that end (not the cutting edge). Blade is properly balanced when neither end drops.

Blade Installation

1. Install the blade driver onto the crankshaft (if removed) (Fig. 23).
2. Locate the blade over the lugs of the blade driver with the curved ends toward the mower housing. Secure blade with blade nut.
3. Torque blade nut to 47 ft.–lbs. (63 N·m) (Fig. 26).

   Note: Blade nut must be replaced after installing and removing four (4) times. Locking feature will decrease and nut could loosen if not replaced.
4. Reconnect spark plug wire when maintenance is completed (Fig. 4).

Lubrication

(self–propelled models only)

1. Wipe grease fittings on rear height-of-cut adjustors (Fig. 27) with clean rag.
2. Install grease gun onto fitting and gently apply one or two pumps of #2 multi-purpose lithium grease. Excess grease may damage seals and prevent proper wheel clutch operation.

Self-propelled Cable

(self–propelled models only)

Whenever the handle height is changed, a new self–propelled cable is installed or traction drive belt slips, adjustment is required.

Self–propelled cable is adjusted on the handle by moving cable jacket held by cable support.

1. Loosen nut on cable support (Fig. 28).
2. Hold self–propel control 1 to $1\frac{1}{2}$ in. (25 to 38 mm) from handle (Fig. 28).
3. Pull cable jacket down (away from control).
4. Tighten nut on cable support.
5. Release bail and check to see that cable is loose.

   Note: Cable must be loose with bail in released position or mower may creep when bail is disengaged.

Self-propelled Drive Cleaning

(self–propelled models only)

Under certain conditions clippings can collect under belt drive cover and in pulley groove. This could cause belt slippage, loss of self–propelled drive or failure to disengage self-propelled drive.

Clean grass clippings and debris from under belt cover every 25 hours of operation.

1. Remove screw and slide belt cover to rear, unhooking tab on front of cover from deck opening. Tilt cover up to the side and remove debris (Fig. 29) from under cover and pulley groove.
2. Reverse procedure to install belt cover.

Exhaust Ports

Carbon deposit build-up causes excessive wear and loss of power. Check and clean if necessary.

1. Remove spark plug. See SPARK PLUG section.
2. Drain gasoline using a hand pump.
3. Tip mower on its right side (Fig. 21).

⚠ WARNING

POTENTIAL HAZARD

- **Gasoline is extremely flammable, highly explosive and under certain conditions can cause personal injury or property damage.**

WHAT CAN HAPPEN

- **Tipping mower may cause fuel leakage from carburetor or fuel tank.**

HOW TO AVOID THE HAZARD

- **Avoid fuel spills by running engine dry or remove gas with hand pump, never siphon.**

4. Remove the blade nut and blade (Fig. 23). See BLADE REMOVAL section.
5. Remove blade driver by tapping with plastic or fiber hammer in the direction of rotation (Fig. 30). This will loosen the blade driver from taper on crankshaft.
6. Remove capscrews attaching muffler cover and baffle plate to engine mounting plate (Fig. 31).
7. Clean carbon deposits from muffler cover and baffle plate with wire brush making sure exhaust vents are clear. Wipe muffler clean with paper towel or rag.
8. Rotate crankshaft slowly until piston covers exhaust ports (Fig. 32).
9. Using a 3/8 inch wooden dowel loosen carbon deposits by inserting dowel into ports.

   Note: Do not use metal tools; they could scratch piston.

10. Set mower upright.
11. Hold blade control bail against upper handle (Fig. 33) and pull starter rope several times to blow out loose carbon.
12. Install baffle and muffler cover to engine mounting plate (Fig. 31). Torque muffler capscrews to 155 in.–lbs. (13 ft.–lbs.) (18 N·m).
13. Attach blade driver and blade with blade nut. See BLADE INSTALLATION.
14. Torque blade nut to 47 ft.–lbs. (63 N·m).
15. Tip mower upright.
16. Reconnect spark plug wire when maintenance is completed.
17. Fill fuel tank with clean, fresh gasoline/oil mix.

Troubleshooting

Your mower was designed and built for trouble-free operation. Check the following components and items carefully. If a problem continues, see your Authorized Toro Service Dealer.

PROBLEM	CORRECTIVE ACTION
Engine will not start	1. Fill fuel tank with fresh gasoline/oil mix 2. Move throttle lever to the FAST position 3. Press primer three (3) times 4. Spark plug • Connect spark plug wire • Clean spark plug, check spark plug gap, replace if damaged
Engine starts hard or loses power	1. Drain and refill fuel tank with fresh gasoline/oil mix 2. Clean or replace air filter element 3. Clean mower discharge chute 4. Clean underside of mower deck 5. Clean spark plug, check spark plug gap, replace if damaged 6. Check engine oil
Engine runs rough	1. Connect spark plug wire 2. Clean spark plug, check spark plug gap, replace if damaged 3. Move throttle lever from SLOW to FAST position 4. Replace air filter element
Mower or engine vibrates excessively	1. Balance blade 2. Tighten blade nut 3. Clean mower discharge chute 4. Clean underside of mower deck 5. Tighten engine mounting bolts
Uneven cutting pattern	1. Place all four (4) wheels at same height 2. Sharpen and balance blade 3. Change mowing pattern 4. Clean underside of mower deck

PROBLEM	CORRECTIVE ACTION
Discharge chute plugs	1. Move throttle lever from SLOW to FAST position 2. Raise cutting height 3. Allow grass to dry before mowing 4. Clean underside of mower deck
Mower will not self-propel	1. Adjust self-propelled cable 2. Clean debris under belt cover

Accessories

For special conditions, the following accessories may be purchased at your local Authorized Toro Service Dealer.

- Rear Bag Kit, Model No. 59187

Storage

To prepare lawn mower for off-season storage perform recommended maintenance procedures. See MAINTENANCE section.

Store mower in a cool, dry place.

Fuel

⚠ WARNING

POTENTIAL HAZARD
- **In certain conditions gasoline is extremely flammable and highly explosive.**

WHAT CAN HAPPEN
- **A fire or explosion from gasoline can burn you, others, and cause property damage.**

HOW TO AVOID THE HAZARD
- **Do not store gasoline (fuel) over long periods of time.**
- **To prevent possible explosion of vaporized fuel, do not store mower with fuel in the tank or carburetor in an enclosure with an open flame. (Example: furnace or water heater pilot light.)**
- **Allow the engine to cool before storing in any enclosure.**

For long term storage, either drain gasoline from fuel tank or add a fuel additive to the gasoline. To drain gasoline, refer to Drain Gasoline, page 12. After fuel is drained, start engine and let it idle until all fuel is consumed and engine stops. Repeat the starting procedure two more times to ensure all gas is removed from the engine. If gasoline is not drained and a fuel stabilizer is not added, gum–like varnish deposits will form and cause poor engine operation, even starting problems.

Note: If engine is operating on oxygenated or reformulated gasoline (gasoline blended with an alcohol or an ether), remove all fuel from tank and run engine until it stops from lack of fuel before storing.

Engine

1. Remove spark plug. Using an oil can, squirt about one tablespoon of oil through spark plug hole (Fig. 34).

2. Slowly rotate engine several times, using starter handle, to distribute oil (Fig. 33).

3. Replace spark plug but DO NOT connect spark plug wire.

Folding Handle

1. Squeeze bottom handle section together and slide past stops of handle brackets (Fig. 35).

2. Rotate handle toward front of mower (Fig. 36).

Note: Fold handle only as illustrated. If handle is folded in opposite direction damage will occur to control cables.

3. Loosen knobs securing top handle section to bottom section and fold top handle section back towards rear of mower into storage position.

Removing From Storage

1. Unfold handle. See handle assembly instructions in ASSEMBLY section
2. Check and tighten all fasteners.
3. Remove spark plug (Fig. 4) and spin engine rapidly using starter to blow excess oil from the cylinder. Clean spark plug or replace if cracked, broken or electrodes are worn.
4. Install spark plug and torque to 180 in.-lbs. (15 ft.-lbs.) (20 N·m).
5. Perform recommended maintenance procedures. See MAINTENANCE section.
6. Fill fuel tank (Fig. 9) with fresh, clean gasoline/oil mix.
7. Reconnect spark plug wire (Fig. 4).


TORO®