FORM NO. 3319–682

TORO®

MODEL NO. 04351–80001 & UP

OPERATOR'S MANUAL

GREENSMASTER® 3050
TRACTION UNIT

TORO
THIS UNIT CONFORMS TO ANSI B71.4–1990

The GREENSMASTER 3050 conforms to the American National Standards Institute's safety standards for riding mowers when 40 lbs. of ballast is added to rear wheel; thus Toro proudly displays the ANSI safety seal.

To assure maximum safety, optimum performance, and to gain knowledge of the product, it is essential that you or any other operator of the machine read and understand the contents of this manual before the engine is ever started. Pay particular attention to the SAFETY INSTRUCTIONS highlighted by this symbol –

The safety alert symbol means CAUTION, WARNING or DANGER – personal safety instruction. Failure to comply with the instruction may result in personal injury.

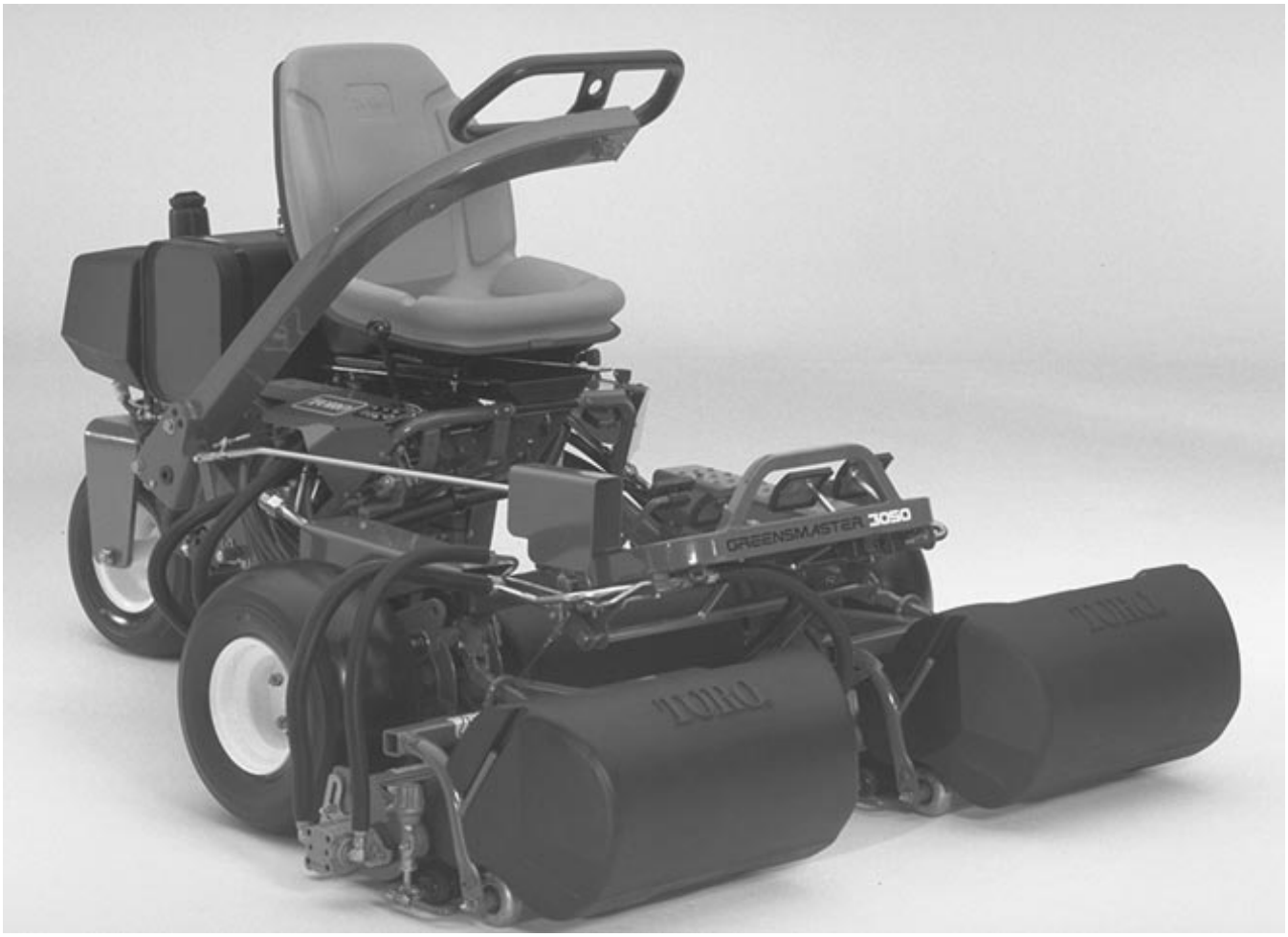

©The Toro Company — 1997

FOREWORD

The GREENSMASTER 3050 was developed to provide an efficient, trouble free and time−saving method of mowing high quality turf on the finest greens. The latest concepts in engineering, design and safety have been incorporated into this machine along with the highest quality parts and workmanship. Excellent service will be derived if proper operation and maintenance practices are followed.

We know, since you have purchased the industry leader in mowing excellence, that future performance and dependability are of prime importance. TORO also is concerned about future use of the machine and of safety to the user. Therefore, this manual should be read by you and those involved with the GREENSMASTER 3050 to make sure that safety, proper set−up, operation and maintenance procedures are followed at all times. The major sections of the manual are:

1. Safety Instructions
2. Set−up Instructions
3. Before Operating
4. Operation
5. Maintenance

Safety, mechanical and some general information in this manual is emphasized. DANGER, WARNING and CAUTION identify safety messages. Whenever the triangular safety symbol appears, it is followed by a safety message that must be read and understood. For more details concerning safety, read the safety instructions on pages 4 and 5. IMPORTANT identifies special mechanical information and NOTE identifies general information worthy of special attention.

⚠ WARNING: ⚠

The engine exhaust from this product contains chemicals known to the State of California to cause cancer, birth defects, or other reproductive harm.

OPTIONAL SPARK ARRESTER

In some areas there are local, state or federal regulations requiring that a spark arrester be used on the engine of this mower. If a spark arrester is required, order the following part from your local TORO Distributor:

(1) 83−2240 Spark Arrester

These parts are approved by the United States Department of Agriculture and the United States Forest Service.

When mower is used or operated on any California forest, brush or grass covered land, a working order spark arrester must be attached to muffler. If not, the operator is violating state law, Section 442 Public Resources Code.

If help concerning set−up, operation, maintenance or safety is ever needed, contact the local Authorized TORO Distributor In addition to genuine TORO replacement parts, the distributor also has optional equipment for the complete line of TORO turf care equipment. Keep your Toro all TORO. Buy genuine TORO parts and accessories.

TABLE OF CONTENTS

	Page
SAFETY INSTRUCTIONS	4–5
SAFETY AND INSTRUCTION DECALS	6
LOOSE PARTS	7
SPECIFICATIONS	8
SET UP INSTRUCTIONS	9–13
Remove, Activate and Charge Battery	9
Install Rear Wheel Assembly	9
Mount Seat	9
Secure Steering Arm	10
Mount Cover	10
Install Battery	10
Install Cutting Units	11
Rear Ballast	13
BEFORE OPERATING	14–16
Check Engine Oil	14
Filling Gas Tank	14
Check Hydraulic System	15
Tire Pressure	16
Check Torque of Wheel Nuts	16
CONTROLS	17–18
OPERATING INSTRUCTIONS	19–20
Break–In Period	19
Starting Instructions	19
Check Interlock System Operation	19
Preparing Machine For Mowing	20
Training Period	20
Before Mowing	21
Mowing Procedures	21
Transport Operation	22
Inspection and Clean–up After Mowing	22
SERVICE INTERVAL CHART	23
DAILY MAINTENANCE CHECKLIST	24

	Page
LUBRICATION	25–26
MAINTENANCE	27–35
Changing Engine Oil and Filter	27
Servicing Air Cleaner	27
Adjusting Throttle Control	28
Adjusting Choke Control	28
Adjusting Carburetor and Speed Control	28
Replacing Spark Plugs	29
Fuel Filter Replacement	29
Changing Hydraulic Oil and Filter	29
Checking Hydraulic Lines and Hoses	30
Brake Adjustment	30
Rear Camshaft Adjustment	31
Adjusting Lift and Mow Pedal Height	31
Leveling Lift and Mow Pedals	32
Adjusting Traction Pedal	32
Adjusting Cutting Unit Lift/Drop	32
Adjusting Lift Cylinders	33
Seat Switch Maintenance	33
Traction Switch Maintenance	33
Mow/Lift Switch Maintenance	34
Adjusting Traction Return Linkage	34
Servicing Steering Assembly	34
Battery Care	35
MAINTENANCE SCHEDULE	35
ELECTRICAL SCHEMATIC	36
HYDRAULIC SCHEMATIC	37
TROUBLE SHOOTING	38–42
STORAGE	43
IDENTIFICATION AND ORDERING	43
WARRANTY	Back Cover

SAFETY INSTRUCTIONS

The safety alert symbol means CAUTION, WARNING or DANGER — "personal safety instruction". Read and understand the instruction because it has to do with safety. Failure to comply with the instruction may result in personal injury.

The Greensmaster 3050 was tested and certified by TORO for compliance with the B71.4 – 1990 specifications of the American National Standard Institute's safety standards for riding mowers when 40 lbs. of ballast is added to rear wheel. Hazard control and accident prevention are dependent upon the awareness, concern, and proper training of the personnel involved in the operation, transport, maintenance, and storage of the machine. Improper use or maintenance of the machine can result in injury or death. To reduce the potential for injury or death, comply with the following safety instructions.

BEFORE OPERATING

1. Read and understand the contents of this Operator's Manual before starting and operating the machine. Become familiar with all controls and know how to stop quickly. A replacement manual is available by sending complete Model and Serial Number to:

The Toro Company
8111 Lyndale Avenue South
Minneapolis, Minnesota 55420–1196

2. Never allow children to operate the machine or adults to operate it without proper instructions.

3. Become familiar with the controls and know how to stop the engine quickly.

4. Keep all shields, safety devices and decals in place. If a shield, safety device or decal is defective or damaged, repair or replace it before operating the machine.

5. Always wear substantial shoes. Do not operate machine while wearing sandals, tennis shoes or sneakers. Do not wear loose fitting clothing because it could get caught in moving parts and possibly cause personal injury.

6. Wearing safety glasses, safety shoes, long pants and a helmet is advisable and required by some local ordinances and insurance regulations.

7. Make sure work area is clear of objects which might be picked up and thrown by the reels.

8. Do not carry passengers on the machine, and keep everyone, especially children and pets, away from the areas of operation.

9. Since gasoline is highly flammable, handle it carefully.

A. Use an approved gasoline container.

B. Do not remove cap from fuel tank when engine is hot or running. Remove cap slowly.

C. Do not smoke while handling gasoline.

D. Fill fuel tank outdoors and only to bottom of filler neck. DO NOT OVERFILL.

E. Wipe up any spilled gasoline.

WHILE OPERATING

10. Do not run the engine in a confined area without adequate ventilation. Exhaust fumes are hazardous and could be deadly.

11. Sit on the seat when starting and operating the machine.

12. Check the safety interlock switches daily for proper operation; refer to page 19. If a switch should fail, replace the switch before operating the machine. **(After every two years, replace all three interlock switches in the safety system, regardless if they are working properly or not.)**

13. To start the engine:

A. Sit on the seat, depress lift pedal and release it to ensure cutting units are disengaged.

B. Verify that traction system is in neutral.

C. Verify that parking brake is set.

D. Proceed to start engine.

14. Using the machine demands attention, and to prevent loss of control:

A. Mow only in daylight or when there is good artificial light.

B. Watch for holes or other hidden hazards.

C. Do not drive close to sand traps, ditches, creeks or other hazards.

D. Reduce speed when making sharp turns. Avoid sudden stops and starts.

E. Before backing up, look to the rear to be sure no one is behind the machine.

F. Watch out for traffic when near or crossing roads. Always yield the right–of–way.

G. Apply the service brakes when going downhill to keep forward speed slow and to maintain control of the machine.

15. Keep hands, feet and clothing away from moving parts and the reel discharge area. The grass baskets must be in place during operation of the reels or thatchers for maximum safety. Shut the engine off before emptying the baskets.

16. This product may exceed noise levels of 85 dB(A) at the operator position. Ear protectors are recommended, for prolonged exposure, to reduce the potential of permanent hearing damage.

17. Raise the cutting units when driving from one work area to another.

SAFETY INSTRUCTIONS

18. Do not touch engine, muffler or exhaust pipe while engine is running or soon after it is stopped because these areas could be hot enough to cause burns.

19. Stay clear of the rotating screen at side of the engine to prevent direct contact with body or clothing.

20. If a cutting unit strikes a solid object or vibrates abnormally, stop immediately, turn engine off, wait for all motion to stop and inspect for damage. A damaged reel or bedknife must be repaired or replaced before operation is continued.

21. Before getting off the seat:

A. Move shift selector to N neutral.

B. Depress the lift pedal to raise the cutting units, wait for the reels to stop spinning and release lift pedal.

C. Set the parking brake.

D. Stop the engine and remove key from ignition switch.

22. Traverse slopes carefully. Do not start or stop suddenly when traveling uphill or downhill.

23. Operator must be skilled and trained in how to drive on hillsides. Failure to use caution on slopes or hills may cause loss of control and vehicle to tip or roll possibly resulting in personal injury or death.

24. If engine stalls or loses headway and cannot make it to the top of a slope, do not turn machine around. Always back slowly straight down the slope.

25. DON'T TAKE AN INJURY RISK! When a person or pet appears unexpectedly in or near the mowing area, **STOP MOWING.** Careless operation, combined with terrain angles, ricochets, or improperly positioned guards can lead to thrown object injuries. Do not resume mowing until area is cleared.

26. Whenever machine is left unattended, make sure cutting units are fully raised and reels are not spinning, key is removed from ignition switch and parking brake is set.

MAINTENANCE

27. Before servicing or making adjustments to the machine, stop the engine, remove key from switch and pull wires off spark plugs to prevent accidental starting of the engine.

28. Be sure entire machine is in good operating condition. Keep all nuts, bolts, screws and hydraulic fittings tight.

29. Make sure all hydraulic line connectors are tight,and all hydraulic hoses and lines are in good condition before applying pressure to the system.

30. Keep body and hands away from pin hole leaks or nozzles that eject hydraulic fluid under high pressure. Use paper or cardboard, not hands, to search for leaks. Hydraulic fluid escaping under pressure can have sufficient force to penetrate skin and do serious damage. If fluid is ejected into the skin it must be surgically removed within a few hours by a doctor familiar with this form of injury or gangrene may result.

31. Before disconnecting or performing any work on the hydraulic system, all pressure in system must be relieved by stopping engine and lowering cutting units and attachments to the ground.

32. To reduce potential fire hazard, keep the engine area free of excessive grease, grass, leaves and accumulation of dirt.

33. Check all fuel lines for tightness and wear on a regular basis, and tighten or repair as needed.

34. If the engine must be running to perform a maintenance adjustment, keep hands, feet, clothing and any other parts of the body away from the cutting units, attachments and any moving parts, especially the screen at side of the engine. Keep everyone away.

35. Do not overspeed the engine by changing governor settings. To assure safety and accuracy, have an Authorized Toro Distributor check maximum engine speed with a tachometer. Maximum governed engine speed should be 2850 RPM.

36. Engine must be shut off before checking oil or adding oil to the crankcase.

37. If major repairs are ever needed or if assistance is desired, contact an Authorized Toro Distributor.

38. At the time of manufacture, the GREENSMASTER 3050 conformed to safety standards in effect for riding mowers. To make sure of optimum performance and continued safety certification of the machine, use genuine TORO replacement parts and accessories. Replacement parts and accessories made by other manufacturers could be dangerous, and such use could void the product warranty of The Toro Company.

SAFETY AND INSTRUCTION DECALS

The following safety and instruction decals are installed on the traction unit. If any become damaged or illegible, replace them. Decal part numbers are listed below and in your Parts Catalog. Order replacements from your Authorized Toro Distributor.

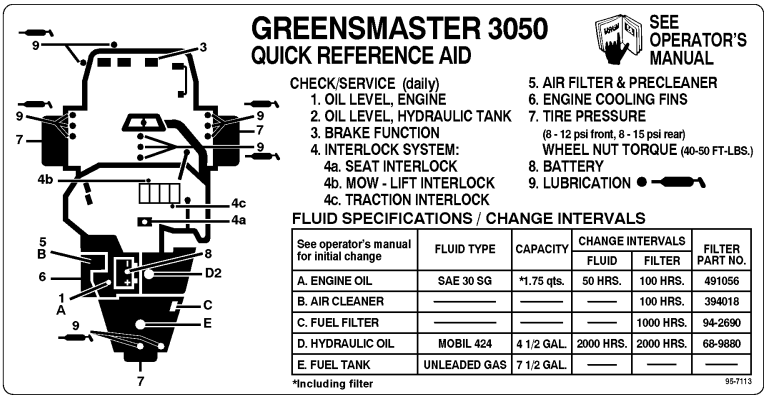

ON BACK OF SEAT
(Part No. 95−7113)

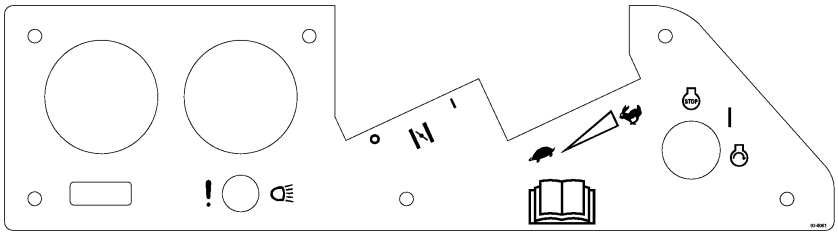

ON CONTROL PANEL
(Part No. 93−8061)

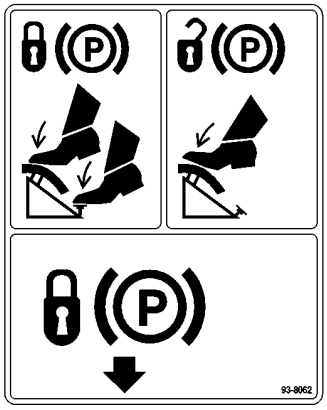

ABOVE PARKING BRAKE LATCH PEDAL
(Part No. 93−8062)

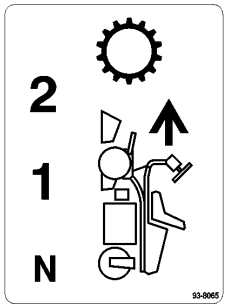

ON RIGHT HAND SHIELD
(Part No. 93−8065)

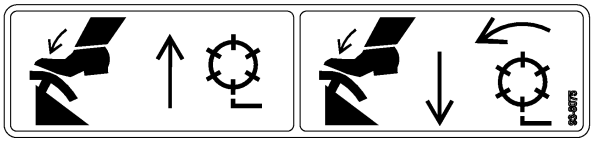

BELOW MOW AND LIFT PEDALS
(Part No. 93−8075)

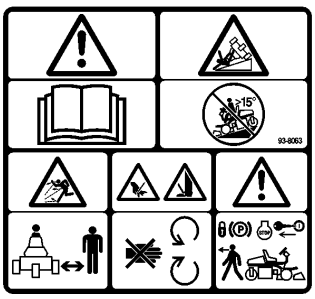

ON STEERING COLUMN
(Part No. 93−8063)

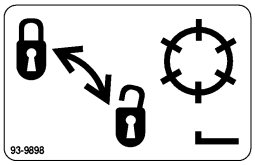

ON MOW LOCKOUT
(Part No. 93−9898)

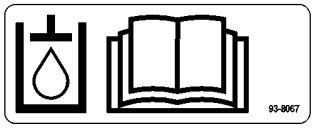

ON BACK OF SEAT
(Part No. 93−8067)



ON ENGINE
(Part No. 93−8069)

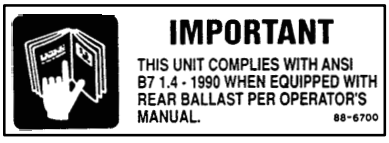

ON FRAME TUBE
(Part No. 88−6700)

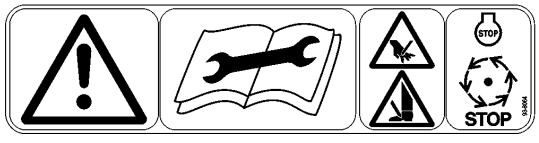

ON CUTTING UNIT PULL FRAMES
(Part No. 93−8064)

LOOSE PARTS

Description	Qty.	Use
Seat Hex Nut 5/16 – 18 Seat Cover	1 4 1	Mount seat slides and seat cover to seat base
Wheel Assembly Rear Spindle Spacer	1 2	Mount to castor fork
Capscrew 1/2–13 x 3/4" lg. Washer .53 I.D.	1 1	Secure steering arm
Cover Socket Head Screw 1/4–20 x 3/4" lg. Locknut 1/4–20 Washer .281 I.D. Self tapping Screw	1 1 1 1 2	Mount Cover
Capscrew 1/4 – 20 x 5/8 in. lg. Nut 1/4 – 20	2 2	Secure battery cables to battery
Gauge Bar Machine Screw #10 – 32 x 7/8" lg. Jam Nut #10	1 1 1	Use to set height–of–cut
Grass Basket	3	Mounts to pull frame
Ignition Keys	2	
Operator's Manual (Traction Unit)	2	Read before operating machine
Engine Manual	1	
Parts Catalog	1	
Registration Card (Traction Unit) Registration Card (Cutting Unit)	1 1	Fill out and return to Toro

Note: Mounting fasteners for GREENSMASTER 3050 cutting unit are included with the cutting units.

SPECIFICATIONS

Configuration: Conforms to ANSI B71 .4 – 1990 specifications. Tricycle vehicle with front two wheels providing drive and rear wheel providing steering. Operator sits in center over No. 1 cutting unit with No. 2 & 3 cutting units in front of vehicle.

Power: 4–cycle gasoline engine, electric start, with output of 16 H.P. @ 3600 RPM. Maximum no load governed engine speed is 2850 RPM.

Traction: All hydraulic drive, consisting of multiple stack pump, valve and two orbital gear motors to drive front wheels.

Cutting Units: All hydraulic drive consisting of three gear pump sections, three valve sections and three gear motors which drive the reels.

Hydraulic Valve: Five spool sections, first 3 spool sections control lowering, mowing and lift functions of the cutting units. Spools moved out, provide lowering and "MOW" operation, moved in provides "Lift" operation.
Number 4 spool section controls traction functions, N (Neutral), 1 (Mow), and 2 (transport). Spool is controlled by direct linkage from hand shift lever with a positive detent feel in N, 1, and 2.
Number 5 spool section controls forward and reverse traction being infinitely variable in both forward and reverse from zero (spring loaded centering) to the maximum speeds.

Tire Pressure :
8 –12 PSI – front
8 –15 PSI – rear

Brakes: 6 in. drum–type mechanical with rack and pawl lock for parking.

Hydraulic Filter: 10 micron, cartridge type, 905 sq. in filter area for extra long life.

Hydraulic Oil Reservoir: 4.5 gal. capacity with internal baffle. Type fluid: Mobil 424. Red dye is added at factory.

Gas Tank: 7.5 gal capacity.

Fuel Filter: Inline type.

Fuel Pump: Vacuum pulse type .

Seat Adjustment: 7 inches (forward and rearward).

Wheel Bearings:
Drive Wheels: Needle provided in wheel motors.
Rear Caster Wheel: Timken tapered roller.

Electrical & Instrumentation: Engine contains 16 amp alternator, circuit is fused by a fusible link. Instruments include voltmeter and hour meter. Accessory terminal is available if attachment of headlight is desired (15 amp max.).

Battery: 12 Volt, Lead Acid, 32 Amp. Hour . Size: Length – 7.25 in. Width – 4.88 in. Height – 6.00 in.

General Specifications:

Width of Cut:	59 inches
Wheel Tread:	49–1/2 inches
Wheel Base:	46–7/8 inches
Overall Length:	90 inches
Overall Width:	69–3/4 inches
Overall Height:	48–1/2 inches
Net Weight (Wet):	930 lb.
Weight w/ Reels:	1173 lb.

Speeds:
1st – 3.8 mph Approx.
2nd– 7.4 mph Approx.
Rev. – 1.9 mph Approx.

Reels: 1975 RPM Approx.

Clip:
0.18 in. Approx. (11 Blade Cutting Unit)
0.25 in. Approx. (8 Blade Cutting Unit)

Accessories:

8 Blade, 4 Bolt Cutting Unit (HD)	Model No. 04405
8 Blade, 4 Bolt Cutting Unit	Model No. 04408
11 Blade, 4 Bolt Cutting Unit	Model No. 04406
8 Blade, SPA Cutting Unit	Model No. 04468
11 Blade, SPA Cutting Unit	Model No. 04450
8 Blade, 4 Bolt Cutting Unit	Model No. 04480
11 Blade, 4 Bolt Cutting Unit	Model No. 04481
8 Blade, SPA Cutting Unit	Model No. 04482
11 Blade, SPA Cutting Unit	Model No. 04483
Groomer Kit	Model No. 04456
(Use with cutting unit models 04480, 04481, 04482 & 04483)	
Grooming Reel Kit	Model No. 04455
(Use with cutting unit models 04404, 04408, 04406, 04468 & 04450)	
Thatching Reels	Model No. 04493
Variable Traction Speed Kit	Model No. 04422
Individual Reel Shut Off Kit	Part No. 28–2150
Basket Reinforcement Kit	Part No. 26–0900
Backlapping Kit	Part No. 92–9656
High Altitude Jet	Part no. 805537
(Order from your local Briggs & Stratton Dealer)	

Specifications and design subject to change without notice.

SET UP INSTRUCTIONS

REMOVE, ACTIVATE AND CHARGE BATTERY

1. Remove wing nuts, washers, and battery clamp and lift out battery.

WARNING

Electrolyte gases are explosive and can cause serious injury to eyes, lungs and skin. Wear safety goggles and rubber gloves when working with electrolyte or battery. Charge the battery in a well ventilated place so gasses produced while charging can dissipate. Since the gases are explosive, keep open flames and electrical spark away from the battery; do not smoke. Nausea may result if the gases are inhaled. Unplug charger from electrical outlet before connecting to or disconnecting charger leads from battery posts.

2. Remove filler caps from battery and slowly fill each cell until electrolyte is up to fill line.

3. Replace filler caps and connect a battery charger to the battery posts. Charge the battery at a rate of 3 to 4 amperes for 4 to 8 hours.

4. When battery is charged, disconnect charger from electrical outlet and battery posts, and allow battery to sit for 5–10 minutes.

5. Remove filler caps. Slowly add electrolyte to each cell until level is up to fill line. Install filler caps.

IMPORTANT: Do not overfill battery. Electrolyte will overflow onto other parts of the machine and severe corrosion and deterioration will result.

INSTALL REAR WHEEL ASSEMBLY

(Fig. 1 & 2)

1. Remove bolt and locknut from the wheel mount holes in the rear castor fork.

2. Install the rear wheel in the castor fork. Insert the bolt into one of the mounting holes, install a spacer and slide the bolt through the wheel.

3. Install another spacer onto the bolt and route the bolt through the remaining castor fork mounting hole.

4. Position the bend of the bolt head under the bottom edge of the castor fork. Install and tighten the locknut to secure the wheel to the castor fork.

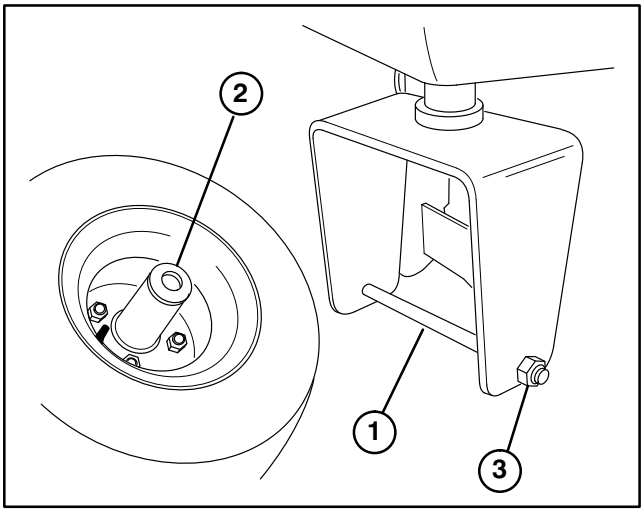

Figure 1

1. Bolt 2. Spacer 3. Locknut

5. Wipe grease fitting clean on wheel assembly. Pump grease into wheel hub until grease is seen exiting at both hub bearings, thus assuring wheel hub cavity is full. Wipe up excess grease.

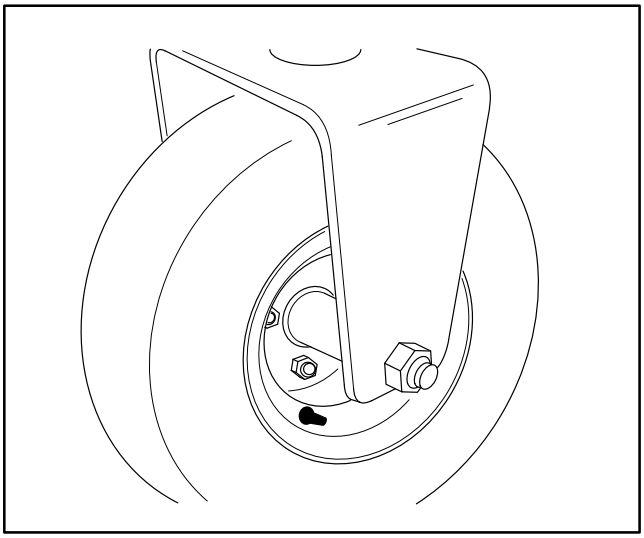

Figure 2

MOUNT SEAT (Fig. 3)

Note: Mount seat slides in front set of mounting holes to gain an additional 3" in forward adjustment, or rear mounting holes for an additional 3" in rearward adjustment.

1. Support seat base in up position with the seat support rod.

2. Remove locknuts securing seat slides to plywood shipping base. Discard locknuts.

3. Secure seat, seat panel and seat slides to seat support with 5/16–18 locknuts supplied in loose parts. Seat cover to be mounted on right side, positioned as shown in fig. 3.

SET UP INSTRUCTIONS

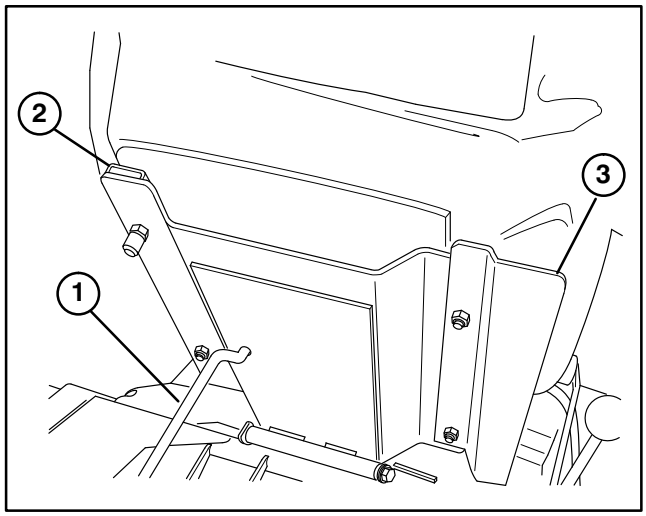

Figure 3

1. Seat support 2. Seat slide 3. Seat panel

SECURE STEERING ARM (Fig. 4)

1. Remove 1/2−13 x 3/4" capscrew and .53 I.D. washer mounted to outside steering arm frame bracket.

2. Pivot steering arm upward aligning mounting holes in arm with holes in frame bracket.

3. Select desired mounting hole for operator comfort and secure with a (2) 1/2−13 x 3/4" capscrews and .53 I.D. washers (one each in loose parts).

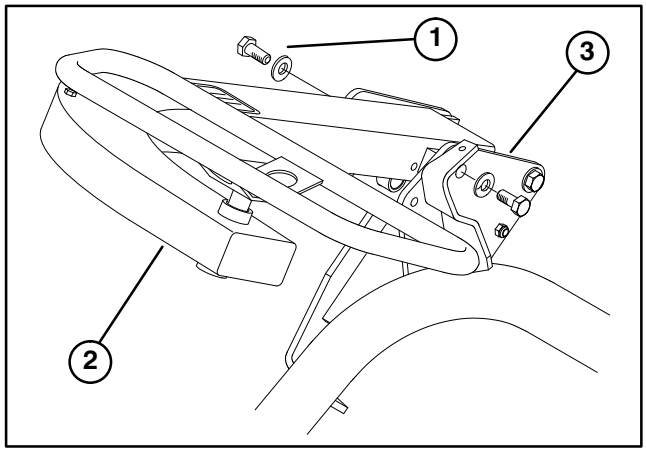

Figure 4

1. Capscrew and washer
2. Steering arm
3. Frame bracket

MOUNT COVER (Fig. 5)

1. Align cover mounting holes with holes in frame tube and mounting bracket.

2. Loosely secure rear of cover to top of mounting bracket with a 1/4−20 x 3/4" lg .socket head screw, .281 I.D. washer and a 1/4−20 Locknut.

3. Loosely secure front of cover to frame tube with (2) self tapping screws. Tighten all cover mounting fasteners.

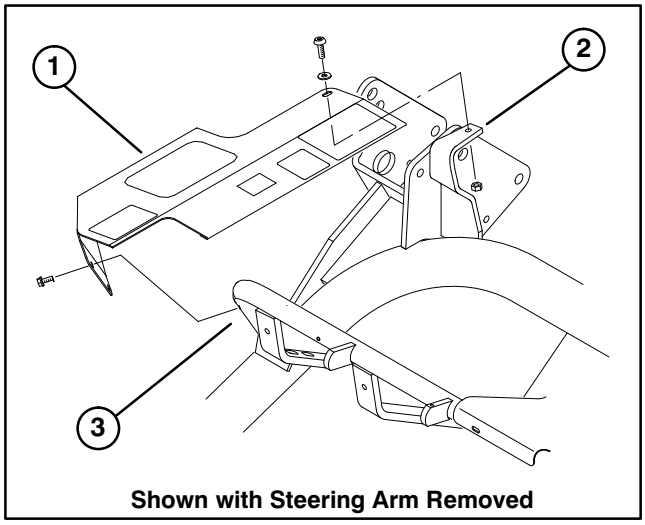

Shown with Steering Arm Removed

Figure 5

1. Cover
2. Mounting bracket
3. Frame tube

INSTALL BATTERY (Fig. 6)

1. Mount battery with battery terminals toward the hydraulic tank of machine.

2. Connect the positive battery cable (red) from the starter solenoid to the positive post (+) of the battery. Secure with wrench and coat terminal with petroleum jelly. Make sure the cable will clear seat, in rear most position, which could cause wear or damage to the cable.

WARNING

Connecting cables to the wrong post could result in personal injury and/or damage to the electrical system. Make sure battery or cables do not interfere or rub on any moving or hot parts.

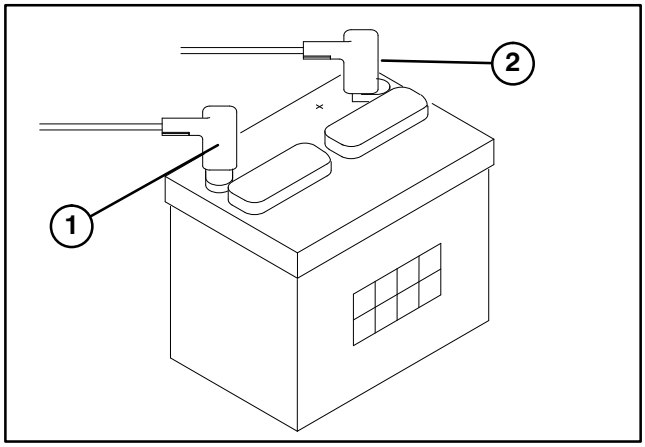

Figure 6

1. Negative (−) 2. Positive (+)

3. Connect the black ground cable, from the engine base, to the negative (−) post of the battery. Secure with wrench and coat terminal with petroleum jelly.

4. Install battery clamp, washers, and secure with wing nuts.

5. Place terminal covers over positive (+) and negative (−) battery posts.

INSTALL CUTTING UNITS (Fig. 7−10)

For Cutting Unit Models 04404, 04406, 04408 04450 and 04468.

Note: When sharpening, setting height−of−cut or performing other maintenance procedures on the cutting units, store the cutting unit reel motors in support tubes on front of frame to prevent damage to the hoses.

1. Remove cutting units from cartons. Assemble and adjust per the Operator's Manual for the cutting units . Use the Height Gauge bar from Loose Parts Kit to adjust height of cut.

2. Slide the cutting units under the pull frames and position the hoop on the top of cutting units over the lift arms (Fig. 7).

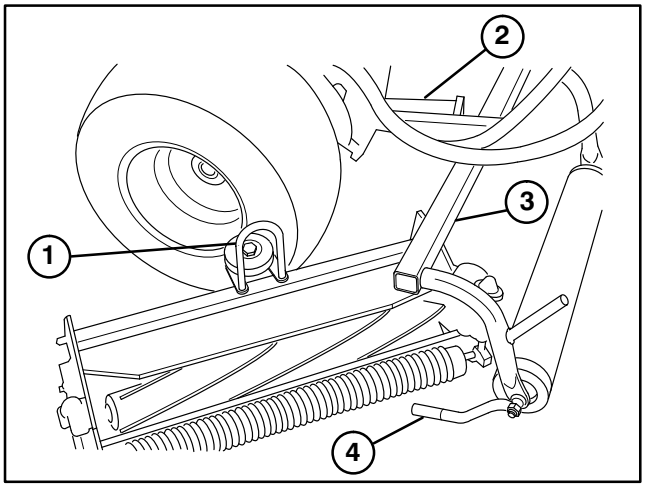

Figure 7

1. Hoop **3. Pull frame**
2. Lift arm **4. Pull arm**

3. Assemble the mount nuts for the reel drive motor to each cutting unit. Leave approximately 1/2 in. of threads exposed on each mount stud (Fig. 8).

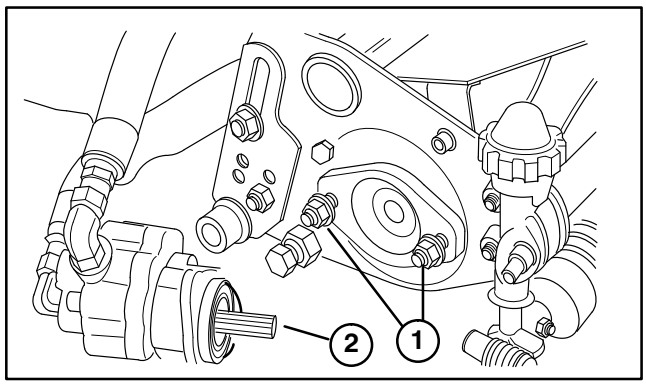

Figure 8

1. Motor mount nuts **2. Coat with grease**

4. Remove the protective covers from the cutting units and the reel drive motor shafts. Coat the spline shaft of the motor with clean grease and install the motor by rotating the motor clockwise so the motor flanges clear the studs. Rotate the motor counter−clockwise until the flanges are encircling the studs and tighten the mounting nuts (Fig. 8).

Note: Retain the protective covers for the cutting units. Install them whenever the reel drive motors are removed to protect the cutting unit bearings from contamination.

5. Slide the sleeve back on the ball joint and rotate the pull arm down so the socket fits over the ball stud. Release the sleeve so it slides over the stud and locks the assemblies together (Fig. 10).

6. Mount the baskets on the pull frames, loosen the jam nuts on the pull arms and adjust the ball sockets until there is 1/4 in. to 1/2 in. clearance between the lip of the basket and the reel blades (Fig. 9).

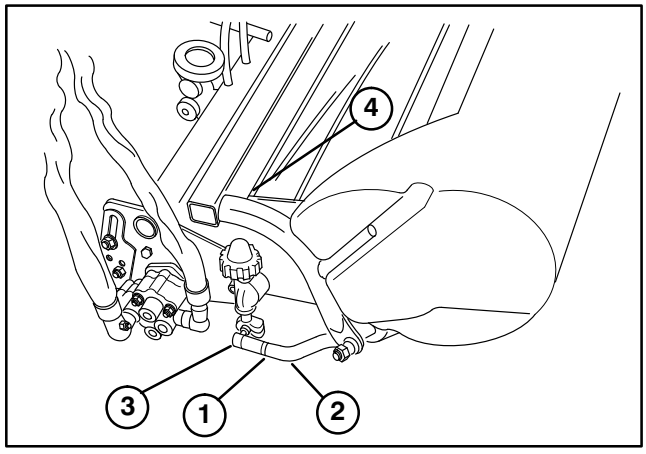

Figure 9

1. Jam nut **3. Ball joint−adjust for clearance**
2. Pull arm **4. 1/4−1/2 in. clearance**

Note: This prevents the basket from tipping the cutting unit forward causing the hoop to come off the lift arm while in the mowing operation.

Be sure the basket lips are equidistant from the reel blades all across each reel. If the basket is too close to the reel, it is possible for the reel to contact the basket when the cutting unit is raised off the ground.

7. Align the sockets in the ball joints so the open side of the socket is centered towards the ball stud. Tighten the jam nuts to secure the sockets in position (Fig. 9).

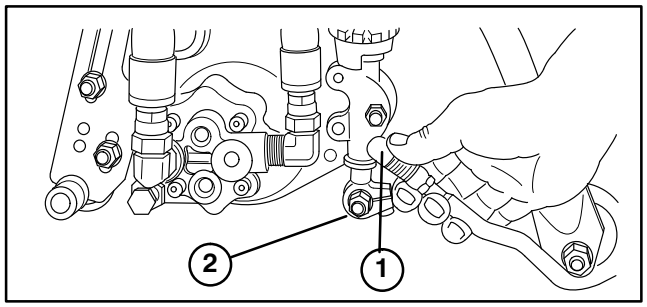

Figure 10

1. Slide back to mount
2. Ball stud
3. Swing down

INSTALL CUTTING UNITS (Fig. 11 – 13)

For Cutting Unit Models 04480, 04481, 04482 and 04483.

Note: When sharpening, setting height−of−cut or performing other maintenance procedures on the cutting units, store the cutting unit reel motors in support tubes on front of frame to prevent damage to the hoses.

1. Remove cutting units from cartons. Assemble and adjust per the Operator's Manual for the cutting units . Use the Height Gauge bar from Loose Parts Kit to adjust height of cut.

2. Mount a washer and ball stud to each end of front roller on cutting units (Fig. 11).

3. Slide the cutting unit under the pull frame while hooking the lift roller onto lift arm (Fig. 11).

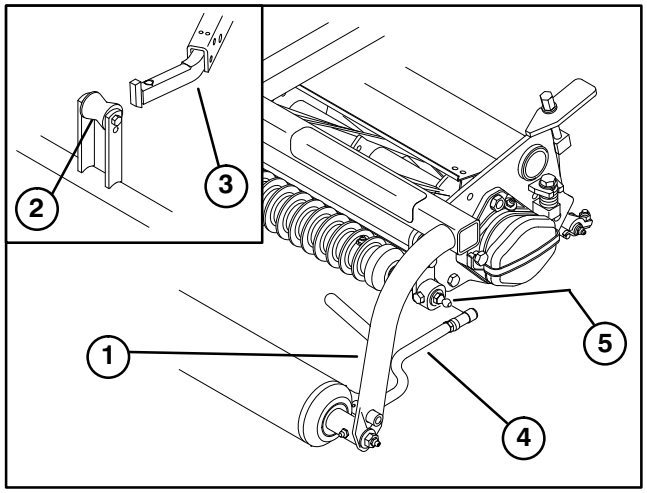

Figure 11

1. Pull frame
2. Lift roller
3. Lift arm
4. Pull arm
5. Ball stud

4. Slide the sleeve back on the ball joint and rotate the pull arm down so the socket fits over the ball stud. Release the sleeve so it slides over the stud and locks the assemblies together (Fig. 12).

5. Mount the baskets on the pull frames, loosen the jam nuts on the pull arms and adjust the ball sockets until there is 1/4 in. to 1/2 in. clearance between the lip of the basket and the reel blades.

Note: This prevents the basket from tipping the cutting unit forward causing the hoop to come off the lift arm while in the mowing operation.

Be sure the basket lips are equidistant from the reel blades all across each reel. If the basket is too close to the reel, it is possible for the reel to contact the basket when the cutting unit is raised off the ground.

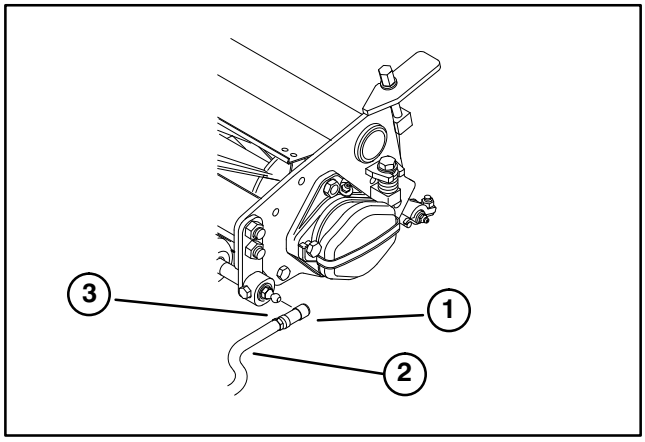

Figure 12

1. Ball joint
2. Pull arm
3. Jam nut

6. Align the sockets in the ball joints so the open side of the socket is centered towards the ball stud. Tighten the jam nuts to secure the sockets in position (Fig. 12).

7. Assemble the mounting capscrews for the reel drive motor to each cutting unit. Leave approximately 1/2 in. of threads exposed on each mounting capscrew (Fig. 13).

8. Remove the protective covers from the cutting units and the reel drive motor shafts.

Note: Retain the protective covers for the cutting units. Install them whenever the reel drive motors are removed to protect the cutting unit bearings from contamination.

9. Using a hand pump grease gun, fill cavity at end of cutting unit with #2 general purpose grease.

10. Coat the spline shaft of the motor with clean grease and install the motor by rotating the motor clockwise so the motor flanges clear the studs. Rotate the motor counter−clockwise until the flanges are encircling the studs and tighten the mounting capscrews (Fig. 13).

SET UP INSTRUCTIONS

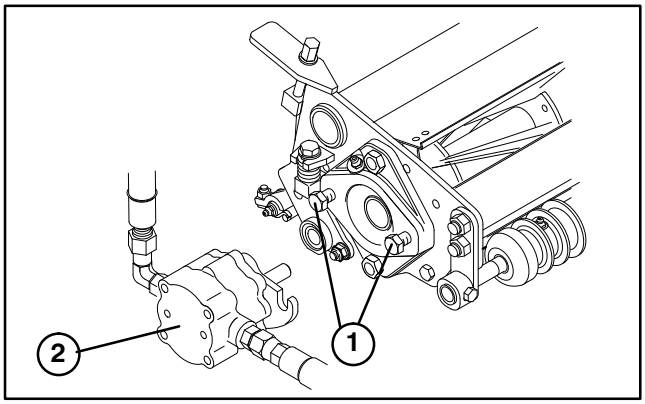

Figure 13

1. Capscrews
2. Drive motor

REAR BALLAST

This unit complies with the ANSI B71.4−1990 Standard when 40 lbs. of calcium chloride ballast is added to rear wheel.

IMPORTANT: If a puncture occurs in a tire with calcium chloride, remove unit from turf area as quickly as possible. To prevent possible damage to turf, immediately soak affected area with water.

BEFORE OPERATING

CHECK ENGINE OIL (Fig. 14)

The engine is shipped with 1 – 3/4 quarts (w/ filter) of oil in the crankcase; however, level of oil must be checked before and after engine is first started.

1. Position machine on a level surface.

2. Unscrew dipstick and wipe it with a clean rag. Screw dipstick into the tube and make sure it is seated fully. Unscrew dipstick out of tube and check level of oil. If oil level is low, remove filler cap from valve cover and add enough oil to raise level to FULL mark on dipstick.

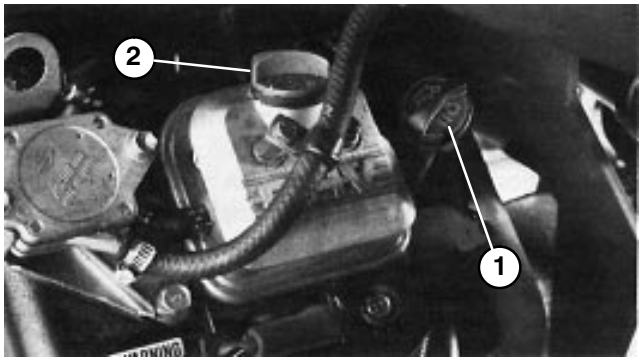

Figure 14
1. Dipstick
2. Filler cap

3. The engine uses any high-quality detergent oil having the American Petroleum Institute -API- "service classification" SC, SD, SE, SF or SG. Recommended viscosity (weight) is SAE 30.

4. Pour oil into opening in valve cover until the oil level is up to the "FULL" mark on the dipstick. Add the oil slowly and check the level often during this process. DO NOT OVERFILL.

IMPORTANT: Check level of oil every 8 operating hours or daily. Initially, change oil after the first 8 hours of operation; thereafter, under normal conditions, change oil every 50 hours and filter every 100 hours. However, change oil more frequently when engine is operated in extremely dusty or dirty conditions.

5. Install the filler cap and dipstick firmly in place.

FILLING GAS TANK (Fig. 15)

THE TORO COMPANY STRONGLY RECOMMENDS THE USE OF CLEAN, FRESH **UNLEADED** REGULAR GASOLINE IN TORO GASOLINE POWERED PRODUCTS. UNLEADED GASOLINE BURNS CLEANER, EXTENDS ENGINE LIFE, AND PROMOTES GOOD STARTING BY REDUCING THE BUILD – UP OF COMBUSTION CHAMBER DEPOSITS. LEADED GASOLINE CAN BE USED IF UNLEADED IS NOT AVAILABLE.

NOTE: NEVER USE METHANOL, GASOLINE CONTAINING METHANOL, GASOHOL CONTAINING MORE THAN 10% ETHANOL, GASOLINE ADDITIVES, PREMIUM GASOLINE, OR WHITE GAS BECAUSE ENGINE FUEL SYSTEM DAMAGE COULD RESULT.

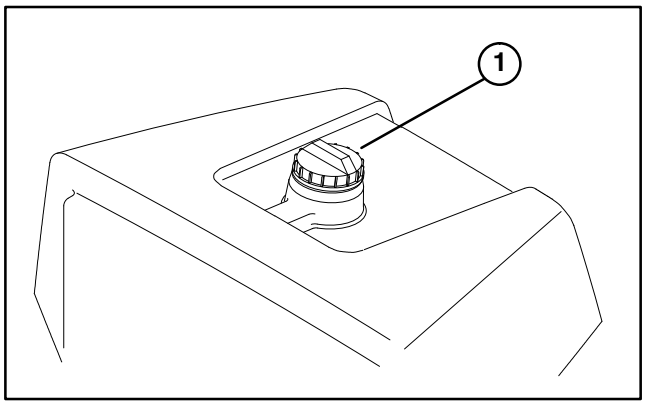

Figure 15
1. Fuel tank cap

1. Fill the gasoline tank to bottom of filler neck. DO NO OVERFILL. Install the cap and tighten securely in place.

DANGER

Because gasoline is flammable, caution must be used when storing or handling it. Do not fill fuel tank while engine is running, hot or when machine is in an enclosed area. Vapors may build up and be ignited by a spark or flame source many feet away. DO NOT SMOKE while filling the fuel tank to prevent the possibility of an explosion. Always fill fuel tank outside and wipe up any spilled gasoline before starting engine. Use a funnel or spout to prevent spilling gasoline before starting engine and fill tank to about

I inch from top of tank, not filler neck. Store gasoline in a clean safety – approved container and keep the cap in place on the container. Keep gasoline in a cool, well – ventilated place; never in an enclosed area such as a hot storage shed. To assure volatility, do not buy more than a 30 day supply of gasoline. Gasoline is a fuel for internal combustion engines; therefore, do not use it for any other purpose. Since many children like the smell of gas, keep it out of their reach because the fumes are explosive and dangerous to inhale.

BEFORE OPERATING

CHECK HYDRAULIC SYSTEM (Fig. 16)

The hydraulic system is designed to operate on anti−wear hydraulic fluid. The machines reservoir is filled at the factory with approximately 4.5 gallons of Mobil 424 hydraulic fluid. **Check level of hydraulic fluid before engine is first started and daily thereafter.**

Group 1 Hydraulic Fluid (Recommended for ambient temperatures consistently below 100˚ F.):

ISO type 46/68 anti−wear hydraulic fluid

Mobil	Mobil Fluid 424
Amoc	Amoco 1000
International Harvester	Hy−Tran
Texaco	TDH
Shell	Donax TD
Union OIl	Hydraulic/Tractor Fluid
Chevron	Tractor Hydraulic Fluid
BP Oil	BP HYD TF
Boron OIl	Eldoran UTH
Exxon	Torque Fluid
Conoco	Power−Tran 3
Kendall	Hyken 052
Phillips	HG Fluid

Note: The fluids within this group are interchangeable.

Group 2 Hydraulic Fluid (Recommended for ambient temperatures consistently above 70˚ F.):

ISO type 68 anti−wear hydraulic fluid

Mobil	DTE 26 or DTE 16
Shell	Tellus 68
Amoco	Rykon Oil 68
Arco	Duro AW S−315
Boron	Industron 53
BP Oil	Energol HLP68
Castrol	Hyspin AWS68
Chevron	Chevron EP68
Citgo	Citgo A/W68
Conoco	Super Hydraulic Oil 31
Exxon	Nuto H68
Gulf	68AW
Pennzoi	lAW Hyd Oil 68
Phillips	Magnus A315
Standard	Industron 53
Texaco	Rando HD68
Union	Unax AW 315

Note: The fluids within this group are interchangeable.

Note: Mobil SAE 10W30 or 10W40 may be substituted if oils in Group 2 are not available.

IMPORTANT: Two groups of hydraulic fluid are specified to allow optimal operation of the machine in a wide range of temperatures encountered. The group 1 fluids are a multi−viscosity hydraulic fluids which allows operation at lower temperatures without the increased viscosity, which is associated with straight viscosity fluids.

Using the Mobil 424 type fluids in the higher ambient temperatures may result in decreased efficiency in some of the hydraulic components compared to using the Mobil DTE 26 type fluids.

The Mobil DTE 26 type fluids are straight viscosity fluids which remain slightly more viscous at higher temperatures than the multi−viscosity fluids.

Using the Mobil DTE 26 type fluids in the lower ambient temperatures may result in harder starting, increased engine laboring while cold, sluggish or non−operating valve spools while cold and increase filter back pressure due to the higher fluid viscosity.

It is recommended that you select which set of conditions (either ambient temperatures above 70˚ F. or below 100˚ F.), and use that type of fluid throughout the year, rather than changing fluid types several times per year.

Group 3 Hydraulic Fluid (Biodegradable):

ISO VG 32/46 anti−wear hydraulic fluid

Mobil	EAL 224 H

Note: This biodegradable hydraulic fluid in this group is not compatible with the fluids in group 1 or 2.

NOTE: When changing from one type of hydraulic fluid to the other, be certain to remove all the old fluid from the system, because some brands of one type are not completely compatible with some brands of the other type of hydraulic fluid.

IMPORTANT: Use only hydraulic oils specified. Other fluids could cause system damage.

Note: A red dye additive for the hydraulic system oil is available in 2/3 oz. bottles. One bottle is sufficient for 4−6 gal. of hydraulic oil. Order Part No. 44−2500 from your Authorized Toro Distributor.

1. Position machine on a level surface. Make sure machine has cooled down so oil is cold.

2. Remove the cap from the top of the reservoir and check the fluid level. The fluid should be approximately 3−1/2 in. below the top of the fill hole

3. If oil level is low, slowly fill with Mobil 424 or equivalent hydraulic oil until level is up to correct level. Do not mix oils. Install cap.

IMPORTANT: To prevent system contamination, clean top of hydraulic oil containers before puncturing. Assure pour spout and funnel are clean.

BEFORE OPERATING

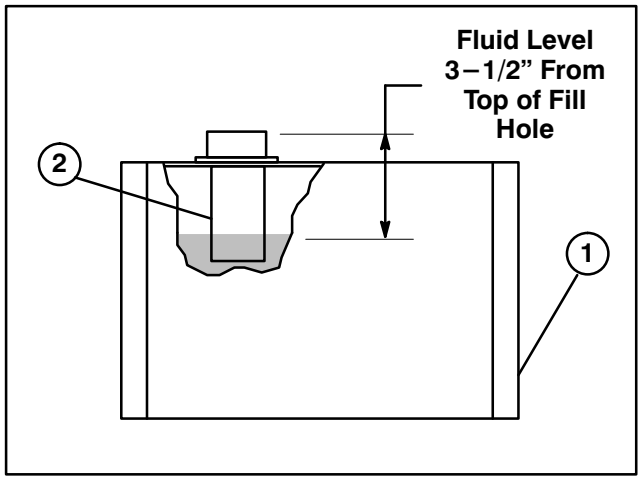

Figure 16

1. Hydraulic reservoir
2. Screen

Note: Make a close visual inspection of the hydraulic components. Inspect for leaks, loose fasteners, missing parts, improperly routed lines, etc. Make any corrections necessary.

TIRE PRESSURE

The tires are over−inflated at the factory for shipping purposes. Reduce the pressure to the proper levels before starting the unit.

Vary the tire pressure for the front wheels, depending upon your turf conditions, from a minimum of 8 P.S.I. to a maximum of 12 P.S.I.

Vary the tire pressure for the rear wheel from a minimum of 8 P.S.I. to a maximum of 15 P.S.I.

CHECK TORQUE OR WHEEL NUTS

WARNING

Torque wheel nuts to 40−50 ft−lb after 1−4 hours of operation and again after 10 hours of operation and every 200 hours thereafter. Failure to maintain proper torque could result in personal injury.

CONTROLS

MOW PEDAL (Fig.17) – Depressing Mow Pedal FULLY during operation lowers the cutting units and starts the reels. The Mow Pedal will stay depressed due to detent action of the valve bank during operation. Operator need not hold pedal down.

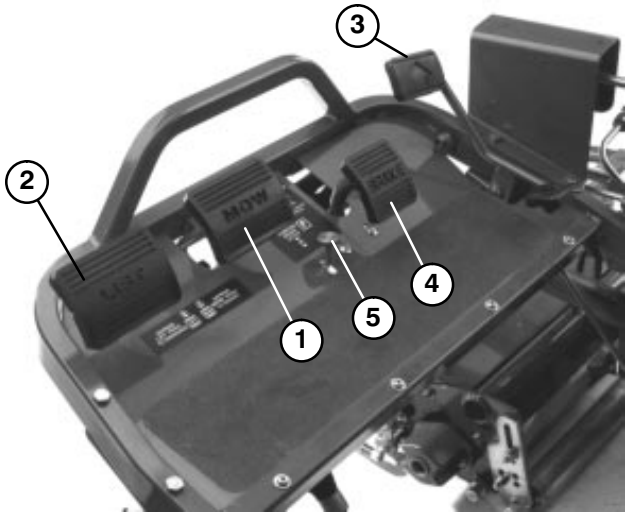

Figure 17

1. Mow pedal
2. Lift pedal
3. Traction pedal
4. Brake pedal
5. Parking brake button

BRAKE PEDAL (Fig.17) –The Brake Pedal actuates an automotive drum–type mechanical brake located at each traction wheel.

LIFT PEDAL (Fig. 17) – Depressing the Lift Pedal during operation stops the reels from turning and lifts the cutting units. Lift Pedal must be FULLY depressed until cutting units are fully raised and have stopped rotation.

PARKING BRAKE BUTTON (Fig. 17) – Depressing the Brake Pedal to actuate the brake assembly, then depressing the small button indicated will keep the brakes actuated for parking. Disengage by depressing the brake pedal. Form the habit of locking the parking brake before you leave the machine.

TRACTION AND STOPPING PEDAL (Fig. 17) –Traction pedal has three functions; one to make the machine move forward, two, to move it backward and three, to stop machine. Depress top of pedal to move forward and bottom of pedal to move backward or to assist in stopping when moving forward. Also, allow pedal to move to neutral position to stop machine. For operator comfort, do not rest heel of foot on reverse, when operating forward (Fig. 18).

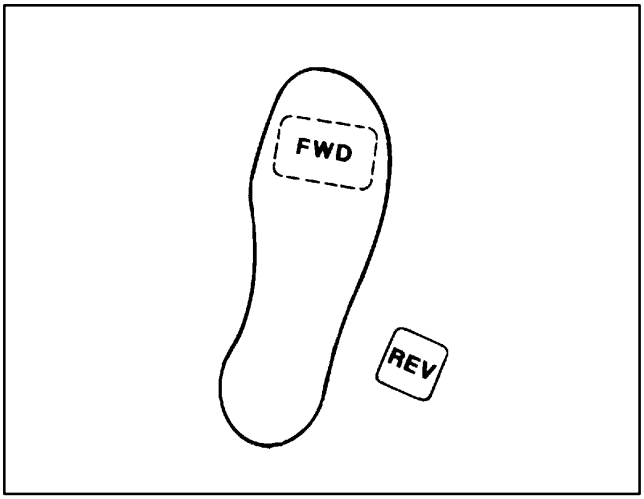

Figure 18

THROTTLE CONTROL (Fig. 19) – The Throttle Control gives the operator the ability to control the speed of the engine. Moving the Throttle Control toward the “FAST” position increases engine RPM; moving Throttle Control toward “SLOW” will decrease engine RPM.

Note: The engine cannot be stopped by the use of the throttle control.

CHOKE (Fig.19) – To start a cold engine, close carburetor choke by moving choke control forward to the “CLOSED” position. After engine starts, regulate choke to keep engine running smoothly. As soon as possible, open the choke by pulling it rearward to the “OPEN” position. A warm engine requires little or no choking.

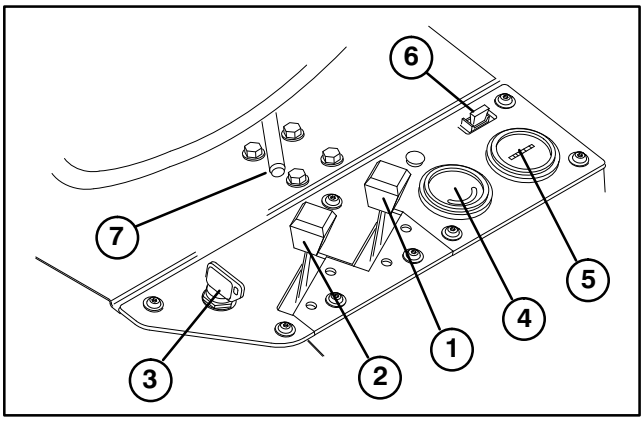

Figure 19

1. Choke control
2. Throttle control
3. Ignition switch
4. Voltmeter
5. Hour meter
6. Fuse (20 amp)
7. Seat adjusting handle

IGNITION SWITCH (Fig. 19) – Insert key into switch, turn clockwise as far as possible to “START” position to start engine. Release key as soon as engine starts; key will move to “ON” position. Turn key counter–clockwise to “OFF” position to stop engine.

CONTROLS

VOLTMETER (Fig. 19) – The voltmeter indicates the electrical system voltage.

FUSE (Fig.19) – Fuse is part of the electrical circuit. It contains a 20 Amp fuse.

HOUR METER (Fig.19) – Indicates the total hours of machine operation. The hour meter starts to function whenever the key switch is rotated to "ON".

SEAT ADJUSTING HANDLE (Fig.19) – Lever on left side of seat allows four inch fore and aft adjustment.

MOW LOCKOUT LEVER (Fig. 20) – Lockout lever locks mow pedal preventing accidental starting of cutting units. To unlock, pull mow lockout pin outward, rotate clockwise and insert end into rear hole in bracket.

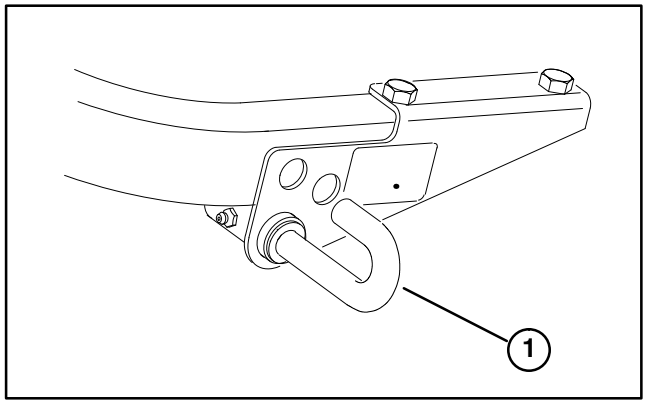

Figure 20
1. Mow lockout lever pin

SHIFT SELECTOR (Fig. 21) – Located on the top of the right hand panel. Provides two (2) traction selections, plus a "NEUTRAL" position. It is permissible to shift from one selection to another while the Greensmaster 3050 is in motion. No damage will result.

1. Neutral – Used for starting Greensmaster 3050 engine.

2. No. 1 Position – Used for greens mowing operation.

3. No. 2 Position – Used for transport operation.

Note: If Greensmaster 3050 is operated in reverse with cutting units down the cutting units will be pulled off the lift arms.

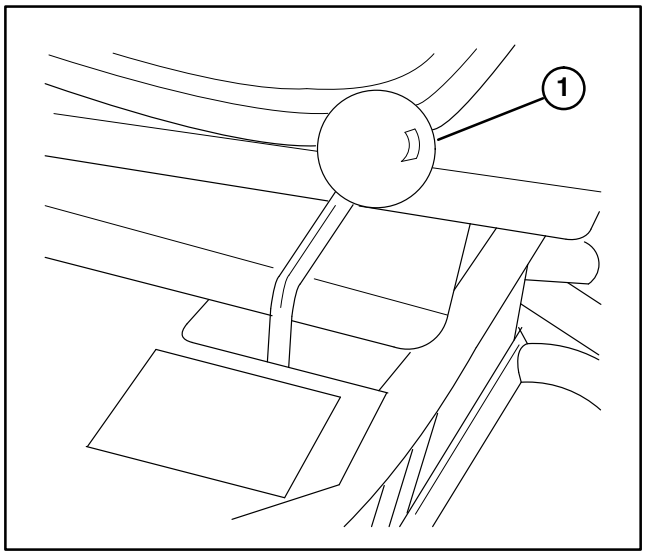

Figure 21
1. Shift selector

OPERATING INSTRUCTIONS

BREAK–IN PERIOD

1. Refer to the Engine Manual supplied with the Greensmaster 3050 for oil change and maintenance procedures recommended during break–in period.

2. Only 8 hours of mowing operation is required for the Greensmaster 3050 break–in period.

3. Since the first hours of operation are critical to future dependability of the machine, monitor its functions and performance closely so that minor difficulties, which could lead to major problems, are noted and can be corrected. Inspect the Greensmaster 3050 frequently during break–in for signs of oil leakage, loose fasteners, or any other malfunction.

4. To assure optimum performance of the brake system, burnish (break–in) the brakes before use. To burnish brakes: Firmly apply brakes and drive machine at mowing speed until brakes are hot, as indicated by their smell. An adjustment to the brakes may be required after break–in, refer to Brake Adjustment.

STARTING INSTRUCTIONS

Note: Inspect areas beneath mowers to be certain they are clear of debris.

1. Unlock mow lockout lever by pulling pin outward, rotating clockwise and inserting end into rear hole in bracket.

2. Sit on seat, place shift selector in “Neutral”, check mow and lift pedals to be sure they are level with one another.

3. Remove foot from traction pedal and make sure pedal is in neutral position.

4. Move choke lever to ON position – when starting a cold engine – and throttle lever to half throttle position.

5. Insert and rotate ignition key clockwise until the engine starts. After engine starts, regulate choke to keep engine running smoothly. As soon as possible, open the choke by pulling it rearward to the “OFF” position. A warm engine requires little or no choking.

6. Check the machine out with the following procedures after the engine has started:

A. Move throttle control to “FAST” position and momentarily engage reels by depressing the mow pedal (cutting units should drop and all reels should turn).

B. Operate lift pedal; cutting reels should stop and cutting units raise to full transport position.

Note: Stop the engine. Check the lip of each basket to be sure it is not in contact with the reel during operation. Re–adjust the pull arms if contact is noted; refer to Installing Cutting Units.

C. Depress the brake pedal to keep the Greensmaster 3050 from moving and operate the traction pedal through the forward and reverse positions.

D. Continue the above procedure for 1–2 minutes; neutralize the traction lever and mow and lift pedals, lock the parking brake, and turn the engine off. Check for oil leaks; if oil leaks appear, check for tightness of hydraulic fittings. If oil leaks continue to appear, contact your local TORO Distributor for assistance and, if necessary, replacement parts.

IMPORTANT: Motor or wheel seals may show some trace of oil for a short period of time until the Greensmaster 3050 break–in period has transpired.

Note: Since the Greensmaster 3050 is brand–new and the bearings and reels are tight, it is necessary to use the “FAST” throttle control position for this check. A fast throttle setting may not be required after the break–in period.

CHECK INTERLOCK SYSTEM OPERATION (Fig. 22)

The purpose of the interlock system is to prevent the engine from cranking or starting unless the operator is on the seat, the shift selector is in NEUTRAL and the cutting units are DISENGAGED. In addition, the engine will stop when the cutting units are engaged or if shift selector is in the No.1 or No.2 position with operator off the seat. Perform the following system checks daily to be sure the interlock system is operating correctly.

CAUTION

THE INTERLOCK SWITCHES ARE FOR THE OPERATOR’S PROTECTION, SO DO NOT DISCONNECT THEM. CHECK OPERATION OF THE SWITCHES DAILY TO ASSURE INTERLOCK SYSTEM IS OPERATING. IF A SWITCH IS DEFECTIVE, REPLACE IT BEFORE OPERATING. REGARDLESS IF SWITCHES ARE OPERATING PROPERLY OR NOT, REPLACE THEM EVERY TWO YEARS TO ASSURE MAXIMUM SAFETY. DO NOT RELY ENTIRELY ON SAFETY SWITCHES – USE COMMON SENSE!

1. Engage parking brake, move shift selector to neutral, remove foot from traction pedal and make sure pedal is in neutral position and depress lift pedal and release it. Lift off seat and try to start engine. The engine should not crank, which means the interlock system is operating correctly. If the engine did not crank, proceed to step 2. If engine cranked, contact your local TORO Distributor for assistance.

OPERATING INSTRUCTIONS

2. Sit on the seat, engage parking brake and depress lift pedal fully and release it. Move shift selector to #1 and #2 positions while trying to start the engine in each position. The engine should not crank, which means traction switch on valve bank is operating correctly. If engine did not crank, proceed to step 3. If engine cranked, contact your local TORO Distributor for assistance.

3. Sit on the seat, engage parking brake, depress lift pedal and release it. Move shift selector to Neutral and try to start the engine. The engine should start and continue to run, which means traction switch and mow/lift switch on valve bank are operating correctly – proceed to step 4 . If engine cranked but did not start, problem is not in the interlock system. If engine did not crank, contact your local TORO Distributor for assistance.

4. Sit on the seat, engage parking brake and move shift selector to neutral. Depress mow pedal and try to start engine. The engine should not crank, which means the mow–lift switch is operating correctly. If the engine did not crank, proceed to step 5. If engine cranked, contact your local TORO Distributor for assistance.

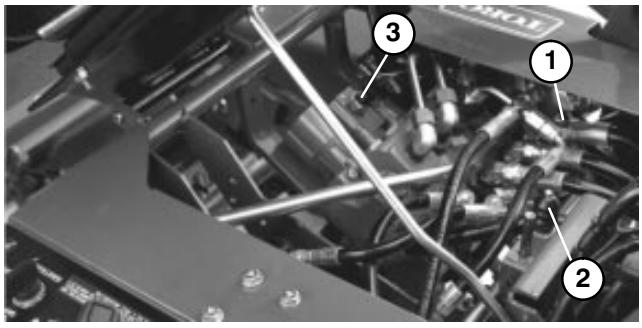

Figure 22

1. Traction switch
2. Seat switch
3. Mow/lift switch

5. Sit on the seat, move shift selector to Neutral, depress lift pedal and release it. Start engine and drive to an open area that is free of debris and foreign objects. Keep all people, especially children away from front of machine and out of the area of operation. Move shift selector to Neutral, make sure mow pedal is disengaged, set throttle control at half speed and engage parking brake. Hold steering wheel, brace feet on foot deck and brake pedal, and move shift selector to #1 position. Carefully lift off the seat: the engine should stop. If engine stops, interlock system is operating correctly.

6. Repeat above check with shift selector in #2 position. If engine does not stop, stop the engine and find the problem before operating machine again. If assistance required, contact your local TORO Distributor.

PREPARING MACHINE FOR MOWING

To assist in aligning the machine for successive cutting passes, it is suggested the following be done to the No. 2 and No. 3 cutting unit baskets:

1. Measure in approximately 5 inches from the outer edge of each basket.

2. Either place a strip of white tape or paint a line onto each basket paralleling the outer edge of each basket (Fig. 23)

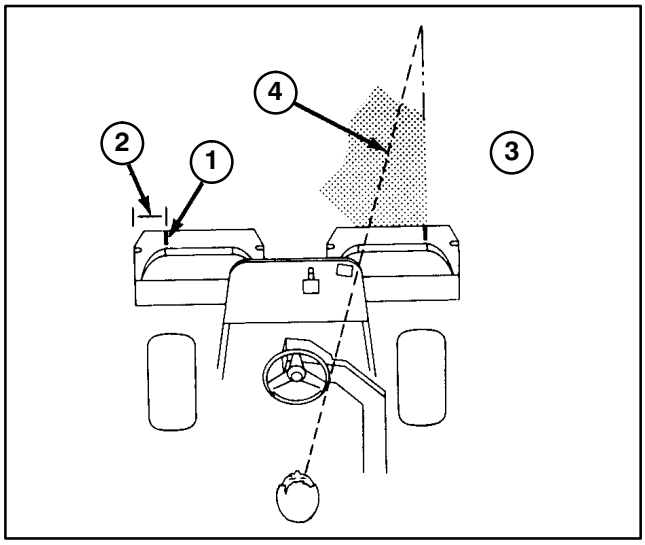

Figure 23

1. Alignment strip
2. Approx. 5 in.
3. Cut grass on right
4. Keep focal spot 6–10 ft ahead of machine

TRAINING PERIOD

Before mowing greens with the GREENSMASTER 3050, The Toro Company suggests that you find a clear area and practice starting and stopping, raising and lowering cutting units, turning, etc. This training period will be beneficial to the operator in gaining confidence in the performance of the GREENSMASTER 3050.

IMPORTANT: If you shift to the No. 2 position while cutting greens, no increase in speed will result. However, a sudden increase in speed will develop when you actuate the lift pedal. For safety purposes, it is recommended that you use only the No. 1 position for cutting greens and the No. 2 position for transport.

CAUTION: This product may exceed noise levels of 85 dB(A) at the operator position. Ear protectors are recommended, for prolonged exposure, to reduce the potential of permanent hearing damage.

OPERATING INSTRUCTIONS

BEFORE MOWING

Inspect the green for debris, remove the flag from the cup, and determine the direction best to mow. Base the direction to mow on the previous mowing direction. Always mow in an alternate pattern from the previous mowing, so that the grass blades will be less apt to lay down and therefore be difficult to trap between the reel blades and bed knife.

MOWING PROCEDURES

1. Approach the green with the shift selector in the No. 1 position. Start on one edge of the green so the ribbon procedure of cutting may be used. This holds compaction to a minimum and leaves a neat, attractive pattern on the greens.

IMPORTANT: Shift to the No.1 position when approaching a green because machine speed will automatically be reduced when cutting units are engaged. Higher speed will resume when cutting units are disengaged.

2. Actuate the mow pedal as the front edge of the grass baskets cross the outer edge of the green. This procedure drops the cutting units to the turf and starts the reels.

Note: The No. 1 (rear) cutting unit reel will not start until all the cutting units are on the ground and No. 2 and No. 3 cutting units are cutting.

IMPORTANT: Familiarize yourself with the fact that the No. 1 cutting unit reel is delayed and therefore, you should practice to try to gain the required timing necessary to minimize the cleanup mowing operation.

3. Overlap a minimal amount with the previous cut on return passes. To assist in maintaining a straight line across the green and keep the machine an equal distance from the edge of the previous cut, establish an imaginary sight line approximately 6 to 10 feet ahead of the machine to the edge of the uncut portion of the green (Fig. 23 & 24). Some find it useful to include the outer edge of the steering wheel as part of the sight line; i.e. keep the steering wheel edge aligned with a point that is always kept the same distance away from the front of the machine (Fig. 23 & 24).

4. As the front of the baskets cross the edge of the green, depress the lift pedal. This will stop the reels and lifts the cutting units. Timing of this procedure is important, so the mowers do not cut into the fringe area. However, as much of the green as possible should be cut to minimize the amount of grass left to mow around the outer periphery.

5. Cut down on operating time and ease lineup for the next pass by momentarily turning the machine in opposite direction, then turning in the direction of the uncut portion; i.e., if intending to turn right, first swing slightly left, then right. This will assist in getting the machine more quickly aligned for the next pass. Follow the same procedure for turning in the opposite direction. It's good practice to try to make as short a turn as possible. However, turn in a wider arc during warmer weather to minimize the possibility of bruising the turf.

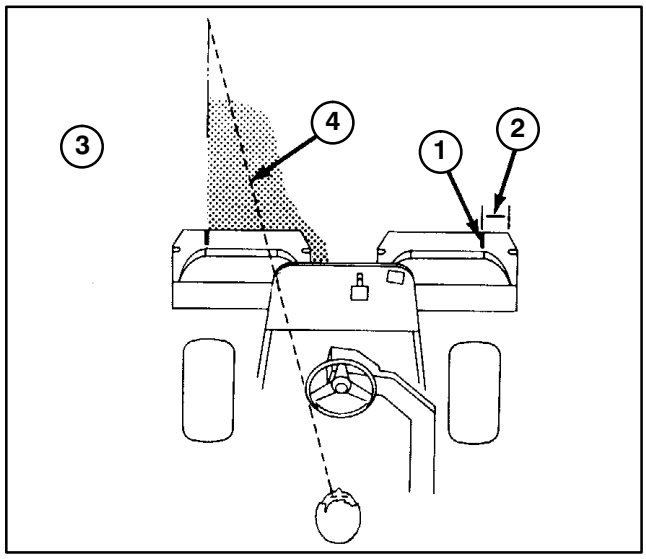

Figure 24

1. Alignment strip
2. Approx. 5 in.
3. Cut grass on right
4. Keep focal spot 6–10 ft ahead of machine

IMPORTANT: The Greensmaster 3050 should never be stopped on a green with the cutting unit reels operating as damage to the turf may result. Stopping on a wet green with the Greensmaster 3050 may leave marks or indentations from the wheels.

IMPORTANT: Prolonged idling of the machine after heavy use may cause a false alarm in the leak detector system, due to oil contracting as it cools. If this occurs, turn engine off for approximately one minute, while the main hydraulic tank is refilled from auxiliary tank.

6. Finish cutting the green by mowing the outer periphery. Be sure to change the direction of cutting from the previous mowing. Always keep weather and turf conditions in mind and be sure to change the direction of mowing from the previous cutting. Replace the flag.

7. Empty the grass baskets of all clippings before transporting to the next green. Heavy wet clippings place an undue strain on the baskets and will add unnecessary weight to the machine, thereby increasing the load on the engine, hydraulic system, brakes, etc.

OPERATING INSTRUCTIONS

TRANSPORT OPERATION

Make sure the cutting units are in the full up position. Set the shift selector in No. 2 if conditions will permit faster ground speed. Shift to No. 1 and operate at slower ground speeds in rough or hilly areas. Use the brakes to slow the machine while going down steep hills to avoid loss of control. Always approach rough areas at a reduced speed (shift selector in No. 1), and cross severe undulations carefully. Familiarize yourself with the width of the Greensmaster 3050. Do not attempt to pass between objects that are close together so that costly damage and down time can be prevented.

INSPECTION AND CLEAN–UP AFTER MOWING

At the completion of mowing operation, thoroughly wash the machine with a garden hose without a nozzle so excessive water pressure will not cause contamination and damage to seals and bearings. After cleaning, it is recommended the machine be inspected for possible hydraulic fluid leaks, damage or wear to hydraulic and mechanical components and the cutting units checked for sharpness. Also, lubricate the mow and lift pedal and brake shaft assembly with SAE 30 oil or spray lubricant to deter corrosion and help keep the machine performing satisfactorily during the next mowing operation.

SERVICE INTERVAL CHART

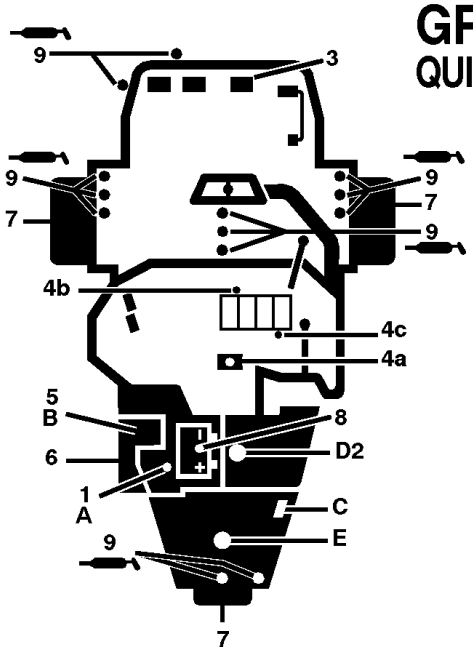

GREENSMASTER 3050
QUICK REFERENCE AID

SEE OPERATOR'S MANUAL

CHECK/SERVICE (daily)
1. OIL LEVEL, ENGINE
2. OIL LEVEL, HYDRAULIC TANK
3. BRAKE FUNCTION
4. INTERLOCK SYSTEM:
   - 4a. SEAT INTERLOCK
   - 4b. MOW - LIFT INTERLOCK
   - 4c. TRACTION INTERLOCK
5. AIR FILTER & PRECLEANER
6. ENGINE COOLING FINS
7. TIRE PRESSURE
   (8 - 12 psi front, 8 - 15 psi rear)
   WHEEL NUT TORQUE (40-50 FT-LBS.)
8. BATTERY
9. LUBRICATION ●

FLUID SPECIFICATIONS / CHANGE INTERVALS

See operator's manual for initial change	FLUID TYPE	CAPACITY	CHANGE INTERVALS		FILTER PART NO.
			FLUID	FILTER	
A. ENGINE OIL	SAE 30 SG	*1.75 qts.	50 HRS.	100 HRS.	491056
B. AIR CLEANER	———	———	———	100 HRS.	394018
C. FUEL FILTER	———	———	———	1000 HRS.	94-2690
D. HYDRAULIC OIL	MOBIL 424	4 1/2 GAL.	2000 HRS.	2000 HRS.	68-9880
E. FUEL TANK	UNLEADED GAS	7 1/2 GAL.	———	———	———

*Including filter

95-7113

DAILY MAINTENANCE CHECKLIST

Daily Maintenance: (duplicate this page for routine use)

Maintenance Check Item ➧	Daily Maintenance Check For Week Of _____						
	MON	TUES	WED	THURS	FRI	SAT	SUN
✓ Safety Interlock Operation							
✓ Instrument Operation							
✓ Brake Operation							
✓ Fuel Level							
✓ Engine Oil Level							
Clean Engine Air Cooling Fins							
Inspect Air Filter Pre–Cleaner							
✓ Unusual Engine Noises							
✓ Hydraulic Hoses for Damage							
✓ Fluid Leaks							
✓ Tire Pressure							
✓ Reel–to–Bedknife Adjustment							
✓ Height–of–Cut Adjustment							
Lubricate All Grease Fittings[1]							
Lubricate Mow, Lift, & Brake Linkage							
Touch–up Damaged Paint							

[1] = Immediately after every washing, regardless of the interval listed.

Notation for areas of concern: Inspection performed by_____

Item	Date	Information
1		
2		
3		
4		
5		
6		
7		
8		

Check proper section of Operator's Manual for fluid specifications

LUBRICATION

CAUTION

Before servicing or making adjustments to the machine, stop engine and remove key from the switch.

The traction unit has grease fittings that must be lubricated regularly with No. 2 General Purpose Lithium Base Grease. If machine is operated under normal conditions, lubricate all bearings and bushings after every 50 hours of operation.

The traction unit bearings and bushings that must be lubricated are: Rear wheel bearings (1) (Fig. 25), Steering fork shaft (1) (Fig. 26), Lift arm pivot (3), Pivot hinge (3) (Fig. 27), Pull frame shaft and roller (12) (Fig. 28), Mow lift pivot (1) (Fig. 29), Lift cylinders (3) (Fig. 30) and Mow lockout lever (Fig. 31).

1. Wipe grease fitting clean so foreign matter cannot be forced into the bearing or bushing.

2. Pump grease into the bearing or bushing.

3. Wipe up excess grease.

4. Apply grease to reel motor spline shaft and onto lift arm when cutting unit is removed for service.

5. Apply a few drops of SAE 30 engine oil or spray lubricant (WD 40) to all pivot points daily after cleaning.



Figure 25

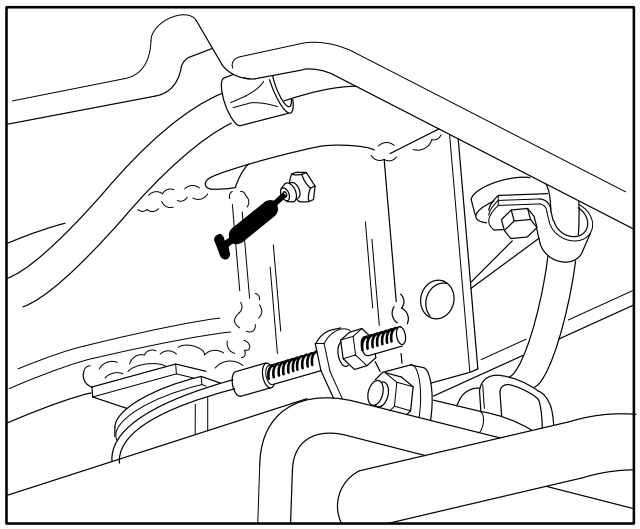

Figure 26

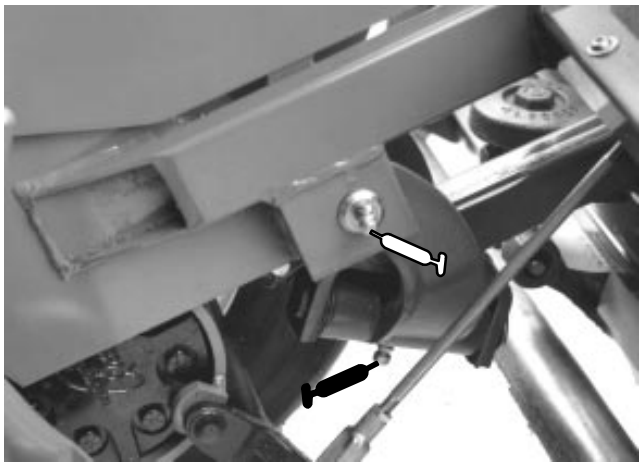

Figure 27

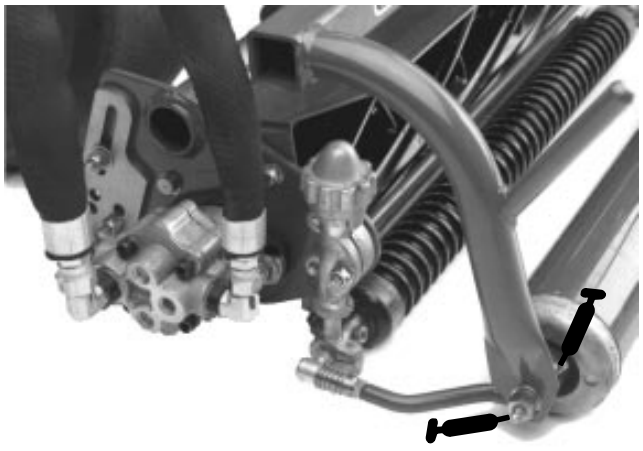

Figure 28

LUBRICATION



Figure 29

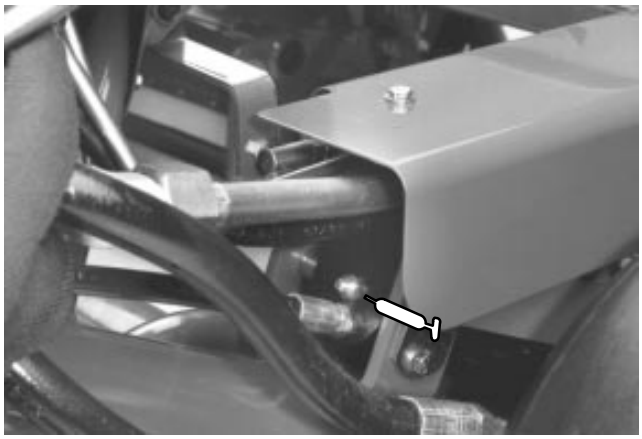

Figure 30

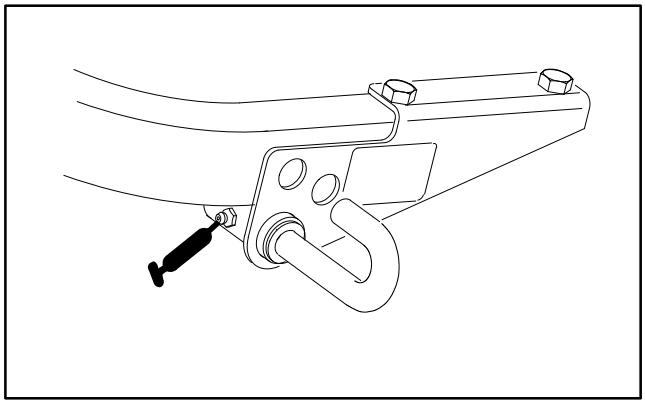

Figure 31

MAINTENANCE

CAUTION

Before servicing or making adjustments to the machine, stop engine and remove key from the switch.

CHANGING ENGINE OIL AND FILTER (Fig. 32)

Change oil and filter initially after the first 8 hours of operation, thereafter change oil every 50 hours and filter every 100 hours.

1. Remove drain plug and let oil flow into drain pan. When oil stops, install drain plug.

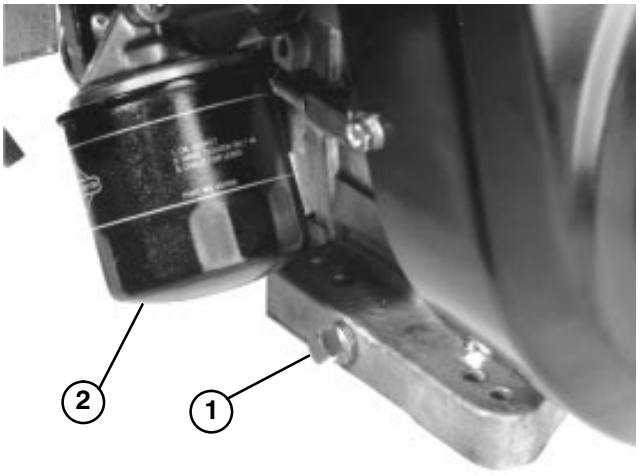

Figure 32
1. Drain plug
2. Oil filter

2. Remove oil filter. Apply a light coat of clean oil to the new filter gasket.

3. Screw filter on by hand until gasket contacts filter adapter, then tighten 1/2 to 3/4 turn further. DO NOT OVER−TIGHTEN.

4. Add oil to crankcase, refer to CHECK ENGINE OIL.

5. Dispose of oil properly.

SERVICING AIR CLEANER (Fig. 33−34)

Service air cleaner foam pre −cleaner after every 50 operating hours and air cleaner cartridge after every 100 operating hours. More frequent cleaning is required when operating in dusty or dirty conditions.

1. Release locking clips and remove air cleaner cover. Clean cover thoroughly.

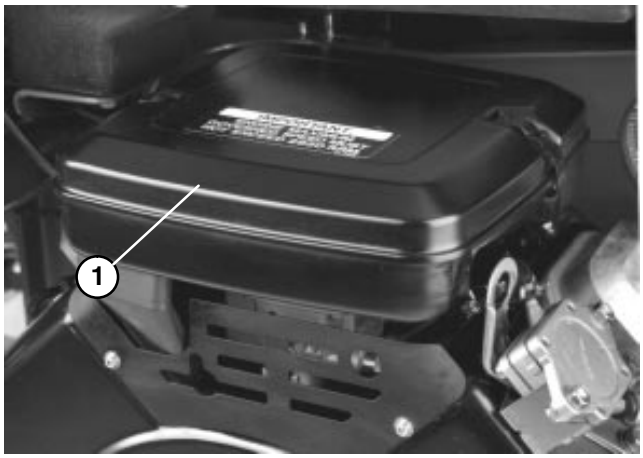

Figure 33
1. Air cleaner cover

2. Remove wing nut securing elements to air cleaner body.

3. If foam element is dirty, remove it from paper element. Clean thoroughly.

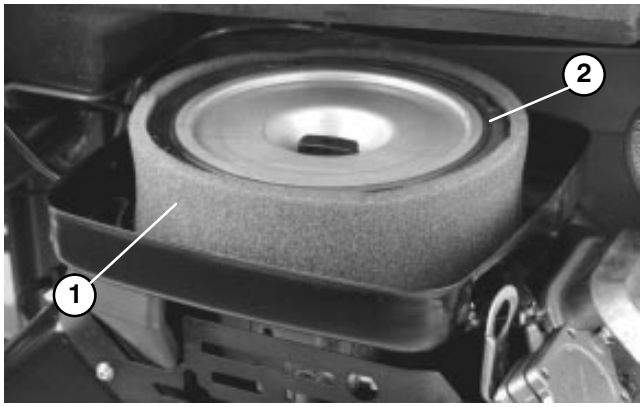

Figure 34
1. Foam element 2. Paper element

A.WASH foam element in a solution of liquid soap and warm water. Squeeze to remove dirt, but do not twist because foam may tear.

B. DRY by wrapping in a clean rag. Squeeze rag and foam element to dry.

C. SATURATE element with clean engine oil. Squeeze element to remove excess oil and to distribute oil thoroughly. An oil damp element is desirable.

4. When servicing foam element, check condition of paper element. Clean by gently tapping on a flat surface or replace as required.

5. Reinstall foam element, paper element and air cleaner cover.

IMPORTANT: Do not operate engine without air cleaner element because extreme engine wear and damage will likely result.

MAINTENANCE

ADJUSTING THROTTLE CONTROL

(Fig. 35)

Proper throttle operation is dependent upon proper adjustment of throttle control. Before adjusting the carburetor, assure the throttle control is operating properly.

1. Loosen cable clamp screw securing cable to engine.

2. Move remote throttle control lever forward to FAST position.

3. Pull firmly on throttle cable until back of swivel contacts stop.

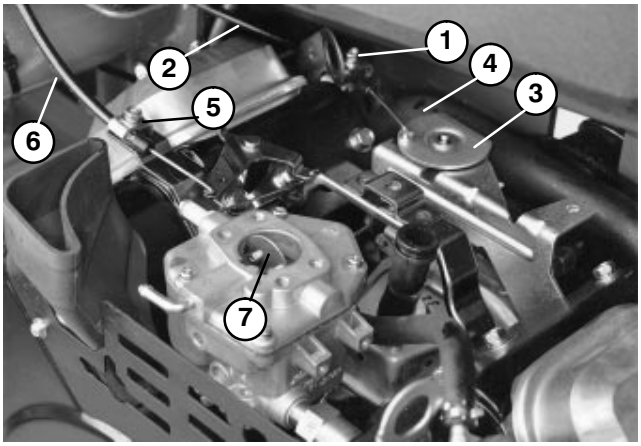

Figure 35

1. Throttle casing clamp screw
2. Throttle cable
3. Swivel
4. Stop
5. Choke casing clamp screw
6. Choke cable
7. Choke butterfly

4. Tighten cable clamp screw and check engine RPM setting.

High Idle: 2800 + 50 −100
Low Idle: 1400 ± 50

ADJUSTING CHOKE CONTROL (Fig. 35)

1. Loosen cable clamp screw securing cable to engine.

2. Move remote choke control lever forward to CLOSED position.

3. Pull firmly on choke cable until choke butterfly is completely closed, then tighten cable clamp screw.

ADJUSTING CARBURETOR AND SPEED CONTROL (Fig. 36)

IMPORTANT: Before the carburetor and speed control are adjusted, the throttle and choke controls must be adjusted properly.

WARNING

Engine must be running during adjustment of the carburetor and speed control. To guard against possible personal injury, shift into neutral, and engage parking brake. Keep hands, feet, face, and other parts of the body away from the cutter blades, and any rotating engine parts.

1. Start engine and let it run at half throttle for approximately five minutes to warm up.

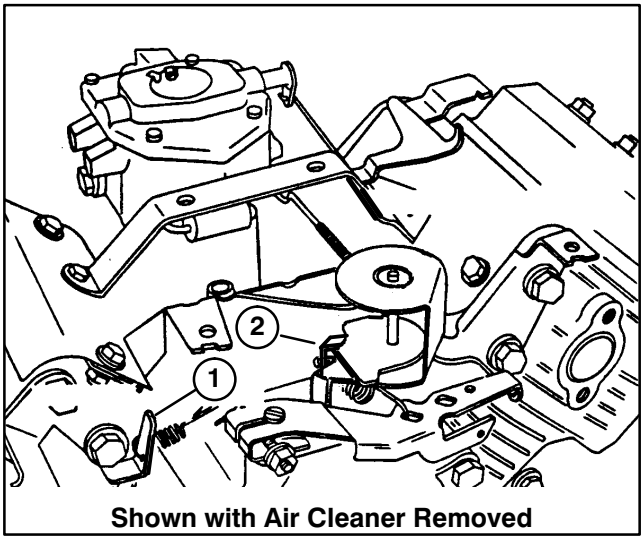

Shown with Air Cleaner Removed

Figure 36

1. Governed idle spring anchor tang
2. High speed spring anchor tang

2. Move the throttle control to SLOW setting. Hold governor lever so throttle lever is in the idle position (against idle stop screw) and adjust idle stop screw to 1400 ± 50 rpm by turning the screw in or out. Check speed with a tachometer.

3. Turn the idle mixture screw slowly clockwise (lean mixture) until the engine speed just starts to decrease. Note position of the needle.

Now turn the idle mixture screw slowly counterclockwise (rich mixture) until the engine speed just starts to decrease. Note position of the needle.

Set the screw midway between the rich and lean settings.

4. After the idle mixture has been adjusted, hold governor lever so throttle lever is in idle position (against idle stop screw) and readjust idle stop screw to bring speed to 1200± 50 rpm.

5. With governor control lever in governed idle position (no tension on high speed spring) bend governed idle spring anchor tang to attain governed idle speed of 1400± 50 rpm.

6. Move throttle control to FAST position. Bend high speed spring anchor tang to attain high speed of 2800 + 50 −100 rpm.

REPLACING SPARK PLUGS (Fig. 37)

Replace spark plugs after every 800 operating hours. Recommended air gap is 0.030".
Correct spark plug to use is a Champion RC 12YC.

Note: The spark plug usually lasts a long time; however, the plug should be removed and checked whenever the engine malfunctions.

1. Clean area around spark plugs so foreign matter cannot fall into cylinder when spark plug is removed.

2. Pull spark plug wires off spark plugs and remove plugs from cylinder head.

3. Check condition of side electrode, center electrode, and center electrode insulator to assure there is no damage.

IMPORTANT: A cracked, fouled, dirty or otherwise malfunctioning spark plug must be replaced. Do not sand blast, scrape, or clean electrodes by using a wire brush because grit may eventually release from the plug and fall into the cylinder. The result is usually a damaged engine.

4. Set air gap between center and side of electrodes at 0.030". Install correctly gapped spark plug w/gasket seal, and tighten plug to 200 in−lb. If torque wrench is not used, tighten plug firmly.

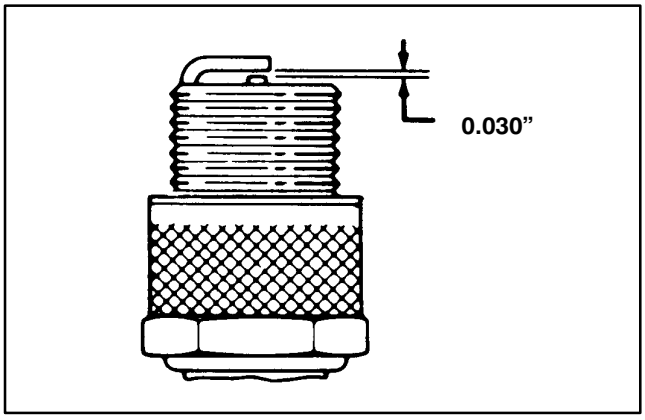

Figure 37

FUEL FILTER REPLACEMENT (Fig. 38)

An in−line filter is incorporated into the fuel line between the fuel tank and carburetor. Replace the filter every 800 hours or sooner if fuel flow is restricted. Be sure the arrow on the filter is pointing away from the fuel tank.

CAUTION

Since gasoline is highly flammable, drain it outdoors and make sure engine is cool to prevent a potential fire hazard. Wipe up any gasoline that may have spilled. Do not drain gasoline near any open flame or where gasoline fumes may be ignited by a spark. Do not smoke a cigar, cigarette, or a pipe when handling gasoline.

1. Close fuel shut off valve, loosen the hose clamp on the carburetor side of filter and remove the fuel line from the filter.

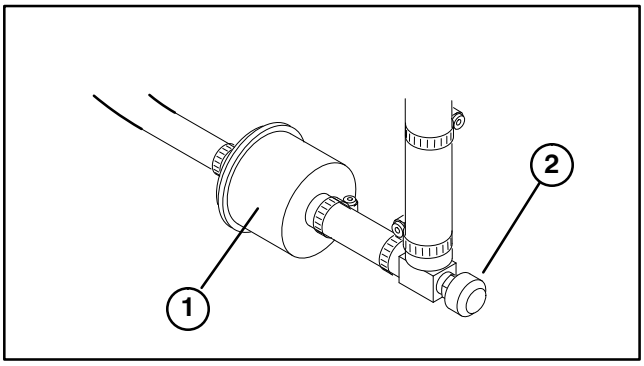

Figure 38
1. **Fuel filter**
2. **Shut off valve**

2. Place a drain pan under filter, loosen the remaining hose clamp and remove filter.

3. Install the new filter with arrow on the filter body pointing away from the fuel tank.

CHANGING HYDRAULIC OIL AND FILTER (Fig. 39 & 40)

Normally, change hydraulic oil and filter after every 2000 operating hours. If oil becomes contaminated, contact your local TORO distributor because the system must be flushed. Contaminated oil looks milky or black when compared to clean oil.

1. Remove drain plug from reservoir and let hydraulic oil flow into drain pan. Reinstall and tighten plug when hydraulic oil stops draining.

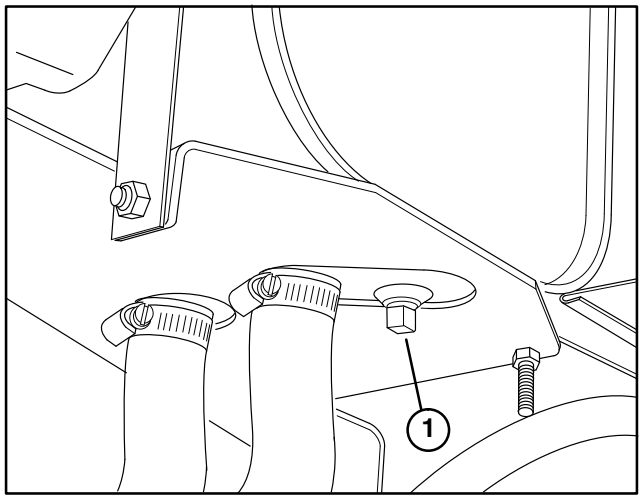

Figure 39
1. Hydraulic Reservoir Drain Plug

2. Clean area around filter mounting area. Place drain pan under filter and remove filter.

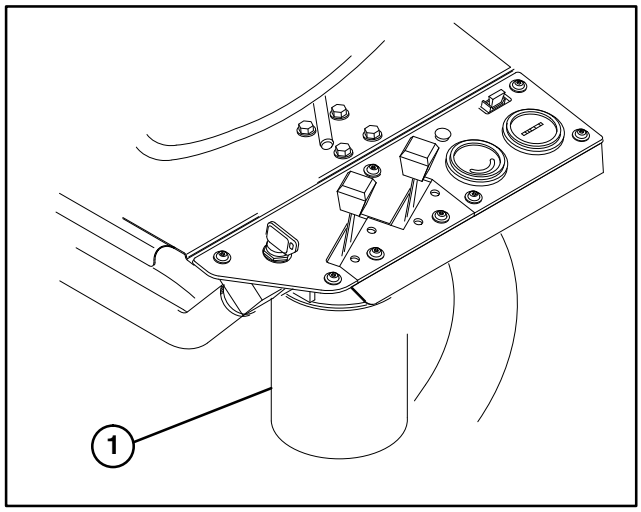

Figure 40
1. Hydraulic Filter

3. Fill the replacement filter with Mobil 424 hydraulic fluid, lubricate the sealing gasket and hand turn until gasket contacts filter head. Then tighten 3/4 turn further. Filter should now be sealed.

4. Fill hydraulic tank with approximately 4.5 gallons of hydraulic oil. Refer to CHECK HYDRAULIC SYSTEM.

5. Start the machine and run it at idle for 3 to 5 minutes to circulate the fluid and remove any air trapped in the system. Stop the machine and recheck the fluid level.

6. Dispose of oil properly.

CHECKING HYDRAULIC LINES AND HOSES

Check hydraulic lines and hoses daily for leaks, kinked lines, loose mounting supports, wear, loose fittings, weather deterioration and chemical deterioration. Make all necessary repairs before operating.

WARNING

Keep body and hands away from pin hole leaks or nozzles that eject high pressure hydraulic fluid. Use cardboard or paper to find hydraulic leaks. Hydraulic fluid escaping under pressure can penetrate skin and cause injury. Fluid accidentally injected into the skin must be surgically removed within a few hours by a doctor familiar with this form of injury or gangrene may result.

BRAKE ADJUSTMENT (Fig. 41)

A brake adjustment rod is located on each side of the Greensmaster 3050 so the brakes can be equally adjusted. Adjust the brakes as follows:

1. Transport the Greensmaster 3050 and depress the brake pedal; both wheels should lock equally.

CAUTION

As a safety precaution, always check brakes in a wide, open spaced, flat area which is free of other persons and obstructions before and after adjustment.

2. If the brakes do not lock equally, disconnect the brake rods by removing cotter pin and clevis pin.

3. Loosen jam nut and adjust clevis accordingly.

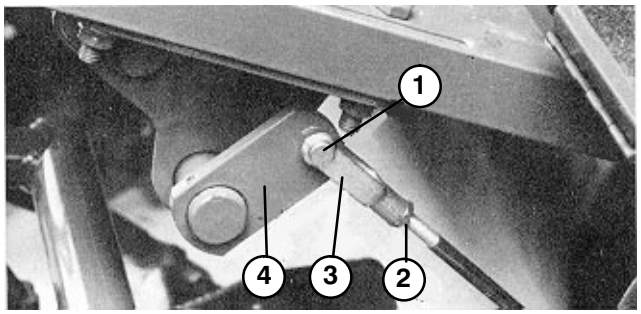

Figure 41
1. Clevis pin & cotter pin
2. Jam nut
3. Clevis
4. Brake shaft

4. Assemble clevis to brake shaft.

5. Check the amount of free travel of the brake pedal when adjustment is completed. There should be 1/2 in. to 1 in. travel before the brake shoes make contact with the brake drums. Re−adjust, if necessary, to achieve this setting.

6. Transport the Greensmaster 3050 and depress the brake pedal; both brakes should lock equally. Readjust, if necessary.

7. It is recommended that brakes be burnished annually, refer to Break−In Period.

REAR CAMSHAFT ADJUSTMENT (Fig. 42)

A camshaft misaligned with the valve bank may cause the following:

A. No increase in ground speed in No. 2 (transport) traction selection.

B. Mow pedal will not stay depressed (in detent) without foot pressure.

C. Slow lift of the cutting units.

D. Slow or no drive to the cutting units.

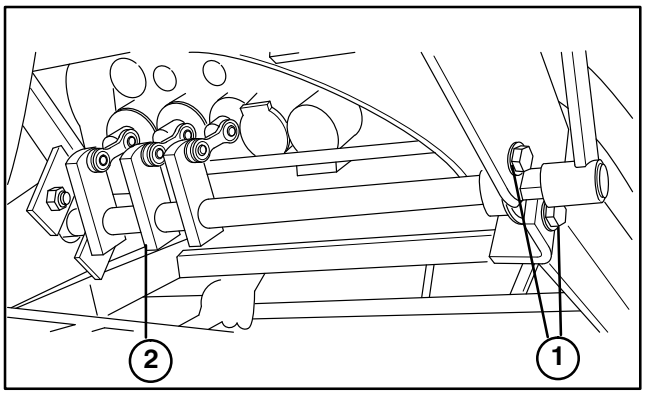

Figure 42
1. Mounting capscrews
2. Cam blocks

1. If one or more malfunctions occur, loosen the rear camshaft mounting capscrews and relocate the cam shaft until the condition is corrected.

2. Retighten the capscrews.

CAUTION

You must readjust the mow−lift switch when the camshaft adjustment is completed and the lift and mow pedal height.

ADJUSTING LIFT AND MOW PEDAL HEIGHT (Fig. 43−44)

Adjust the lift and mow pedal to equal height to gain proper spool travel in the valve bank as follows:

1. Place 1, 2 and 3 spools in neutral (center of travel) and remove transfer rod guard from foot panel.

2. Loosen jam nut securing yoke on front of long control rod, remove cotter pin and clevis pin.

3. Move adjustment lever by hand to level the mow and lift pedals and adjust yoke on control rod until hole in yoke lines up with the adjustment lever hole.

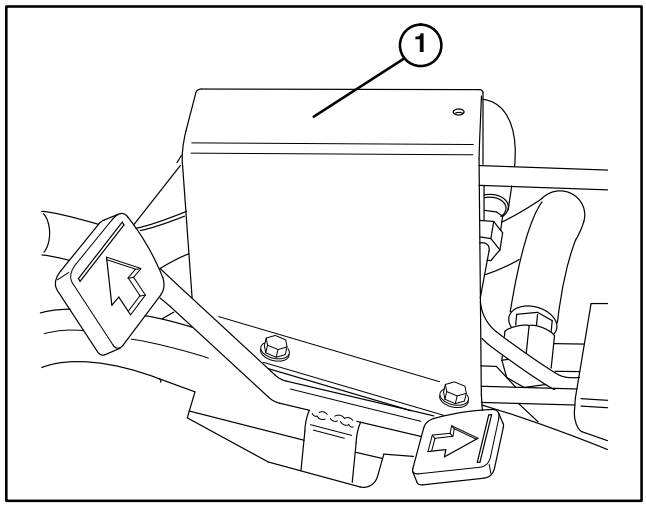

Figure 43
1. Transfer rod guard

4. Install the clevis pin and cotter pin. Tighten the jam nut and install the transfer rod guard.

5. Actuate the mow pedal by hand. Be sure the lift pivot under the pedals clears the stop welded to the frame, thereby allowing full spool travel.

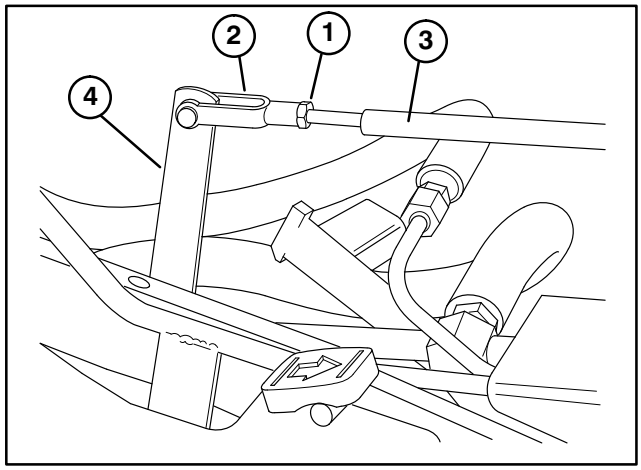

Figure 44
1. Jam nut
2. Yoke
3. Control rod
4. Adjustment lever

LEVELING LIFT AND MOW PEDALS

(Fig. 45)

If lift and mow pedals are not level when in the neutral position, an adjustment to the lift pivot is required.

1. Loosen nut on back side of lift pivot.

2. Rotate eccentric screw to raise or lower lift pivot spring, leveling lift pivot and pedals.

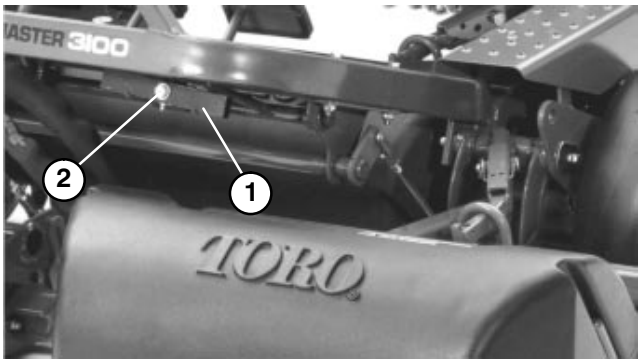

Figure 45
1. Lift Pivot **2. Eccentric Screw**

3. While holding screw, tighten nut locking adjustment.

ADJUSTING TRACTION PEDAL (Fig. 46)

To check forward and reverse operation of traction pedal proceed as follows:

Forward

1. Press traction pedal fully forward until No. 5 section, valve spool is completely pulled out.

2. Pedal should contact pedal stop. If pedal contacts stop before spool is completely out, or if pedal does not make contact with stop, an adjustment to the stop is necessary.

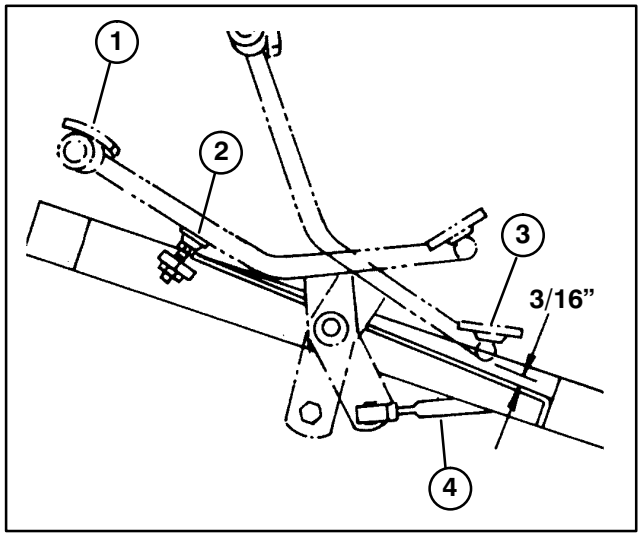

Figure 46
1. Fully forward **3. Reverse**
2. Pedal stop **4. Control rod**

3. Loosen hex nut securing threaded rod to frame. Turn flange nut on rod to raise or lower stop (rod), while checking pedal.

4. When completed, retighten nut.

Reverse

1. Press down on rear of traction pedal (reverse) until No. 5 section, spool valve is completely pushed in.

2. Check distance between bottom of pedal and footrest as shown in Fig. 46. Distance should be approximately 3/16". If distance is greater or less than 3/16" dimension, an adjustment to the traction control rod is required.

3. Remove jam nut and ball joint securing control rod to traction shaft pivot.

4. Loosen jamnuts securing ball joints to control rod and adjust ball joints and control rod to attain 3/16" dimension when reinstalled.

ADJUSTING CUTTING UNIT LIFT/DROP

(Flg. 47)

1. The machines cutting unit lift/drop circuit is equipped with a flow control valve. This valve is pre−set at the factory at approximately 3−1/2 turns open, but an adjustment may be required to compensate for differences in hydraulic oil temperatures, mowing speeds, etc. If an adjustment is required proceed as follows:

Note: Allow hydraulic oil to reach full operating temperature before adjusting flow control valve.

2. Raise seat and locate flow control valve mounted to main control valve.

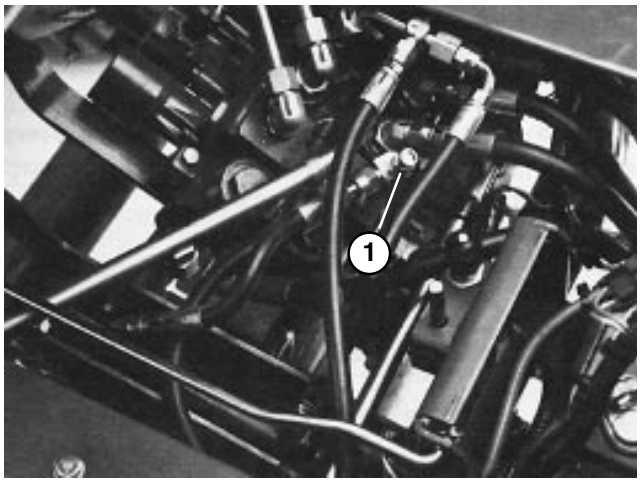

Figure 47
1. Flow Control Valve

2. Loosen jam nut, retaining adjusting knob on flow control. **When loosening jam nut, hold flow control knob to prevent it from rotating.**

3. Rotate knob 1/4 turn counterclockwise, if center cutting unit is dropping too late or 1/4 turn clockwise if center cutting unit is dropping to early.

4. After desired setting has be achieved, hold knob to prevent any rotation and tighten jam nut.

ADJUSTING LIFT CYLINDERS

To regulate the height of the front cutting units, when in the raised (transport) position, the front lift cylinders may be adjusted.

1. Lower cutting units to the floor.

2. Loosen jam nut, on clevis, of cutting unit lift cylinder to be adjusted.

3. Disconnect cylinder clevis from lift arm.

4. Rotate clevis until desired height is attained.

5. Connect cylinder clevis to lift arm and tighten jam nut.

SEAT SWITCH MAINTENANCE (Fig. 48)

1. Pivot seat forward and secure it with support rod to prevent it from falling accidentally and possibly causing injury.

2. Remove boot from button end of seat switch and retain for installation on replacement switch. Unplug switch connectors.

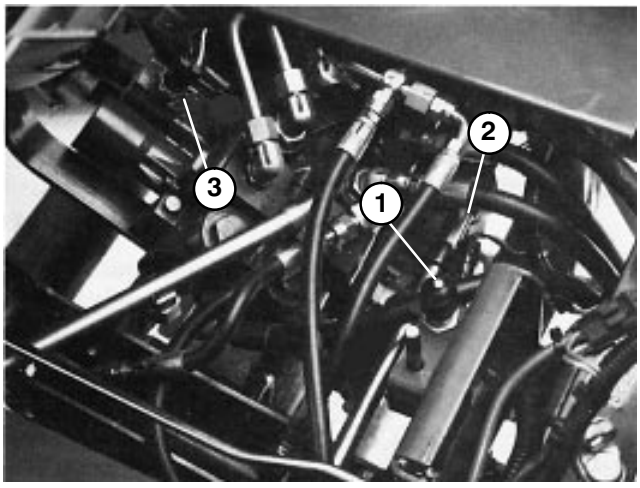

Figure 48
1. Traction switch **3. Mow/lift switch**
2. Seat switch

3. Loosen the jam nut and unscrew the switch from mounting bracket.

4. Screw new switch through mounting bracket until switch button is about 1/16 inch shorter than the top of the seat return spring pin. Install the boot into the mount grooves.

5. Carefully release the seat to its normally down position, but do not sit or apply force on the seat. There should be a slight gap between the switch and the seat plate.

6. Lock switch in place by tightening the jam nut to 75 in.−lb against the mounting bracket.

IMPORTANT: Switch threads will be damaged if the jam nut is over−tightened.

7. Connect continuity tester of ohm meter to switch terminals. With seat in the down position and no one on the seat, the switch circuit should not have continuity. If there is continuity, repeat steps 4−6. If there is no continuity, proceed to step 8.

8. Sit on the seat. The seat switch should have continuity. If there is no continuity, repeat steps 4−7. If there is continuity proceed to step 9.

9. Plug switch connectors together.

TRACTION SWITCH MAINTENANCE (Fig. 48)

1. Pivot seat forward and secure it with support rod to prevent it from falling accidentally and possibly causing injury.

2. Unplug switch connectors from traction switch installed in valve bank bonnet on selector valve section.

3. Loosen the jam nut and unscrew the switch from the mounting bracket.

4. Move shift selector to Neutral.

5. Partially screw new switch into bonnet.

6. Connect a continuity tester or ohm meter to the switch terminals and continue to turn the switch in until there is continuity. Then rotate switch in 1/2 turn (180 degrees).

7. Secure jam nut to 75 in.−lb. against the bonnet.

IMPORTANT: Switch threads will be damaged **if** the jam nut is over−tightened.

8. Connect continuity tester or ohm meter to switch terminals and move shift selector to the #1 and #2 positions. There should not be continuity when shift selector is in either of these positions. If there is continuity, repeat steps 5 and 6.

9. Move the shift selector lever to Neutral and connect continuity tester or ohm meter to switch terminals. The switch should show continuity. This means the switch is operating correctly.

10. Plug switch connectors together.

MAINTENANCE

MOW/LIFT SWITCH MAINTENANCE

(Fig. 48)

IMPORTANT: Spool travel for 1, 2 and 3 spools must be correct before Mow/Lift switch can be adjusted. Refer to Rear Camshaft Adjustment.

1. Pivot seat forward and secure it with support rod to prevent it from falling accidentally and possibly causing injury.

2. Unplug switch connectors from end of mow/lift switch installed in the valve bank bonnet.

3. Loosen jam nut and unscrew switch from valve bank bonnet.

4. While holding lift pedal in fully depressed position (valve bank spools fully IN) partially screw new switch into bonnet.

5. Connect continuity tester on ohm meter across switch terminals and turn switch in until continuity occurs. Then rotate switch in 1/2 turn (180 degrees) and secure jam nut to 75 in.–lb. against the bonnet.

IMPORTANT: Switch threads will be damaged if the jam nut is over–tightened.

6. Connect continuity tester or ohm meter to switch terminals and depress the mow pedal.

There should not be continuity. If there is continuity, repeat step 4. Proceed to step 7 if there is no continuity.

7. Depress the lift pedal and release it (neutral position). The switch circuit should have continuity.

8. Plug switch connectors together.

ADJUSTING TRACTION RETURN LINKAGE (Fig. 49)

If shift selector lever does not return to Neutral or #1 position from #2 position when mow pedal is engaged, an adjustment to the traction return linkage is required.

1. Loosen front jam nut securing cable assembly to mow/lift control rod bracket.

2. Move shift lever to #1 position.

3. While holding mow/lift control rod in rear position, tighten rear locknut to remove almost all slack from cable assembly. Do not over–tension cable.

4. Tighten front jam nut to lock adjustment.

5. Check operation and re–adjust as required.

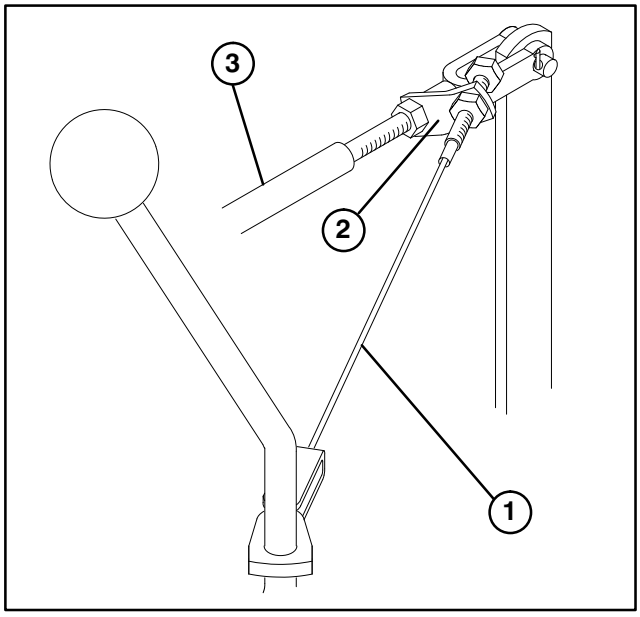

Figure 49

1. Cable assembly
2. Mow/lift control rod bracket
3. Mow/lift control rod

SERVICING STEERING ASSEMBLY

(Fig. 50 & 51)

Steering cable tension should be adjusted whenever play is felt in the steering wheel. A loose steering cable will make it difficult to steer in a straight line. however, over tightening cable will cause undue wear to pulleys and cause cable to stretch and fail prematurely. When properly tensioned, cable should deflect 1/2" at mid span when 11 lbs. of force is applied.

1. Tension cable by securing cable end hex with an open end wrench and turning the nut on the cable end with another wrench.

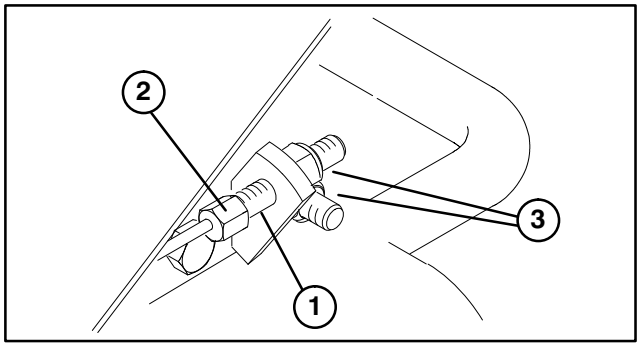

Figure 50

1. Steering cable
2. Hold with wrench
3. Turn to remove slack

2. If all threads on the cable end have been used, replace cables. If necessary, service the pulley and steering cable under the steering wheel by removing the cover on the end of the steering column

MAINTENANCE

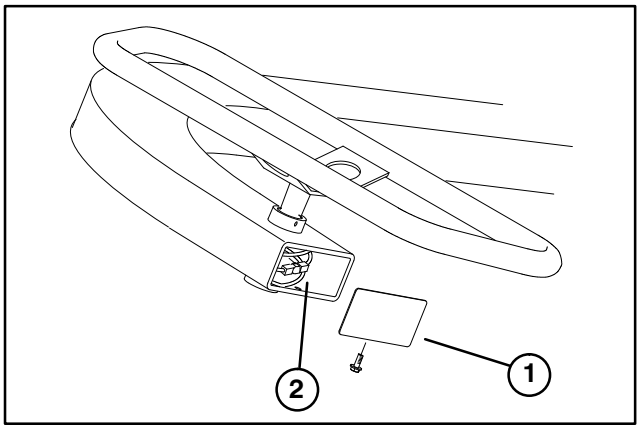

Figure 51

1. **Cover**
2. **Pulley and steering cable**

BATTERY CARE

1. Battery electrolyte level must be properly maintained and the top of the battery kept clean. If the Greensmaster 3050 is stored in a location where temperatures are extremely high, the battery will run down more rapidly than if the machine is stored in a location where temperatures are cool.

CAUTION

Since the gasses from the battery and the gasoline fumes are explosive, keep open flame and electrical spark away from the area; do not smoke.

2. Check the electrolyte level every 50 operating hours or, if machine is in storage, every 30 days.

3. Maintain cell level with distilled or demineralized water. Do not fill cells above the bottom of the split ring inside each cell.

4. Keep top of battery clean by washing periodically with a brush dipped in ammonia or bicarbonate of soda solution. Flush the top surface with water after cleaning. Do not remove the fill caps while cleaning.

5. Battery cables must be tight on terminals to provide good electrical contact.

6. If corrosion occurs at terminals, disconnect cables, negative (−) cable first and scrape clamps and terminals separately. Reconnect cables, positive (+) cable first and coat terminals with petroleum jelly.

MAINTENANCE SCHEDULE

Minimum Recommended Maintenance Intervals

Maintenance Procedure	Maintenance Interval & Service			
	Every 50 hrs	Every 100hrs	Every 200hrs	Every 800hrs
Check Battery Fluid Level				
Check Battery Cable Connections				
Service Air Filter Pre−Cleaner				
Lubricate All Grease Fittings				
† Change Engine Oil				
† Replace Engine Oil Filter				
Replace Air Filter Element				
Check Reel Bearing Preload Adjustment				
Torque Wheel Lug Nuts				
Replace Spark Plugs				
Replace Fuel Filter				
Check Engine RPM (idle and full throttle)				
Check Valve Clearance				

† Initial break in at 8 hours

Replace Moving Hoses Replace Safety Switches Fuel Tank − Drain/Flush Hydraulic Tank − Drain/Flush Replace Hydraulic Oil and Filter	**Annual Recommendations:** Items listed are recommended every 2000 hours or 2 years, whichever occurs first.

ELECTRICAL SCHEMATIC

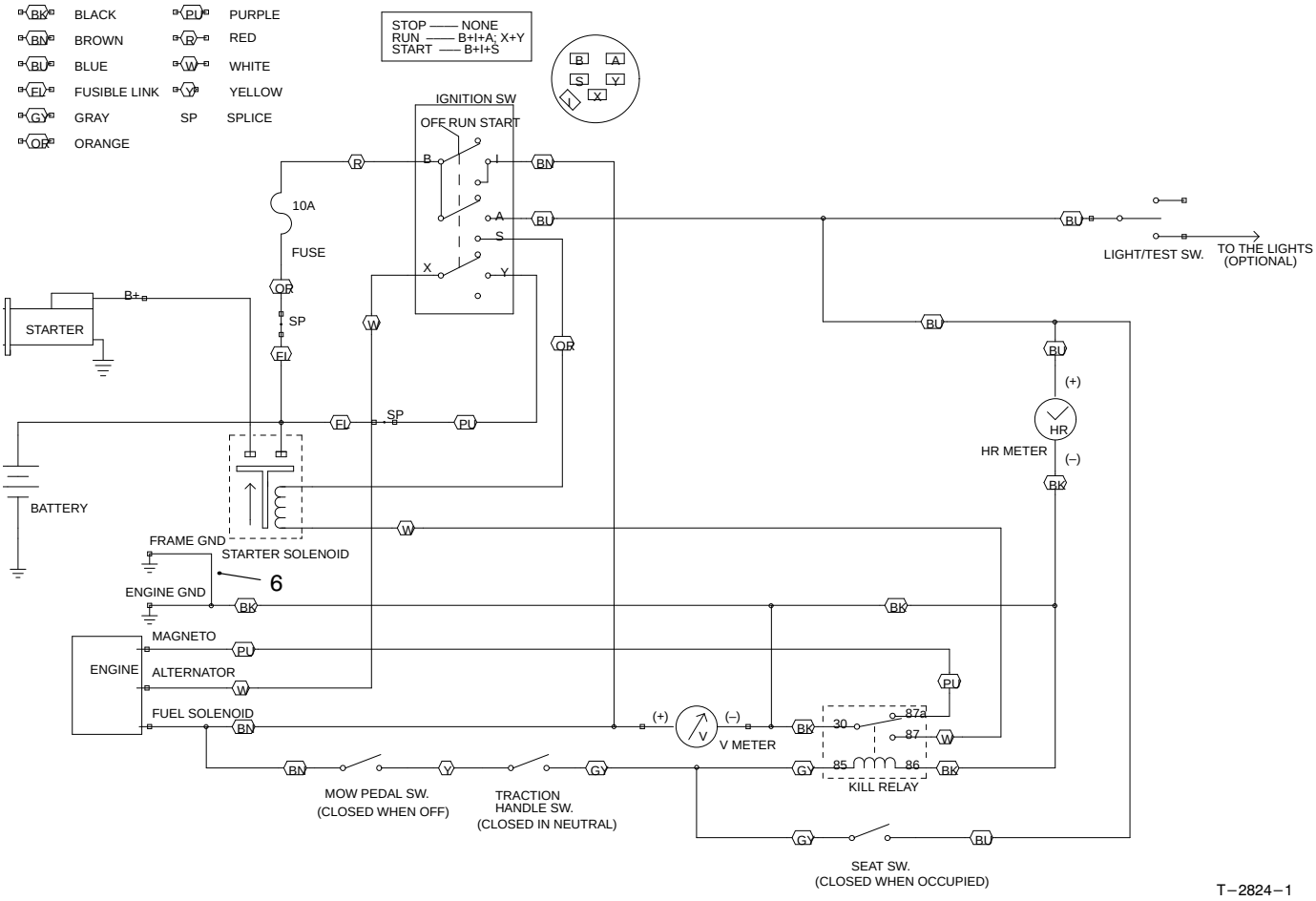

HYDRAULIC SCHEMATIC

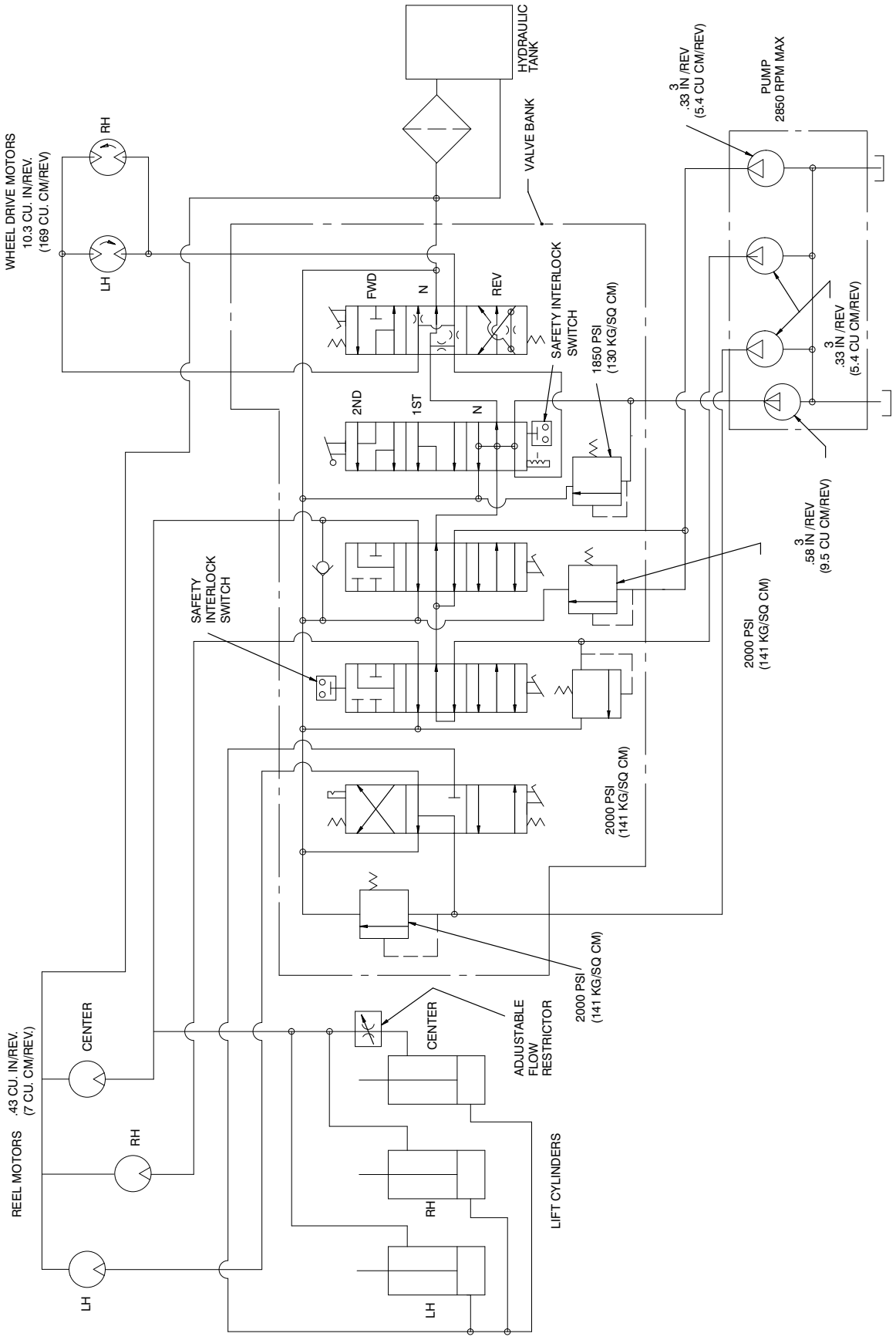

TROUBLE SHOOTING

CONDITION	CAUSE	CORRECTION
ENGINE: **1**. Loss of power	• Out of fuel. • Clogged fuel line — debris in fuel tank. • Clogged fuel filter. • Low crankcase oil level. • Wrong oil in crankcase. • Carburetor fuel solenoid • Throttle cable set incorrectly. • Choke closed. • Plugged air cleaner element. • Carburetor malfunction. • Ignition malfunction • Cooling fins plugged with debris. Engine overheating. • Internal engine malfunction • Engine−pump coupling loose. • Hydraulic system malfunction.	• Re−fill fuel tank. • Clean fuel tank. Use clean gasoline. • Replace filter. • Add oil to proper level. Check level more frequently. • Replace with correct oil. • Check solenoid and wiring • Repair as necessary. • Readjust. • Replace element. Service morefrequently. • Repair as necessary. • Repair as necessary. • Clean fins. Repair engine as necessary. • Repair as necessary. • Repair or replace. • Refer to Hydraulic Trouble Shooting, (See below).
2. Engine won't start.	• Faulty ignition system. • No fuel. • Defective starter system. • Carburetor fuel solenoid.	• Repair as necessary • Check fuel level. Add gasoline to tank. • Check connections, solenoid, startermotor, ignition switch. • Check solenoid and wiring.
HYDRAULIC: **1.** No ground speed increase in #2 selection.	• Maladjusted control lever. • Maladjusted rear camshaft. • Mow−lift linkage binding or broken lift pivot spring. • Wrong detent parts in #4 spool. • #2 or #3 spool relief valves stuck open. (Reel drive RPM will also be low on #1 or #3 cutting unit).	• Adjust. Refer to Traction Switch Adjustment. • Adjust by moving R.H. end of rear camshaft forward or L.H. end rear−ward. • Lubricate or repair machine. • Remove valve bank & repair #4 spool assembly. • Remove, and repair or replace relief cartridge.
2. No #1 or Reverse Traction speed. Normal #2 speed.	• Defective or missing disc seal between #3 or #4 valve sections. • Poppet inside #4 spool stuck open. Off seat. • Open traction relief cartridge in #4 spool section.	• Remove valve bank. Replace disc seal. • Remove valve bank. Repair #4 spool section. • Remove relief cartridge. Repair or replace.

TROUBLE SHOOTING

CONDITION	CAUSE	CORRECTION
3. No #1 or Reverse Traction speed. Normal #2 speed.	• Traction motor lacks efficiency. Fluid leaking past internal gears. • Hydraulic pump lacks efficiency. Fluid leaking past internal gears.	• Test to identify faulty motor. Repair or replace motor. • Test to verify diagnosis. Repair or replace pump.
4. Slow or no traction in all selections.	• Brakes dragging. • Faulty O−ring seals around traction relief cartridge or inlet sleeve in #4 spool valve. Fluid leaking by to tank. • Worn or weak traction motor(s). • Pump excessively worn. • Traction relief in #4 spool valve open.	• Determine cause & repair. • Remove relief and inlet sleeve. Replace 0−rings. • Test to verify. Repair or replace motor(s). • Test to verify. Repair or replace. • Remove, repair or replace.
5. Slow or no traction in all selections. (Reels affected)	• Low oil level in reservoir. • Loose shift lever bracket. • Maladjusted rear camshaft. • Engine lacks power.	• Add oil to proper level. • Readjust & tighten shift lever. • Readjust. • Repair as necessary.
6. Binding shift lever	• Lack of lubrication in #4 spool detent assembly.	• Remove valve bank. Dissassemble detent assembly & repair.
7. All 3 cutting units raise and lower too slowly.	• Binding lift cylinders & linkages. (lack of lubrication).	• Lubricate more frequently.
8. Center cutting (#1) unit dropping too late or too early.	• Maladjusted flow control valve.	• Readjust.
9. Front cutting units too high or too low when in raised (transport) position.	• Maladjusted front lift cylinders.	• Readjust.
10. Cutting units lift too slowly.	• Rear camshaft maladjusted. • #2 spool travel restricted by mow− lift switch. • Lift check poppet in #1 spool section stuck partially closed.	• Readjust. • Readjust switch. • Remove lift check. Repair or replace.
11. Cutting units drop during transport (between greens)	• Internal lift cylinder leak. • Lift check plug seals in #1 spool body defective. • Detent stud loose in #1 spool. • #1 spool loose in valve body. Fluid bypassing.	• Raise units & block them up. Remove lines from brazed tube & remove blocks. Line which leaks fluid is attached to bad cylinder. Repair cylinder. • Remove lift check plugs. Replace 0−ring assemblies. • Remove adjustment cap from #1 spool bonnet. Retighten stud with screwdriver. • Replace spool valve assembly.

TROUBLE SHOOTING

CONDITION	CAUSE	CORRECTION
12. Cutting units drop while machine is stored. (Overnight)	• Normal condition.	• No repair necessary.
13. One or more cutting units slow or no reel drive action.	• Bed knife to reel adjustment too tight. • Tight reel bearings. • Rear camshaft maladjusted. • Poppet in relief cartridge off seat. • Improper suction line(s) installed. Line collapsed. • Blockage in line fitting. • Excessively worn motor. • Slow reel rpm — No. 1 C.U. • Excessively worn pump. • Spool loose in valve body. Fluid leak past spool. • Steel pressure line damaged. Flow restricted. (Front cutting units only). • Low fluid level. (Will affect total machine performance).	• Readjust per instructions in Operator's Manual for cutting unit. • Repair as necessary. • Readjust. • Remove and repair or replace relief cartridge. • Remove. Use genuine TORO parts only. • Repair as necessary. • Test to verify. Repair or replace motor. • Check lift cylinders for internal leakage. Repair or replace. • Test to verify. Repair or replace. • Replace spool valve assembly. • Replace line. • Add fluid.
14. Center cutting unit (#1) reel operates in raised position.	• Rear camshaft maladjusted. #3 spool too far out of body. • Restriction in brazed tube assembly on #3 spool section. • Restriction in valve return port between #3 spool section and R.H. cover.	• Readjust camshaft. • Remove restriction. • Disassemble cover & remove restriction.
15. Reel drive pressure lines pulsates during operation.	• Normal condition. Will vary from line to line.	• No repair necessary.
16. Mow pedal won't stay down unless it is held down with foot. (#1 spool not in "detent").	• Rear camshaft maladjusted. • Defective #1 spool detent.	• Readjust camshaft. • Remove and repair.
ELECTRICAL: **1**. Engine starts (but should not) when shift selector is in gear.	• Traction switch adjusted incorrectly or is defective.	• Refer toTraction Switch Maintenance.
2. Engine starts (but should not) when mow pedal is depressed (reels engaged).	• Mow/lift switch adjusted incorrectly or is defective.	• Refer to Mow/Lift Switch Maintenance.
3. Engine starts (but should not) when operator is not on seat.	• Seat switch adjusted incorrectly or is defective.	• Refer to Seat Switch Maintenance,.

TROUBLE SHOOTING

CONDITION	CAUSE	CORRECTION
4. Engine fails to crank, regardless of shift selector or mow pedal position.	• Mow/lift switch, Traction switch and/or seat switch adjusted incorrectly or are defective. • Battery terminals corroded. • Mow/lift or traction switch wires are loose. • Battery is dead. • Solenoid is defective. • Ignition switch is defective. • Starter is defective. • Engine is seized. • Key Switch, Ammeter, or Solenoid wires loose. • Operator must be on seat.	• Refer toTraction Switch Maintenance • Refer to Mow/Lift Switch Maintenance,. • Refer to Seat Switch Maintenance. • Clean terminals. • Check wires and connect them properly. • Charge or replace battery. • Replace solenoid. • Replace ignition switch. • Replace or repair starter. • Repair engine. • Connect wires. • Sit on seat
5. Engine cranks but does not start when shift selector and mow pedal are in neutral.	• The cause of this problem is unrelated to interlock wiring system. • Rear camshaft maladjusted. • Engine or rectifier plug loose. • " I " terminal wire of key switch loose. • Engine trouble or out of gas.	• All interlock switches are OK; therefore, proceed to next cause. • Refer to Rear Camshaft Adjustment • Connect wire. • Connect wire. • Determine problem and correct.
6. Engine does not stop when mow pedal is depressed (reels engaged) as you get off the seat.	• Mow/lift or seat switch adjusted incorrectly or are defective. • Seat return pin spring broken, missing or jammed down. • Seat pivot fails to rotate freely.	• Refer to Mow/Lift Switch Maintenance. • Refer to Seat Switch Maintenance. • Replace, loosen and lubricate parts so pin operates freely. • Loosen and lubricate seat pivot pin to assure free movement.
7. Engine does not stop when shift selector is in gear as you get off the seat.	• Traction or seat switch adjusted incorrectly or are defective. • Seat return pin spring broken, missing or jammed down. • Seat pivot fails to rotate freely.	• Refer to Traction Switch Maintenance. • Refer to Seat Switch Maintenance. • Replace, loosen and lubricate parts so pin operates freely. • Loosen and lubricate seat pivot pin to assure free movement.
8. Engine does not continue to run when sitting on seat and shift selector is placed in gear or mow pedal is depressed.	• Seat switch adjusted incorrectly or is defective. • Seat return pin spring jammed in up position.	• Refer to Seat Switch Maintenance. • Loosen and lubricate jammed parts so pin operates freely. Replace spring if defective.

TROUBLE SHOOTING

CONDITION	CAUSE	CORRECTION
9. Engine stops regardless of shift selector or mow pedal position (even if both are in “Neutral”) as you get off the seat.	• Mow/lift switch and/or Traction switch adjusted incorrectly or are defective. • Mow/lift and/or traction switchwires are loose. • Traction switch extension plugwires are loose. • “B” terminal wire of key switch is loose.	• Refer to Switch Maintenance. • Connect wires. • Connect wires. • Connect wire.
10. Engine seems to “cut−out” too much during transport. Note: Some “cut−out” is normal.	• Seat is lifting off seat switch button too easily.	• Adjust seat switch: refer to Seat Switch Maintenance. • Instruct operator to sit back in seat during transport.
11. Engine does not stop when ignition key is rotated to OFF position.	• Connector off ignition switch. • Ignition switch is defective. • Wires in connector have shorted. • Engine timing or carburetor adjustment is incorrect.	• Push connector onto ignition switch terminals. • Replace ignition switch. • Repair affected wires. • Adjust carburetor or engine timing.
12. Battery does not charge.	• Defective or missing fuse. • Loose wire(s) in electrical system. • Defective regulator or engine charging circuit.	• Install new fuse. • Check all connections and make all necessary repairs. • Install new regulator or repair engine charging circuit.

STORAGE

If you wish to store the GREENSMASTER 3050 for a long period of time, the following steps should be accomplished prior to storage:

1. Remove accumulations of dirt and old grass clippings. Sharpen reels and bedknives, if necessary: refer to Cutting Unit Operator's Manual. Use a rust preventive on bedknives and reel blades. Grease and oil all lubrication points: refer to Lubrication.

2. Block up wheels to remove tire weight.

3. Drain and replace hydraulic fluid and filter, inspect hydraulic lines and fittings. Replace, if necessary; refer to Changing Hydraulic Oil and Filter and Checking Hydraulic Lines and Hoses.

4. All fuel should be removed from fuel tank; run the engine until it stops from lack of fuel. The small amount of fuel that remains in the bottom of the tank should be removed by absorbing it with a clean dry cloth. Replace fuel filter; refer to Fuel Filter Replacement.

5. While engine is still warm, drain oil from crankcase. Refill with fresh oil; refer to Changing Engine OIL and Filter.

6. Remove spark plugs, pour 1 ounce of SAE 30 oil into cylinders and crank slowly to distribute oil. Replace spark plugs; refer to Replacing Spark Plugs.

7. Clean dirt and chaff from cylinder, cylinder head fins and blower housing.

8. Remove the battery and charge it fully. Either store it on the shelf or on the machine. Leave the cables disconnected if stored on the machine. Store the battery in a cool atmosphere to avoid quick deterioration of the charge in the battery.

9. If possible, store in a warm, dry location.

IDENTIFICATION AND ORDERING

MODEL AND SERIAL NUMBERS

The GREENSMASTER 3050 has two identification numbers: a model number and a serial number. The two numbers are stamped on a plate which is riveted on the right inside of the footrest support. In any correspondence concerning the GREENSMASTER 3050, supply model and serial numbers to be sure that correct information and replacement parts are obtained.

To order replacement parts from an authorized TORO Distributor, supply the following information:

1. Model and serial numbers of the machine.

2. Part number, description and quantity of parts desired.

Note: Do not order by reference number if a parts catalog is being used; use the part number.

The Toro Commercial Products Two Year Limited Warranty

The Toro Company warrants your 1996 or newer Toro Commercial Product ("Product") purchased after January 1, 1997, to be free from defects in materials or workmanship for the period of time listed below. Where a warrantable condition exists, Toro will repair the Product at no cost to you including diagnosis, labor, parts, and transportation. This warranty begins on the date the Product is delivered to the original retail purchaser.

Warranty Duration: Two years or 1500 operational hours*, whichever occurs first.
***Product equipped with hour meter**

Owner Responsibilities:

As the Product owner, you are responsible for required maintenance and adjustments stated in your Owner's Manual. Failure to perform required maintenance and adjustments can be grounds for disallowing a warranty claim.

Instructions for Obtaining Warranty Service:

You are responsible for notifying the Commercial Products Distributor or Authorized Commercial Products Dealer from whom you purchased the Product as soon as you believe a warrantable condition exists.

If you need help locating a Commercial Products Distributor or Authorized Dealer, or if you have questions regarding your warranty rights or responsibilities, you may contact us at:

Toro Commercial Products Service Department
8111 Lyndale Avenue South
Minneapolis, MN, 55420–1196
Telephone: (612) 888–8801
Facsimile: (612) 887–8258
E–Mail: Commercial.Service@Toro.Com

Maintenance Parts:

Parts scheduled for replacement as required maintenance ("Maintenance Parts"), are warranted for the period of time up to the scheduled replacement time for that part.

Items/Conditions Not Covered:

Not all product failures or malfunctions that occur during the warranty period are defects in materials or workmanship. The items / conditions listed below are not covered by this warranty:

- Product failures which result from the use of non–Toro replacement parts, or from installation and use of add–on, modified, or unapproved accessories are not covered.
- Product failures which result from failure to perform required maintenance and/or adjustments are not covered.
- Product failures which result from operating the Product in an abusive, negligent or reckless manner are not covered.
- This warranty does not apply to parts subject to consumption through use unless found to be defective. Examples of parts which are consumed, or used up, during normal Product operation include, but are not limited to, blades, reels, bedknives, tines, spark plugs, castor wheels, tires, filters, belts, etc.
- This warranty does not apply to failures caused by outside influence. Items considered to be outside influence include, but are not limited to, weather, storage practices, contamination, use of unapproved coolants, lubricants, additives, or chemicals, etc.
- This warranty does not apply to normal "wear and tear" items. Normal "Wear and Tear" includes, but is not limited to, damage to seats due to wear or abrasion, worn painted surfaces, scratched decals or windows, etc.

Other Legal Disclaimers:

The above remedy of product defects through repair by an authorized distributor or dealer is the purchaser's sole remedy for any defect. This warranty gives you specific legal rights, and you may also have other rights which vary from state to state.

Except for the Emissions warranty referenced below, if applicable, there is no other express warranty. All implied warranties of merchantability and fitness for use are limited to the duration of the express warranty.

Some states do not allow limitations on how long an implied warranty lasts, so the above limitation may not apply to you.

The Toro Company is not liable for indirect, incidental or consequential damages in connection with the use of the Product, including any cost or expense of providing substitute Product or service during periods of malfunction or non–use.

Some states do not allow the exclusion of incidental or consequential damages, so the above exclusion may not apply to you.

Note to California residents: The Emissions Control System on your Product may be covered by a separate warranty meeting requirements established by the U.S. Environmental Protection Agency (EPA), or the California Air Resources Board (CARB). The hour limitations set forth above do not apply to the Emissions Control System Warranty. Refer to the California Emission Control Warranty Statement printed in your Owner's Manual or contained in the engine manufacturer's documentation for details.