Form No. 3409-244 Rev C

TORO®

Count on it.

Operator's Manual

Groundsmaster® 4500-D and 4700-D Traction Unit

Model No. 30881—Serial No. 400000000 and Up
Model No. 30882—Serial No. 400000000 and Up

Register at www.Toro.com.
Original Instructions (EN)

CE

3409-244 C

This product complies with all relevant European directives; for details, please see the separate product specific Declaration of Conformity (DOC) sheet.

⚠ WARNING

CALIFORNIA
Proposition 65 Warning

This product contains a chemical or chemicals known to the State of California to cause cancer, birth defects, or reproductive harm.

Diesel engine exhaust and some of its constituents are known to the State of California to cause cancer, birth defects, and other reproductive harm.

Genuine Toro spark arresters are approved by the USDA Forestry Service.

It is a violation of California Public Resource Code Section 4442 or 4443 to use or operate the engine on any forest-covered, brush-covered, or grass-covered land unless the engine is equipped with a spark arrester, as defined in Section 4442, maintained in effective working order or the engine is constructed, equipped, and maintained for the prevention of fire.

This spark ignition system complies with Canadian ICES-002.

Please refer to the engine manufacturer's information included with the machine

Introduction

This machine is a ride-on, rotary-blade lawn mower intended to be used by professional, hired operators in commercial applications. It is primarily designed for cutting grass on well-maintained lawns in parks, golf courses, sports fields, and on commercial grounds. It is not designed for cutting brush, mowing grass and other growth alongside highways, or for agricultural uses.

Read this information carefully to learn how to operate and maintain your product properly and to avoid injury and product damage. You are responsible for operating the product properly and safely.

You may contact Toro directly at www.Toro.com for product safety and operation training materials, accessory information, help finding a dealer, or to register your product.

Whenever you need service, genuine Toro parts, or additional information, contact an Authorized Service Dealer or Toro Customer Service and have the model and serial numbers of your product ready. Figure 1 identifies the location of the model and serial numbers on the right front frame member of the product. Write the numbers in the space provided.

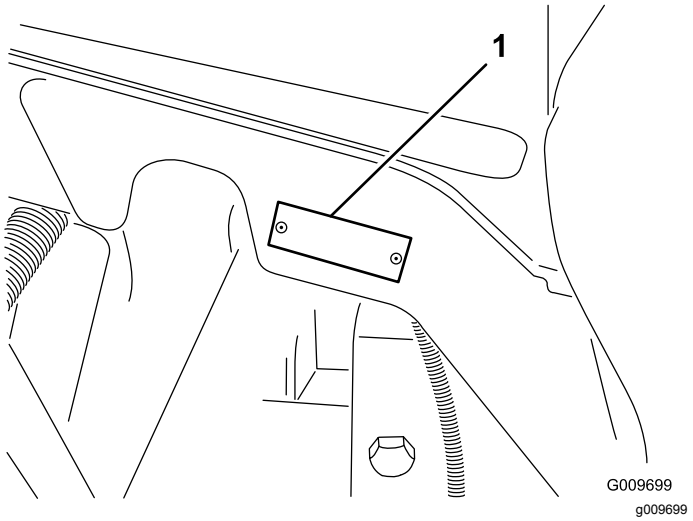

Figure 1

1. Model and serial number location

Model No. _____

Serial No. _____

This manual identifies potential hazards and has safety messages identified by the safety-alert symbol (Figure 2), which signals a hazard that may cause serious injury or death if you do not follow the recommended precautions.



Figure 2

1. Safety-alert symbol.

This manual uses 2 words to highlight information. **Important** calls attention to special mechanical information and **Note** emphasizes general information worthy of special attention.

© 2017—The Toro® Company

All Rights Reserved

Contents

Safety 4
General Safety 4
Engine Emission Certification 4
Safety and Instructional Decals 5
Setup 11
1 Replacing the Warning Decal (CE Machines Only) 11
2 Installing the Hood Latch (CE Machines Only) 11
3 Adjusting the Roller Scraper (Optional) 13
4 Installing the Mulching Baffle (Optional) 14
5 Preparing the Machine 14
Product Overview 15
Controls 15
Specifications 23
Machine Specifications 24
Mower Deck Specifications 24
Attachments/Accessories 24
Before Operation 25
Before Operation Safety 25
Checking the Engine-Oil Level 25
Checking the Cooling System 25
Checking the Hydraulic System 25
Draining the Water Separator 25
Checking the Rear Axle and Gearbox for Leaks 25
Filling the Fuel Tank 26
Checking the Tire Pressure 27
Checking the Torque of the Wheel-Lug Nuts 28
Adjusting the Rollover Protection System (ROPS) 28
Adjusting the Height of Cut 29
Checking the Interlock Switches 30
Checking the Blade-Stopping Time 31
Selecting a Blade 31
Choosing Accessories 31
During Operation 33
During Operation Safety 33
Starting the Engine 34
Shutting Off the Engine 34
Cutting Grass with the Machine 34
Diesel Particulate Filter Regeneration 35
Understanding the Operating Characteristics of the Machine 43
Operating the Engine-Cooling Fan 43
Using Cruise Control 44
Using the Transport Latches 44
Operating Tips 44
After Operation 46
After Operation Safety 46
Hauling the Machine 46
Pushing or Towing the Machine 46
Locating the Tie-Down Points 47
Maintenance 48
Recommended Maintenance Schedule(s) 48
Daily Maintenance Checklist 49
Service Interval Chart 50
Pre-Maintenance Procedures 51
Pre-Maintenance Safety 51
Preparing the Machine for Maintenance 51
Lifting the Machine 51
Opening the Hood 52
Accessing the Hydraulic Lift Compartment 52
Lubrication 53
Greasing the Bearings and Bushings 53
Engine Maintenance 54
Engine Safety 54
Servicing the Air Cleaner 54
Servicing the Engine Oil 55
Servicing the Diesel-Oxidation Catalyst (DOC) and the Soot Filter 56
Fuel System Maintenance 57
Draining the Fuel Tank 57
Inspecting the Fuel Lines and Connections 57
Servicing the Water Separator 58
Servicing the Fuel Filter 58
Cleaning the Fuel-Pickup Tube Screen 59
Priming the Fuel System 59
Bleeding Air from the Injectors 60
Electrical System Maintenance 60
Electrical System Safety 60
Checking the Battery Condition 60
Charging and Connecting the Battery 60
Locating the Fuses 62
Drive System Maintenance 63
Checking for End-Play in the Planetary Drives 63
Checking the Planetary-Gear-Drive Oil 63
Changing the Planetary-Gear-Drive Oil 64
Checking the Rear Axle and Gearbox for Leaks 64
Checking the Rear-Axle Lubricant 64
Changing the Rear-Axle Lubricant 65
Checking the Rear-Axle-Gearbox Lubricant 65
Checking the Rear Wheel Toe-In 66
Cooling System Maintenance 67
Cooling System Safety 67
Checking the Cooling System 67
Cleaning the Cooling System 67
Brake Maintenance 68
Adjusting the Service Brakes 68
Belt Maintenance 69
Servicing the Alternator Belt 69
Hydraulic System Maintenance 69
Hydraulic System Safety 69
Checking the Hydraulic-Fluid Level 69

Changing the Hydraulic Fluid 71
Replacing the Hydraulic Filters 71
Checking the Hydraulic Lines and Hoses 72
Mower Deck Maintenance 73
Removing the Mower Decks 73
Installing the Mower Decks 73
Servicing the Front Roller 73
Blade Maintenance 74
Blade Safety 74
Servicing the Blade Plane 74
Removing and Installing the Mower Blade(s) 75
Inspecting and Sharpening the Mower Blade(s) 76
Storage 77
Preparing for Seasonal Storage 77

Safety

This machine has been designed in accordance with EN ISO 5395:2013 and ANSI B71.4-2012.

General Safety

This product is capable of amputating hands and feet and of throwing objects. Always follow all safety instructions to avoid serious personal injury.

Using this product for purposes other than its intended use could prove dangerous to you and bystanders.

- Read and understand the contents of this *Operator's Manual* before starting the engine.
- Do not put your hands or feet near moving components of the machine.
- Do not operate the machine without all guards and other safety protective devices in place and working on the machine.
- Keep clear of any discharge opening. Keep bystanders and pets a safe distance away from the machine.
- Keep children out of the operating area. Never allow children to operate the machine.
- Stop the machine and shut off the engine before servicing, fueling, or unclogging the machine.

Improperly using or maintaining this machine can result in injury. To reduce the potential for injury, comply with these safety instructions and always pay attention to the safety-alert symbol, which means Caution, Warning, or Danger—personal safety instruction. Failure to comply with these instructions may result in personal injury or death.

You can find additional safety information where needed throughout this *Operator's Manual*.

Engine Emission Certification

The engine in this machine is EPA Tier 4 Final and stage 3b compliant.

Safety and Instructional Decals

Safety decals and instructions are easily visible to the operator and are located near any area of potential danger. Replace any decal that is damaged or missing.

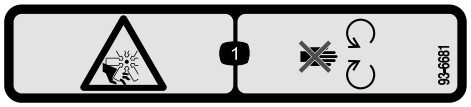

decal93-6681

93-6681

1. Cutting/dismemberment hazard, fan—stay away from moving parts.

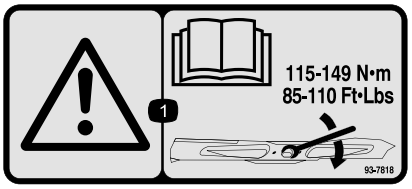

decal93-7818

93-7818

1. Warning—read the *Operator's Manual* for instructions on torquing the blade bolt/nut to 115 to 149 N·m (85 to 110 ft-lb).



decal98-4387

98-4387

1. Warning—wear hearing protection.

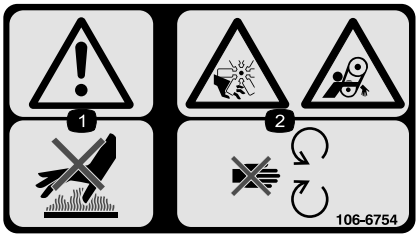

decal106-6754

106-6754

1. Warning—do not touch the hot surface.
2. Cutting/dismemberment hazard, fan and entanglement hazard, belt—stay away from moving parts.



decal106-6755

106-6755

1. Engine coolant under pressure.
2. Explosion hazard—read the *Operator's Manual*.
3. Warning—do not touch the hot surface.
4. Warning—read the *Operator's Manual*.

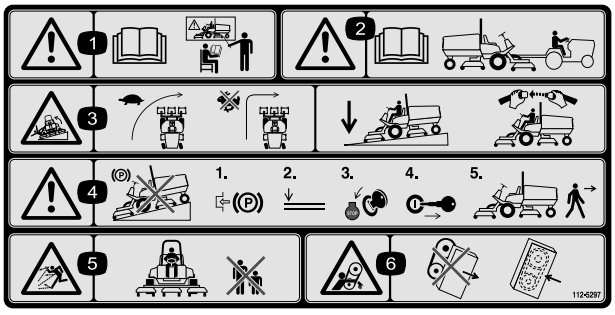

decal112-5297

112-5297

1. Warning—read the *Operator's Manual*, do not operate this machine unless you are trained.
2. Warning—read the *Operator's Manual* before towing the machine.
3. Tipping hazard—slow machine before turning, do not turn at high speeds; lower the cutting unit when driving down slopes; use a rollover protection system and wear the seat belt
4. Warning—do not park the machine on slopes; engage the parking brake, lower the cutting units, shut off the engine, and remove the key before leaving the machine.
5. Thrown object hazard—keep bystanders a safe distance away from the machine.
6. Entanglement hazard, belt—stay away from moving parts; keep all guards and shields in place.



decal117-2718

117-2718

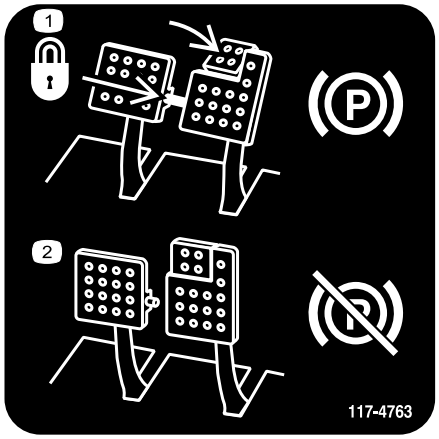

decal117-4763

117-4763

1. To engage the parking brake, secure the brake pedals with the locking pin, press the parking-brake pedals and engage the toe pedal.
2. To disengage the parking brake, disengage the locking pin and release the pedals.

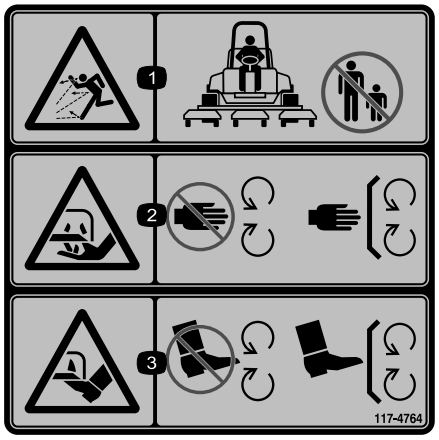

decal117-4764

117-4764

1. Thrown object hazard—keep bystanders a safe distance away from the machine.
2. Cutting hazard of hand, mower blade—stay away from moving parts, keep all guards and shields in place.
3. Cutting hazard of foot, mower blade—stay away from moving parts, keep all guards and shields in place.

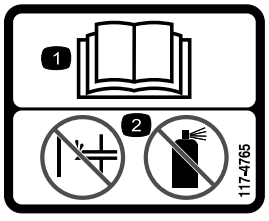

decal117-4765

117-4765

1. Read the *Operator's Manual.*
2. Do not use starting aids.

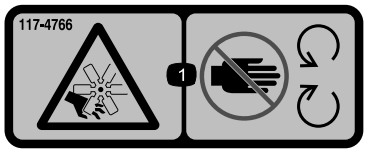

decal117-4766

117-4766

1. Cutting/dismemberment hazard; fan—stay away from moving parts, keep all guards and shields in place.

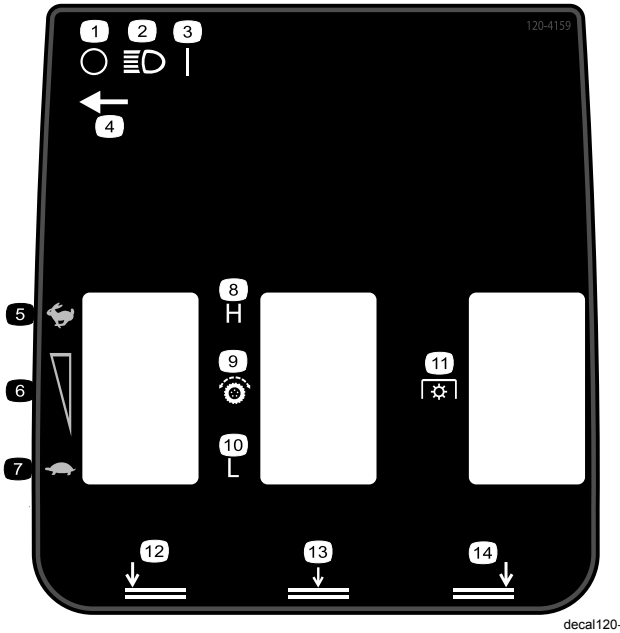

decal120-4159

120-4159

1. Off
2. Lights
3. On
4. Light-switch location
5. Fast
6. Variable-speed adjustment
7. Slow
8. High
9. Traction drive
10. Low
11. Power takeoff (PTO)
12. Lower, left deck
13. Lower, center decks
14. Lower, right deck

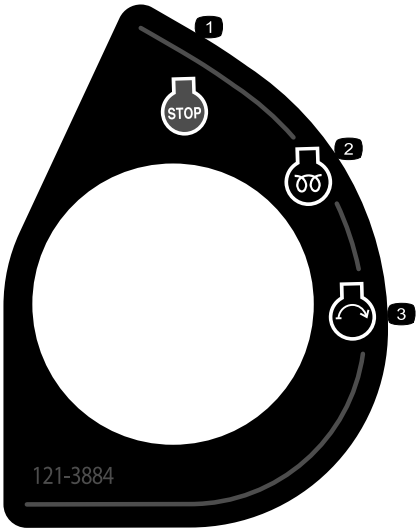

decal121-3884

121-3884

1. Engine—stop
2. Engine—preheat
3. Engine—start

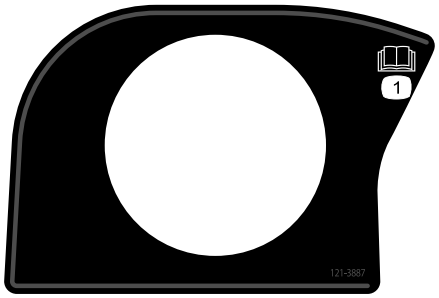

decal121-3887

121-3887

1. Read the *Operator's Manual*.

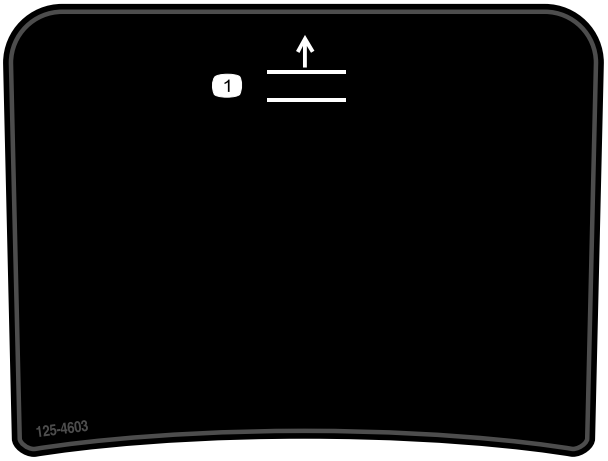

decal125-4603

125-4603

For Groundsmaster 4500 Only

1. Raise the decks.

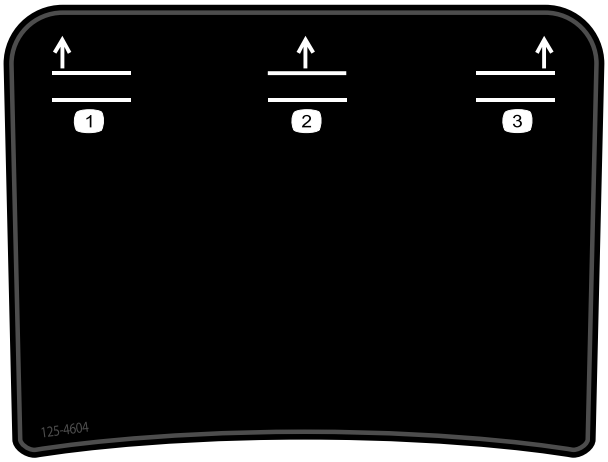

decal125-4604

125-4604

For Groundsmaster 4700 Only

1. Raise left deck
2. Raise center decks
3. Raise right deck

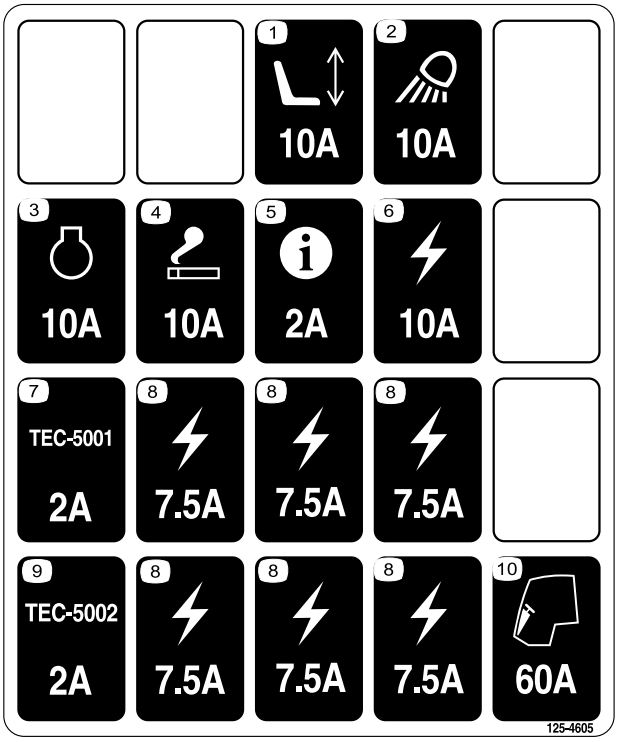

decal125-4605

125-4605

1. Power seat—10 A
2. Work light—10 A
3. Engine—10 A
4. Power port—10 A
5. Infocenter—2 A
6. Power supplied—10 A
7. GM4700 controller—2 A
8. Power supplied—7.5 A
9. GM4500 controller—2 A
10. Engine preheat—60 A



decalbatterysymbols

Battery Symbols

Some or all of these symbols are on your battery

1. Explosion hazard
2. No fire, open flame, or smoking
3. Caustic liquid/chemical burn hazard
4. Wear eye protection.
5. Read the *Operator's Manual.*
6. Keep bystanders a safe distance away from the battery.
7. Wear eye protection; explosive gases can cause blindness and other injuries.
8. Battery acid can cause blindness or severe burns.
9. Flush eyes immediately with water and get medical help fast.
10. Contains lead; do not discard

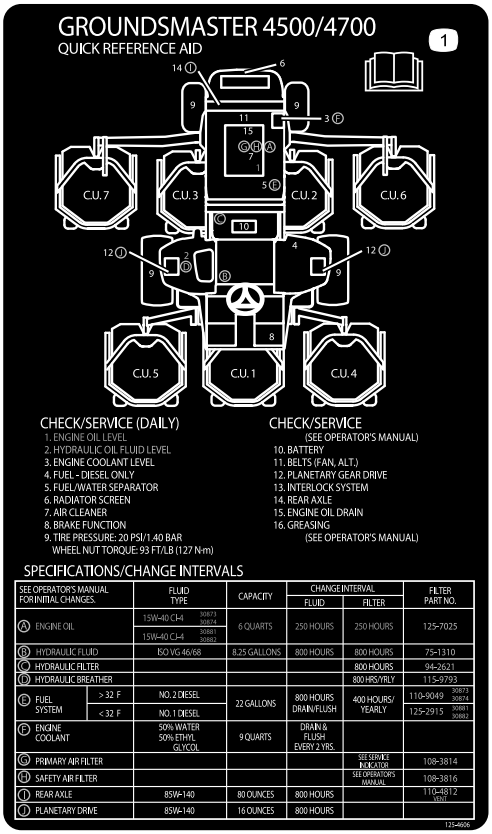

decal125-4606

125-4606

1. Read the *Operator's Manual* for information on maintenance.

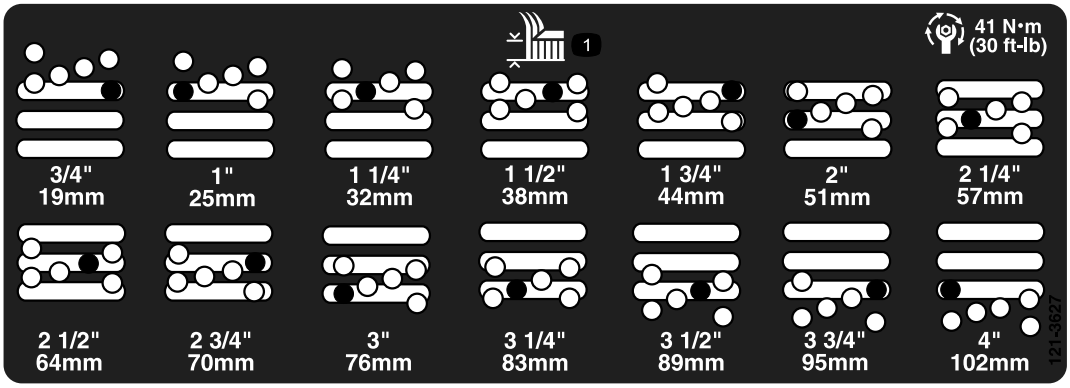

decal121-3627

121-3627

1. Height-of-cut settings

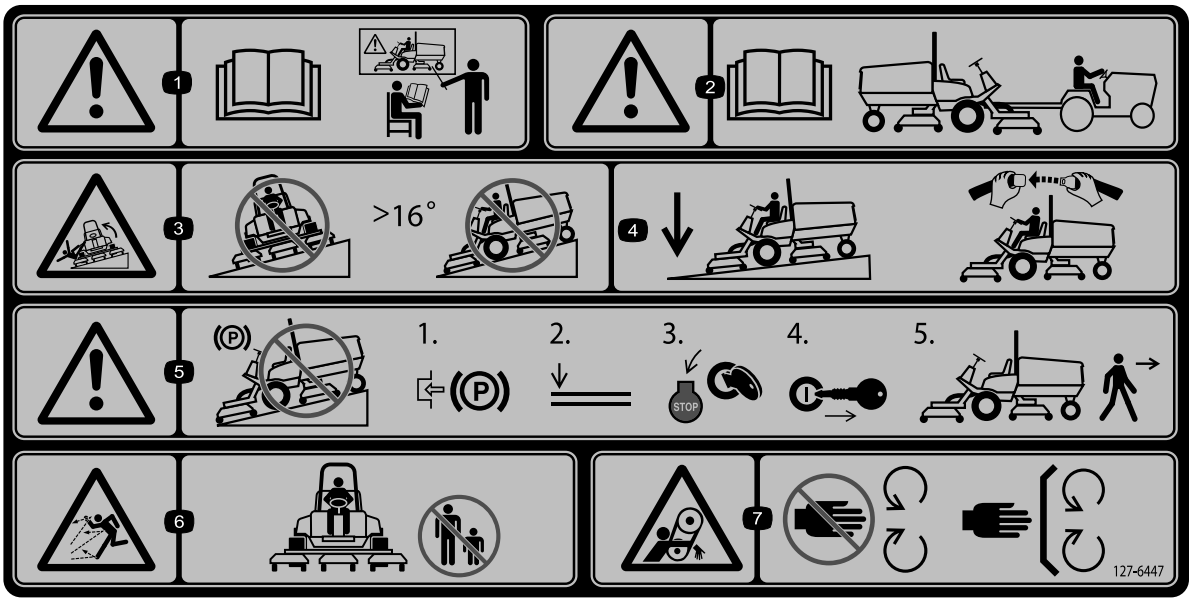

decal127-6447

127-6447

(Affix over Part No. 112-5297 for CE* for 4500 series machines)

* This safety decal includes a slope warning required on the machine for compliance to the European Lawn Mower Safety Standard EN ISO 5395:2013. The conservative maximum slope angles indicated for operation of this machine are prescribed by and required by this standard. This machine complies with the industry standard stability test in the static lateral and longitudinal tests with the maximum recommended slope indicated on the decal. Review the instructions for operating the machine on slopes in the *Operator's Manual* and the conditions in which the machine is being operated to determine whether the machine can be operated in the conditions on that day and at that site. Changes in the terrain can result in a change in slope operation for the machine. If possible, keep the cutting units lowered to the ground while operating the machine on slopes. Raising the cutting units while operating on slopes can cause the machine to become unstable.

1. Warning—read the *Operator's Manual*; do not operate the machine unless you have received training.
2. Warning—read the *Operator's Manual* for information on towing.
3. Tipping hazard—do not drive on slopes greater than 16 degrees.
4. Keep the decks lowered while driving down slopes; always wear a seat belt when operating the machine.
5. Warning—do not park on slopes; 1) Engage the parking brake, 2) Lower the decks, 3) Turn off the engine. 4) Remove the key, 5) Leave the machine.
6. Thrown object hazard—keep bystanders away from the machine.
7. Entanglement hazard, belt—keep away from moving parts; keep all guards and shields in place.

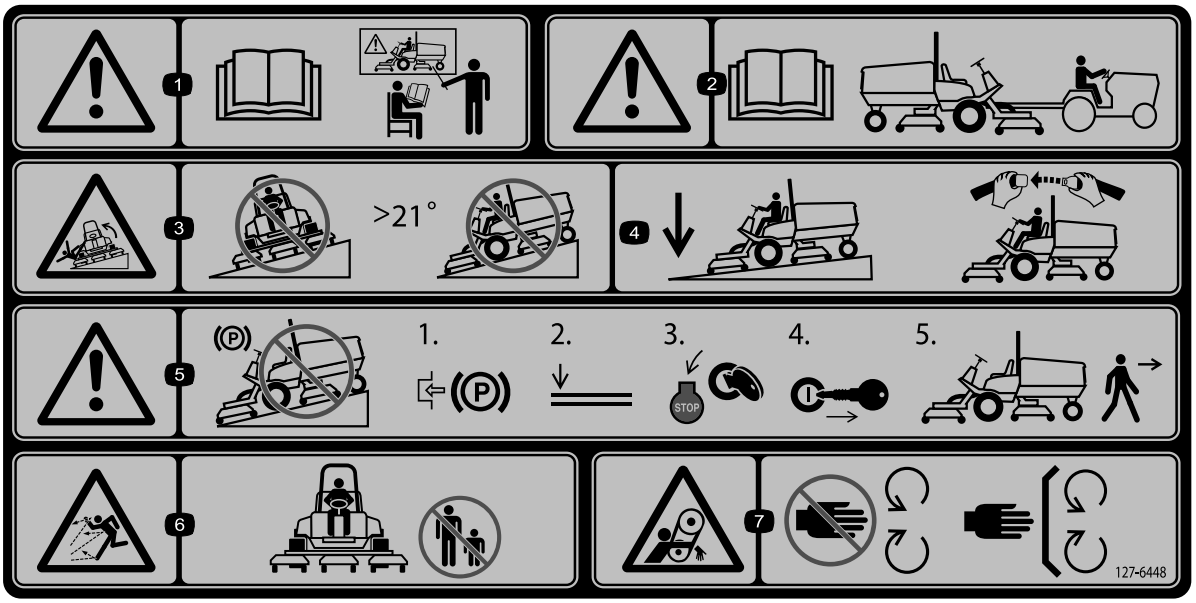

decal127-6448

127-6448

(Affix over Part No. 112-5297 for CE* for 4700 series machines)

* This safety decal includes a slope warning required on the machine for compliance to the European Lawn Mower Safety Standard EN ISO 5395:2013. The conservative maximum slope angles indicated for operation of this machine are prescribed by and required by this standard. This machine complies with the industry standard stability test in the static lateral and longitudinal tests with the maximum recommended slope indicated on the decal. Review the instructions for operating the machine on slopes in the *Operator's Manual* and the conditions in which the machine is being operated to determine whether the machine can be operated in the conditions on that day and at that site. Changes in the terrain can result in a change in slope operation for the machine. If possible, keep the cutting units lowered to the ground while operating the machine on slopes. Raising the cutting units while operating on slopes can cause the machine to become unstable.

1. Warning—read the *Operator's Manual*; do not operate the machine unless you have received training.
2. Warning—read the *Operator's Manual* for information on towing.
3. Tipping hazard—do not drive on slopes greater than 21 degrees.
4. Keep the decks lowered while driving down slopes; always wear a seat belt when operating the machine.
5. Warning—do not park on slopes; 1) Engage the parking brake, 2) Lower the decks, 3) Turn off the engine. 4) Remove the key, 5) Leave the machine.
6. Thrown object hazard—keep bystanders away from the machine.
7. Entanglement hazard, belt—keep away from moving parts; keep all guards and shields in place.

Setup

Loose Parts

Use the chart below to verify that all parts have been shipped.

Procedure	Description	Qty.	Use
1	Warning decal	1	Replace the warning decal (CE machines only).
2	Hood-latch bracket Rivet Washer Screw (1/4 x 2 inches) Locknut (1/4 inch)	1 2 1 1 1	Install the hood latch (CE machines only).
3	No parts required	–	Adjust the roller scraper (optional).
4	No parts required	–	Install the mulching baffle (optional).
5	No parts required	–	Prepare the machine.

Media and Additional Parts

Description	Qty.	Use
Operator's Manual	1	Review before operating the machine.
Engine owner’s manual	1	Use to reference engine information.
Parts Catalog	1	Use to reference part numbers.
Operator Training Material	1	Review before operating the machine.

Note: Determine the left and right sides of the machine from the normal operating position.

1

Replacing the Warning Decal (CE Machines Only)

Parts needed for this procedure:

1	*Warning decal*

Procedure

On machines requiring European CE compliance, replacing warning decal Part No. 112-5297 with warning decal Part No. 127-6447 (for 4500 series machines) or decal Part No. 127-6448 (for 4700 series machines).

2

Installing the Hood Latch (CE Machines Only)

Parts needed for this procedure:

1	Hood-latch bracket
2	Rivet
1	Washer
1	Screw (1/4 x 2 inches)
1	Locknut (1/4 inch)

Procedure

1. Unhook the hood latch from the hood-latch bracket.
2. Remove the 2 rivets securing the hood-latch bracket to the hood (Figure 3). Remove the hood-latch bracket from the hood.

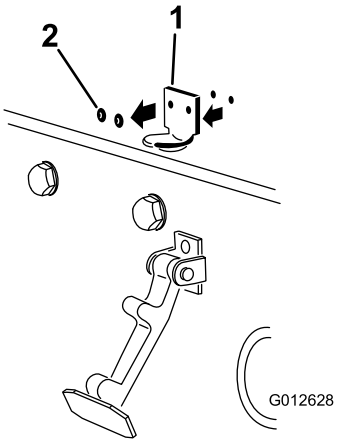

g012628

Figure 3

1. Hood-latch bracket 2. Rivets

3. While aligning the mounting holes, position the CE lock bracket and the hood-latch bracket onto the hood (Figure 4).

   Note: The lock bracket must be against the hood. Do not remove the bolt and nut from the lock-bracket arm.

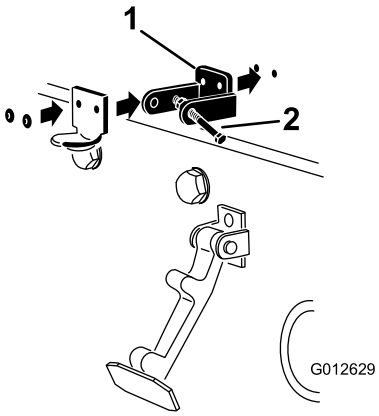

g012629

Figure 4

1. CE lock bracket 2. Bolt and nut

4. Align the washers with the holes on the inside of the hood.
5. Rivet the brackets and the washers to the hood (Figure 4).
6. Hook the latch onto the hood-latch bracket (Figure 5).

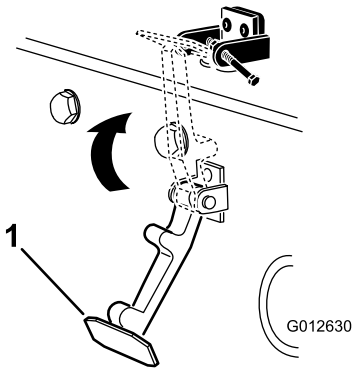

g012630

Figure 5

1. Hood latch

7. Screw the bolt into the other arm of the hood-latch bracket to lock the latch in position (Figure 6). Tighten the bolt but do not tighten the nut.

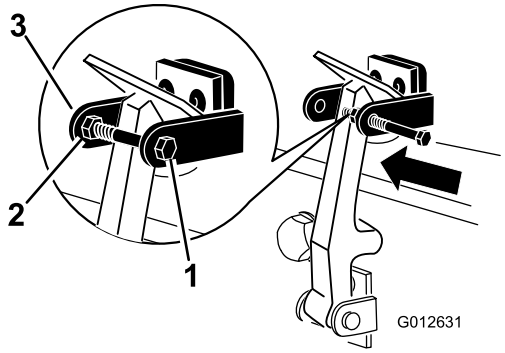

Figure 6

1. Bolt
2. Nut
3. Arm of hood-latch bracket

3

Adjusting the Roller Scraper (Optional)

No Parts Required

Procedure

The optional rear roller scraper is designed to work best when there is an even gap of 0.5 to 1 mm (0.020 to 0.040 inch) between the scraper and roller.

1. Loosen the grease fitting and the mounting screw (Figure 7).

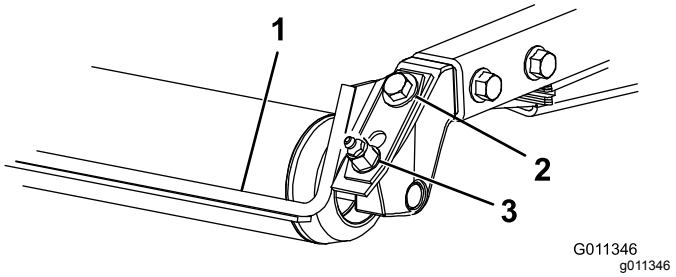

Figure 7

1. Roller scraper
2. Mounting screw
3. Grease fitting

2. Slide the scraper up or down until a gap of 0.5 to 1 mm (0.020 to 0.040 inch) is achieved between the rod and the roller.
3. Secure the grease fitting and screw to 41 N·m (30 ft-lb) in an alternating sequence.

4

Installing the Mulching Baffle (Optional)

No Parts Required

Procedure

1. Thoroughly clean debris from the mounting holes on the rear wall and left wall of the chamber.
2. Install the mulching baffle in the rear opening and secure it with 5 flange-head bolts (Figure 8).

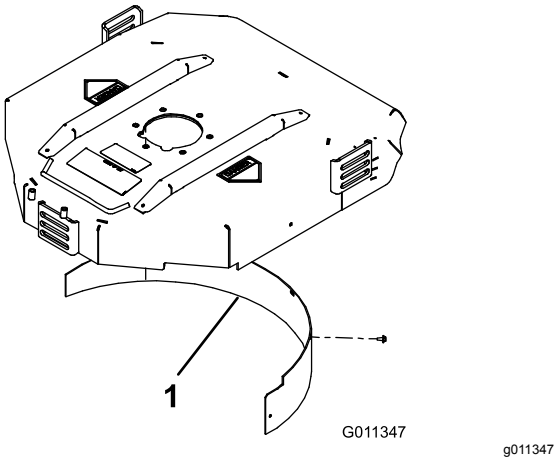

Figure 8

1. Mulching baffle

3. Verify that mulching baffle does not interfere with the tip of the blade and does not protrude inside the surface of the rear chamber wall.

⚠ DANGER

Using the high-lift blade with the mulching baffle could cause the blade to break, resulting in personal injury or death.

Do not use the high-lift blade with the mulching baffle.

5

Preparing the Machine

No Parts Required

Checking the Tire Pressure

Check the tire pressure before use; refer to Checking the Tire Pressure (page 27).

Important: **Maintain pressure in all tires to ensure a good quality-of-cut and proper machine performance. *Do not underinflate the tires.***

Checking the Fluid Levels

1. Check the rear-axle lubricant level before the engine is first started, refer to Checking the Rear-Axle Lubricant (page 64).
2. Check the engine-oil level before starting the engine; refer to Checking the Engine-Oil Level (page 25).
3. Check the hydraulic-fluid level before starting the engine; refer to Checking the Hydraulic-Fluid Level (page 69).
4. Check the cooling system before starting the engine; refer to Checking the Cooling System (page 67).

Greasing the Machine

Grease the machine before use; refer to Greasing the Bearings and Bushings (page 53). Failure to properly grease the machine results in premature failure of critical parts.

Product Overview

Controls

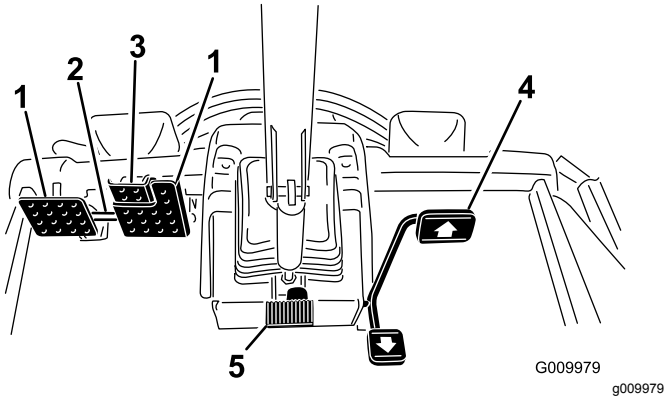

Figure 9

1. Brake pedal
2. Pedal-locking latch
3. Parking-brake pedal
4. Traction pedal
5. Tilt-steering pedal

Traction Pedal

The traction pedal (Figure 9) controls forward and reverse operation. Press the top of the pedal to move forward and the bottom to move backward.

To stop the machine, use 1 of the following procedures:

- Reduce your foot pressure on the traction pedal and allow it to return to the center position. The machine dynamically brakes to a smooth stop.
- Tap or hold the reverse pedal briefly. This stops the machine faster than dynamic braking.

Note: In emergency braking situations, press the service brake pedals in addition to using the reverse pedal as stated above. This is the quickest method to stop the machine.

Brake Pedals

There are 2 foot pedals that operate individual wheel brakes for turning assistance, parking, and to aid in better side-hill traction. A latch connects the pedals for parking-brake operation and transport (Figure 9).

Pedal-Locking Latch

The pedal-locking latch connects the pedals together to engage the parking brake (Figure 9).

Parking-Brake Pedal

To engage the parking brake, (Figure 9) connect the pedals together with the pedal-locking latch and push down on the right brake pedal while engaging the toe pedal. To release the parking brake, press 1 of the brake pedals until the parking brake latch retracts.

Tilt-Steering Pedal

Press the tilt-steering pedal to tilt the steering wheel to the desired position, then release the pedal to lock the adjustment (Figure 9).

Key Switch

The key switch (Figure 10) has 3 positions: OFF, ON/PREHEAT, and START.

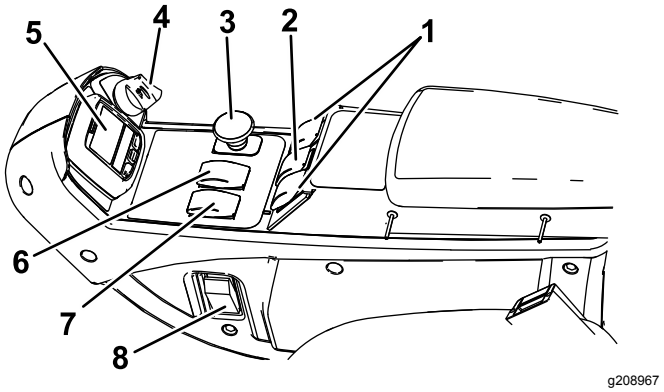

Figure 10

1. Lift switches (Groundsmaster 4700 machine only)
2. Lift switch (Groundsmaster 4500 and 4700 machines)
3. PTO switch
4. Key switch
5. InfoCenter
6. Hi-Lo speed control
7. Engine-speed switch
8. Light switch

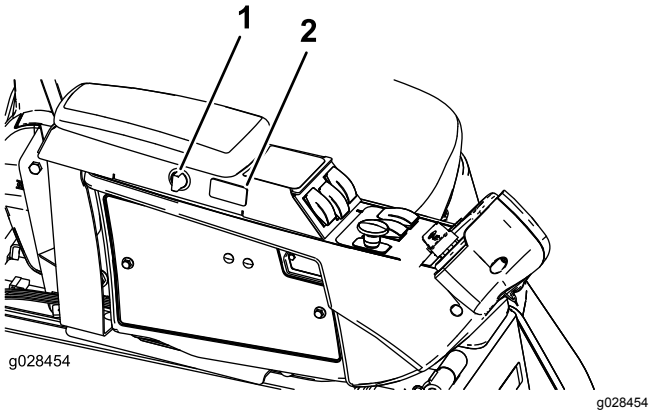

Figure 11

1. Power-point switch
2. Cruise-control switch

Engine-Speed Switch

The engine-speed switch (Figure 10) has 2 modes to change the engine speed. Tap the switch to increase or decrease the engine speed in 100 rpm increments.

Hold down the switch to automatically move to High or Low idle, depending on which end of the switch you press.

PTO Switch

The PTO switch has 2 positions: OUT (START) and IN (STOP). Pull the PTO button out to engage the mower-deck blades. Push the button in to disengage the mower-deck blades (Figure 10).

High-Low Speed Control

The switch (Figure 10) allows the speed range to increase for transporting the machine. To switch between the High and Low speed ranges, raise the decks, disengage the PTO and the cruise control, put the traction pedal into the NEUTRAL position, and move the machine at a slow speed.

Note: The cutting decks do not operate and/or cannot be lowered from the transport position when the switch is in the high range.

Lift Switches

The lift switches raise and lower the mower decks (Figure 10). Press the switches forward to lower the mower decks and rearward to raise the mower decks. When starting the machine, with the mower decks in the down position, press the lift switch down to allow the mower decks to float and mow.

Note: The decks do not lower while in the high-speed range and they do not raise or lower if you are out of the seat while the engine is running. Also, the decks lower with the key in the ON position and you are in the seat.

Cruise-Control Switch

The cruise-control switch locks in the pedal position to maintain the desired ground speed (Figure 10). Pressing the rear of the switch turns off the cruise control, the middle position of the switch enables the cruise-control function, and the front of the switch sets the desired ground speed.

Note: Pressing either brake pedal or moving the traction pedal into the reverse position, for 1 second, also disengages the pedal position.

Light Switch

Press the lower edge of the switch (Figure 10) to turn on the lights. Press the upper edge of the switch to turn off the lights.

Power Point

Use the power point (Figure 12) to power optional 12 V electrical accessories.

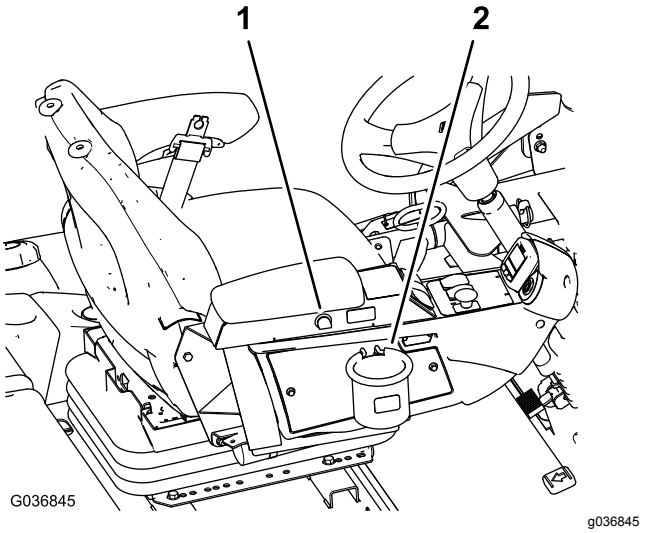

Figure 12

1. Power point
2. Bag holder

Bag Holder

Use the bag holder for storage (Figure 12).

Seat Adjustments

Seat-Adjustment Lever

Move the seat adjustment lever on the side of the seat outward, slide the seat to the desired position, and release the lever to lock the seat into position (Figure 13).

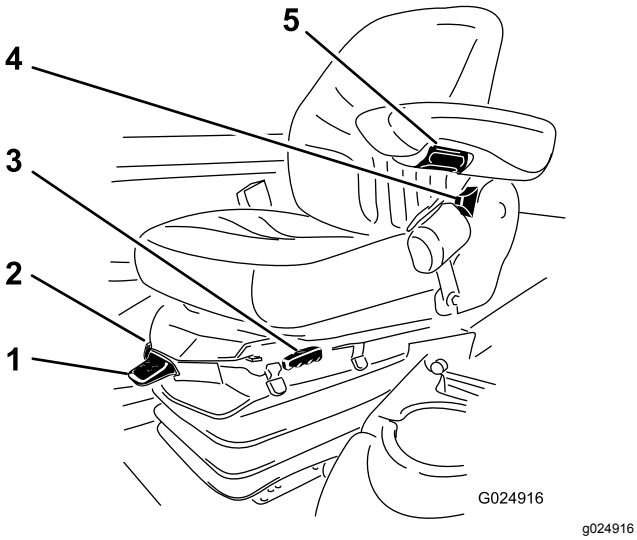

Figure 13

1. Weight gauge
2. Weight adjustment lever
3. Seat adjustment lever
4. Seat-back adjustment lever
5. Armrest adjustment knob

Armrest Adjustment Knob

Rotate the knob to adjust the armrest angle (Figure 13).

Seat-Back Adjustment Lever

Move the lever to adjust the seat-back angle (Figure 13).

Weight Gauge

The weight gauge indicates when the seat is adjusted to the weight of the operator (Figure 13). Adjust the height by positioning the suspension within the range of the green region.

Weight Adjustment Lever

Use this lever to adjust to the proper weight of the operator (Figure 13). Pull up the lever to increase the air pressure and push down to decrease the air pressure. The proper adjustment is correct when the weight gauge is in the green region.

Using the InfoCenter LCD Display

The InfoCenter LCD display shows information about your machine, such as the operating status, various diagnostics and other information about the machine (Figure 14). There is a splash screen and main information screen of the InfoCenter. You can switch between the splash screen and main information screen at any time by pressing any of the InfoCenter buttons and then selecting the appropriate directional arrow.

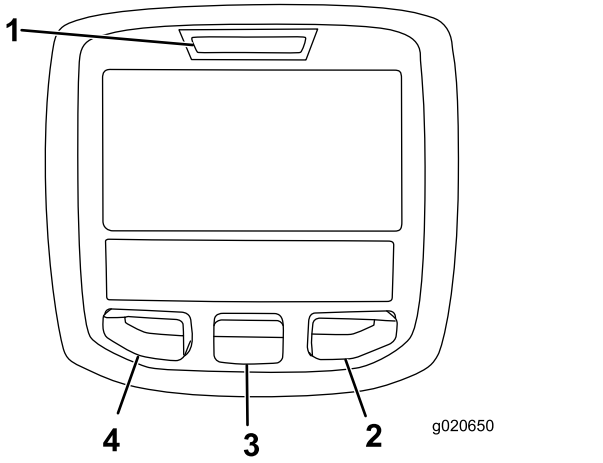

Figure 14

1. Indicator light
2. Right button
3. Middle button
4. Left button

- Left Button, Menu Access/Back Button—press this button to access the InfoCenter menus. You can use it to exit any menu that you are currently using.
- Middle Button—use this button to scroll down menus.
- Right Button—use this button to open a menu where a right arrow indicates additional content.
- Beeper—activated when lowering the decks or for advisories and faults.

Note: The purpose of each button may change depending on what is required at the time. Each button is labeled with an icon displaying its current function.

InfoCenter Icon Description

SERVICE DUE	Indicates when scheduled service should be performed
n min	The status of the engine rpm.
i	Info icon
	Maximum traction speed setting
	Fast
	Slow
	The fan is reversed.
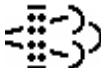	Stationary regeneration is required.
	The air-intake heater is active
	Raise the left deck.
	Raise the center deck
	Raise the right deck
	The operator must sit in the seat.
	The parking brake is on.
H	The range is high.
N	Neutral
L	Identifies the range as Low
	Coolant temperature (°C or °F)
	Temperature (hot)
	Traction or Traction Pedal
	Not allowed
	Start the engine.
	The PTO is on.

InfoCenter Icon Description (cont'd.)

	The cruise control is on.
	Stop the engine.
	Engine
	Key switch
	Cutting units are lowering.
	Cutting units are raising.
PIN	PIN code
	Hydraulic fluid temperature
CAN	CAN bus
	InfoCenter
Bad	Bad or failed
Ctr	Center
Rht	Right
Left	Left
	Bulb
OUT	Output of TEC controller or control wire in harness
HI	Over the allowed range
LO	Under the allowed range
HI /LO	Out of range
	Switch
	Operator must release switch.
	Operator should change to indicated state.

InfoCenter Icon Description (cont'd.)

Symbols are often combined to form sentences. Some examples are shown below	
	Operator should put machine in neutral.
	Engine start is denied.
	Engine shutdown.
	Engine coolant is too hot.
	Hydraulic fluid is too hot.
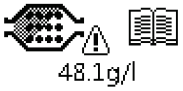	DPF ash accumulation notification. Refer to Servicing the Diesel Particulate Filter (DPF) in the maintenance section for details.
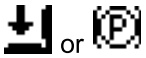	Sit down or set parking brake.

Using the Menus

To access the InfoCenter menu system, press the menu access button while at the main screen. This brings you to the main menu. Refer to the following tables for a synopsis of the options available from the menus:

Main Menu	
Menu Item	**Description**
Faults	Contains a list of the recent machine faults. Refer to the *Service Manual* or your Toro Distributor for more information on the Faults menu and the information contained there.
Service	Contains information on the machine such as hours of use and other similar numbers.
Diagnostics	Lists various states that the machine currently has. You can use this to troubleshoot certain issues as it quickly tells you which machine controls are on and which are off.
Settings	Allows you to customize and modify configuration variables on the InfoCenter display.
About	Lists the model number, serial number, and software version of your machine.

Service	
Menu Item	**Description**
Hours	Lists the total number of hours that the machine, engine and fan have been on, as well as the number of hours the machine has been transported and overheated.
Counts	Lists the number of starts, deck PTO cycles, and fan reversals the machine has experienced.

Diagnostics	
Menu Item	**Description**
Left Deck Center Deck Right Deck Traction HI/LO Range PTO Engine Cruise	Refer to the *Service Manual* or your Toro Distributor for more information on the Engine Run menu and the information contained there.

Settings	
Menu Item	**Description**
Units	Controls the units used on the InfoCenter (English or Metric).
Language	Controls the language used on the InfoCenter*.
LCD Backlight	Controls the brightness of the LCD display.
LCD Contrast	Controls the contrast of the LCD display.
Protected Menus	Allows a person authorized by your company with the PIN code to access protected menus.
Protect Settings	Allows the ability to change the settings in the protected settings.
Auto Idle	Controls the amount of time allowed before idling the engine when the machine is not in use.
Mow Speed	Controls the maximum speed while in mow (low range).
Trans. Speed	Controls the maximum speed while in transport (high range).
Counterbalance	Controls the amount of counterbalance applied by the decks.

*Only "operator-faced" text is translated. Faults, Service, and Diagnostics screens are "service-faced." Titles are in the selected language, but menu items are in English.

About	
Menu Item	**Description**
Model	Lists the model number of the machine.
SN	Lists the serial number of the machine.
S/W Rev	Lists the software revision of the master controller.

Protected Menus

There are 5 operating configuration settings that are adjustable within the Settings Menu of the InfoCenter: auto idle, maximum mowing ground speed, maximum transport ground speed, Smart Power, and deck counter balance. These settings are in the Protected Menu.

Accessing Protected Menus

Note: The factory default PIN code for you machine is either 0000 or 1234.

If you changed the PIN code and forgot the code, contact your Authorized Toro Distributor for assistance.

1. From the MAIN MENU, use the center button to scroll down to the SETTINGS MENU and press the right button (Figure 15).

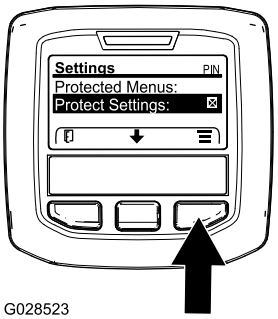

g028523

Figure 15

2. In the SETTINGS MENU, use the center button to scroll down to the PROTECTED MENU and press the right button (Figure 16A).

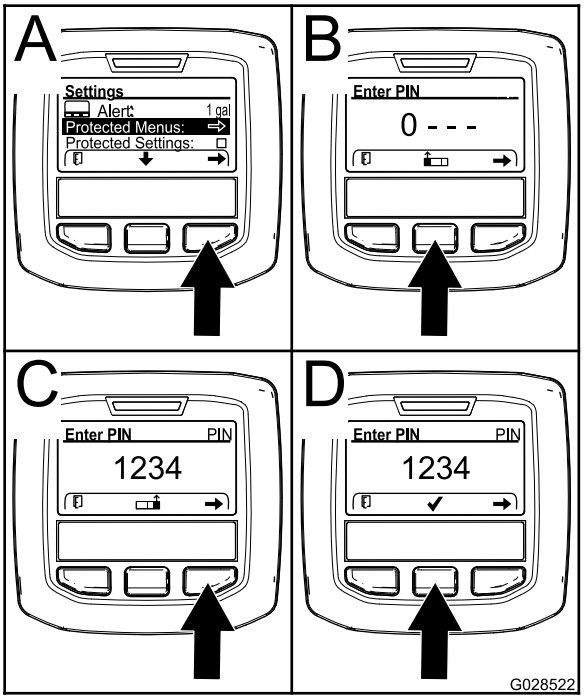

g028522

Figure 16

3. To enter the PIN code, press the center button until the correct first digit appears, then press the right button to move on to the next digit (Figure 16B and Figure 16C). Repeat this step until the last digit is entered and press the right button once more.
4. Press the middle button to enter the PIN code (Figure 16D).

   Wait until the red indicator light of the InfoCenter illuminates.

   Note: If the InfoCenter accepts the PIN code and the protected menu is unlocked, the word “PIN” displays in the upper right corner of the screen.

Note: Rotate the key switch to the OFF position and then to the ON position locks the protected menu.

You have the ability to view and change the settings in the Protected Menu. Once you access the Protected Menu, scroll down to Protect Settings option. Use the right button to change the setting. Setting the Protect Settings to OFF allows you to view and change the settings in the Protected Menu without entering the PIN code. Setting the Protect Settings to ON hides the protected options and requires you to enter the PIN code to change the setting in the Protected Menu. After you set the PIN code, rotate the key switch OFF and back to the ON position to enable and save this feature.

Viewing and Changing the Protected Menu Settings

1. In the Protected Menu, scroll down to Protect Settings.
2. To view and change the settings without entering a PIN code, use the right button to change the Protect Settings to OFF.
3. To view and change the settings with a PIN code, use the left button to select ON, set the PIN code, and turn the key to the OFF position and then to the ON position.

Setting the Auto Idle

1. In the Settings Menu, scroll down to Auto Idle.
2. Press the right button to change the auto idle time between Off, 8S, 10S, 15S, 20S, and 30S.

Setting the Maximum Allowed Mow Speed

1. In the Settings Menu, scroll down to Mow Speed and press the right button.
2. Use the right button to increase the max full mow speed in 5% increments between 50% and 100%.
3. Use the center button to decrease the max full mow speed in 5% increments between 50% and 100%.
4. Press the left button to exit.

Setting the Maximum Allowed Transport Speed

1. In the Settings Menu, scroll down to Transport Speed and press the right button.
2. Use the right button to increase the max transport speed in 5% increments between 50% and 100%.
3. Use the center button to decrease the max transport speed in 5% increments between 50% and 100%.
4. Press the left button to exit.

Turning the Smart Power ON/OFF

1. In the settings menu, scroll down to Smart Power.
2. Press the right button to switch between ON and OFF.
3. Press the left button to exit.

Setting the Counterbalance

1. In the Settings Menu, scroll down to Counter Balance and press the right button.
2. Press the right button to switch between Low, Med, and High.

When finished with the Protected Menu, press the left button to exit to the Main Menu, then press the left button to exit to the Run Menu.

Viewing the Fuel Consumption Rate

You can view the average fuel consumption rate for the lifetime of the machine in the Service Menu.

Specifications

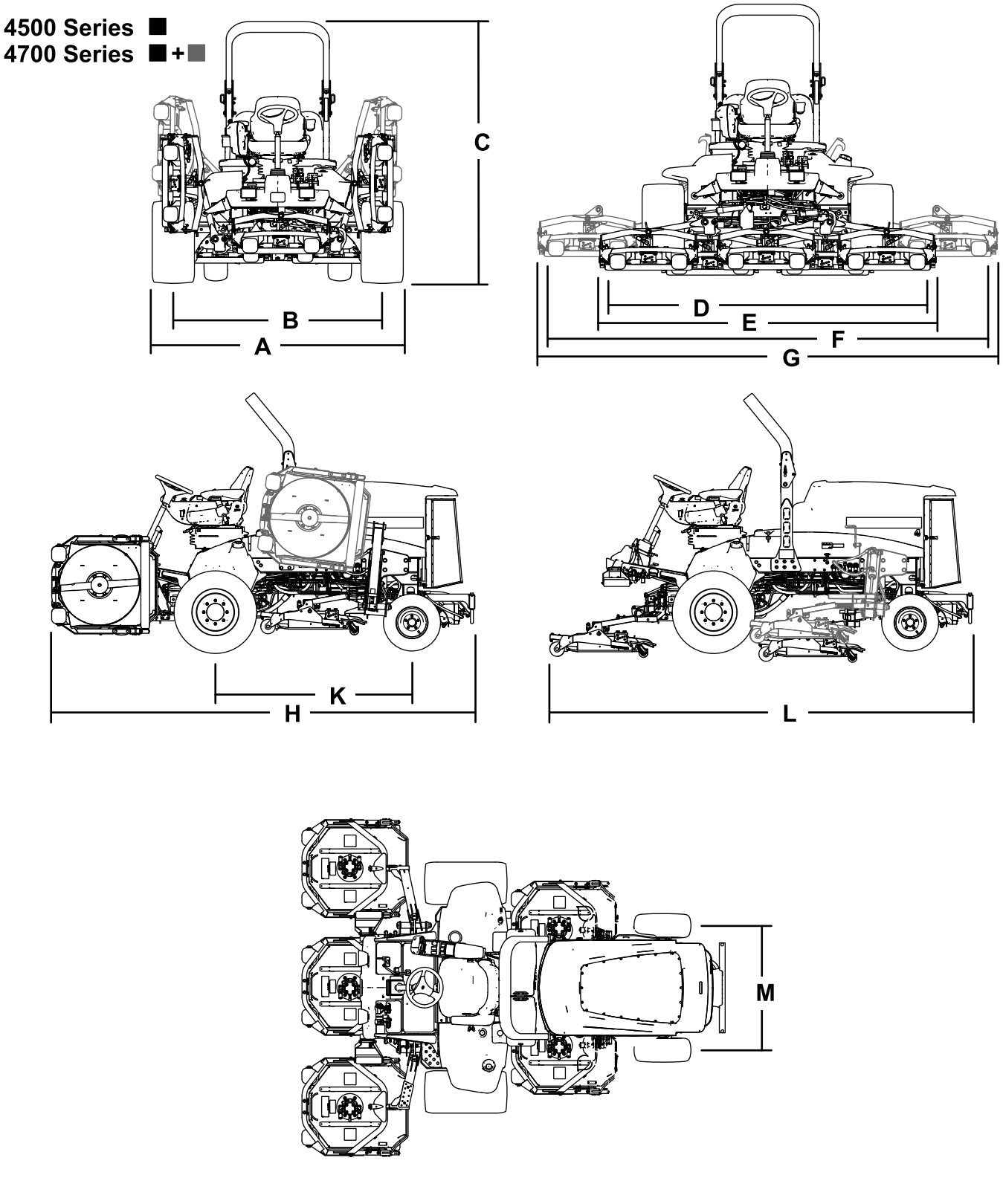

Figure 17

Machine Specifications

Description	4500-D	Figure 17 reference	4700-D	Figure 17 reference
Width of cut	280 cm (110 inches)	D	380 cm (150 inches)	F
Overall width				
Mower decks down	286 cm (113 inches)	E	391 cm (154 inches)	G
Mower decks up (transport)	224 cm (88 inches)	A	224 cm (88 inches)	A
Track width				
Front	224 cm (88 inches)	B	224 cm (88 inches)	B
Rear	141 cm (56 inches)	M	141 cm (56 inches)	M
Height with ROPS	226 cm (88.8 inches)	C	226 cm (88.8 inches)	C
Overall length				
Mower decks down	370 cm (146 inches)	H	370 cm (146 inches)	H
Mower decks up (transport)	370 cm (146 inches)	L	370 cm (146 inches)	L
Ground clearance	15 cm (6 inches)		15 cm (6 inches)	
Wheel base	171 cm (68 inches)	K	171 cm (68 inches)	K
Net weight (with mower decks and no fuel)	1,937 kg (4,270 lb)		2,277 kg (5,020 lb)	

Note: Specifications and design are subject to change without notice.

Mower Deck Specifications

Length	86.4 cm (34 inches)
Width	86.4 cm (34 inches)
Height	24.4 cm (9.6 inches) to carrier mount 26.7 cm (10-1/2 inches) at 3/4-inch height of cut 34.9 cm (13-3/4 inches) at 4-inch height of cut
Weight	88 kg (195 lb)

Attachments/Accessories

A selection of Toro approved attachments and accessories is available for use with the machine to enhance and expand its capabilities. Contact your Authorized Service Dealer or Distributor or go to www.Toro.com for a list of all approved attachments and accessories.

Operation

Note: Determine the left and right sides of the machine from the normal operating position.

Before Operation

Before Operation Safety

General Safety

- Never allow children or untrained people to operate or service the machine. Local regulations may restrict the age of the operator. The owner is responsible for training all operators and mechanics.
- Become familiar with the safe operation of the equipment, operator controls, and safety signs.
- Know how to stop the machine and engine quickly.
- Check that operator-presence controls, safety switches, and shields are attached and functioning properly. Do not operate the machine unless they are functioning properly.
- Before mowing, always inspect the machine to ensure that the blades, blade bolts, and cutting assemblies are in good working condition. Replace worn or damaged blades and bolts in sets to preserve balance.
- Inspect the area where you will use the machine and remove all objects that the machine could throw.

Fuel Safety

- Use extreme care in handling fuel. It is flammable and its vapors are explosive.
- Extinguish all cigarettes, cigars, pipes, and other sources of ignition.
- Use only an approved fuel container.
- Never remove the fuel cap or fill the fuel tank while the engine is running or hot.
- Never refuel the machine in an enclosed space.
- Never store the machine or fuel container where there is an open flame, spark, or pilot light, such as on a water heater or other appliance.
- If you spill fuel, do not attempt to start the engine; avoid creating any source of ignition until the fuel vapors have dissipated.

Checking the Engine-Oil Level

Before you start the engine and use the machine, check the oil level in the engine crankcase; refer to Checking the Engine-Oil Level (page 55).

Checking the Cooling System

Before you start the engine and use the machine, check the cooling system; refer to Checking the Cooling System (page 25).

Checking the Hydraulic System

Before you start the engine and use the machine, check the hydraulic system; refer to Checking the Hydraulic Lines and Hoses (page 72).

Draining the Water Separator

Drain water or other contaminants from the water separator; refer to Draining the Water Separator (page 25).

Checking the Rear Axle and Gearbox for Leaks

Check the rear axle and rear-axle gearbox for leaks; refer to Checking the Rear Axle and Gearbox for Leaks (page 64).

Filling the Fuel Tank

Fuel Tank Capacity

Fuel tank capacity: 83 L (22 US gallons)

Fuel Specification

Important: **Use only ultra-low sulphur diesel fuel. Fuel with higher rates of sulfur degrades the diesel oxidation catalyst (DOC), which causes operational problems and shortens the service life of engine components.**

Failure to observe the following cautions may damage the engine.

- Never use kerosene or gasoline instead of diesel fuel.
- Never mix kerosene or used engine oil with the diesel fuel.
- Never keep fuel in containers with zinc plating on the inside.
- Do not use fuel additives.

Petroleum Diesel

Cetane rating: 45 or higher

Sulfur content: Ultra-low sulfur (<15 ppm)

Fuel Table

Diesel fuel specification	Location
ASTM D975 No. 1-D S15 No. 2-D S15	USA
EN 590	European Union
ISO 8217 DMX	International
JIS K2204 Grade No. 2	Japan
KSM-2610	Korea

- Use only clean, fresh diesel fuel or biodiesel fuels.
- Purchase fuel in quantities that can be used within 180 days to ensure fuel freshness.

Use summer-grade diesel fuel (No. 2-D) at temperatures above -7°C (20°F) and winter-grade fuel (No. 1-D or No. 1-D/2-D blend) below that temperature.

Note: Use of winter-grade fuel at lower temperatures provides lower flash point and cold flow characteristics which eases starting and reduces fuel filter plugging.

Using summer-grade fuel above -7°C (20°F) contributes toward longer fuel pump life and increased power compared to winter-grade fuel.

Biodiesel

This machine can also use a biodiesel blended fuel of up to B20 (20% biodiesel, 80% petroleum diesel).

Sulfur content: Ultra-low sulfur (<15 ppm)

Biodiesel fuel specification: ASTM D6751 or EN14214

Blended fuel specification: ASTM D975, EN590, or JIS K2204

Important: **The petroleum diesel portion must be ultra-low sulfur.**

Observe the following precautions:

- Biodiesel blends may damage painted surfaces.
- Use B5 (biodiesel content of 5%) or lesser blends in cold weather.
- Monitor seals, hoses, gaskets in contact with fuel as they may be degraded over time.
- Fuel filter plugging may be expected for a time after converting to biodiesel blends.
- Contact your Authorized Toro Distributor if you wish for more information on biodiesel.

Adding Fuel

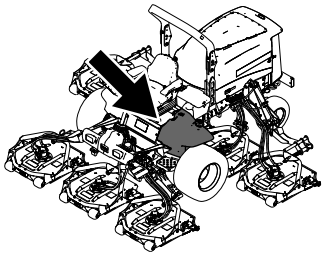

g198621

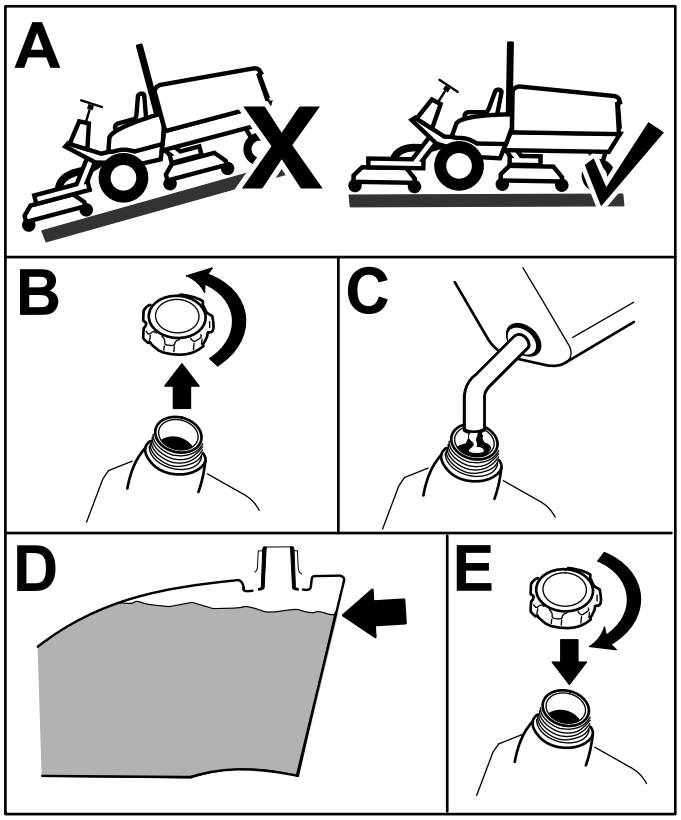

g198620

Figure 18

Fill the tank to about 6 to 13 mm (1/4 to 1/2 inch) below the top of the tank, not the filler neck, with diesel fuel.

Note: If possible, fill the fuel tank after each use; this will minimize possible buildup of condensation inside the fuel tank.

Checking the Tire Pressure

Service Interval: Before each use or daily

The correct air pressure in the tires is 138 kPa (20 psi).

Important: **Maintain the recommended pressure in all tires to ensure a good quality of cut and proper machine performance. Do not under-inflate the tires.**

Check the air pressure in all the tires before operating the machine.

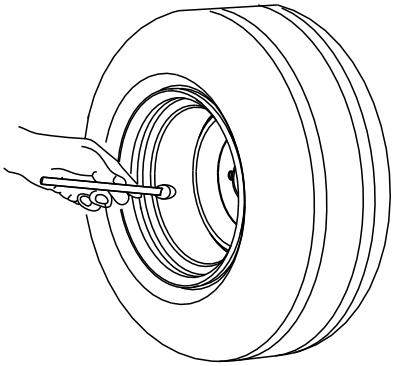

G001055

g001055

Figure 19

Checking the Torque of the Wheel-Lug Nuts

Service Interval: After the first hour

After the first 10 hours

Every 200 hours

Torque the wheel-lug nuts to 115 to 136 N·m (85 to 100 ft-lb) in the order shown in Figure 20 and Figure 21.

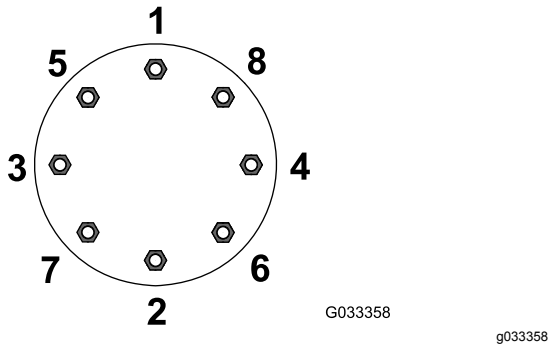

Figure 20
Front Wheels

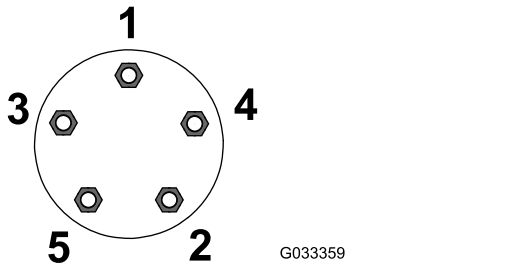

Figure 21
Rear Wheels

⚠ WARNING

Failing to maintain proper torque of the wheel-lug nuts could result in personal injury.

Torque the wheel-lug nuts to the proper torque value.

Adjusting the Rollover Protection System (ROPS)

⚠ WARNING

To avoid injury or death from rollover: keep the roll bar in the raised locked position and use the seat belt.

Ensure that the seat is secured with the seat latch.

⚠ WARNING

There is no rollover protection when the roll bar is in the down position.

- **Do not operate the machine on uneven ground or on a hill side with the roll bar in the down position.**
- **Lower the roll bar only when absolutely necessary.**
- **Do not wear the seat belt when the roll bar is in the down position.**
- **Drive slowly and carefully.**
- **Raise the roll bar as soon as clearance permits.**
- **Check carefully for overhead clearances (i.e., branches, doorways, electrical wires) before driving under any objects and do not contact them.**

Important: **Always use the seat belt when the roll bar is in the raised and locked position. Do not use the seat belt when the roll bar is in the lowered position.**

Lowering the Roll Bar

Important: **Lower the roll bar only when necessary.**

Important: **Ensure that the seat is secured with the seat latch.**

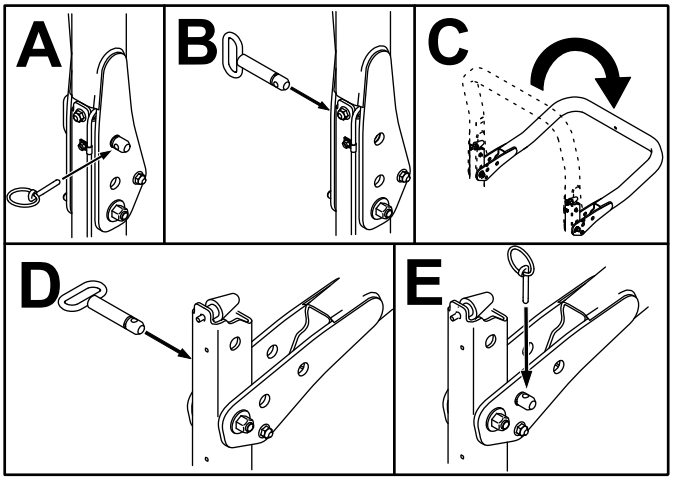

g201853

Figure 22

Raising the Roll Bar

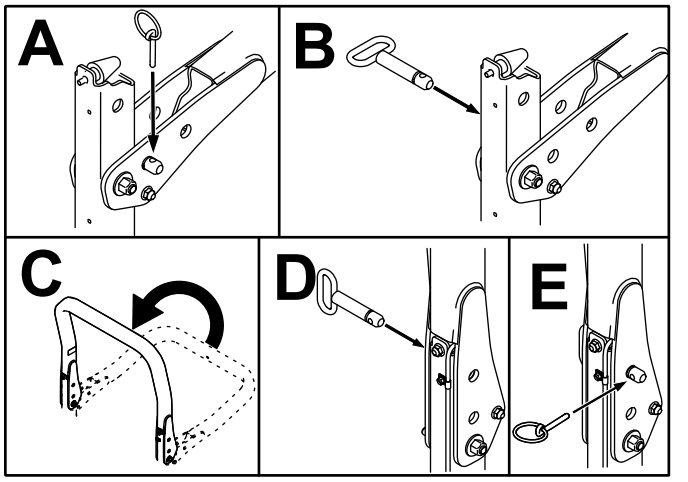

g201854

Figure 23

Adjusting the Height of Cut

Important: **The mower decks often cut approximately 6 mm (1/4 inch) lower than a reel cutting unit with the same bench setting. It may be necessary to set the mower deck's bench 6 mm (1/4 inch) above that of reel cutting units cutting in the same area.**

Important: **Access to the rear mower decks is greatly improved by removing the mower deck from the machine.**

1. Park the machine on a level surface, engage the parking brake, lower the mower deck to the ground, shut off the engine, and remove the key.
2. Loosen the bolt securing each height-of-cut bracket to the height-of-cut plate (front and each side) as shown in Figure 24.
3. Beginning with front adjustment, remove the bolt.

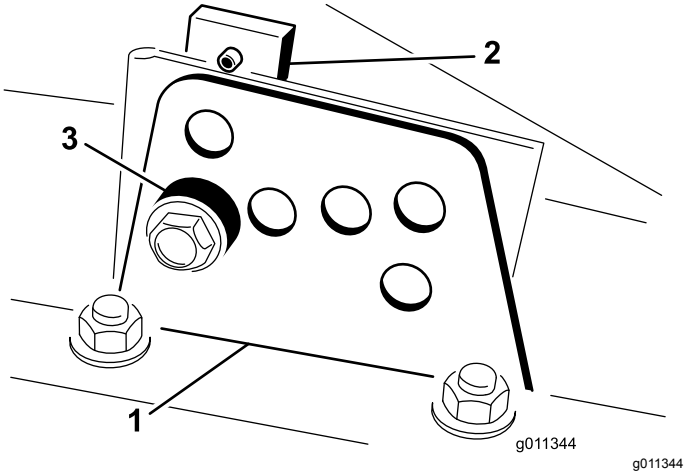

g011344

Figure 24

1. Height-of-cut bracket
2. Height-of-cut plate
3. Spacer

4. While supporting the chamber, remove the spacer (Figure 24).
5. Move the chamber to the desired height of cut and install a spacer into the designated height-of-cut hole and slot (Figure 25).

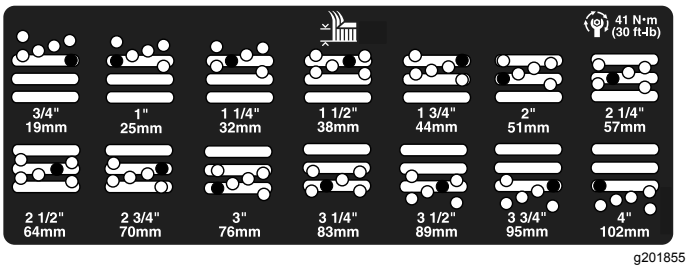

g201855

Figure 25

6. Position the tapped plate in-line with the spacer.

7. Install the bolt finger-tight.
8. Repeat steps 4 through 7 for each side adjustment.
9. Torque all 3 bolts to 41 N·m (30 ft-lb). Always tighten the front bolt first.

   Note: Adjustments of more than 3.8 cm (1-1/2 inches) may require temporary assembly to an intermediate height to prevent binding (e.g., changing from 3.1 to 7 cm (1.25 to 2.75 inches) height of cut).

Checking the Interlock Switches

Service Interval: Before each use or daily

⚠ CAUTION

If safety interlock switches are disconnected or damaged, the machine could operate unexpectedly, causing personal injury.

- **Do not tamper with the interlock switches.**
- **Check the operation of the interlock switches daily and replace any damaged switches before operating the machine.**

The interlock switches are designed to shut off the machine when you rise from the seat when the traction pedal is pressed. However, you may rise from the seat while the engine is running and the traction pedal is in the NEUTRAL position. Although the engine continues to run when you disengage the PTO switch and release the traction pedal, shut off the engine before rising from the seat.

1. Park the machine on a level surface, engage the parking brake, lower the mower decks, and turn the key to the OFF position.
2. Press the traction pedal and turn the key to the ON position.

   Note: If the engine cranks, there is a malfunction in the interlock system. Correct this malfunction before operating the machine.
3. Turn the key to the ON position, rise from the seat, and move the PTO switch to ON.

   Note: The PTO should not engage. If the PTO engages, there is a malfunction in the interlock system. Correct this malfunction before operating the machine.
4. Engage the parking brake, start the engine and allow the glow plugs to heat, then turn the key to the ON position and move the traction pedal out of the NEUTRAL position.

   Note: The InfoCenter displays "traction denied" and the machine should not move. If the machine does move, there is a malfunction in the interlock system. Correct this malfunction before operating the machine.

Checking the Blade-Stopping Time

Service Interval: Before each use or daily

Note: Lower the decks onto a clean section of turf or hard surface to avoid throwing dust and debris.

To verify this stopping time, have someone stand back from the decks at least 6 m (20 ft) and watch the blades on 1 of the mower decks. Disengage the mower decks and record the time it takes for the blades to come to a complete stop. If this time is greater than 7 seconds, adjust the braking valve. Call your Toro Distributor for assistance in making this adjustment.

Selecting a Blade

Standard Combination Sail

This blade provides excellent lift and dispersion in almost any condition. If you require more or less lift and discharge velocity, consider a different blade.

Attributes: Excellent lift and dispersion in most conditions.

Angled Sail

This blade generally performs best in lower heights of cut—1.9 to 6.4 cm (3/4 to 2-1/2 inches).

Attributes:

- Discharge remains more even at lower heights of cut.
- Discharge has less tendency to throw left and thus leaves a cleaner look around bunkers and fairways.
- Lower power is required at lower heights and dense turf.

High-Lift, Parallel Sail

The blade generally performs better in the higher heights of cut—7 to 10 cm (2 to 4 inches).

Attributes:

- It has more lift and a higher discharge velocity.
- Sparse or limp turf is picked up significantly at higher heights of cut.
- Wet or sticky clippings are discharged more efficiently, reducing congestion in the deck.
- It requires more horsepower to run.
- It tends to discharge further left and can tend to windrow at lower heights of cut.

⚠ DANGER

Using the high-lift blade with the mulching baffle could cause the blade to break, resulting in personal injury or death.

Do not use the high-lift blade with the baffle.

Atomic Blade

This blade was designed to provide excellent leaf mulching.

Attributes: Excellent leaf mulching

Choosing Accessories

	Angle Sail Blade	**High-Lift, Parallel-Sail Blade *(Do not use with the mulching baffle)***	**Mulching Baffle**	**Roller Scraper**
Grass Cutting—1.9 to 4.4 cm (0.75 to 1.75 inch) height of cut	Recommended in most applications	May work well in light or sparse turf	Has been shown to improve dispersion and after cut performance on northern grasses that are cut at least 3 times per week and less than 1/3 of the grass blade is removed; ***do not use with the high-lift, parallel-sail blade***	Can be used any time that rollers build up with grass or large flat grass clumps of grass are seen; the scrapers may actually increase clumping in certain applications.
Grass Cutting—5 to 6.4 cm (2.00 to 2.50 inch) height of cut	Recommended for thick or lush turf	Recommended for light or sparse turf		
Grass Cutting—7 to 10 cm (2.75 to 4.00 inch) height of cut	May work well in lush turf	Recommended in most applications		
Leaf Mulching	Recommended for use with the mulching baffle	**Not allowed**	Use with combination sail or angle sail blade only	

Pros	Even discharge at lower height of cut; cleaner look around bunkers and fairways; lower power requirements	More lift and higher discharge velocity; sparse or limp turf is picked up at high height of cut; wet or sticky clippings are discharged efficiently	May improve dispersion and appearance in certain grass cutting applications; very good for leaf mulching	Reduces roller buildup in certain applications
Cons	Does not lift the grass well in high height-of-cut applications; wet or sticky grass has a tendency to buildup in the chamber, leading to poor quality of cut and higher power requirements	Requires more power to run in some applications; tends to windrow at lower height of cut in lush grass; cannot be used with the mulching baffle	Grass will build up in the chamber if attempting to remove too much grass with baffle in place	

During Operation

During Operation Safety

General Safety

- The owner/operator can prevent and is responsible for accidents that may cause personal injury or property damage.
- Wear appropriate clothing, including eye protection; slip-resistant, substantial foot protection; and hearing protection. Tie back long hair and do not wear jewelry.
- Do not operate the machine while ill, tired, or under the influence of alcohol or drugs.
- Never carry passengers on the machine and keep bystanders and pets away from the machine during operation.
- Operate the machine only in good visibility to avoid holes or hidden hazards.
- Avoid mowing on wet grass. Reduced traction could cause the machine to slide.
- Before you start the engine, ensure that all drives are in neutral, the parking brake is engaged, and you are in the operating position.
- Keep your hands and feet away from the cutting units. Keep clear of the discharge opening at all times.
- Look behind and down before backing up to be sure of a clear path.
- Use care when approaching blind corners, shrubs, trees, or other objects that may obscure your vision.
- Stop the blades whenever you are not mowing.
- Stop the machine and inspect the blades after striking an object or if there is an abnormal vibration in the machine. Make all necessary repairs before resuming operation.
- Slow down and use caution when making turns and crossing roads and sidewalks with the machine. Always yield the right-of-way.
- Disengage the drive to the cutting unit and shut off the engine before adjusting the height of cut (unless you can adjust it from the operating position).
- Never run an engine in an area where exhaust gasses are enclosed.
- Never leave a running machine unattended.
- Before leaving the operating position (including to empty the catchers or to unclog the chute), do the following:
  - Park the machine on level ground.
  - Disengage the power take-off and lower the attachments.
  - Engage the parking brake.
  - Shut off the engine and remove the key.
  - Wait for all moving parts to stop.
- Do not operate the machine when there is the risk of lightning.
- Do not use the machine as a towing vehicle.
- Use accessories, attachments, and replacement parts approved by The Toro® Company only.

Rollover Protection System (ROPS) Safety

- **Do not** remove the ROPS from the machine.
- Ensure that the seat belt is attached and that you can release it quickly in an emergency.
- Check carefully for overhead obstructions and do not contact them.
- Keep the ROPS in safe operating condition by thoroughly inspecting it periodically for damage and keeping all the mounting fasteners tight.
- Replace a damaged ROPS. Do not repair or alter it.

Machines with a Foldable Roll Bar

- Always use the seat belt with the roll bar in the raised position.
- The ROPS is an integral safety device. Keep a folding roll bar in the raised and locked position, and use the seat belt when operating the machine with the roll bar in the raised position.
- Lower a folding roll bar temporarily only when necessary. Do not wear the seat belt when the roll bar is folded down.
- Be aware that there is no rollover protection when a folded roll bar is in the down position.
- Check the area that you will be mowing and never fold down a folding roll bar in areas where there are slopes, drop-offs, or water.

Slope Safety

- Establish your own procedures and rules for operating on slopes. These procedures must include surveying the site to determine which slopes are safe for machine operation. Always use common sense and good judgment when performing this survey.
- Slopes are a major factor related to loss-of-control and tip-over accidents, which can result in severe injury or death. Operating the machine on any slope requires extra caution.

- Operate the machine at a lower speed when you are on a slope.
- If you feel uneasy operating the machine on a slope, do not do it.
- Watch for holes, ruts, bumps, rocks, or other hidden objects. Uneven terrain could overturn the machine. Tall grass can hide obstacles.
- Choose a low ground speed so you will not have to stop or shift while on a slope.
- A rollover can occur before the tires lose traction.
- Avoid operating the machine on wet grass. Tires may lose traction; regardless if the brakes are available and functioning.
- Avoid starting, stopping, or turning the machine on a slope.
- Keep all movement on slopes slow and gradual. Do not suddenly change the speed or direction of the machine.
- Do no operate the machine near drop-offs, ditches, embankments, or bodies of water. The machine could suddenly roll over if a wheel goes over the edge or the edge caves in. Establish a safety area between the machine and any hazard (2 machine widths).

Starting the Engine

Important: **Bleed the fuel system if any of the following have occurred:**

- The engine has shut off due to lack of fuel.
- Maintenance has been performed upon the fuel system components.

1. Remove your foot from the traction pedal and ensure that it is in NEUTRAL. Ensure that the parking brake is engaged.
2. Move the throttle control to the low idle position.
3. Turn the key to the RUN position. The glow indicator should light.
4. When the glow indicator dims, turn the key to the START position.

   Important: **Do not run the starter motor more than 15 seconds at a time or premature starter failure may result. If the engine fails to start after 15 seconds, turn the key to the OFF position, check the controls and procedures, wait 15 additional seconds, and repeat the starting procedure.**
5. Release the key immediately when the engine starts and allow it to return to the RUN position.
6. Move the throttle control to the desired position.

   When the temperature is less than -7°C (20°F), the starter motor can be run for 30 seconds on then 60 seconds off for 2 attempts.

   Important: **Shut off the engine and allow the engine to cool before you check for oil leaks, loose parts, or other malfunctions.**

Shutting Off the Engine

Important: **Allow the engine to idle for 5 minutes before shutting it off after a full-load operation. This allows the turbocharger to cool down before shutting off the engine. Failure to do so may lead to turbocharger trouble.**

Note: Lower the mower decks to the ground whenever machine is parked. This relieves the hydraulic load from the system, prevents wear on system parts, and also prevents accidental lowering of the mower decks.

1. Move the throttle control backward to the SLOW position.
2. Move the PTO switch to the OFF position.
3. Engage the parking brake.
4. Rotate the key to the OFF position.
5. Remove the key to prevent accidental starting.

Cutting Grass with the Machine

Note: Cutting grass at a rate that loads the engine promotes DPF regeneration.

1. Move the machine to the job site.
2. Whenever possible, set the engine-speed switch to high idle.
3. Engage the PTO switch.
4. Gradually move the traction pedal forward and slowly drive the machine over the mowing area.
5. Once the front of the cutting units are over the mowing area, lower the cutting units.
6. Cut grass so that the blades can cut and discharge clippings at a high rate while producing a good quality of cut.

   Note: If the cutting rate is too high, the quality of cut may deteriorate. Reduce the ground speed of the machine or reduce the width of cut to regain high idle engine speed.
7. When the cutting units are over the far edge of the mowing area, lift the cutting units.
8. Perform a tear-shaped turn to quickly line up for your next pass.

Diesel Particulate Filter Regeneration

The diesel particulate filter (DPF) is part of the exhaust system. The diesel-oxidation catalyst of the DPF reduces harmful gasses and the soot filter removes soot from the engine exhaust.

The DPF regeneration process uses heat from the engine exhaust to incinerate the soot accumulated on the soot filter, converting the soot to ash, and clears the channels of the soot filter so that filtered engine exhaust flows out the DPF.

The engine computer monitors the accumulation of soot by measuring the back pressure in the DPF. If the back pressure is too high, soot is not incinerating in the soot filter through normal engine operation. To keep the DPF clear of soot, remember the following:

- Passive regeneration occurs continuously while the engine is running—run the engine at full engine speed when possible to promote DPF regeneration.
- If the back pressure is too high, the engine computer signals you through the InfoCenter when additional processes (assist and reset regeneration) are running.
- Allow the assist and reset regeneration process to complete before shutting off the engine.

Operate and maintain your machine with the function of the DPF in mind. Engine load at high idle engine speed generally produce adequate exhaust temperature for DPF regeneration.

Important: **Minimize the amount of time that you idle the engine or operate the engine at low-engine speed to help reduce the accumulation of soot in the soot filter.**

⚠ CAUTION

The exhaust temperature is hot (approximately 600°C (1112°F) during DPF parked regeneration or recovery regeneration. Hot exhaust gas can harm you or other people.

- **Never operate the engine in an enclosed area.**
- **Make sure that there are no flammable materials around the exhaust system.**
- **Never touch a hot exhaust system component.**
- **Never stand near or around the exhaust pipe of the machine.**

DPF Soot Accumulation

- Over time, the DPF accumulates soot in the soot filter. The computer for the engine monitors the soot level in the DPF.
- When enough soot accumulates, the computer informs you that it is time to regenerate the diesel particulate filter.
- DPF regeneration is a process that heats the DPF to convert the soot to ash.
- In addition to the warning messages, the computer reduces the power produced by the engine at different soot-accumulation levels.

Engine Warning Messages—Soot Accumulation

Indication Level	Fault Code	Engine Power Rating	Recommended Action
Level 1: Engine Warning	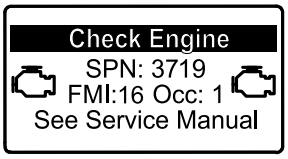 g213866 **Figure 26** Check Engine SPN 3719, FMI 16	The computer de-rates the engine power to 85%	Perform a parked regeneration as soon as possible; refer to Parked Regeneration (page 39).
Level 2: Engine Warning	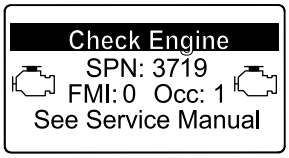 g213867 **Figure 27** Check Engine SPN 3719, FMI 0	The computer de-rates the engine power to 50%	Perform a recovery regeneration as soon as possible; refer to Recovery Regeneration (page 42).

DPF Ash Accumulation

- The lighter ash is discharged through the exhaust system; the heavier ash collects in the soot filter.
- Ash is a residue of the regeneration process. Over time, the diesel particulate filter accumulates ash that does not discharge with the engine exhaust.
- The computer for the engine calculates the amount of ash accumulated in the DPF.
- When enough ash accumulates, the engine computer sends information to the InfoCenter in the form of a system advisory or an engine fault to indicate the accumulation of ash in the DPF.
- The advisory and faults are indications that it is time to service the DPF.
- In addition to the warnings, the computer reduces the power produced by the engine at different ash-accumulation levels.

InfoCenter Advisory and Engine Warning Messages—Ash Accumulation

Indication Level	Advisory or Fault Code	Engine Speed Reduction	Engine Power Rating	Recommended Action
Level 1: System Advisory	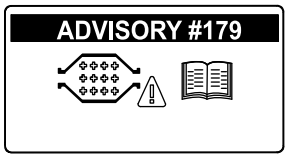 g213865 **Figure 28** Advisory #179	None	100%	Notify your service department that advisory #179 displays in the InfoCenter.
Level 2: Engine Warning	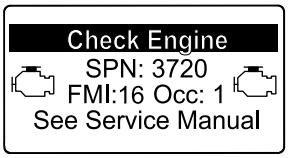 g213863 **Figure 29** Check Engine SPN 3720, FMI 16	None	The computer de-rates the engine power to 85%	Service the DPF; refer to Servicing the Diesel-Oxidation Catalyst (DOC) and the Soot Filter (page 56)
Level 3: Engine Warning	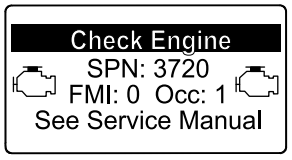 g213864 **Figure 30** Check Engine SPN 3720, FMI 0	None	The computer de-rates the engine power to 50%	Service the DPF; refer to Servicing the Diesel-Oxidation Catalyst (DOC) and the Soot Filter (page 56)
Level 4: Engine Warning	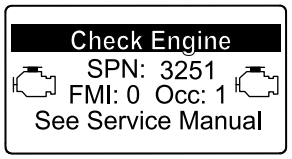 g214715 **Figure 31** Check Engine SPN 3251, FMI 0	Engine speed at max torque + 200 rpm	The computer de-rates the engine power to 50%	Service the DPF; refer to Servicing the Diesel-Oxidation Catalyst (DOC) and the Soot Filter (page 56)

Types of Diesel Particulate Filter Regeneration

Types of diesel particulate filter regeneration that are performed while the machine is operating:

Type of Regeneration	Conditions for DPF regeneration	DPF description of operation
Passive	Occurs during normal operation of the machine at high-engine speed or high-engine load	The InfoCenter does not display an icon indicating passive regeneration. During passive regeneration, the DPF processes high-heat exhaust gasses; oxidizing harmful emissions and burning soot to ash. Refer to Passive DPF Regeneration (page 38).
Assist	Occurs as a result of low-engine speed, low-engine load, or after the computer detects back pressure in the DPF	 When the assist/reset-regeneration icon is displayed in the InfoCenter, an assist regeneration is in progress. During assist regeneration, the computer controls the intake throttle to increase the exhaust temperature, enabling assist regeneration to occur. Refer to Assist DPF Regeneration (page 38).
Reset	Occurs after assist regeneration only if the computer detects that assist regeneration did not sufficiently reduce the soot level Also occurs every 100 hours to reset baseline sensor readings	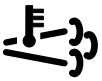 When the assist/reset-regeneration icon is displayed in the InfoCenter, a regeneration is in progress. During reset regeneration, the computer controls the intake throttle and fuel injectors to increase the exhaust temperature during regeneration. Refer to Reset Regeneration (page 39).

Types of diesel particulate filter regeneration that require you to park the machine:

Type of Regeneration	Conditions for DPF regeneration	DPF description of operation
Parked	Soot buildup occurs as a result of prolonged operation at low-engine speed or low-engine load. May also occur as a result of using incorrect fuel or oil The computer detects back pressure due to soot buildup and requests a parked regeneration	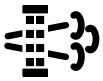 When the parked-regeneration icon is displayed in the InfoCenter, a regeneration is requested. • Perform the parked regeneration as soon as possible to avoid needing a recovery regeneration. • A parked regeneration requires 30 to 60 minutes to complete. • You must have at least a 1/4 tank of fuel in the tank. • You must park the machine to perform a recovery regeneration. Refer to Parked Regeneration (page 39).

Types of diesel particulate filter regeneration that require you to park the machine: (cont'd.)

Type of Regeneration	Conditions for DPF regeneration	DPF description of operation
Recovery	Occurs as a result of ignoring parked regeneration requests and continuing operation, adding more soot when the DPF is already in need of a parked regeneration	When the recovery-regeneration icon 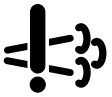 is displayed in the InfoCenter, a recovery regeneration is requested. Contact your Authorized Toro Distributor to have a service technician perform the recovery regeneration. • A recovery regeneration requires up to 4 hours to complete. • You must have at least a 1/2 tank of fuel in the machine. • You must park the machine to perform a recovery regeneration. Refer to Recovery Regeneration (page 42).

Passive DPF Regeneration

- Passive regeneration occurs as part of normal engine operation.
- While operating the machine, run the engine at full-engine speed when possible to promote DPF regeneration.

Assist DPF Regeneration

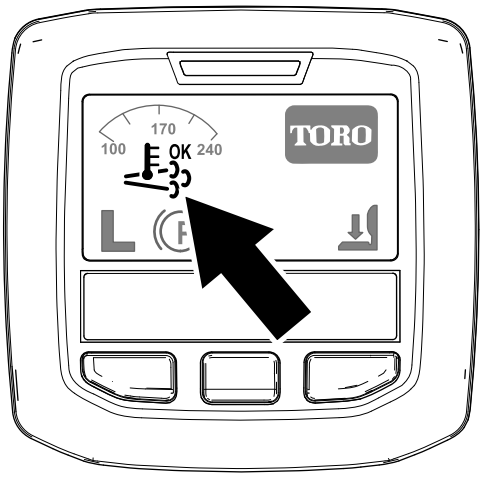

g214711

Figure 32
Assist/reset-regeneration icon

- The assist/reset-regeneration icon displays in the InfoCenter (Figure 32).
- The computer takes control of the intake throttle to increase the temperature of the engine exhaust.
- While operating the machine, run the engine at full engine speed when possible to promote DPF regeneration.
- The 

icon displays in the InfoCenter while the assist regeneration is processing.
- Whenever possible, do not shut off the engine or reduce engine speed while the assist regeneration is processing.

Important: **Allow the machine to complete the assist regeneration process before shutting off the engine.**

Note: The assist regeneration is finished processing when the 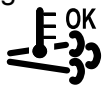

icon disappears from the InfoCenter.

Reset Regeneration

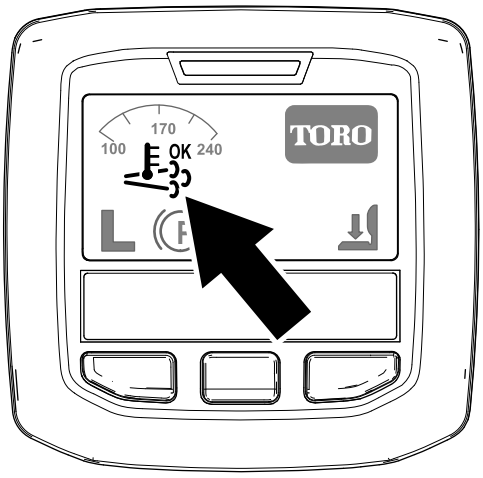

g214711

Figure 33
Assist/reset-regeneration icon

- The assist/reset-regeneration icon displays in the InfoCenter (Figure 33).
- The computer takes control of the intake throttle and changes the fuel injection operation to increase the temperature of the engine exhaust.

  Important: **The assist/reset-regeneration icon indicates that the exhaust temperature discharged from of your machine may be hotter than during regular operation.**
- While operating the machine, run the engine at full engine speed when possible to promote DPF regeneration.
- The 

icon displays in the InfoCenter while the reset regeneration is processing.
- Whenever possible, do not shut off the engine or reduce engine speed while the reset regeneration is processing.

  Important: **Allow the machine to complete the reset regeneration process before shutting off the engine.**

  Note: The reset regeneration is finished processing when the 

icon disappears from the InfoCenter.

Parked Regeneration

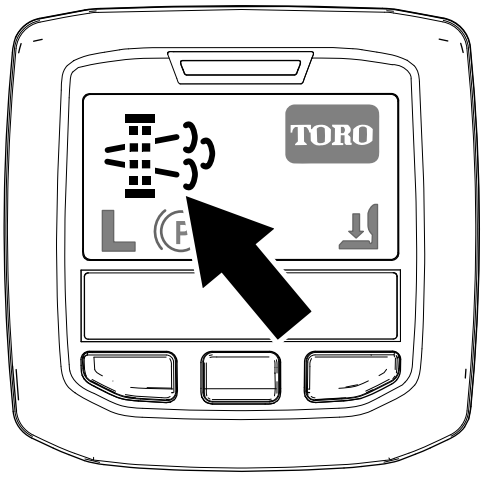

g214713

Figure 34
Parked-regeneration request icon

- The parked-regeneration requested icon displays in the InfoCenter (Figure 34).
- If a parked regeneration is needed, the InfoCenter displays engine warning SPN 3719, FMI 16 (Figure 35) and the engine computer derates engine power to 85%.

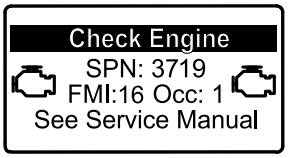

g213866

Figure 35

Important: **If you do not complete a parked regeneration within 2 hours, the engine computer derates engine power to 50%.**

- A parked regeneration requires 30 to 60 minutes to complete.
- If you are authorized by your company, you need the PIN code to perform the parked-regeneration process.

Preparing to Perform a Parked or Recovery Regeneration

1. Ensure that the machine has at least 1/4 tank of fuel.
2. Move the machine outside to an area away from combustible materials.
3. Park the machine on a level surface.
4. Ensure that the traction control or motion-control levers are in the NEUTRAL position.
5. If applicable, lower the cutting units and shut them off.

6. Engage the parking brake.
7. Set the throttle to the low IDLE position.

Performing a Parked Regeneration

Note: For instructions on unlocking protected menus, refer to Accessing Protected Menus (page 21).

1. Access the protected menu and unlock the protected settings submenu (Figure 36); refer to Accessing Protected Menus (page 21).

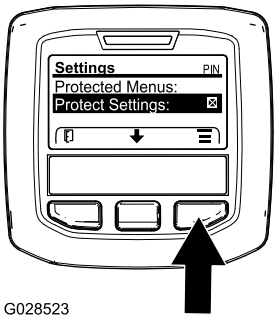

G028523

g028523

Figure 36

2. Navigate to the MAIN MENU, press the center button to scroll down to the SERVICE MENU, and press the right button to select the SERVICE option (Figure 37).

   Note: The InfoCenter should display the PIN indicator in the upper right corner of the display.

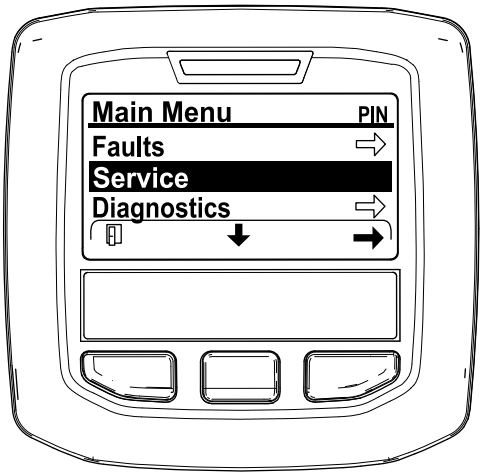

g212371

Figure 37

3. In the SERVICE MENU, press the middle button until the DPF REGENERATION options displays, and press the right button to select the DPF REGENERATION option (Figure 38).

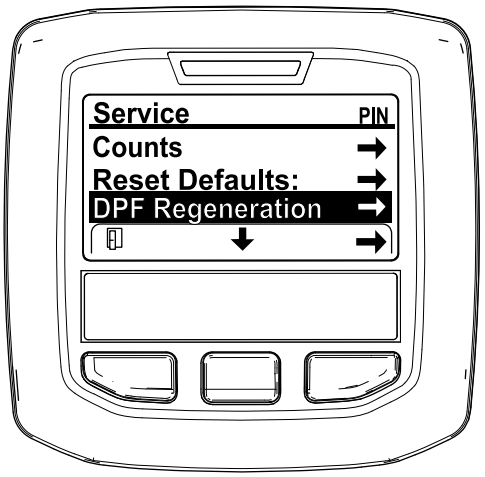

g212138

Figure 38

4. When the “Initiate DPF Regen. Are you sure?” message displays, press the center button (Figure 39).

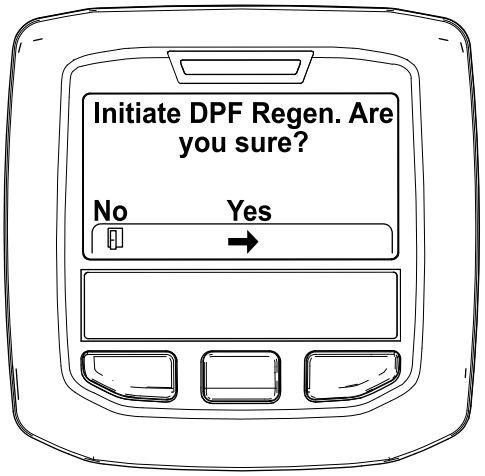

g212125

Figure 39

5. If the coolant temperature is below 60°C (140°F) the “Insure is running and above 60C/140F” message displays. (Figure 40).

   Observe the temperature in the display, and run the machine at full throttle until the temperature reaches 60°C (140°F), then press the center button.

   Note: If the coolant temperature is above 60°C (140°F) this screen is skipped.



g211986

Figure 40

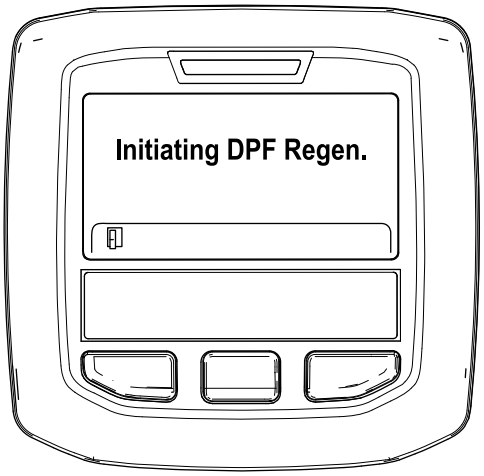

g212405

Figure 42

6. Move the throttle control to LOW IDLE and press the center button (Figure 41).

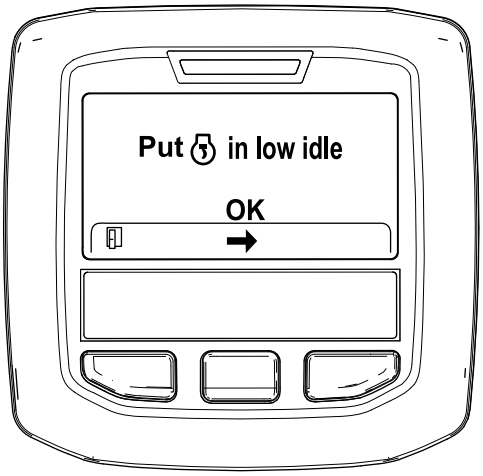

g212372

Figure 41

7. The following messages display as the parked regeneration process begins:
   A. The “Initiating DPF Regen.” message displays (Figure 42).
   B. The “Waiting on ” message displays (Figure 43).

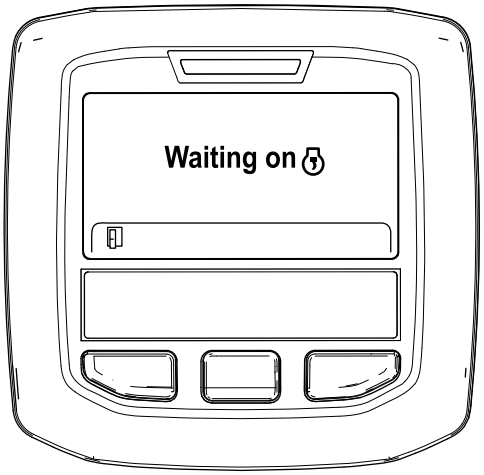

g212406

Figure 43

   C. The computer determines whether the regeneration runs. One of the following messages displays in the InfoCenter:
      - If the regeneration is allowed, the “Regen Initiated. Allow up to 30 minutes for completion” message displays in the InfoCenter, wait for the machine to complete the parked regeneration process (Figure 44).

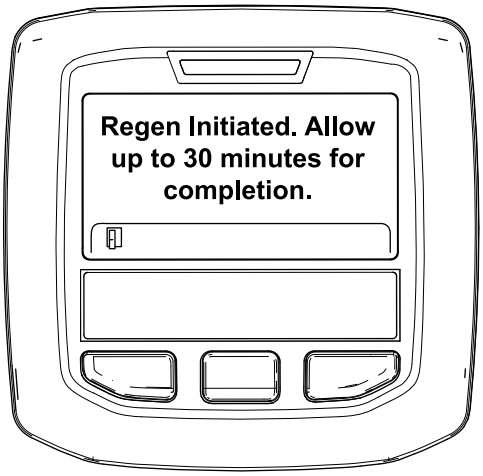

g213424

Figure 44

- If the regeneration process is not allowed by the engine computer, the “DPF Regen Not Allowed” message displays in the InfoCenter (Figure 45). Press the left button to exit to the home screen

  Important: **If you did not meet all the requirements for regeneration or if less than 50 hours have passed since the last regeneration, the “DPF Regen Not Allowed” message appears.**

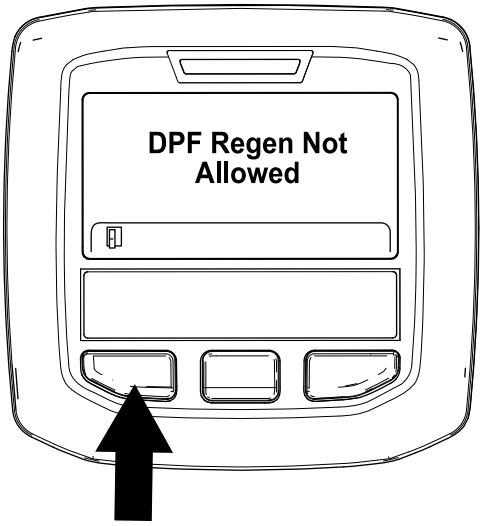

g212410

Figure 45

8. While the regeneration is running, the InfoCenter returns to the home screen and shows the following icons:



The engine is cold—wait.



The engine is warm—wait.



The engine hot—regeneration in progress (percent complete).

9. The parked regeneration is complete when the “Regen Complete” message displays in the InfoCenter. Press the left button to exit to the home screen (Figure 46).

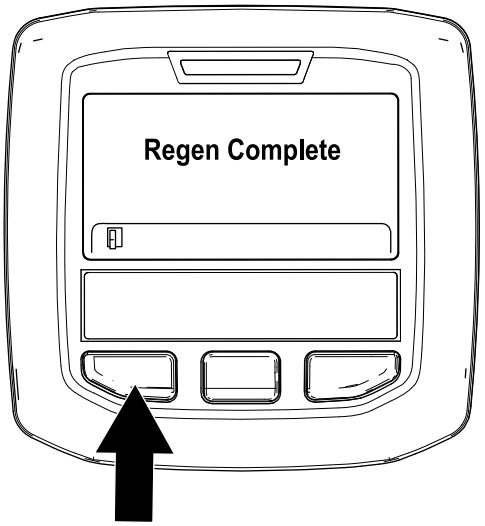

g212404

Figure 46

Recovery Regeneration

- If you ignore the request for a parked regeneration (displayed in the InfoCenter) and continue to operate the machine, a critical amount of soot builds up in the DPF.
- If a recovery regeneration is needed, the InfoCenter displays engine warning SPN 3719, FMI 16 (Figure 47) and the engine computer derates engine power to 85%.

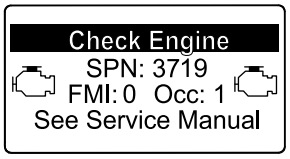

g213867

Figure 47

Important: **If you do not complete a recovery regeneration within 15 minutes, the engine computer derates engine power to 50%.**

- Perform a recovery-regeneration whenever there is a loss of engine power and a parked regeneration cannot effectively clean the DPF of soot.
- A recovery regeneration requires up to 4 hours to complete.
- You need a distributor technician to perform the recovery regeneration process; contact your Authorized Toro Distributor.

Understanding the Operating Characteristics of the Machine

Practice driving the machine because it has a hydrostatic transmission and its characteristics are different than many turf maintenance machines. Some points to consider when operating the machine and mower decks are the transmission, engine speed, load on the cutting blades and the importance of the brakes.

With Toro Smart Power™, the operator does not have to listen to the engine speed in heavy conditions. Smart Power prevents bogging down in heavy turf by automatically controlling the machine speed and optimizing cutting performance.

Another characteristic to consider is the operation of the pedals that are connected to the brakes. The brakes can be used to assist in turning the machine. However, use them carefully, especially on soft or wet grass because the turf may be torn accidentally. Another benefit of the brakes is to maintain traction. For example, in some slope conditions, the uphill wheel slips and loses traction. If this situation occurs, depress the uphill turn pedal gradually and intermittently until the uphill wheel stops slipping, thus, increasing traction on the downhill wheel.

Use extra care when operating the machine on slopes. Make sure that the seat latch is properly secured and the seat belt is buckled. Drive slowly and avoid sharp turns on slopes to prevent rollovers. For steering control, the mower decks must be lowered when going downhill.

Important: **Allow engine to idle for 5 minutes before shutting it off after a full load operation. This allows the turbo charger to cool down before shutting the engine off. Failure to do so may lead to turbo-charger trouble.**

Before shutting off the engine, disengage all controls and set the engine speed to slow. Setting the engine speed to slow reduces high engine rpm, noise, and vibration. Turn the key to the OFF position to shut off the engine.

Operating the Engine-Cooling Fan

The engine cooling fan is normally controlled by the machine. The machine has the ability to reverse the fan to blow debris off the rear screen. Under normal operating conditions, the machine controls the fan speed and direction based on coolant and hydraulic-fluid temperature, and the fan automatically reverses direction to blow debris off the rear screen. A reverse cycle is automatically initiated when either the coolant or hydraulic-fluid temperature reaches a specific temperature.

You can manually reverse the fan by pressing the 2 outer buttons of the InfoCenter for 2 seconds—the fan completes a manually initiated reverse cycle. Reverse the fan when the rear screen is clogged or prior to moving the machine into the shop or a storage area.

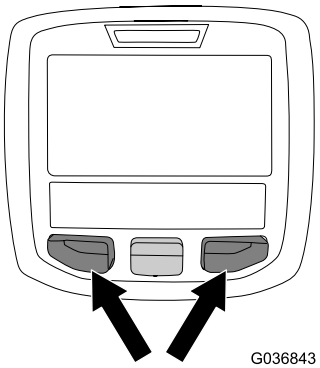

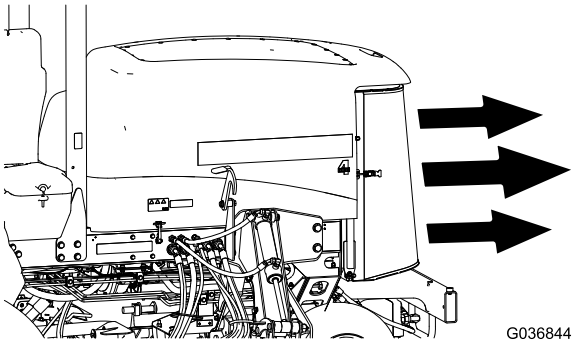

Figure 48

Using Cruise Control

The cruise-control switch locks in the pedal position to maintain the desired ground speed. Pressing the rear of the switch turns the cruise control off, the middle position of the switch enables the cruise-control function, and the front of the switch sets the desired ground speed.

Note: Pressing either the brake pedal or moving the traction pedal into the REVERSE position, for 1 second, also disengages the pedal position.

Using the Transport Latches

Groundsmaster 4700 Only

Use the 2 rear-transport latches for the No. 6 and 7 mower decks when moving the machine over long distances, rough terrain, when transporting, or storing the machine.

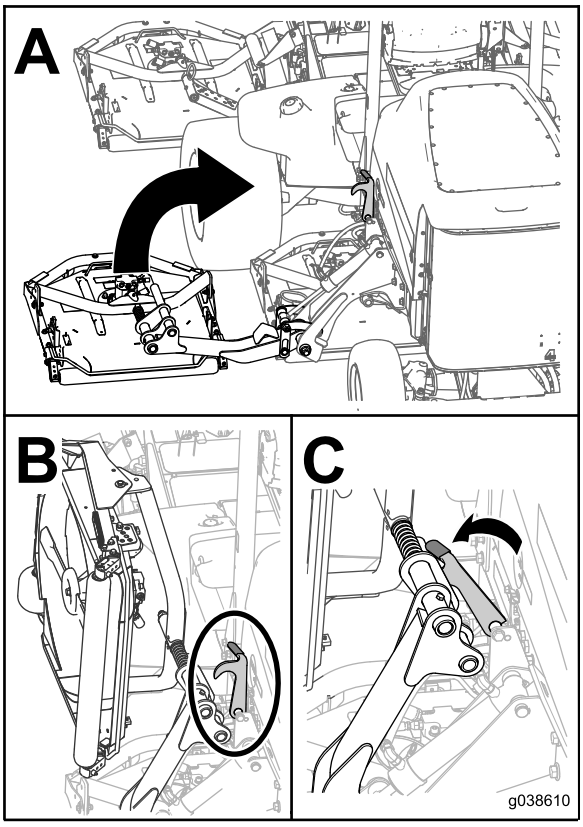

g038610

Figure 49

Operating Tips

Operating the Machine

- Start the engine. If the AUTO IDLE function is turned off, run it at HALF IDLE until it warms up. Run the engine at HIGH IDLE, lift the mower decks, disengage the parking brake, press the forward traction pedal, and carefully drive to an open area.
- Practice moving forward and reverse, and starting and stopping the machine. To stop the machine, remove your foot from the traction pedal and let it return to NEUTRAL or press down on the reverse pedal.

  Note: When going downhill in the machine, you may need to use the reverse pedal to stop.
- When possible, mow up and down hills rather than across them. Have the mower decks lowered when going down a hill to maintain steering control. Do not attempt to turn the machine on a hill.
- Practice driving around obstacles with the mower decks up and down. Be careful when driving between narrow objects so that you do not damage the machine or mower decks.
- Always drive slowly in rough areas.
- If an obstacle is in the way, lift the mower decks to mow around it.
- When transporting the machine from 1 work area to another, raise the mower decks to the fully upward position, shut off the PTO, press the mow/transport switch to the TRANSPORT position, and place the throttle in the FAST position.

Changing Mowing Patterns

Change mowing patterns often to minimize a poor after-cut appearance from repeatedly mowing in the same direction.

Understanding Counterbalance

The counterbalance system maintains hydraulic back pressure on the deck-lift cylinders. This counterbalance pressure transfers mower deck weight to the mower drive wheels to improve traction. The counterbalance pressure has been set at the factory to an optimal balance of after-cut appearance and traction capability in most turf conditions. Decreasing the counterbalance setting can produce a more stable mower deck, but can decrease the traction capability. Increasing the counterbalance setting can increase the traction capability, but may result in a poor after-cut appearance; refer to Setting the Counterbalance (page 22).

Resolving After-Cut Appearance

Reference the After-cut Appearance Troubleshooting Guide available at www.Toro.com.

Using Proper Mowing Techniques

- To begin cutting, engage the mower decks, then approach the mowing area slowly. Once the front mower decks are over the mowing area, lower the mower decks.
- To achieve the professional straight-line cut and striping that is desirable for some applications, find a tree or other object in the distance and drive straight toward it.
- As soon as the front mower decks reach the edge of the mowing area, lift the mower decks, and perform a teardrop-shaped turn to quickly line up for your next pass.
- Bolt-in mulching baffles are available for the mower decks. The mulching baffles perform well when you maintain turf on a regular schedule to avoid removing more than 25 mm (1 inch) of growth per cutting. When you cut too much growth with the mulching baffles installed, the after-cut appearance may deteriorate and the observed power to cut the turf increases. The mulching baffles also perform well for shredding leaves in the fall.

Mowing When the Grass Is Dry

Mow either in the late morning to avoid the dew, which causes grass clumping, or late afternoon to avoid the damage that direct sunlight can cause on the sensitive, freshly mowed grass.

Selecting the Proper Height-of-Cut Setting to Suit Conditions

Remove no more than approximately 25 mm (1 inch), or 1/3 of the grass blade when cutting. In exceptionally lush and dense grass, you may need to raise your height-of-cut setting.

Mowing with Sharp Blades

A sharp blade cuts cleanly and without tearing or shredding the grass blades like a dull blade. Tearing and shredding causes the grass to turn brown at the edges, which impairs growth and increases susceptibility to diseases. Ensure that the blade is in good condition and that there is a full sail.

Checking the Condition of the Mower Deck

Ensure that the cutting chambers are in good condition. Straighten any bends in the chamber components to ensure correct blade tip/chamber clearance.

Maintaining the Machine after Mowing

After mowing, thoroughly wash the machine with a garden hose with no nozzle to avoid contamination and damage to the seals and bearings caused by excessive water pressure. Ensure that the radiator and oil cooler are kept free of dirt or grass clippings. After cleaning, inspect the machine for possible hydraulic-fluid leaks, damage, or wear to the hydraulic and mechanical components, and check the mower-deck blades for sharpness.

After Operation

After Operation Safety

- Clean grass and debris from the cutting units, mufflers, and engine compartment to help prevent fires. Clean up oil or fuel spills.
- If the cutting units are in the transport position, use the positive mechanical lock (if available) before you leave the machine unattended.
- Allow the engine to cool before storing the machine in any enclosure.
- Shut off the fuel before storing or transporting the machine.
- Never store the machine or fuel container where there is an open flame, spark, or pilot light, such as on a water heater or on other appliances.
- Keep all parts of the machine in good working condition and all hardware tightened, especially blade-attachment hardware.
- Replace all worn or damaged decals.

Hauling the Machine

- Use care when loading or unloading the machine into a trailer or a truck.
- Use full-width ramps for loading the machine into a trailer or a truck.
- Tie the machine down securely.

Pushing or Towing the Machine

In an emergency, the machine can be moved forward by actuating the bypass valve in the variable-displacement hydraulic pump and pushing or towing the machine.

Important: **Do not push or tow the machine faster than 3 to 4.8 km/h (2 to 3 mph), because internal-transmission damage may occur. The bypass valves must be open whenever you push or tow the machine.**

1. Open the hood and locate the bypass valves (Figure 50) on the top of pump, behind the battery/storage boxes.
2. Rotate each valve 3 turns counter-clockwise to open and allow oil to bypass internally.

   Note: Do not open more than 3 turns. Because fluid is bypassed, the machine can be slowly moved without damaging the transmission.

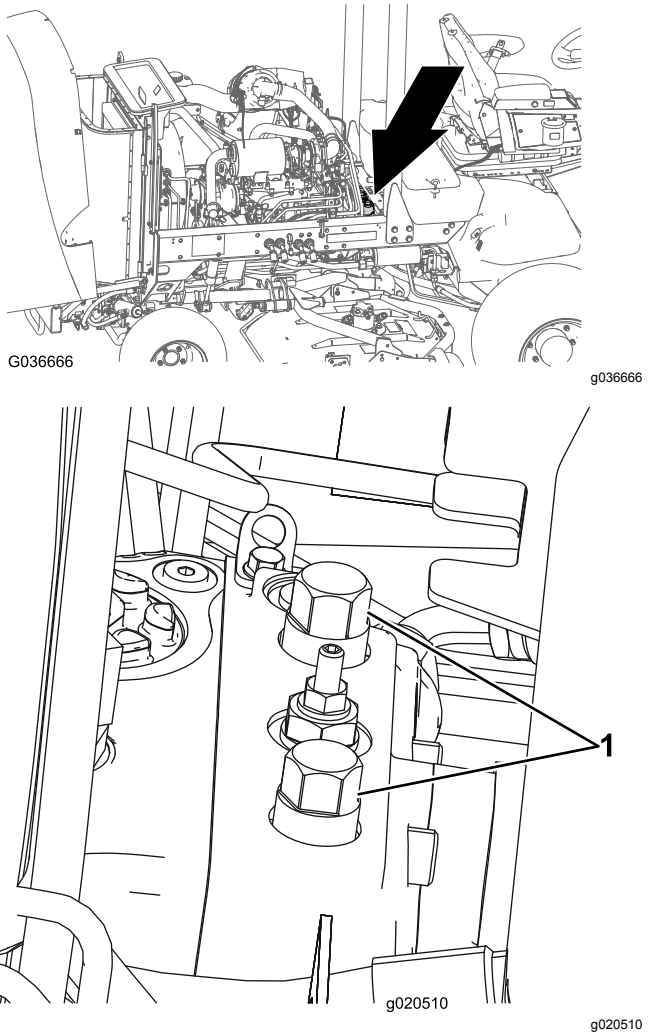

Figure 50

1. Bypass valve (2)

3. Close the bypass valves before starting the engine. Torque to 70 N·m (52 ft-lb) to close the valve.

Important: **If you must push or tow the machine in reverse, the check valve in the 4-wheel drive manifold must also be bypassed. To bypass the check valve, connect a hose assembly (Part No. 95-8843), 2 coupler fittings (Part No. 95-0985), and 2 hydraulic fittings (Part No. 340-77) to the reverse-traction, pressure test port, located on the hydrostat, and on the port located between ports M8 and P2 on the rear traction manifold, which is located to the inside of the front, rear tire.**

Locating the Tie-Down Points

Note: Use properly-rated DOT-approved straps in 4 corners to tie down the machine.

- On each side of the frame by the operator's platform
- On the rear bumper

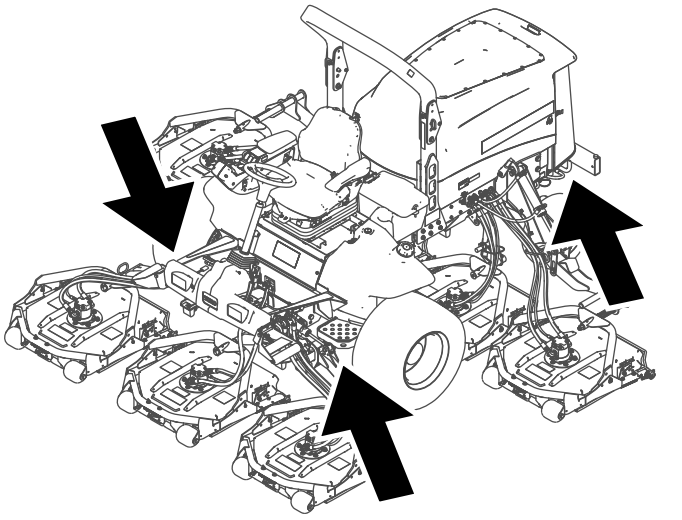

g208989

Figure 51

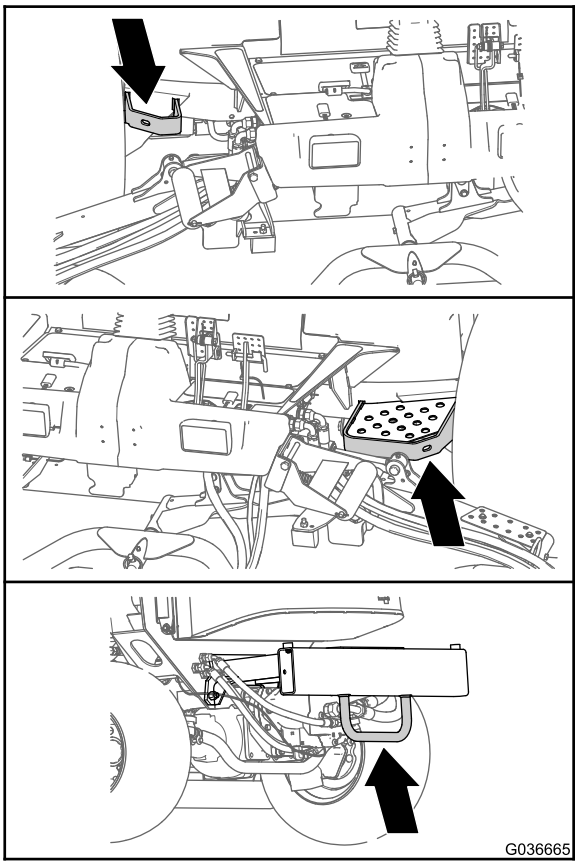

g036665

Figure 52

Maintenance

Important: **Refer to your engine owner's manual for additional maintenance procedures.**

Note: Download a free copy of the electrical or hydraulic schematic by visiting www.Toro.com and searching for your machine from the Manuals link on the home page.

Note: Determine the left and right sides of the machine from the normal operating position.

Recommended Maintenance Schedule(s)

Maintenance Service Interval	Maintenance Procedure
After the first hour	• Torque the wheel-lug nuts.
After the first 10 hours	• Torque the wheel-lug nuts.
After the first 50 hours	• Change the engine oil and filter.
After the first 200 hours	• Change the front planetary-gear oil. • Change the rear-axle lubricant. • Change the hydraulic filters.
Before each use or daily	• Check the tire pressure. • Check the interlock switches. • Check the blade stopping time. • Check the engine-oil level. • Drain water or other contaminants from the water separator. • Drain water or other contaminants from the fuel filter/water separator. • Check the rear axle and rear-axle gearbox for leaks. • Check level of coolant at the beginning of each day. • Remove debris from the engine area, oil cooler, and radiator. • Check the hydraulic-fluid level. • Inspect the hydraulic lines and hoses for leaks, kinked lines, loose mounting supports, wear, loose fittings, weather deterioration, and chemical deterioration.
Every 50 hours	• Grease the bearings and bushings. (And after every washing). • Check the battery condition.
Every 100 hours	• Check the condition and tension of the alternator belt.
Every 200 hours	• Torque the wheel-lug nuts.
Every 250 hours	• Change the engine oil and filter.
Every 400 hours	• Service the air cleaner (earlier if the air cleaner indicator shows red, and more frequently in extremely dirty or dusty conditions). • Inspect the fuel lines and connections. • Replace the fuel-filter canister. • Replace the engine fuel filter. • Check for end-play in the planetary drives. • Check the planetary-gear-drive oil (check if you notice external leakage). • Check for end-play in the planetary drives. • Check the rear-axle lubricant. • Check the rear-axle-gear-box lubricant.
Every 800 hours	• Drain and clean the fuel tank. • Change the front planetary-gear oil or yearly, whichever comes first. • Change the rear-axle lubricant. • Check the rear wheel toe-in. • Change the hydraulic fluid. • Change the hydraulic filters.

Maintenance Service Interval	Maintenance Procedure
Every 6,000 hours	• Disassemble, clean, and assemble the soot filter of the DPF. or clean the soot filter if engine faults SPN 3720 FMI 16, SPN 3720 FMI 0, or SPN 3720 FMI 16 display in the InfoCenter.
Before storage	• Drain and clean the fuel tank. • Check the tire pressure. • Check all fasteners. • Grease or oil all grease fittings and pivot points. • Paint chipped surfaces.
Yearly	• Inspect the fuel lines and connections.

⚠ CAUTION

If you leave the key in the key switch, someone could accidently start the engine and seriously injure you or other bystanders.

Remove the key before you do any maintenance.

Daily Maintenance Checklist

Duplicate this page for routine use.

Maintenance Check Item	For the week of:						
	Monday	Tuesday	Wednesday	Thursday	Friday	Saturday	Sunday
Check the safety-interlock operation.							
Check the brake operation.							
Check the engine-oil level.							
Check the cooling-system-fluid level.							
Drain the water/fuel separator.							
Check the air filter, dust cup, and burp valve.							
Check for unusual engine noises.[2]							
Check the radiator and screen for debris							
Check for unusual operating noises.							
Check the hydraulic-fluid level.							
Check the hydraulic hoses for damage.							
Check for fluid leaks.							
Check the fuel level.							
Check the tire pressure.							
Check the instrument operation.							
Check the height-of-cut adjustment.							

Maintenance Check Item	For the week of:						
	Monday	Tuesday	Wednesday	Thursday	Friday	Saturday	Sunday
Lubricate all the grease fittings.[2]							
Touch up any damaged paint.							

[1]Check the glow plug and injector nozzles if starting is hard, there is excess smoke, or rough running is noted.

[2]Immediately **after every** washing, regardless of the interval listed.

Important: **Refer to your engine operator's manual for additional maintenance procedures.**

Notation for Areas of Concern

Inspection performed by:		
Item	**Date**	**Information**

Service Interval Chart

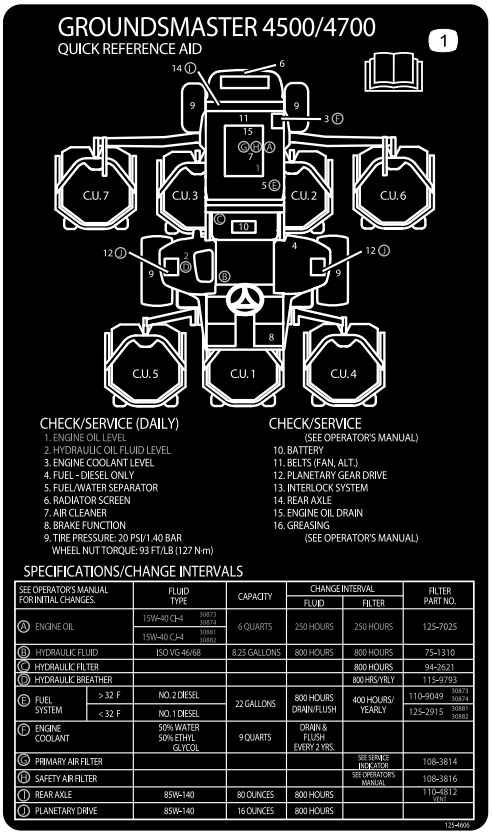

decal125-4606

Figure 53

Pre-Maintenance Procedures

Pre-Maintenance Safety

- Before adjusting, cleaning, repairing, or leaving the machine, do the following:
  - Park the machine on a level surface.
  - Move the throttle switch to the low-idle position.
  - Disengage the cutting units.
  - Lower the cutting units.
  - Ensure that the traction is in neutral.
  - Engage the parking brake.
  - Shut off the engine and remove the key.
  - Wait for all moving parts to stop.
  - Allow machine components to cool before performing maintenance.
- If the cutting units are in the transport position, use the positive mechanical lock (if available) before you leave the machine unattended.
- If possible, do not perform maintenance while the engine is running. Keep away from moving parts.
- Use jack stands to support the machine or components when required.
- Carefully release pressure from components with stored energy.

Preparing the Machine for Maintenance

1. Ensure that the PTO is disengaged.
2. Park the machine on a level surface.
3. Engage the parking brake.
4. Lower the cutting unit(s) if necessary.
5. Shut off the engine and wait for all moving parts to stop.
6. Turn the key to the STOP position and remove it.
7. Allow machine components to cool before performing maintenance.

Lifting the Machine

Use the following as points to lift the machine:

Front of the machine—at the frame of the machine, forward of the wheel-drive motors (Figure 54)

Important: **Do not support the machine at the wheel-drive motors. Keep the lifting equipment clear of hydraulic tubing and hoses.**

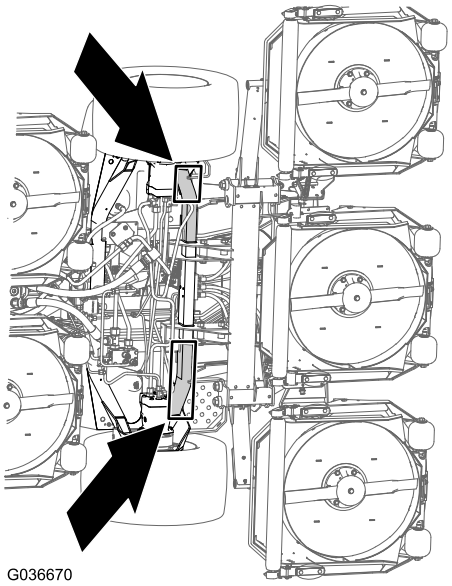

Figure 54

Rear of the machine—at the center of the axle (Figure 55)

Locate the jackstands of the specified capacity at both sides of the gear case and under the axle.

Important: **Do not support the machine at the tie rod.**

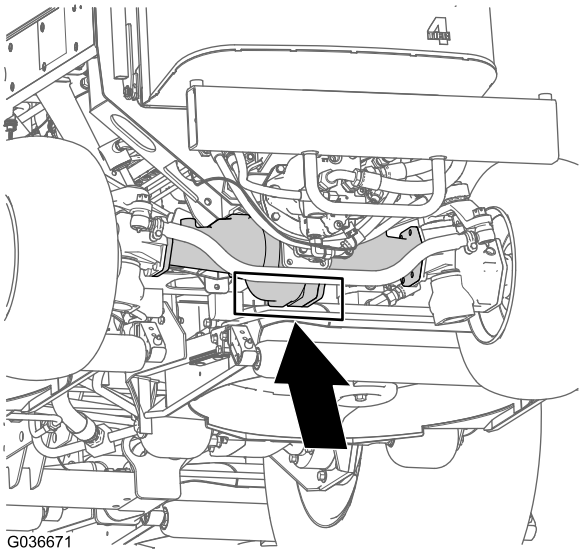

Figure 55

Opening the Hood

Tilt the hood to access the chassis as shown in Figure 56.

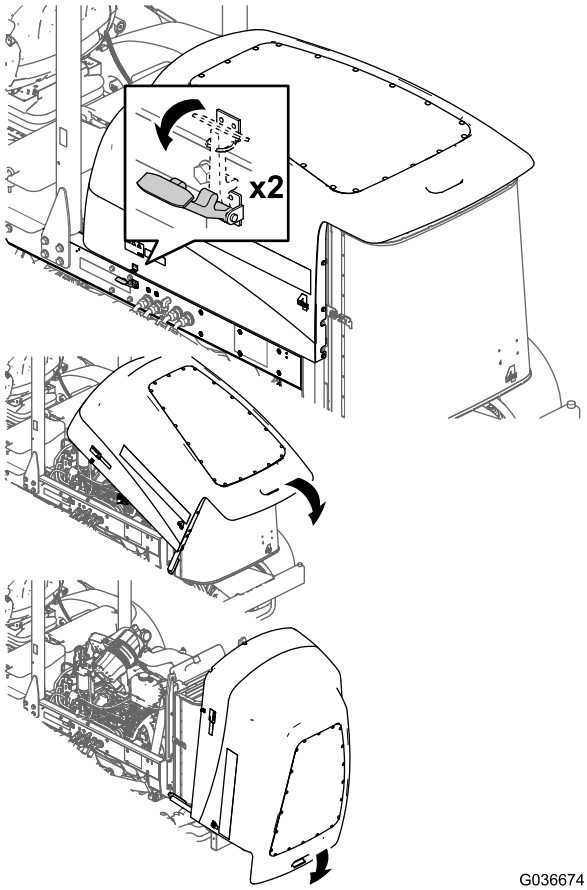

Figure 56

Accessing the Hydraulic Lift Compartment

Tilt the seat to access the hydraulic lift compartment as shown in Figure 57.

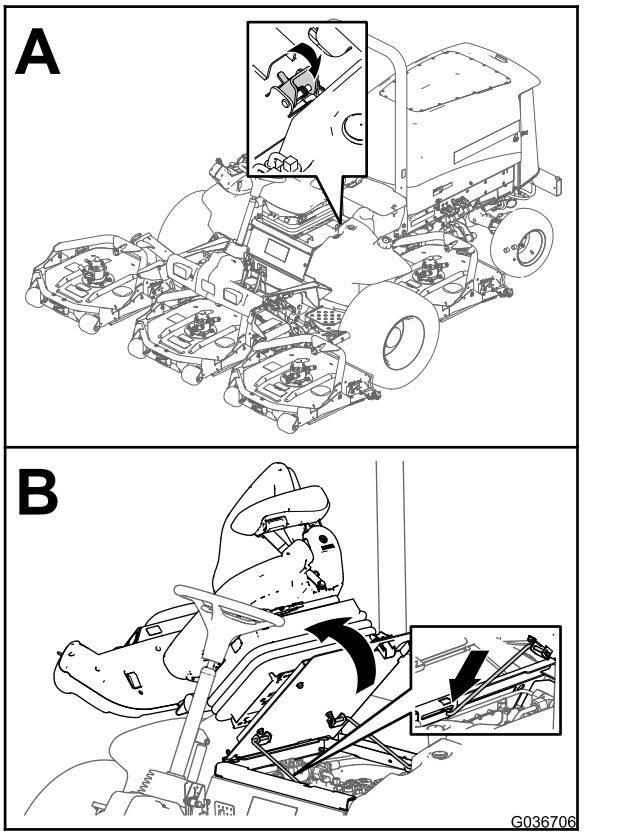

Figure 57

Greasing the Bearings and Bushings

Service Interval: Every 50 hours (And after every washing).

Grease specification: No. 2 lithium grease

The grease fitting locations and quantities are as follows:

- Brake-shaft pivot bearings (5) as shown in Figure 58

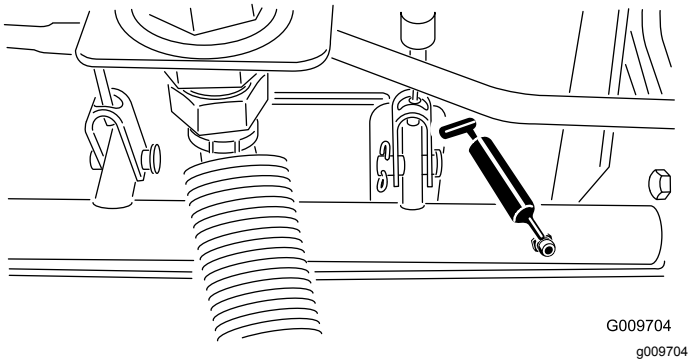

Figure 58

- Rear-axle-pivot bushings (2) as shown in Figure 59)

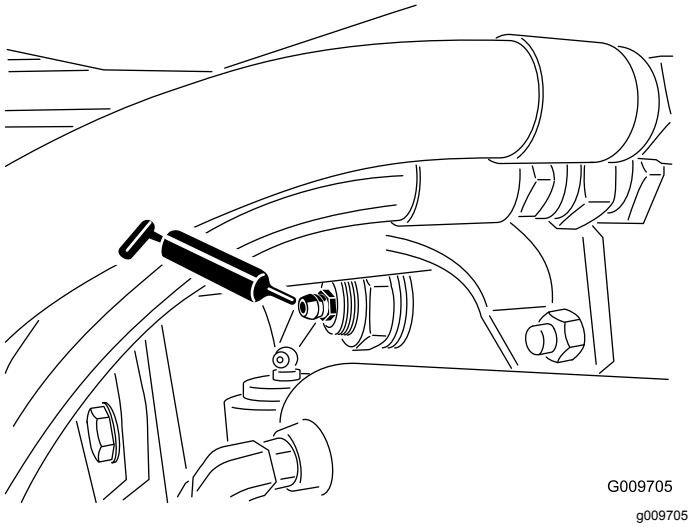

Figure 59

- Steering-cylinder ball joints (2) as shown in Figure 60

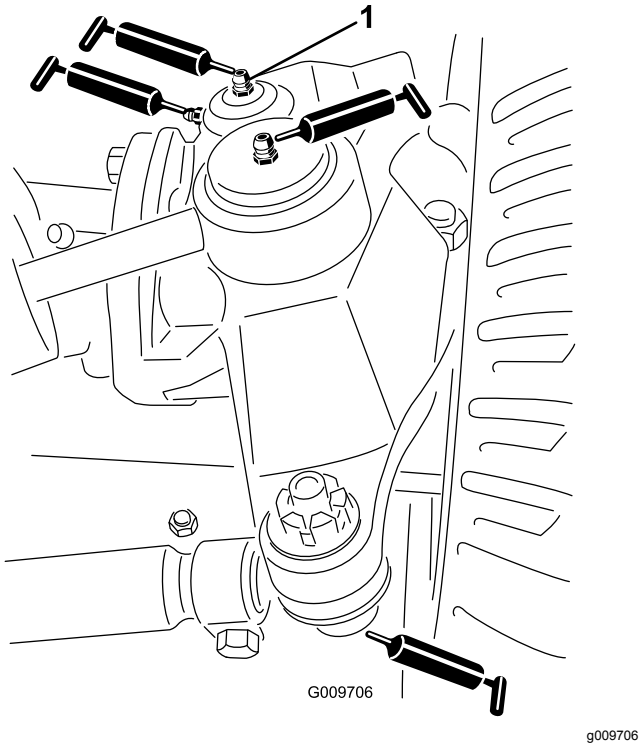

Figure 60

1. Top fitting on kingpin

- Tie-rod ball joints (2) as shown in Figure 60
- Kingpin bushings (2) as shown in Figure 60

Important: **The top fitting on the kingpin should only be lubricated annually (2 pumps).**

- Lift-arm bushings (1 per deck) as shown in Figure 61

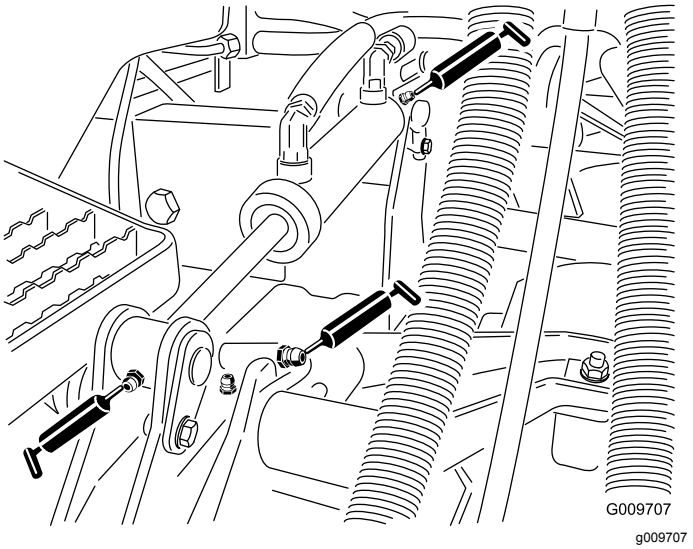

Figure 61

- Lift-cylinder bushings (2 per deck) as shown in Figure 61

- Cutting-unit spindle-shaft bearings (2 per mower deck) as shown in Figure 62

  Note: You can use either fitting, whichever is more accessible. Pump grease into the fitting until a small amount appears at the bottom of the spindle housing (under the deck).

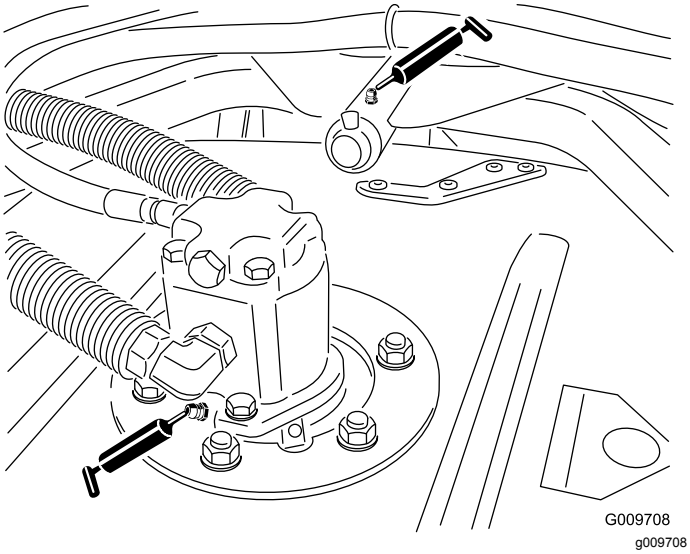

Figure 62

- Cutting-unit carrier-arm bushings (1 per mower deck) as shown in Figure 62
- Rear roller bearings (2 per mower deck) as shown in Figure 63

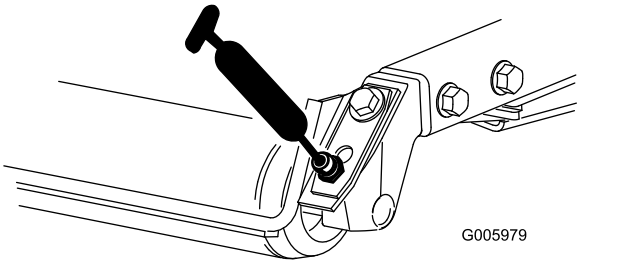

Figure 63

Important: **Make sure that the grease groove in each roller mount aligns with the grease hole in each end of the roller shaft. To help align the groove and the hole, there is also an alignment mark on 1 end of the roller shaft.**

Engine Maintenance

Engine Safety

- Shut off the engine before checking the oil or adding oil to the crankcase.
- Do not change the governor speed or overspeed the engine.

Servicing the Air Cleaner

Service Interval: Every 400 hours

Check the air-cleaner body for damage which could cause an air leak. Replace it if it is damaged. Check the whole intake system for leaks, damage, or loose hose clamps.

Service the air-cleaner filter only when the service indicator (Figure 64) requires it. Changing the air filter before it is necessary only increases the chance of dirt entering the engine when you remove the filter.

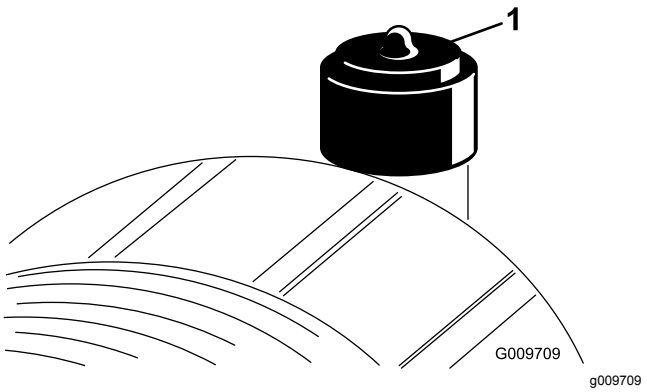

Figure 64

1. Air-cleaner indicator

Important: **Be sure that the cover is seated correctly and seals with the air-cleaner body.**

1. Replace the air cleaner (Figure 65).

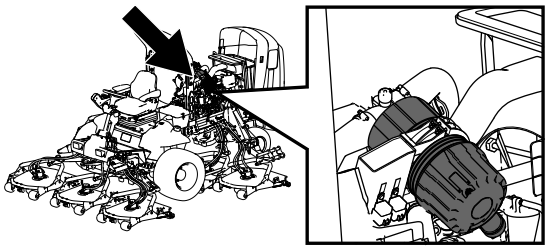

g198631

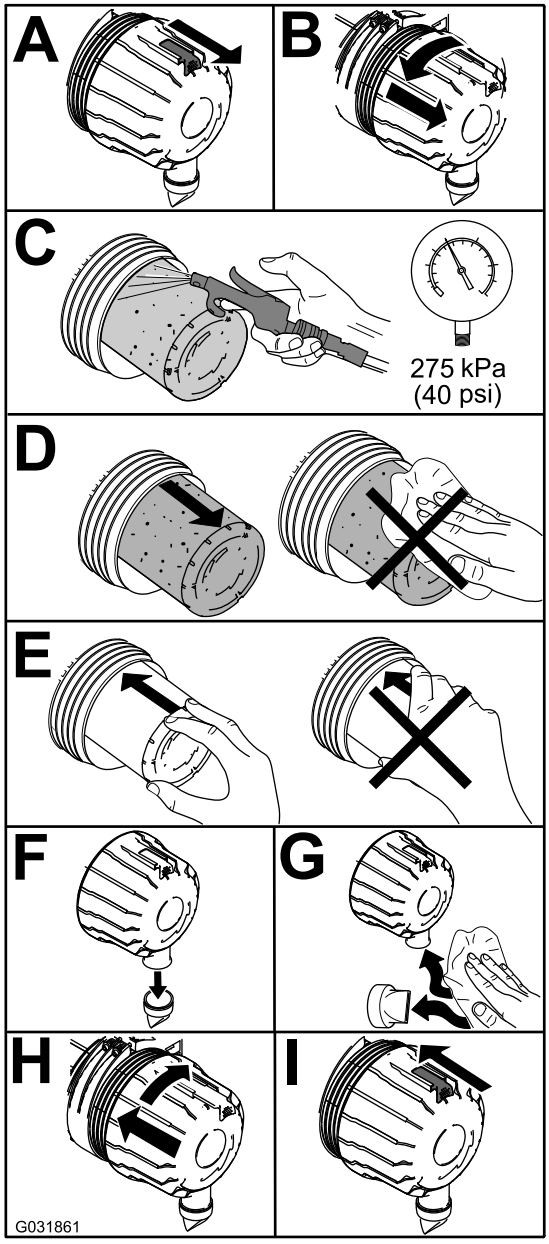

g031861

Figure 65

Note: Do not clean a used element because cleaning it can damage the filter media.

Important: **Never attempt to clean the safety filter (Figure 66). Replace the safety filter after every 3 primary filter services.**

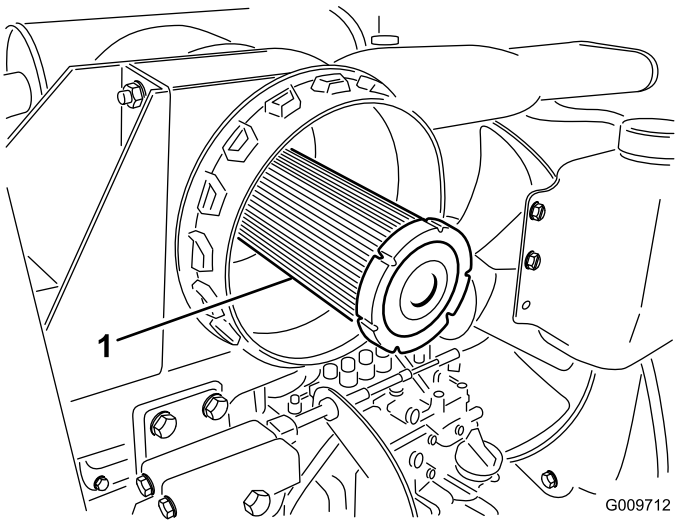

g009712

Figure 66

1. Air-cleaner safety filter

2. Reset the indicator (Figure 64) if it shows red.

Servicing the Engine Oil

Oil Specification

Use high-quality, low-ash engine oil that meets or exceeds the following specifications:

- API service category CJ-4 or higher
- ACEA service category E6
- JASO service category DH-2

Important: **Using engine oil other than API CJ-4 or higher, ACEA E6, or JASO DH-2 may cause the diesel particulate filter to plug or cause engine damage.**

Use the following engine oil viscosity grade:

- Preferred oil: SAE 15W-40 (above 0°F)
- Alternate oil: SAE 10W-30 or 5W-30 (all temperatures)

Toro Premium Engine Oil is available from your Authorized Toro Distributor in either 15W-40 or 10W-30 viscosity grades. See the parts catalog for part numbers.

Checking the Engine-Oil Level

Service Interval: Before each use or daily

The engine is shipped with oil in the crankcase; however, the oil level must be checked before and after the engine is first started.

Important: **Check the engine oil daily. If the engine-oil level is above the Full mark on the dipstick, the engine oil may be diluted with fuel;**

If the engine oil level is above the Full mark, change the engine oil.

The best time to check the engine oil is when the engine is cool before it has been started for the day. If it has already been run, allow the oil to drain back down to the sump for at least 10 minutes before checking. If the oil level is at or below the Add mark on the dipstick, add oil to bring the oil level to the Full mark. **Do not overfill the engine with oil**.

Important: **Keep the engine oil level between the upper and lower limits on the dipstick; the engine may fail if you run it with too much or too little oil.**

1. Park the machine on a level surface.
2. Check the engine-oil level (Figure 67).

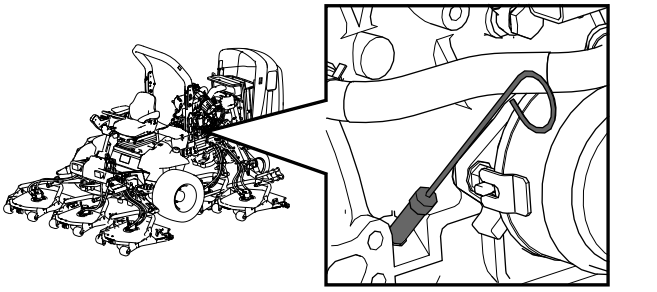

g198647

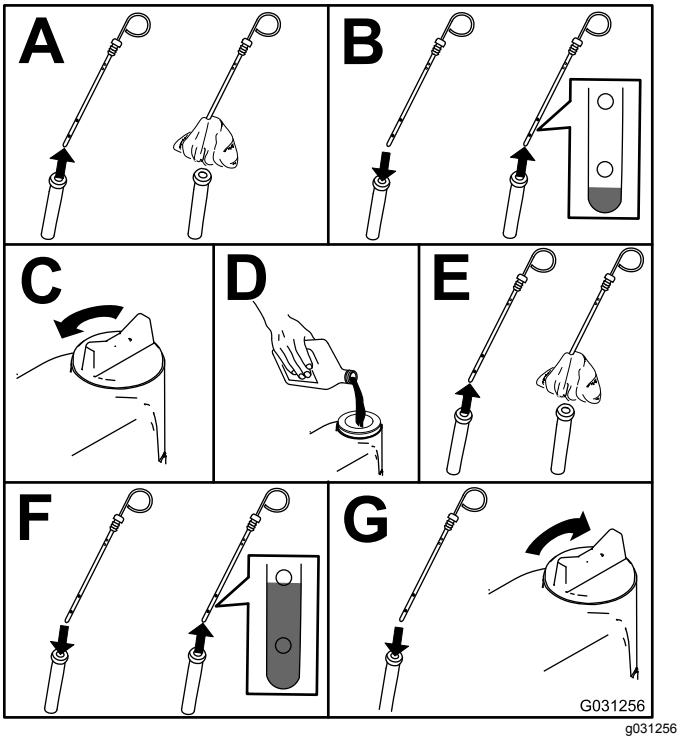

g031256

Figure 67

Note: When using different oil, drain all old oil from the crankcase before adding new oil.

Crankcase Oil Capacity

Approximately 5.7 L (6 US qt) with the filter.

Changing the Engine Oil and Filter

Service Interval: After the first 50 hours

Every 250 hours

1. Start the engine and let it run 5 minutes to allow the oil to warm up.
2. With the machine parked on a level surface, shut off the engine, remove the key, and wait for all moving parts to stop before leaving the operating position.
3. Replace the engine oil and filter (Figure 68).

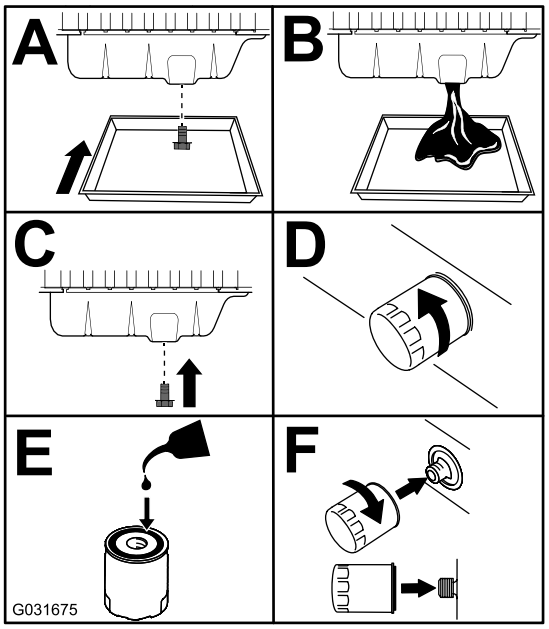

g031675

Figure 68

4. Add oil to the crankcase.

Servicing the Diesel-Oxidation Catalyst (DOC) and the Soot Filter

Service Interval: Every 6,000 hours or clean the soot filter if engine faults SPN 3720 FMI 16, SPN 3720 FMI 0, or SPN 3720 FMI 16 display in the InfoCenter.

- If advisory message ADVISORY 179 displays in the InfoCenter, the DPF is nearing the recommended point for servicing the diesel-oxidation catalyst and the soot filter.

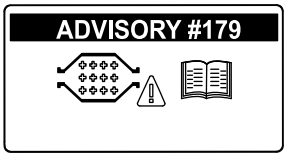

g213865

Figure 69

- If engine faults CHECK ENGINE SPN 3251 FMI 0, CHECK ENGINE SPN 3720 FMI 0, or CHECK ENGINE SPN 3720 FMI 16in the InfoCenter (Figure 70) display in the InfoCenter, clean the soot filter using the steps that follow:

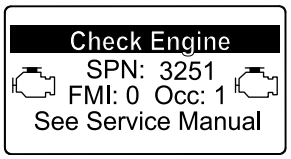

g214715

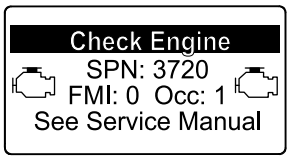

g213864

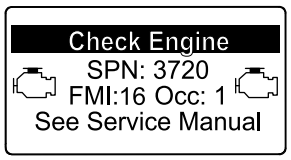

g213863

Figure 70

1. Refer to the Engine section in the *Service Manual* for information on disassembling and assembling the diesel-oxidation catalyst and the soot filter of the DPF.
2. Refer to your Authorized Toro Distributor for diesel-oxidation catalyst and the soot filter replacement parts or service.
3. Contact your Authorized Toro Distributor to have them reset the engine ECU after you install a clean DPF.

Fuel System Maintenance

⚠ DANGER

Under certain conditions, diesel fuel and fuel vapors are highly flammable and explosive. A fire or explosion from fuel can burn you and others and can cause property damage.

- **Use a funnel to fill the fuel tank outdoors, in an open area, when the engine is off and is cold. Wipe up any fuel that spills.**
- **Do not fill the fuel tank completely full. Add fuel to the fuel tank until the level is 6 to 13 mm (1/4 to 1/2 inch) below the bottom of the filler neck. This empty space in the tank allows the fuel to expand.**
- **Never smoke when handling fuel, and stay away from an open flame or where fuel fumes may be ignited by a spark.**
- **Store fuel in a clean, safety-approved container and keep the cap in place.**

Draining the Fuel Tank

Service Interval: Every 800 hours—Drain and clean the fuel tank.

Before storage—Drain and clean the fuel tank.

Drain and clean the tank also if the fuel system becomes contaminated or if you are storing the machine for an extended period of time. Use clean fuel to flush out the tank.

Inspecting the Fuel Lines and Connections

Service Interval: Every 400 hours

Yearly

Inspect the fuel lines and connections for deterioration, damage, or loose connections.

Servicing the Water Separator

Service Interval: Before each use or daily—Drain water or other contaminants from the fuel filter/water separator.

Every 400 hours—Replace the fuel-filter canister.

Service the water separator as shown in Figure 71.

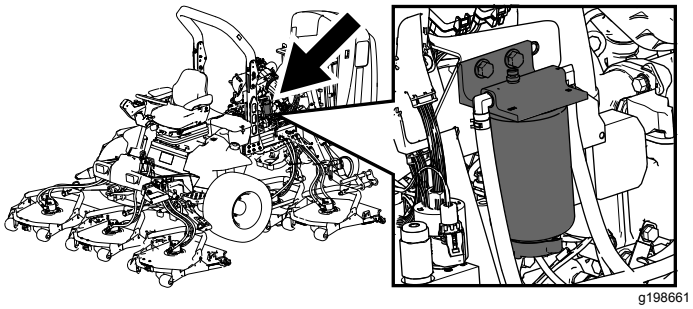

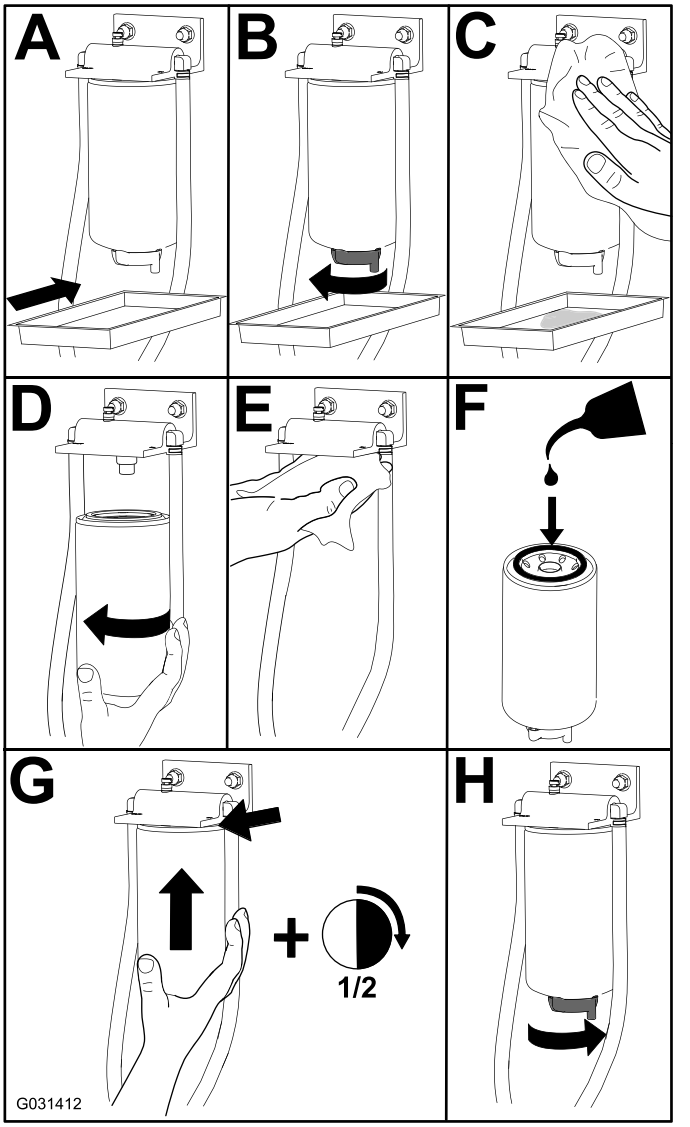

Figure 71

Servicing the Fuel Filter

Service Interval: Every 400 hours

1. Clean the area around the fuel-filter head (Figure 72).

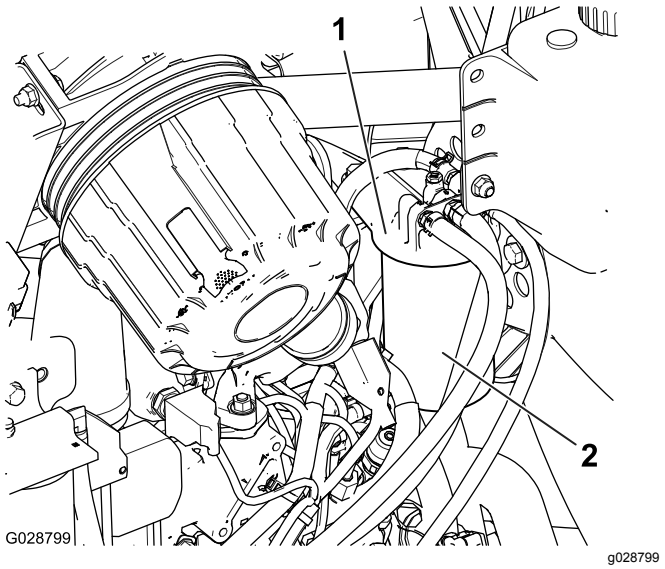

Figure 72

1. Fuel-filter head
2. Fuel filter

2. Remove the filter and clean the filter head mounting surface (Figure 72).
3. Lubricate the filter gasket with clean lubricating engine oil; refer to the engine owner's manual for additional information.
4. Install the dry filter canister, by hand, until the gasket contacts the filter head, then rotate it an additional 1/2 turn.
5. Start the engine and check for fuel leaks around the filter head.

Cleaning the Fuel-Pickup Tube Screen

The fuel-pickup tube, located inside the fuel tank, is equipped with a screen to help prevent debris from entering the fuel system. Remove the fuel-pickup tube and clean the screen as required.

1. Remove the hose clamp that secures the fuel supply hose to the fitting of the fuel-pickup tube (Figure 73).

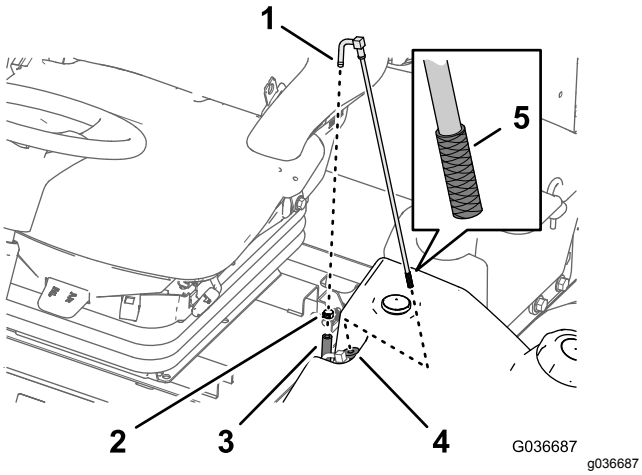

Figure 73

1. Fitting (fuel-pickup tube)
2. Hose clamp
3. Fuel supply hose
4. Rubber bushing
5. Screen

2. Separate the hose from the fitting (Figure 73).
3. Lift the fuel-pickup tube from the fuel tank (Figure 73).

   Note: Lift the tube straight from the busing in the tank.
4. Clean any debris from the screen at the end of the fuel-pickup tube (Figure 73).
5. Insert the fuel-pickup tube through the rubber bushing and into the tank (Figure 73).

   Note: Ensure that the fuel-pickup tube is fully seated into the rubber bushing.
6. Install the supply hose onto the fitting of the fuel-pickup tube, and secure the hose with the hose clamp that you removed in step 1.

Priming the Fuel System

Prime the fuel system before starting the engine for the first time, after running out of fuel, or after fuel system maintenance (e.g. draining the filter/water separator, replacing a fuel hose). To prime the fuel system, make sure that the fuel tank has fuel in it. Then, turn the key to the ON position for 10 to 15 seconds which allows the fuel pump to prime the fuel system.

Important: **Do not use the engine starter motor to crank the engine in order to prime the fuel system.**

Bleeding Air from the Injectors

Note: Use this procedure only if the fuel system has been purged of air through normal priming procedures and the engine does not start.

1. Loosen the tube nut for the cylinder #1 fuel-injector at the injection pump (Figure 74).

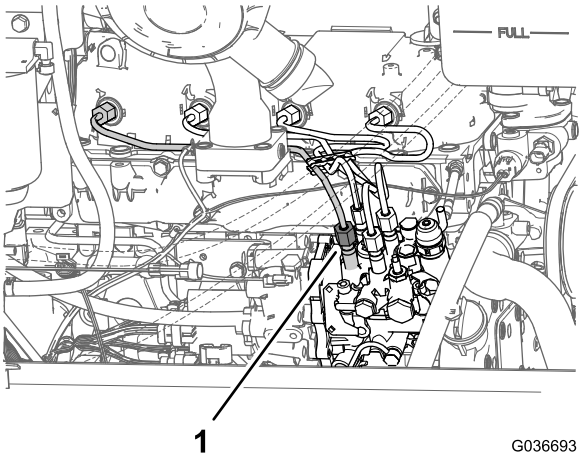

Figure 74

1. Tube nut (cylinder #1 fuel injector)

2. Move the throttle to the FAST position.
3. Turn the key in the switch to the START position and watch the fuel flow around the connector.
4. Turn the key to the OFF position when you observe solid flow.
5. Tighten the pipe connector securely.
6. Clean all residual fuel from the engine.
7. Repeat the procedure for the remaining fuel-injector tubes.

Electrical System Maintenance

Electrical System Safety

- Disconnect the battery before repairing the machine. Disconnect the negative terminal first and the positive last. Connect the positive terminal first and the negative last.
- Charge the battery in an open, well-ventilated area, away from sparks and flames. Unplug the charger before connecting or disconnecting the battery. Wear protective clothing and use insulated tools.

WARNING

CALIFORNIA
Proposition 65 Warning

Battery posts, terminals, and related accessories contain lead and lead compounds, chemicals known to the State of California to cause cancer and reproductive harm. Wash hands after handling.

Checking the Battery Condition

Service Interval: Every 50 hours

Important: **Before welding on the machine, disconnect the negative cable from the battery to prevent damage to the electrical system. Also, you must disconnect the engine, InfoCenter, and machine controllers before welding on the machine.**

Note: Keep the terminals and the entire battery case clean, because a dirty battery discharges slowly. To clean the battery, wash the entire case with a solution of baking soda and water. Rinse with clear water. Coat the battery posts and cable connectors with Grafo 112X (skin-over) grease (Toro Part No. 505-47) or petroleum jelly to prevent corrosion.

Charging and Connecting the Battery

1. Unlatch and raise the operator's console panel (Figure 75).

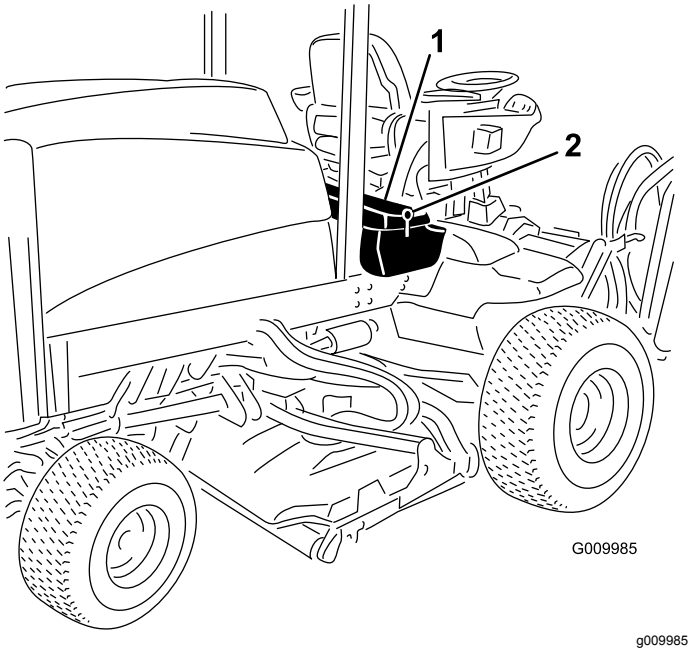

Figure 75

1. Operator's console panel 2. Latch

⚠ DANGER

Battery electrolyte contains sulfuric acid, which is fatal if consumed and causes severe burns.

- **Do not drink electrolyte and avoid contact with skin, eyes, or clothing. Wear safety glasses to shield your eyes and rubber gloves to protect your hands.**
- **Fill the battery where clean water is always available for flushing the skin.**

2. Remove the rubber boot from the positive terminal and inspect the battery.
3. Remove the negative cable (black) from the negative (-) terminal and the positive cable (red) from the positive (+) terminal of the battery (Figure 76).

⚠ WARNING

Incorrect battery cable routing could damage the machine and cables, causing sparks. Sparks can cause the battery gasses to explode, resulting in personal injury.

- **Always disconnect the negative (black) battery cable before disconnecting the positive (red) cable.**
- **Always connect the positive (red) battery cable before connecting the negative (black) cable.**

⚠ WARNING

Battery terminals or metal tools could short against metal components, causing sparks. Sparks can cause the battery gasses to explode, resulting in personal injury.

- **When removing or installing the battery, do not allow the battery terminals to touch any metal parts of the machine.**
- **Do not allow metal tools to short between the battery terminals and metal parts of the machine.**

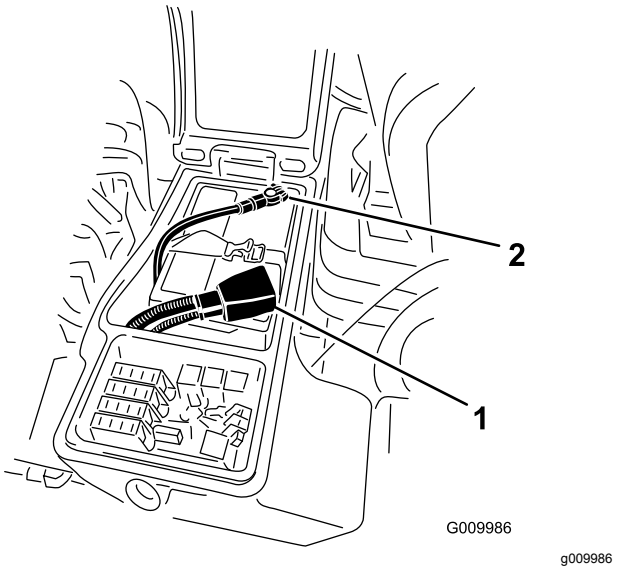

Figure 76

1. Positive battery cable 2. Negative battery cable

4. Connect a 3 to 4 A battery charger to the battery posts. Charge the battery at a rate of 3 to 4 A for 4 to 8 hours.

⚠ WARNING

Charging the battery produces gasses that can explode.

Never smoke near the battery and keep sparks and flames away from battery.

5. When the battery is charged, disconnect the charger from the power outlet and battery posts.
6. Install the positive cable (red) to the positive (+) terminal and the negative cable (black) to the negative (-) terminal of the battery (Figure 76).
7. Secure the cables to the posts with bolts and nuts.

   Note: Make sure that the positive (+) terminal is all the way on the post and the cable is positioned snug to the battery. The cable must not contact the battery cover.
8. Coat both battery connections with Grafo 112X (skin-over) grease, Part No. 505-47, petroleum jelly, or light grease to prevent corrosion.
9. Slide the rubber boot over the positive terminal.
10. Close the console panel and secure the latch.

Locating the Fuses

The fuse block for the machine is located in the right storage box

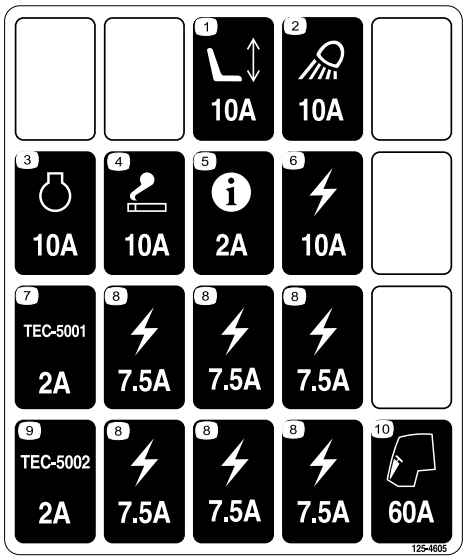

decal125-4605

Figure 77

1. Loosen the latch for the cover of the right storage box and raise the cover (Figure 78) to expose the fuse block (Figure 79).

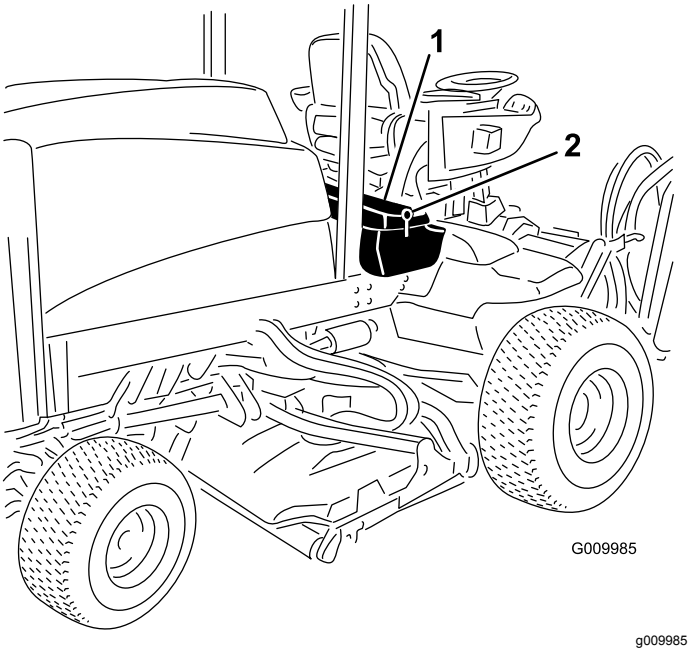

g009985

Figure 78

1. Latch
2. Right storage box

2. Replace the open fuse(s) as needed (Figure 79).

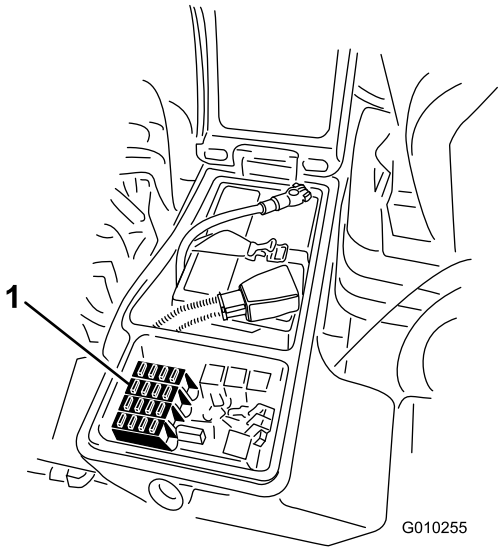

g010255

Figure 79

1. Fuses

3. Close the cover of the right storage box and secure the cover with the latch (Figure 78).

Drive System Maintenance

Checking for End-Play in the Planetary Drives

Service Interval: Every 400 hours

There should be no end-play in the planetary drives/drive wheels (i.e., the wheels should not move when you pull or push them in a direction parallel to the axle).

1. Park the machine on a level surface, engage the parking brake, lower the mower decks, shut off the engine, and remove the key.
2. Chock the rear wheels and raise the front of machine, supporting the front axle/frame on jack stands.

⚠ DANGER

A machine on a jack may be unstable and slip off the jack, injuring anyone beneath it.

- **Do not start the engine while the machine is on a jack.**
- **Always remove the key from the switch before getting off the machine.**
- **Block the tires when you are raising the machine with a jack.**
- **Support the machine with jack stands.**

3. Grasp 1 of the front drive wheels and push/pull it toward and away from the machine, noting any movement.

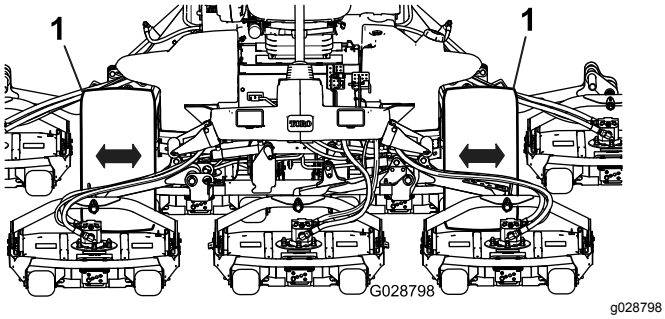

g028798

Figure 80

1. Front drive wheels

4. Repeat step 3 for the other drive wheel.
5. If either wheel moves, contact your Toro Distributor to have the planetary drive rebuilt.

Checking the Planetary-Gear-Drive Oil

Service Interval: Every 400 hours (check if you notice external leakage).

Every 400 hours

Use high quality SAE 85W-140 gear lube as a replacement.

1. With machine on level surface, position the wheel so that 1 check plug is at the 12 o'clock position and the other is at 3 o'clock position (Figure 81).

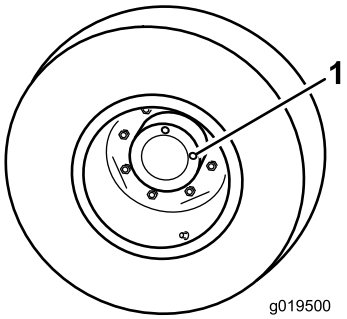

g019500

Figure 81

1. Check/drain plug (2)

2. Remove the plug at the 3 o'clock position (Figure 81).

   The oil level should be at the bottom of the check-plug hole.
3. If the oil level is low, remove the plug at the 12 o'clock position and add oil until it begins to flow out of the hole at the 3 o'clock position.
4. Install both plugs.
5. Repeat steps 1 through 4 on the opposite planetary gear assembly.

Changing the Planetary-Gear-Drive Oil

Service Interval: After the first 200 hours

Every 800 hours or yearly, whichever comes first.

Use a high-quality, SAE 85W-140 gear lube.

1. With the machine on a level surface, position a wheel so that a check plug is at the lowest (6 o'clock) position (Figure 82).

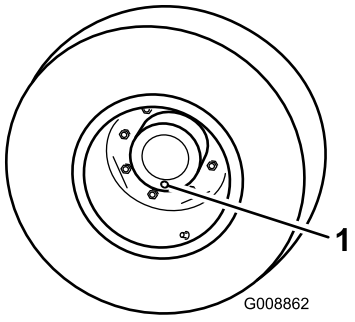

g008862

Figure 82

1. Check/drain plug

2. Place a drain pan under the planetary hub, remove the plug, and allow the oil to drain.
3. Place a drain pan under the brake housing, remove the drain plug, and allow the oil to drain (Figure 83).

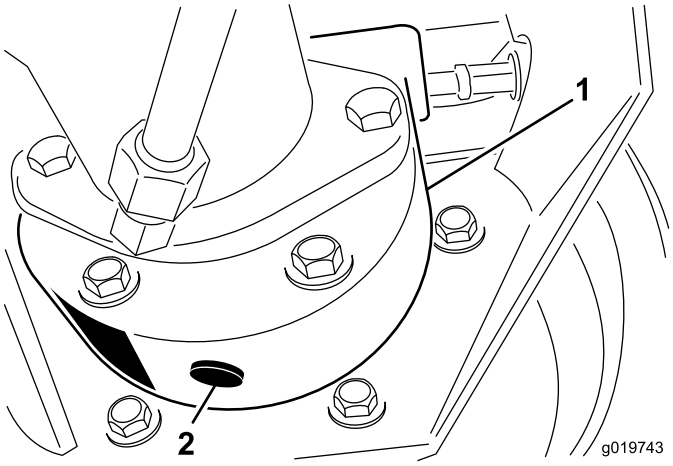

g019743

Figure 83

1. Brake housing
2. Drain plug

4. When all of the oil has drained from both locations, install the plug in the brake housing.
5. Rotate the wheel until the open plug hole in the planetary is at the 12 o'clock position.
6. Through the open hole, slowly fill the planetary with 0.65 L (22 fl oz) of high quality SAE 85W-140 wt gear lube.

   Important: **If the planetary fills before the 0.65 L (22 fl oz) of oil is added, wait 1 hour or install the plug and move the machine approximately ten feet to distribute the oil through the brake system. Then, remove the plug and add the remaining oil.**
7. Install the plug.
8. Repeat the procedure on the opposite planetary/brake assembly.

Checking the Rear Axle and Gearbox for Leaks

Service Interval: Before each use or daily

Visually inspect the rear axle and rear-axle gearbox for leaks.

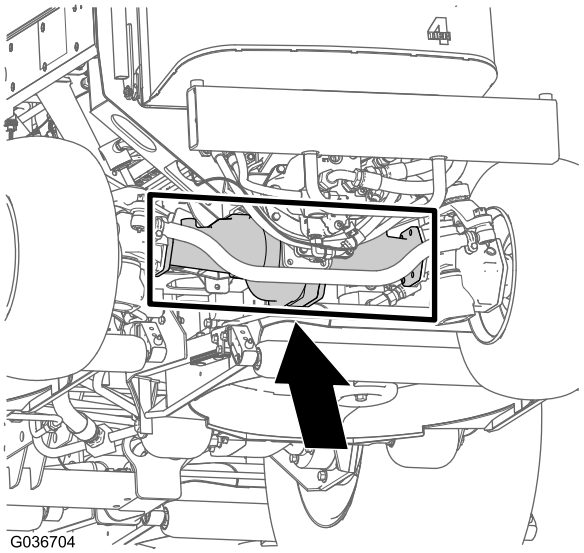

g036704

Figure 84

Checking the Rear-Axle Lubricant

Service Interval: Every 400 hours

The rear axle is filled with SAE 85W-140 gear lube. The capacity is 2.4 L (80 fl oz). Visually inspect for leaks daily.

1. Position the machine on a level surface.
2. Remove a check plug from 1 end of the axle and ensure that the lubricant is up to the bottom of the hole (Figure 85).

Note: If the level is low, remove the fill plug and add enough lubricant to bring the level up to the bottom of the check-plug holes.

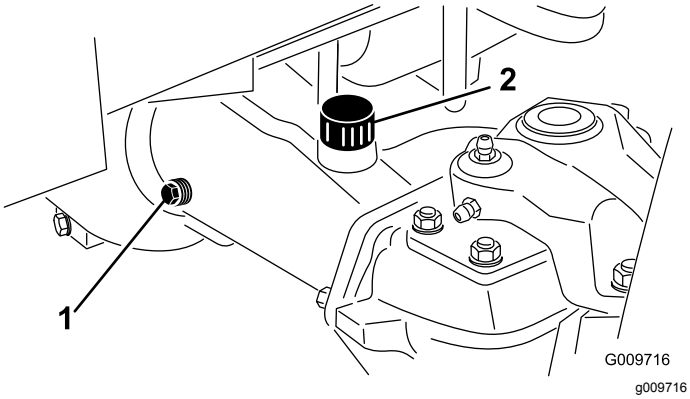

Figure 85

1. Check plug
2. Fill plug

Changing the Rear-Axle Lubricant

Service Interval: After the first 200 hours
Every 800 hours

Lubricant specification: high-quality SAE 85W-140 gear lubricant

Axle capacity: 2.4 L (80 fl oz)

1. Position the machine on a level surface.
2. Clean the area around the 3 drain plugs—1 on each end and 1 in the center (Figure 86).

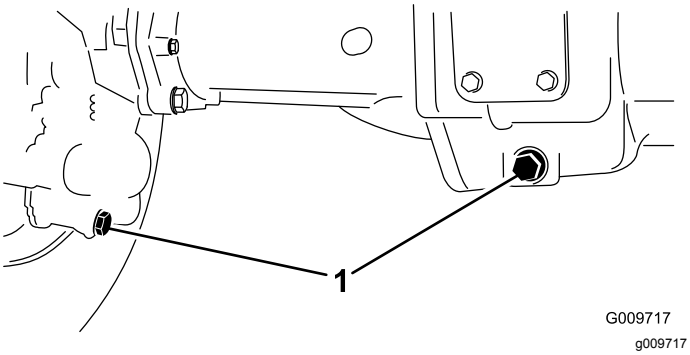

Figure 86

1. Drain-plug location

3. Remove the oil-level check plugs and the main-axle-vent cap to ease draining the gear lubricant.
4. Remove the drain plugs and allow the gear lubricant to drain into the pans.
5. Install the plugs.
6. Remove a check plug and fill the axle with approximately 2.4 L (80 fl oz) of 85W-140 gear lube or until the lubricant is up to the bottom of the hole.
7. Install the check plug.

Checking the Rear-Axle-Gearbox Lubricant

Service Interval: Every 400 hours

The gear box is filled with SAE 85W-140 gear lube. The capacity is 0.5 L (16 fl oz). Visually inspect for leaks daily.

1. Position the machine on a level surface.
2. Remove the check/fill plug from the left side of the gear box and ensure that lubricant is up to the bottom of the hole (Figure 87).

   Note: If the level is low, add enough lubricant to bring the level up to the bottom of the hole.

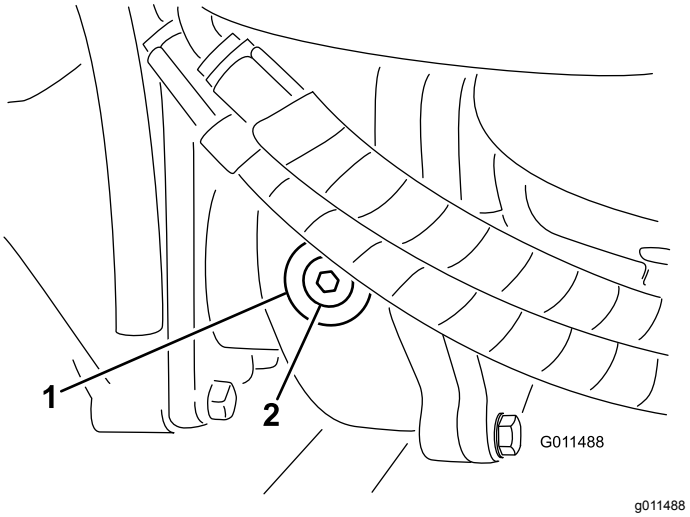

Figure 87

1. Gearbox
2. Check/fill plug

Checking the Rear Wheel Toe-In

Service Interval: Every 800 hours/Yearly (whichever comes first)

1. Measure the center-to-center distance (at axle height) at the front and rear of the steering tires (Figure 88).

   Note: The front measurement must be 3 mm (1/8 inch) less than the rear measurement.

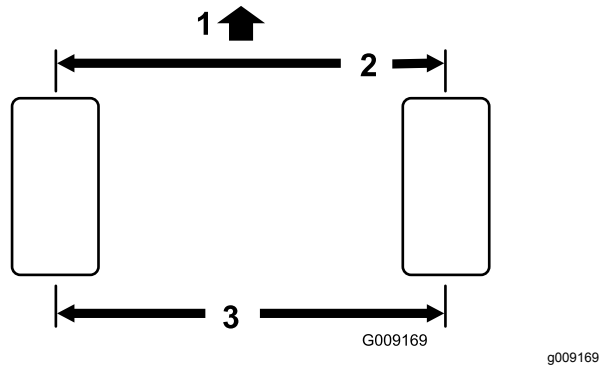

Figure 88

1. Front of the machine
2. 3 mm (1/8 inch) less than the rear measurement
3. Center to center distance

2. To adjust, remove the cotter pin and nut from either tie rod ball joint (Figure 89). Remove the tie-rod ball joint from the axle-case support.

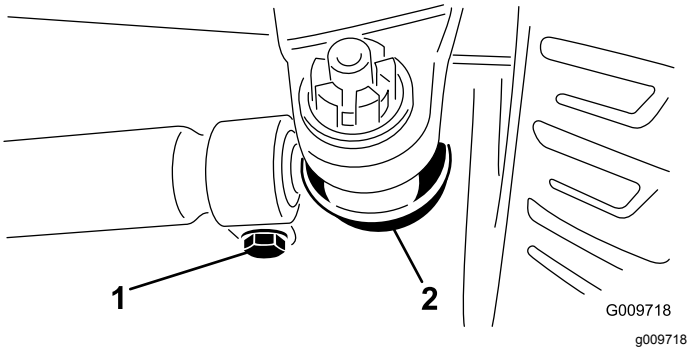

Figure 89

1. Tie-rod clamp
2. Tie-rod ball joint

3. Loosen the clamps at both ends of the tie rods (Figure 89).
4. Rotate the detached ball joint inward or outward 1 complete revolution and tighten the clamp at the loose end of the tie rod.
5. Rotate the entire tie-rod assembly the same direction (inward or outward) 1 complete revolution and tighten the clamp at the connected end of the tie rod.
6. Install the ball joint in the axle-case support, tighten the nut finger-tight, and measure the toe-in.
7. Repeat procedure if necessary.
8. Tighten the nut and install a new cotter pin when the adjustment is correct.

Cooling System Maintenance

Cooling System Safety

- **Swallowing engine coolant can cause poisoning; keep out of reach from children and pets.**
- Discharge of hot, pressurized coolant or touching a hot radiator and surrounding parts can cause severe burns.
  - Always allow the engine to cool at least 15 minutes before removing the radiator cap.
  - Use a rag when opening the radiator cap, and open the cap slowly to allow steam to escape.

Checking the Cooling System

Service Interval: Before each use or daily

Coolant specification: 50/50 mixture of water and ethylene glycol antifreeze

Cooling system capacity: 8.5 L (9 US qt).

1. Carefully remove the radiator cap.

⚠ CAUTION

If the engine has been running, the pressurized, hot coolant can escape and cause burns.

- **Do not open the radiator cap when the engine is running.**
- **Use a rag when opening the radiator cap, and open the cap slowly to allow steam to escape.**

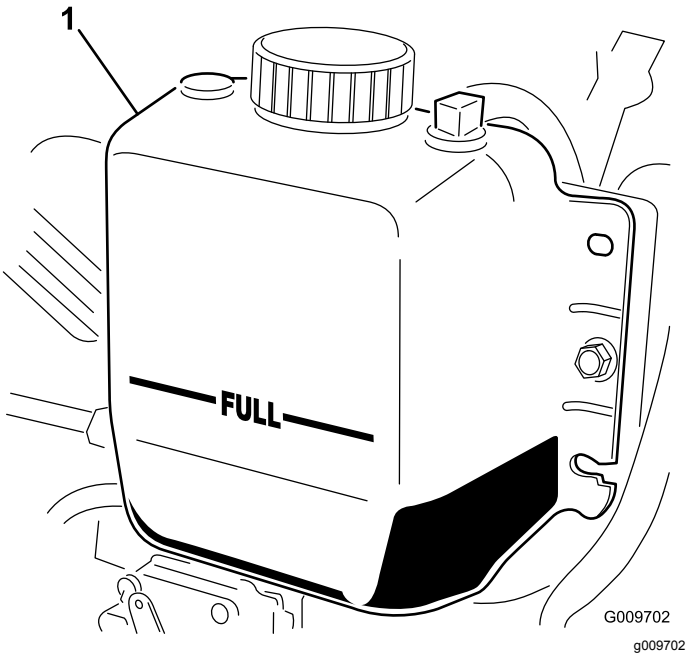

Figure 90

1. Expansion tank

2. Check the coolant level in the radiator. The radiator should be filled to the top of the filler neck and the expansion tank filled to the FULL mark (Figure 90).
3. If the coolant is low, add a 50/50 mixture of water and ethylene glycol anti freeze. Do not use water only or alcohol/methanol base coolants.
4. Install the radiator cap and expansion-tank cap.

Cleaning the Cooling System

Service Interval: Before each use or daily—Remove debris from the engine area, oil cooler, and radiator.

Clean them more frequently in dirty conditions.

This machine is equipped with a hydraulically driven fan drive system that automatically (or manually) reverses to reduce oil cooler/radiator and screen debris buildup. While this feature can help reduce the time required to clean oil cooler/radiator, it does not eliminate the need for routine cleaning. Periodic cleaning and inspection of the radiator/cooler is still required.

1. Unlatch and swing open the rear screen (Figure 91).

   Note: To remove the screen, lift it off the hinge pins.
2. Clean the screen thoroughly of all debris.

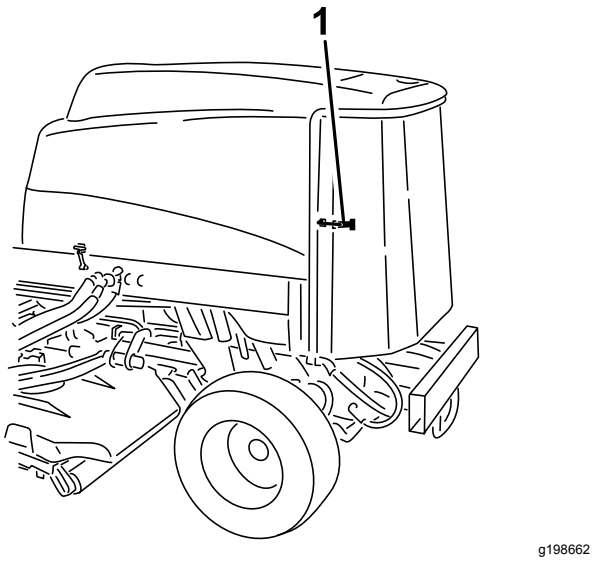

Figure 91

1. Rear-screen latch

3. Thoroughly clean both sides of the oil cooler and the radiator with compressed air (Figure 92).

   Note: Start from the front and blow the debris out toward the back. Then clean from the back side and blow toward the front. Repeat procedure several times until you remove all chaff and debris.

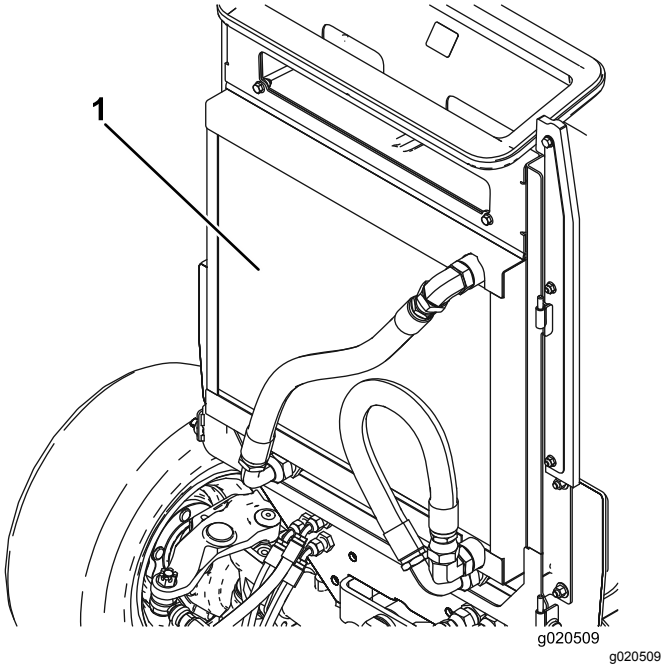

Figure 92

1. Oil cooler/radiator

Important: **Cleaning the oil cooler/radiator with water promotes premature corrosion damage to components and compacts debris.**

Brake Maintenance

Adjusting the Service Brakes

Adjust the service brakes when there is more than 25 mm (1 inch) of free travel of the brake pedal, or when the brakes do not work effectively. Free travel is the distance the brake pedal moves before you feel braking resistance.

1. Release the locking latch from the brake pedals so that both pedals work independently of each other.
2. To reduce free travel of the brake pedals, tighten the brakes as follows:
   A. Loosen the front nut on the threaded end of the brake cable (Figure 93).

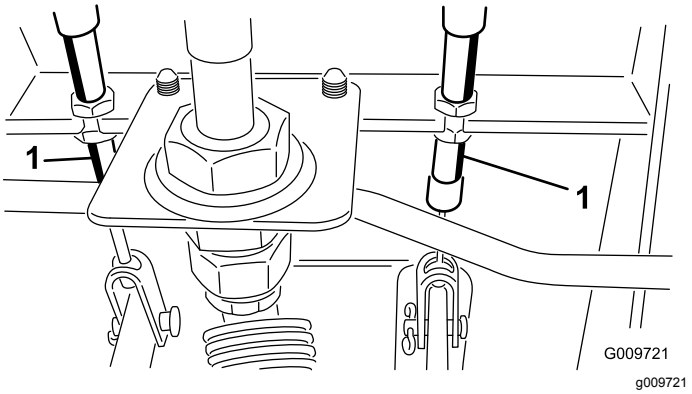

Figure 93

1. Brake cable

   B. Tighten the rear nut to move the cable rearward until the brake pedals have 13 to 25 mm (1/2 to 1 inch) of free travel.
   C. Tighten the front nuts after the brakes are adjusted correctly.

Belt Maintenance

Servicing the Alternator Belt

Service Interval: Every 100 hours

Proper tension of the belt allows 10 mm (3/8 inch) of deflection when a force of 4.5 kg (10 lb) is applied on the belt midway between the pulleys.

If the deflection is not 10 mm (3/8 inch), loosen the alternator-mounting bolts (Figure 94).

Note: Increase or decrease the alternator-belt tension and tighten the bolts. Check the deflection of the belt again to ensure that the tension is correct.

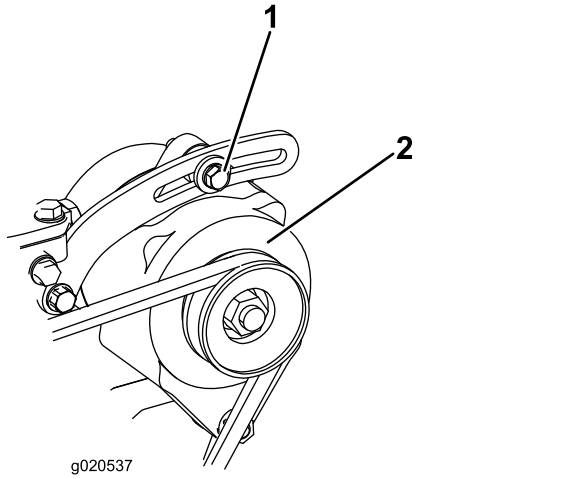

g020537

Figure 94

1. Mounting bolt
2. Alternator

Hydraulic System Maintenance

Hydraulic System Safety

- **Ensure that all hydraulic-fluid hoses and lines are in good condition and all hydraulic connections and fittings are tight before applying pressure to the hydraulic system.**
- **Keep your body and hands away from pinhole leaks or nozzles that eject high-pressure hydraulic fluid.**
- **Use cardboard or paper to find hydraulic leaks.**
- **Safely relieve all pressure in the hydraulic system before performing any work on the hydraulic system.**
- **Seek immediate medical attention if fluid is injected into skin. Injected fluid must be surgically removed within a few hours by a doctor.**

Checking the Hydraulic-Fluid Level

Service Interval: Before each use or daily

The reservoir is filled at the factory with approximately 28.4 L (7.50 US gallons) of high-quality hydraulic fluid. Check the level of the hydraulic fluid before the engine is first started and daily thereafter. The recommended replacement fluid is as follows:

Toro Premium All Season Hydraulic Fluid
(Available in 19 L (5 US gallons) pails or 208 L (55 US gallons) drums. See the *Parts Catalog* or your Toro Distributor for part numbers).

Alternative fluids: If the Toro fluid is not available, other **conventional, petroleum-based** fluids may be used, provided they meet all of the following material properties and industry specifications. Check with your oil supplier to see whether the oil meets these specifications.

Note: Toro does not assume responsibility for damage caused by improper substitutions, so use only products from reputable manufacturers who will stand behind their recommendation.

High Viscosity Index/Low Pour Point Anti-wear Hydraulic Fluid, ISO VG 46

Material Properties:

Viscosity, ASTM D445	cSt @ 40°C (104°F) 44 to 50 cSt @ 100°C (212°F) 7.9 to 9.1
Viscosity Index ASTM D2270	140 to 160
Pour Point, ASTM D97	-37°C to -45°C (-34°F to -49°F)
Industry Specifications:	Vickers I-286-S (Quality Level), Vickers M-2950-S (Quality Level), Denison HF-0

Important: **The ISO VG 46 Multigrade fluid has been found to offer optimal performance in a wide range of temperature conditions. For operation in consistently high ambient temperatures, 65°F (18°C) to 120°F (49°C), ISO VG 68 hydraulic fluid may offer improved performance.**

Premium Biodegradable Hydraulic Fluid-Mobil EAL EnviroSyn 46H

Important: **Mobil EAL EnviroSyn 46H is the only synthetic biodegradable fluid approved by Toro. This fluid is compatible with the elastomers used in Toro hydraulic systems and is suitable for a wide-range of temperature conditions. This fluid is compatible with conventional mineral oils, but for maximum biodegradability and performance the hydraulic system should be thoroughly flushed of conventional fluid. The fluid is available in 19 L (5 US gallon) containers or 208 L (55 US gallon) drums from your Mobil Distributor.**

Important: **Many hydraulic fluids are almost colorless, making it difficult to spot leaks. A red dye additive for the hydraulic system fluid is available in 20 ml (2/3 oz) bottles. 1 bottle is sufficient for 15 to 22 L (4 to 6 US gallons) of hydraulic fluid. Order part no. 44-2500 from your Toro Distributor.**

1. Park the machine on a level surface, engage the parking brake, lower the mower decks, shut off the engine, and remove the key.
2. Check the hydraulic-fluid level (Figure 95).

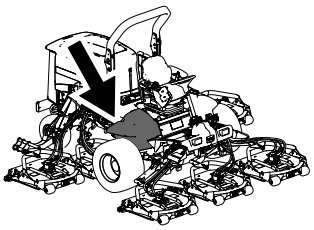

g198718

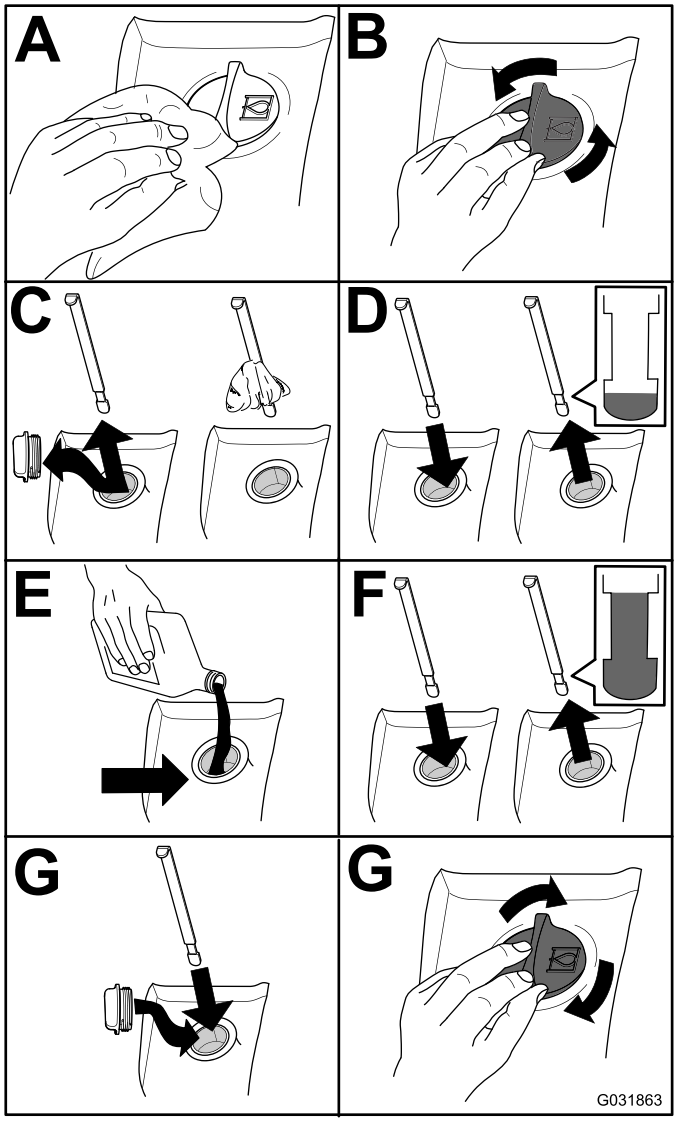

g031863

Figure 95

Changing the Hydraulic Fluid

Service Interval: Every 800 hours

If the fluid becomes contaminated, contact your Toro Distributor because the system must be flushed. Contaminated fluid looks milky or black when compared to clean oil.

1. Park the machine on a level surface, engage the parking brake, lower the mower decks, shut off the engine, and remove the key.
2. Raise the hood.
3. Disconnect the case return line from the bottom of the reservoir and let the hydraulic fluid flow into a large drain pan.
4. Install the hose when the hydraulic fluid stops draining.
5. Fill the reservoir with hydraulic fluid; refer to Checking the Hydraulic-Fluid Level (page 69).

   Important: **Use only the hydraulic fluids specified. Other fluids could cause system damage.**
6. Install the reservoir cap.
7. Turn the key in the key switch to the ON position to start the engine. Use all the hydraulic controls to distribute hydraulic fluid throughout the system, and check for leaks.
8. Turn the key in the key switch to the OFF position.
9. Check the fluid level and add enough to raise level the level to the FULL mark on the dipstick. **Do not overfill.**

Replacing the Hydraulic Filters

Service Interval: After the first 200 hours

Every 800 hours

Use Toro replacement filters Part No. 94-2621 for the rear (mower decks) of the machine and Part No. 75-1310 for the front (charge) of the machine.

Important: **Use of any other filter may void the warranty on some components.**

1. Tilt the operators seat to access the mower pressure filter; refer to Accessing the Hydraulic Lift Compartment (page 52)

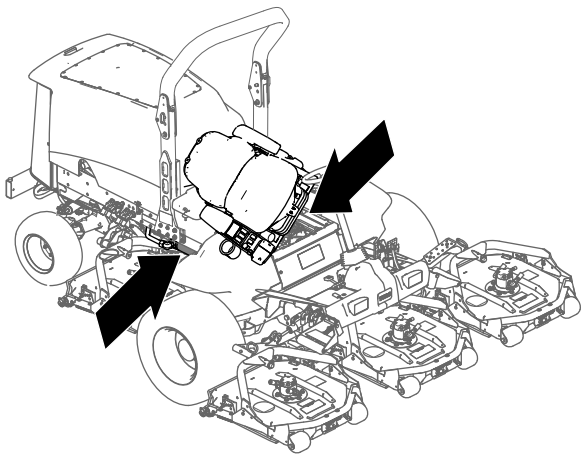

g201858

Figure 96

2. Replace the charge hydraulic filter at the hydraulic lift compartment as shown in Figure 97.

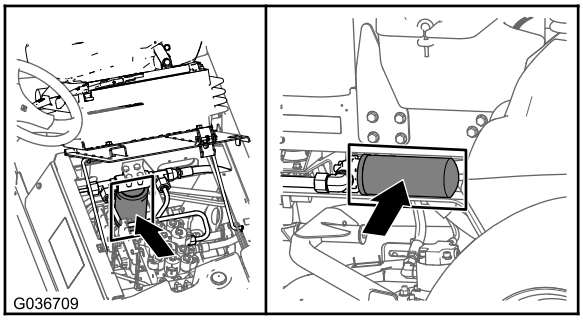

g036709

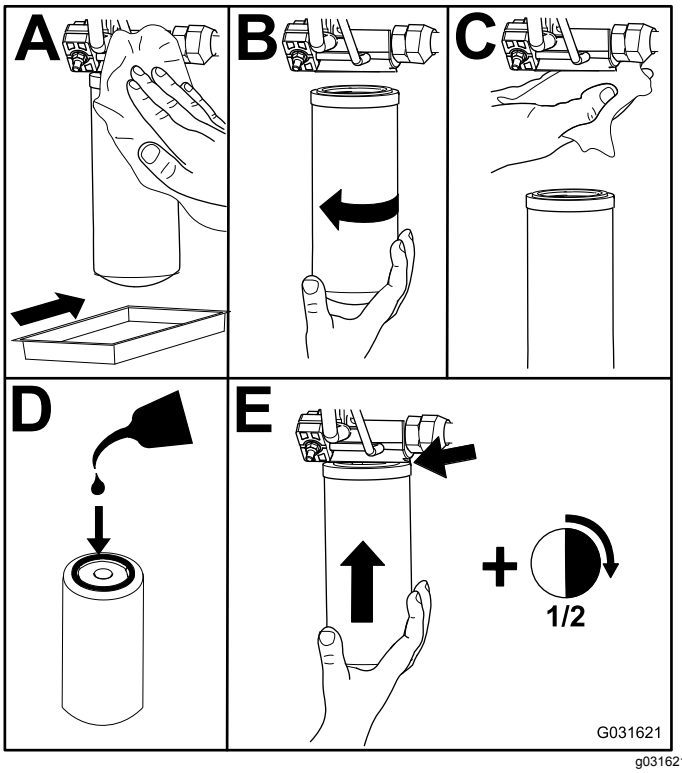

g031621

Figure 97

3. Lower and secure the operator's seat.
4. Replace the return filter at the right side of the machine (Figure 97).
5. Start the engine and let it run for about 2 minutes to purge air from the system. Shut off the engine and check for leaks.

Checking the Hydraulic Lines and Hoses

Service Interval: Before each use or daily

Inspect the hydraulic lines and hoses daily for leaks, kinked lines, loose mounting supports, wear, loose fittings, weather deterioration, and chemical deterioration. Make all necessary repairs before operating the machine.

Mower Deck Maintenance

Removing the Mower Decks

1. Park the machine on a level surface, engage the parking brake, lower the mower decks, shut off the engine, and remove the key.
2. Disconnect and remove the hydraulic motor from the deck (Figure 98). Cover the top of the spindle to prevent contamination.

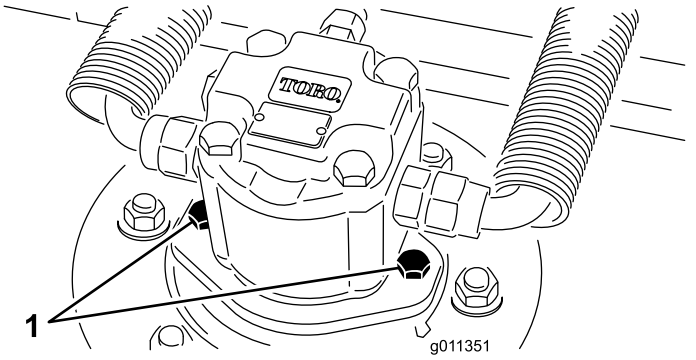

g011351

Figure 98

1. Motor-mounting screws

3. Remove the lynch pin (for Groundsmaster 4500 machines) or retaining nut (for Groundsmaster 4700 machines) securing the deck-carrier frame to the lift-arm pivot pin (Figure 99).

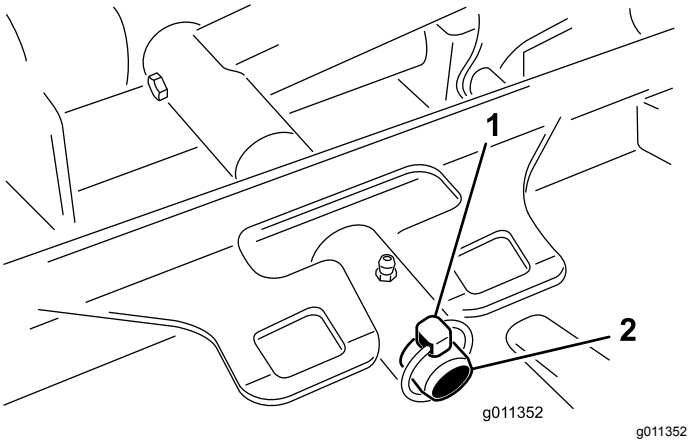

g011352

Figure 99

1. Lynch pin
2. Lift-arm pivot pin

4. Roll the cutting deck away from the machine.

Installing the Mower Decks

1. Move the mower deck into position in front of the machine.
2. Slide the deck carrier frame onto the lift-arm-pivot pin (Figure 99). Secure the deck to the pin with the lynch pin (for Groundsmaster 4500 machines) or retaining nut (for Groundsmaster 4700 machines).
3. Install the hydraulic motor to the deck (Figure 98). Make sure that the O-ring is in position and not damaged.
4. Grease the spindle.

Servicing the Front Roller

Inspect the front roller for wear, excess wobble, or binding. Service or replace the roller or components if any of these conditions exist.

Disassembling the Front Roller

1. Remove the roller-mounting bolt (Figure 100).
2. Insert a punch through the end of the roller housing and drive the opposite bearing out by alternating taps to the opposite side of inner bearing race. There should be a 1.5 mm (0.060 inch) lip of inner race exposed.

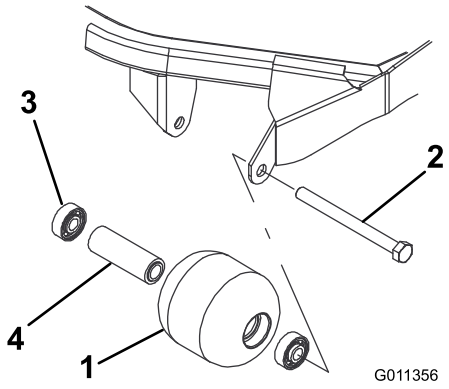

g011356

Figure 100

1. Front roller
2. Mounting bolt
3. Bearing
4. Bearing spacer

3. Push the second bearing out in press.
4. Inspect the roller housing, bearings, and bearing spacer for damage (Figure 100). Replace damaged components and assemble.

Assembling the Front Roller

1. Press the first bearing into the roller housing (Figure 100). Press on the outer race only or equally on the inner and outer race.
2. Insert the spacer (Figure 100).

3. Press the second bearing into the roller housing (Figure 100). Pressing equally on the inner and outer race until the inner race comes in contact with the spacer.
4. Install the roller assembly into the deck frame.
5. Verify that there is no more than a 1.5 mm (0.060 inch) gap between roller assembly and the roller mount brackets of the deck frame. If there is a gap over 1.5 mm (0.060 inch), install enough 5/8-inch diameter washers to take up the slop.

   Important: **Securing the roller assembly with a gap larger than 1.5 mm (0.060 inch) creates a side load on the bearing and can lead to premature bearing failure**
6. Torque the mounting bolt to 108 N·m (80 ft-lb).

Blade Maintenance

Blade Safety

A worn or damaged blade can break, and a piece of the blade could be thrown toward you or bystanders, resulting in serious personal injury or death.

- Inspect the blade periodically for wear or damage.
- Use care when checking the blades. Wrap the blades or wear gloves, and use caution when servicing the blades. Only replace or sharpen the blades; never straighten or weld them.
- On multi-bladed machines, take care as rotating 1 blade can cause other blades to rotate.

Servicing the Blade Plane

The mower deck comes from the factory preset at 5 cm (2 inches) height of cut and blade rake of 7.9 mm (0.310 inch). The left and right heights are also preset to within ± 0.7 mm (0.030 inch) of the other.

The mower deck is designed to withstand blade impacts without deformation of the chamber. If a solid object is struck, inspect the blade for damage and the blade plane for accuracy.

Inspecting the Blade Plane

1. Remove the hydraulic motor from the mower deck and remove the mower deck from the machine.
2. Use a hoist (or minimum of 2 people) and place the mower deck on a flat table
3. Mark 1 end of the blade with a paint pen or marker. Use this end of the blade to check all heights.
4. Position the cutting edge of the marked end of the blade at 12 o'clock (straight ahead in the direction of mowing) (Figure 101) and measure height from table to cutting edge of blade.

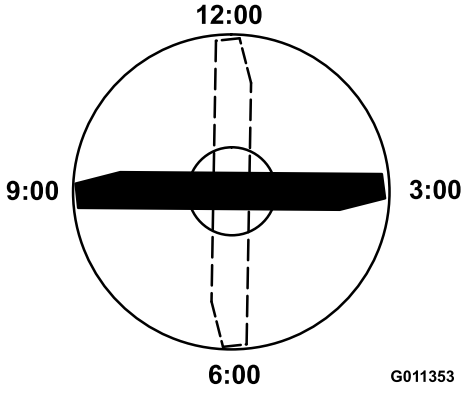

Figure 101

5. Rotate the marked end of the blade to the 3 and 9 o'clock positions (Figure 101) and measure the heights.
6. Compare the 12 o'clock measured height to the height-of-cut setting. It should be within 0.7 mm (0.030 inch). The 3 and 9 o'clock heights should be 1.6 to 6.0 mm (0.060 to 0.240 inch) higher than the 12 o'clock setting and within 2.2 mm (0.090 inch) of each other.

If any of these measurements are not within specification, proceed to Adjusting the Blade Plane (page 75).

Adjusting the Blade Plane

Start with the front adjustment (change 1 bracket at a time).

1. Remove the height-of-cut bracket, (front, left, or right) from the deck frame (Figure 102).
2. Adjust 1.5 mm (0.060 inch) shims and/or 0.7 mm (0.030 inch) shims between the deck frame and bracket to achieve the desired height setting (Figure 102).

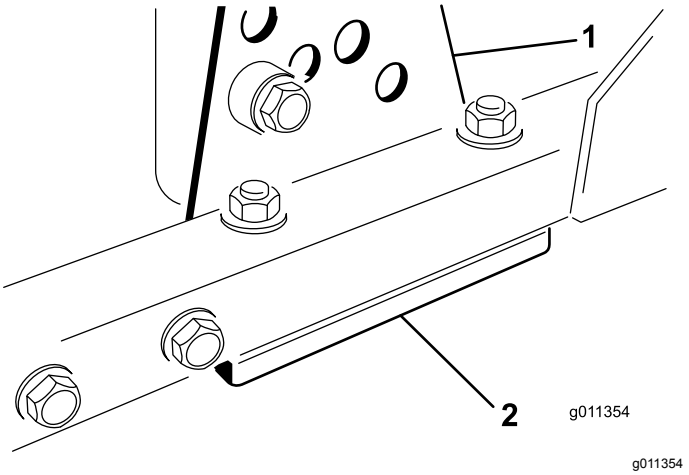

Figure 102

1. Height-of-cut bracket
2. Shims

3. Install the height-of-cut bracket to the deck frame with the remaining shims assembled below the height-of-cut bracket.
4. Secure the socket-head bolt/spacer and flange nut.

   Note: Socket-head bolt/spacer are held together with thread-locking adhesive to prevent the spacer from falling inside the deck frame.
5. Verify the 12 o'clock height and adjust if needed.
6. Determine if only 1 or both (right and left) height-of-cut brackets need to be adjusted.

   Note: If the 3 or 9 o'clock side is 1.6 to 6.0 mm (0.060 to 0.240 inch) higher than the new front height then no adjustment is needed for that side. Adjust the other side to within ± 2.2 mm (0.090 inch) of the correct side.
7. Adjust the right and/or left height-of-cut brackets by repeating steps 1 through 4.
8. Secure the carriage bolts and flange nuts.
9. Verify the 12, 3, and 9 o'clock heights.

Removing and Installing the Mower Blade(s)

Replace the blade if it hits a solid object, is out of balance, or if it is bent. Always use genuine Toro replacement blades to ensure safety and optimum performance.

1. Park the machine on a level surface, raise the mower deck to the highest position, engage the parking brake, shut off the engine, and remove the key.

   Note: Block the mower deck to prevent it from accidentally falling.
2. Grasp the end of the blade using a rag or thickly-padded glove.
3. Remove the blade bolt, anti-scalp cup, and blade from the spindle shaft (Figure 103).

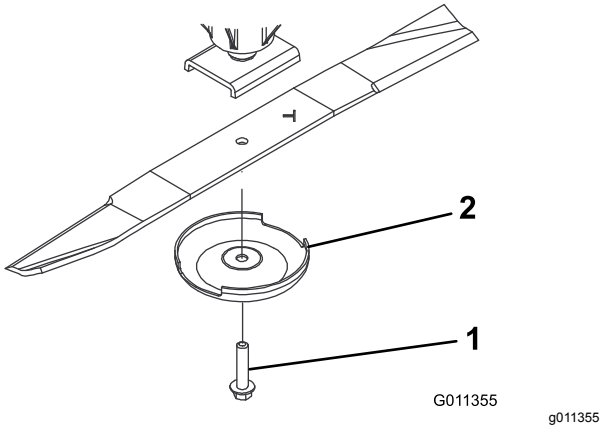

Figure 103

1. Blade bolt
2. Anti-scalp cup

4. Install the blade, anti-scalp cup, and blade bolt and tighten the blade bolt to 115 to 149 N·m (85 to 110 ft-lb).

   Important: **The curved part of the blade must be pointing toward the inside of the mower deck to ensure proper cutting.**

   Note: After striking a foreign object, torque all of the spindle-pulley nuts to 115 to 149 N·m (85 to 110 ft-lb).

Inspecting and Sharpening the Mower Blade(s)

Two areas must be considered when checking and servicing the mower blade—the sail and the cutting edge. Both cutting edges and the sail, which is the turned-up portion opposite of the cutting edge, contribute to a good quality of cut. The sail is important because it lifts the grass up straight, thereby producing an even cut. However, the sail gradually wears down during operation. As the sail wears down, the quality of cut degrades, although the cutting edges are sharp. The cutting edge of the blade must be sharp so that the grass is cut rather than torn. A dull cutting edge is evident when the tips of the grass appear brown and shredded. Sharpen the cutting edges to correct this condition.

1. Park the machine on a level surface, raise the mower decks, engage the parking brake, put the traction pedal in NEUTRAL, put the PTO lever in the OFF position, shut off the engine, and remove the key.
2. Examine the cutting ends of the blade carefully, especially where the flat and curved parts of the blade meet (Figure 104).

   Note: Because sand and abrasive material can wear away the metal that connects the flat and curved parts of the blade, check the blade before using the mower. If wear is noticed (Figure 104), replace the blade.

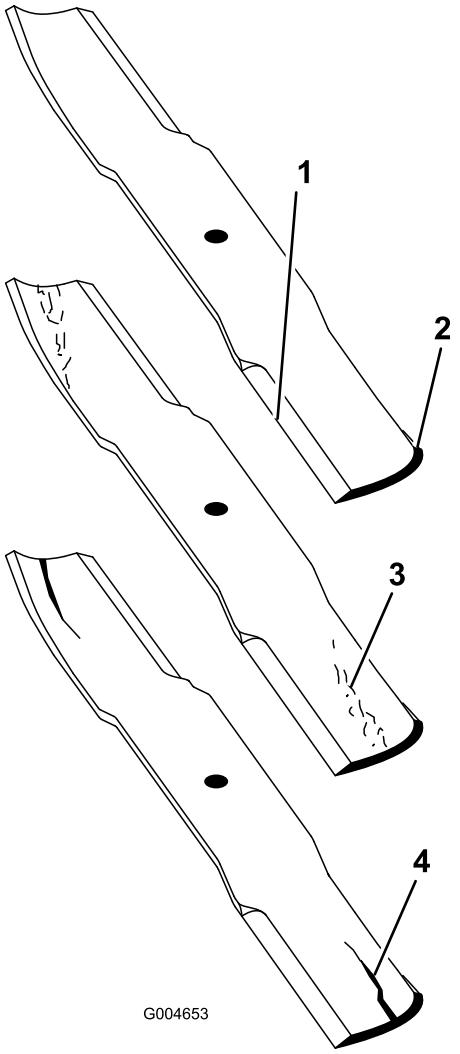

g004653

Figure 104

1. Cutting edge
2. Curved area
3. Wear/slot forming
4. Crack

3. Examine the cutting edges of all of the blades and sharpen the cutting edges if they are dull or nicked (Figure 105).

   Note: Sharpen only the top of the cutting edge and maintain the original cutting angle to ensure sharpness (Figure 105). The blade remains balanced if the same amount of metal is removed from both cutting edges.

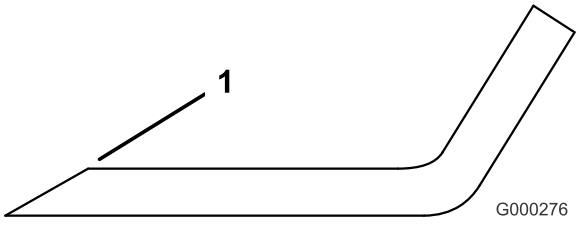

g000276

Figure 105

1. Sharpen at the original angle.

Note: Remove the blades and sharpen them on a grinder. After sharpening the cutting edges, install the blade with the anti-scalp cup and blade bolt; refer to Removing and Installing the Mower Blade(s) (page 75).

Storage

Preparing for Seasonal Storage

Traction Unit

1. Thoroughly clean the traction unit, mower decks, and the engine.
2. Check the tire pressure; refer to Checking the Tire Pressure (page 14).
3. Check all fasteners for looseness; tighten as necessary.
4. Grease or oil all grease fittings and pivot points. Wipe up any excess lubricant.
5. Lightly sand and use touch-up paint on painted areas that are scratched, chipped, or rusted. Repair any dents in the metal body.
6. Service the battery and cables as follows:
   A. Remove the battery terminals from the battery posts.
   B. Clean the battery, terminals, and posts with a wire brush and baking soda solution.
   C. Coat the cable terminals and battery posts with Grafo 112X skin-over grease (Toro Part No. 505-47) or petroleum jelly to prevent corrosion.
   D. Slowly recharge the battery every 60 days for 24 hours to prevent lead sulfation of the battery.
7. Engage the transport latches (Groundsmaster 4700-D machines only).

Engine

1. Drain the engine oil from the oil pan and install the drain plug.
2. Remove and discard the oil filter. Install a new oil filter.
3. Fill the oil pan with motor oil.
4. Start the engine and run it at idle speed for approximately 2 minutes.
5. Shut off the engine.
6. Flush the fuel tank with fresh, clean diesel fuel.
7. Secure all of the fuel system fittings.
8. Thoroughly clean and service the air-cleaner assembly.
9. Seal the air-cleaner inlet and the exhaust outlet with weatherproof tape.

10. Check the anti freeze protection and add a 50/50 solution of water and ethylene glycol anti-freeze as needed for the expected minimum temperature in your area.

Mower Deck

If the mower decks are separated from the traction unit for any length of time, install a spindle plug in the top of the spindles to protect the spindles from dust and water.

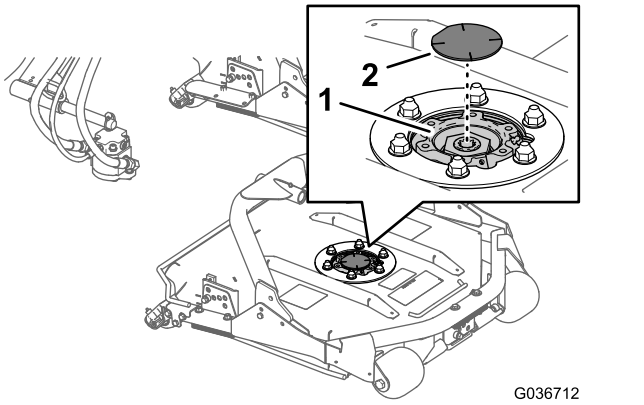

Figure 106

1. Spindle plug
2. Spindle sprocket

European Privacy Notice

The Information Toro Collects
Toro Warranty Company (Toro) respects your privacy. In order to process your warranty claim and contact you in the event of a product recall, we ask you to share certain personal information with us, either directly or through your local Toro company or dealer.

The Toro warranty system is hosted on servers located within the United States where privacy law may not provide the same protection as applies in your country.

BY SHARING YOUR PERSONAL INFORMATION WITH US, YOU ARE CONSENTING TO THE PROCESSING OF YOUR PERSONAL INFORMATION AS DESCRIBED IN THIS PRIVACY NOTICE.

The Way Toro Uses Information
Toro may use your personal information to process warranty claims, to contact you in the event of a product recall and for any other purpose which we tell you about. Toro may share your information with Toro's affiliates, dealers or other business partners in connection with any of these activities. We will not sell your personal information to any other company. We reserve the right to disclose personal information in order to comply with applicable laws and with requests by the appropriate authorities, to operate our systems properly or for our own protection or that of other users.

Retention of your Personal Information
We will keep your personal information as long as we need it for the purposes for which it was originally collected or for other legitimate purposes (such as regulatory compliance), or as required by applicable law.

Toro's Commitment to Security of Your Personal Information
We take reasonable precautions in order to protect the security of your personal information. We also take steps to maintain the accuracy and current status of personal information.

Access and Correction of your Personal Information
If you would like to review or correct your personal information, please contact us by email at legal@toro.com.

Australian Consumer Law

Australian customers will find details relating to the Australian Consumer Law either inside the box or at your local Toro Dealer.

The Toro Warranty

A Two-Year Limited Warranty

Conditions and Products Covered

The Toro Company and its affiliate, Toro Warranty Company, pursuant to an agreement between them, jointly warrant your Toro Commercial product ("Product") to be free from defects in materials or workmanship for two years or 1500 operational hours*, whichever occurs first. This warranty is applicable to all products with the exception of Aerators (refer to separate warranty statements for these products). Where a warrantable condition exists, we will repair the Product at no cost to you including diagnostics, labor, parts, and transportation. This warranty begins on the date the Product is delivered to the original retail purchaser.
* Product equipped with an hour meter.

Instructions for Obtaining Warranty Service

You are responsible for notifying the Commercial Products Distributor or Authorized Commercial Products Dealer from whom you purchased the Product as soon as you believe a warrantable condition exists. If you need help locating a Commercial Products Distributor or Authorized Dealer, or if you have questions regarding your warranty rights or responsibilities, you may contact us at:

Toro Commercial Products Service Department
Toro Warranty Company
8111 Lyndale Avenue South
Bloomington, MN 55420-1196

952–888–8801 or 800–952–2740
E-mail: commercial.warranty@toro.com

Owner Responsibilities

As the Product owner, you are responsible for required maintenance and adjustments stated in your *Operator's Manual*. Failure to perform required maintenance and adjustments can be grounds for disallowing a warranty claim.

Items and Conditions Not Covered

Not all product failures or malfunctions that occur during the warranty period are defects in materials or workmanship. This warranty does not cover the following:

- Product failures which result from the use of non-Toro replacement parts, or from installation and use of add-on, or modified non-Toro branded accessories and products. A separate warranty may be provided by the manufacturer of these items.
- Product failures which result from failure to perform recommended maintenance and/or adjustments. Failure to properly maintain your Toro product per the Recommended Maintenance listed in the *Operator's Manual* can result in claims for warranty being denied.
- Product failures which result from operating the Product in an abusive, negligent, or reckless manner.
- Parts subject to consumption through use unless found to be defective. Examples of parts which are consumed, or used up, during normal Product operation include, but are not limited to, brake pads and linings, clutch linings, blades, reels, rollers and bearings (sealed or greasable), bed knives, spark plugs, castor wheels and bearings, tires, filters, belts, and certain sprayer components such as diaphragms, nozzles, and check valves, etc.
- Failures caused by outside influence. Conditions considered to be outside influence include, but are not limited to, weather, storage practices, contamination, use of unapproved fuels, coolants, lubricants, additives, fertilizers, water, or chemicals, etc.
- Failure or performance issues due to the use of fuels (e.g. gasoline, diesel, or biodiesel) that do not conform to their respective industry standards.
- Normal noise, vibration, wear and tear, and deterioration.
- Normal "wear and tear" includes, but is not limited to, damage to seats due to wear or abrasion, worn painted surfaces, scratched decals or windows, etc.

Parts

Parts scheduled for replacement as required maintenance are warranted for the period of time up to the scheduled replacement time for that part. Parts replaced under this warranty are covered for the duration of the original product warranty and become the property of Toro. Toro will make the final decision whether to repair any existing part or assembly or replace it. Toro may use remanufactured parts for warranty repairs.

Deep Cycle and Lithium-Ion Battery Warranty:

Deep cycle and Lithium-Ion batteries have a specified total number of kilowatt-hours they can deliver during their lifetime. Operating, recharging, and maintenance techniques can extend or reduce total battery life. As the batteries in this product are consumed, the amount of useful work between charging intervals will slowly decrease until the battery is completely worn out. Replacement of worn out batteries, due to normal consumption, is the responsibility of the product owner. Battery replacement may be required during the normal product warranty period at owner's expense. Note: (Lithium-Ion battery only): A Lithium-Ion battery has a part only prorated warranty beginning year 3 through year 5 based on the time in service and kilowatt hours used. Refer to the *Operator's Manual* for additional information.

Maintenance is at Owner's Expense

Engine tune-up, lubrication, cleaning and polishing, replacement of filters, coolant, and completing recommended maintenance are some of the normal services Toro products require that are at the owner's expense.

General Conditions

Repair by an Authorized Toro Distributor or Dealer is your sole remedy under this warranty.

Neither The Toro Company nor Toro Warranty Company is liable for indirect, incidental or consequential damages in connection with the use of the Toro Products covered by this warranty, including any cost or expense of providing substitute equipment or service during reasonable periods of malfunction or non-use pending completion of repairs under this warranty. Except for the Emissions warranty referenced below, if applicable, there is no other express warranty. All implied warranties of merchantability and fitness for use are limited to the duration of this express warranty.

Some states do not allow exclusions of incidental or consequential damages, or limitations on how long an implied warranty lasts, so the above exclusions and limitations may not apply to you. This warranty gives you specific legal rights, and you may also have other rights which vary from state to state.

Note regarding engine warranty:

The Emissions Control System on your Product may be covered by a separate warranty meeting requirements established by the U.S. Environmental Protection Agency (EPA) and/or the California Air Resources Board (CARB). The hour limitations set forth above do not apply to the Emissions Control System Warranty. Refer to the Engine Emission Control Warranty Statement supplied with your product or contained in the engine manufacturer's documentation for details

Countries Other than the United States or Canada

Customers who have purchased Toro products exported from the United States or Canada should contact their Toro Distributor (Dealer) to obtain guarantee policies for your country, province, or state. If for any reason you are dissatisfied with your Distributor's service or have difficulty obtaining guarantee information, contact the Toro importer.

374-0253 Rev D