Form No. 3414-945 Rev C

TORO®

Count on it.

Operator's Manual

Groundsmaster® 5900 Rotary Mower

Model No. 31698—Serial No. 400000000 and Up
Model No. 31699—Serial No. 400000000 and Up

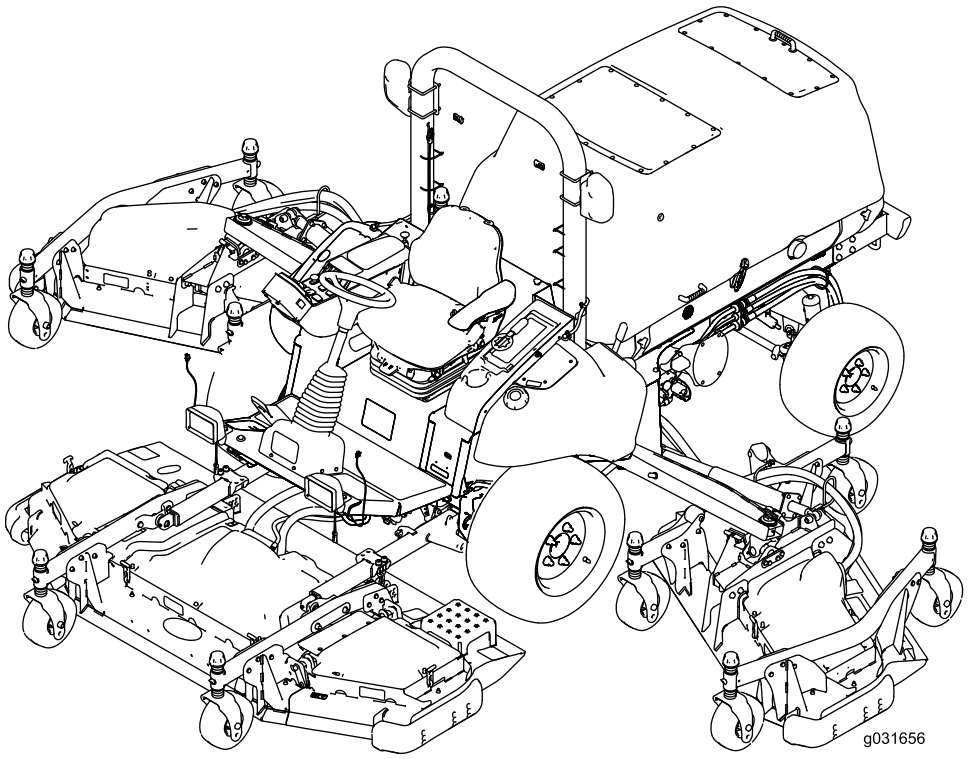

Register at www.Toro.com.
Original Instructions (EN)

CE

3414-945 C

This product complies with all relevant European directives; for details, please see the separate product specific Declaration of Conformity (DOC) sheet.

⚠ WARNING

CALIFORNIA
Proposition 65 Warning

This product contains a chemical or chemicals known to the State of California to cause cancer, birth defects, or reproductive harm.

Diesel engine exhaust and some of its constituents are known to the State of California to cause cancer, birth defects, and other reproductive harm.

It is a violation of California Public Resource Code Section 4442 or 4443 to use or operate the engine on any forest-covered, brush-covered, or grass-covered land unless the engine is equipped with a spark arrester, as defined in Section 4442, maintained in effective working order or the engine is constructed, equipped, and maintained for the prevention of fire.

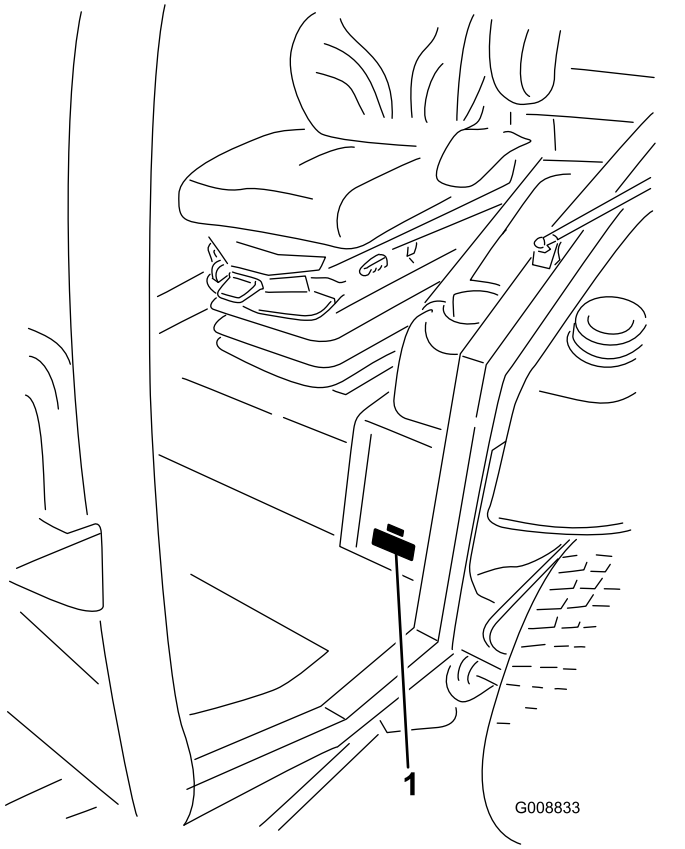

g008833

Figure 1

1. Model and serial number location

Introduction

This machine is a ride-on, rotary-blade lawn mower intended to be used by professional operators in commercial applications. It is designed primarily for mowing grass on well-maintained lawns in parks, golf courses, sports fields, along roadways, and on commercial grounds. It is not designed for mowing brush or for agricultural uses.

Read this information carefully to learn how to operate and maintain your product properly and to avoid injury and product damage. You are responsible for operating the product properly and safely.

You may contact Toro directly at www.Toro.com for product safety and operation training materials, accessory information, help finding a dealer, or to register your product.

Whenever you need service, genuine Toro parts, or additional information, contact an Authorized Service Dealer or Toro Customer Service and have the model and serial numbers of your product ready. Figure 1 identifies the location of the model and serial numbers on the product. Write the numbers in the space provided.

Model No. _____

Serial No. _____

This manual identifies potential hazards and has safety messages identified by the safety-alert symbol (Figure 2), which signals a hazard that may cause serious injury or death if you do not follow the recommended precautions.



g000502

Figure 2

1. Safety-alert symbol

This manual uses 2 words to highlight information. **Important** calls attention to special mechanical information and **Note** emphasizes general information worthy of special attention.

© 2017—The Toro® Company
8111 Lyndale Avenue South
Bloomington, MN 55420

Contact us at www.Toro.com.
Printed in the USA
All Rights Reserved

Contents

Safety 4
General Safety 4
Engine-Emission Certification 5
Safety and Instructional Decals 5
Setup 16
1 Removing the Wing-Deck-Shipping Straps and Braces 16
2 Lowering the Front-Deck Winglets 16
3 Checking the Tire and Caster Wheel Pressure 18
4 Leveling the Front, Center Deck 18
5 Leveling the Winglet Decks to the Front, Center Deck 18
6 Checking the Fluid Levels 19
7 Greasing the Machine 19
Product Overview 20
Controls 21
Cab Controls 22
Specifications 24
Attachments/Accessories 25
Before Operation 26
Before Operation Safety 26
Checking the Engine-Oil Level 26
Checking the Cooling Systems 26
Checking the Hydraulic System 26
Filling the Fuel Tank 26
Checking the Tire Pressure 28
Checking the Caster Wheel Tire Pressure 28
Checking the Torque of the Wheel-Lug Nuts 28
Adjusting the Height of Cut 28
Adjusting the Skids 31
Adjusting the Mower Deck Anti-Scalp Rollers 32
Checking a Mismatch Between Mower Decks 32
Adjusting the Mirrors 34
Aiming the Headlights 34
Checking the Safety-Interlock Switches 35
Checking the Blade Stopping Time 35
During Operation 36
During Operation Safety 36
Starting and Shutting Off the Engine 37
Raising or Lowering the Decks 37
Cutting Grass with the Machine 38
Diesel Particulate Filter Regeneration 38
Understanding the Operating Characteristics of the Machine 47
Understanding the 12 V and 24 V Electrical Systems 47
Automatic-Reversing Fan Cycle 48
Operating Tips 48
After Operation 49
After Operation Safety 49
Pushing or Towing the Machine 49
Identifying the Tie-Down Points 50
Hauling the Machine 50
Maintenance 51
Recommended Maintenance Schedule(s) 51
Daily Maintenance Checklist 52
Service-Interval Chart 53
Pre-Maintenance Procedures 54
Pre-Maintenance Safety 54
Using the Battery-Disconnect Switch 54
Raising the Machine 55
Removing and Installing the Inner-Wing-Deck Covers 55
Lubrication 56
Greasing the Bearings and Bushings 56
Engine Maintenance 59
Engine Safety 59
Servicing the Air Cleaner 59
Servicing the Engine Oil 61
Adjusting the Engine-Valve Clearance 63
Cleaning the Engine EGR Cooler 63
Inspecting the Engine Crankcase-Breather System 63
Checking and Replacing Fuel Hoses and Engine-Coolant Hoses 63
Lapping or Adjusting the Engine Intake and Exhaust Valves 63
Inspecting and Cleaning Engine-Emission-Control Components and Turbocharger 64
Servicing the Diesel-Oxidation Catalyst (DOC) and the Soot Filter 64
Fuel System Maintenance 65
Servicing the Fuel System 65
Servicing the Water Separator 65
Replacing the Fuel Filter Element 66
Electrical System Maintenance 66
Electrical System Safety 66
Locating the Fuses 66
Checking the Condition of the Batteries 68
Charging the Batteries 68
Jump-Starting the Machine 69
Removing the Batteries 70
Installing the Batteries 71
Drive System Maintenance 72
Calibrating the Traction Pedal 72
Adjusting the Traction-Pedal Angle 72
Checking the Rear Wheel Toe-In 72
Cooling System Maintenance 73
Cooling System Safety 73
Checking the Engine-Cooling System 73
Cleaning the Cooling Systems 74
Changing the Engine-Cooling-System Fluid 75
Belt Maintenance 76
Servicing the 12 V Alternator Belt 76
Servicing the 24 V Alternator Belt and AC Compressor Belt 76
Replacing the Blade-Drive Belts 76

Hydraulic System Maintenance 78
Hydraulic System Safety..... 78
Checking the Hydraulic Fluid 78
Changing the Hydraulic Fluid and Filters 79
Checking the Hydraulic Lines and Hoses..... 80
Inspecting the Hydraulic System Test Ports 80
Mower Maintenance..... 81
Pivoting (Tilting) the Front Mower Deck Upright 81
Pivoting (Tilting) the Front Mower Deck Down..... 81
Adjusting the Mower-Deck Pitch 82
Servicing the Caster-Arm Bushings 83
Servicing the Caster Wheels and Bearings..... 83
Blade Maintenance 84
Blade Safety 84
Checking for a Bent Blade 84
Removing and Installing a Blade..... 84
Inspecting and Sharpening a Blade..... 85
Correcting a Mower-Deck Mismatch 85
Cab Maintenance..... 86
Cleaning the Cab..... 86
Cleaning the Cab Air Filters 86
Cleaning the Cab Pre-Filter 87
Cleaning the Air-Conditioning-Condenser Coil 87
Storage 88
Preparing the Machine for Storage 88

Safety

This machine has been designed in accordance with EN ISO 5395:2013 and ANSI B71.4-2012.

General Safety

This product is capable of amputating hands and feet and of throwing objects. Always follow all safety instructions to avoid serious personal injury.

Using this product for purposes other than its intended use could prove dangerous to you and bystanders.

- Read and understand the contents of this *Operator's Manual* before starting the engine.
- Do not put your hands or feet near moving components of the machine.
- Do not operate the machine without all guards and other safety protective devices in place and working on the machine.
- Keep clear of any discharge opening. Keep bystanders and pets a safe distance away from the machine.
- Keep children out of the operating area. Never allow children to operate the machine.
- Stop the machine and shut off the engine before servicing, fueling, or unclogging the machine.

Improperly using or maintaining this machine can result in injury. To reduce the potential for injury, comply with these safety instructions and always pay attention to the safety-alert symbol, which means Caution, Warning, or Danger—personal safety instruction. Failure to comply with these instructions may result in personal injury or death.

You can find additional safety information where needed throughout this *Operator's Manual*.

Engine-Emission Certification

The engine in this machine is EPA Tier 4 Final and EU Stage 3b emissions compliant.

Safety and Instructional Decals

Safety decals and instructions are easily visible to the operator and are located near any area of potential danger. Replace any decal that is damaged or missing.

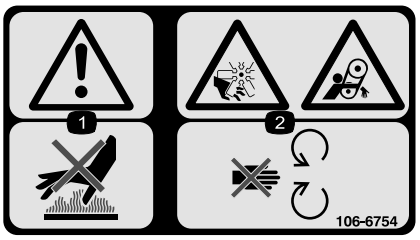

decal106-6754

106-6754

1. Warning—do not touch the hot surface.
2. Cutting/dismemberment hazard, fan and entanglement hazard, belt—stay away from moving parts.

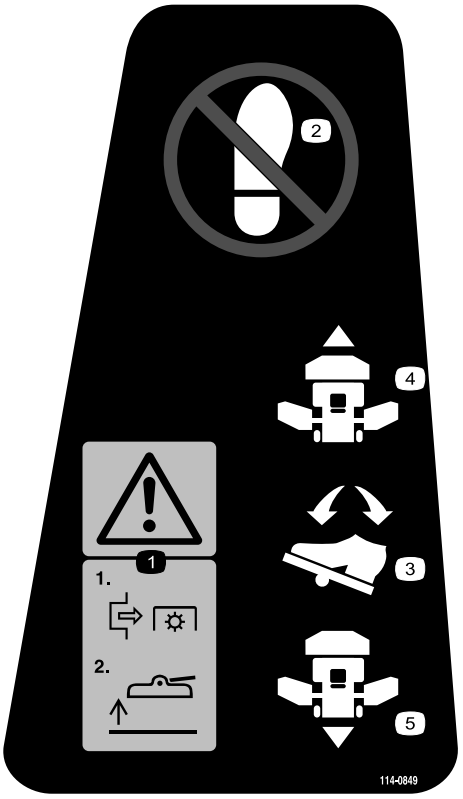

decal114-0849

114-0849

1. Warning—disengage the PTO then raise the deck.
2. No step
3. Traction-control pedal
4. Forward
5. Reverse

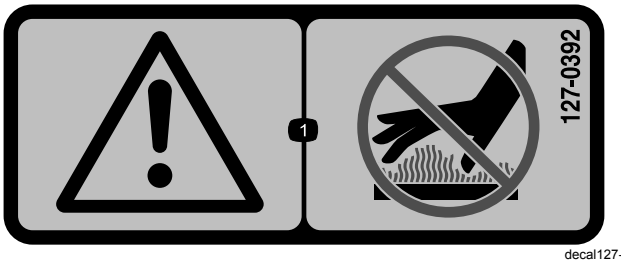

decal127-0392

127-0392

1. Warning—keep away from hot surfaces.

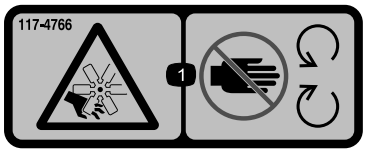

decal117-4766

117-4766

1. Cutting/dismemberment hazard, fan—stay away from moving parts; keep all guards and shields in place.



decal117-3276

117-3276

1. Engine coolant under pressure
2. Explosion hazard—read the *Operator's Manual*.
3. Warning—do not touch the hot surface.
4. Warning—read the *Operator's Manual*.



decal130-0594

130-0594

Model with Cab Only

1. Warning—read the *Operator's Manual*; when sitting in the cab, always wear a seat belt; wear hearing protection.

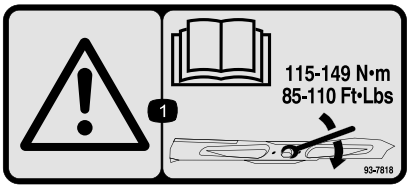

decal93-7818

93-7818

1. Warning—read the *Operator's Manual* for instructions on torquing the blade bolt/nut to 115 to 149 N·m (85 to 110 ft-lb).

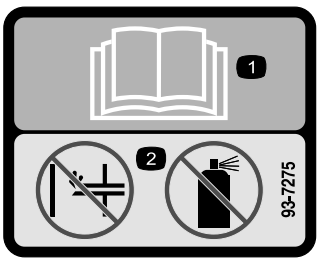

decal93-7275

93-7275

1. Read the *Operator's Manual*—do not use starting fluid to start the engine.

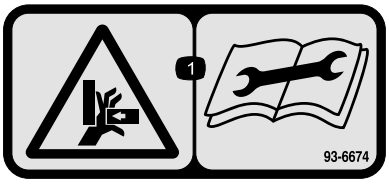

decal93-6674

93-6674

1. Crushing hazard, hand—read the instructions before servicing or performing maintenance.



decal93-6687

93-6687

1. Do not step here.

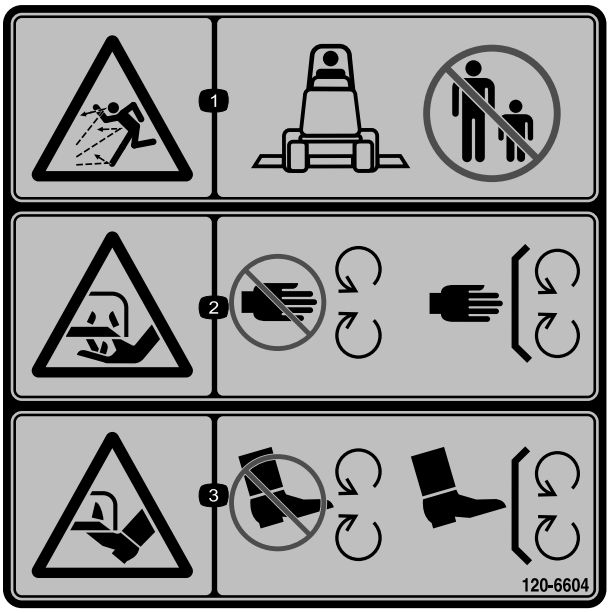

decal120-6604

120-6604

1. Thrown object hazard—keep bystanders away from the machine.
2. Cutting/dismemberment hazard of hand, mower blade—stay away from moving parts; keep all guards and shields in place.
3. Cutting/dismemberment hazard of foot, mower blade—stay away from moving parts; keep all guards and shields in place.

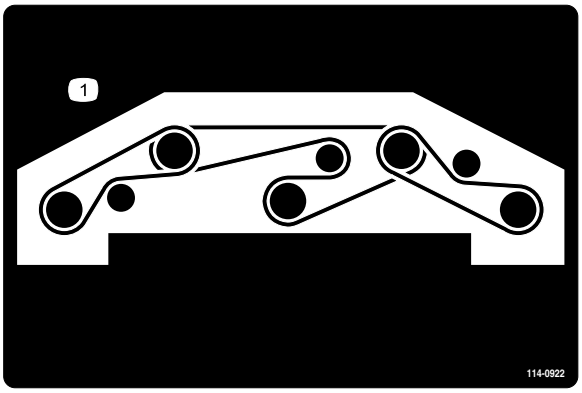

decal114-0922

114-0922

1. Belt routing

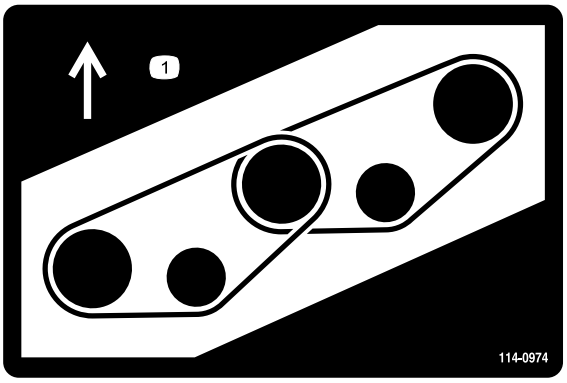

decal114-0974

114-0974

1. Belt routing

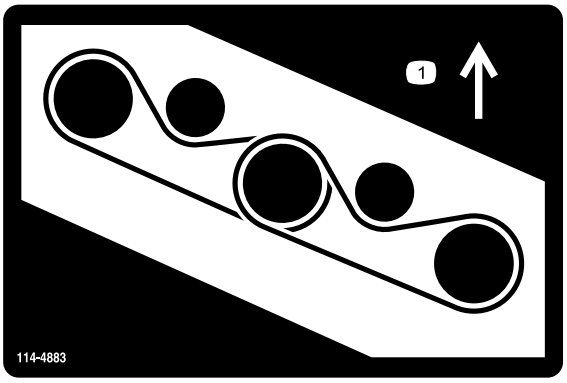

decal114-4883

114-4883

1. Belt routing

CALIFORNIA SPARK ARRESTER WARNING

Operation of this equipment may create sparks that can start fires around dry vegetation. A spark arrester may be required. The operator should contact local fire agencies for laws or regulations relating to fire prevention requirements. 117-2718

decal117-2718

117-2718

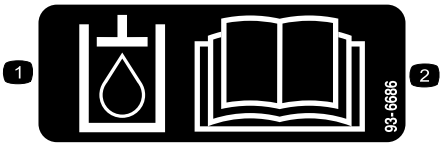

decal93-6686

93-6686

1. Hydraulic fluid
2. Read the *Operator's Manual.*

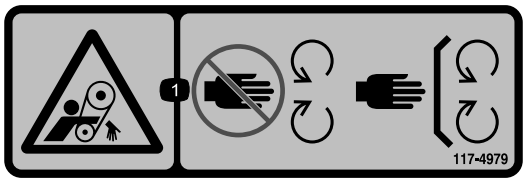

decal117-4979

117-4979

1. Entanglement hazard, belt—stay away from moving parts; keep all guards and shields in place.

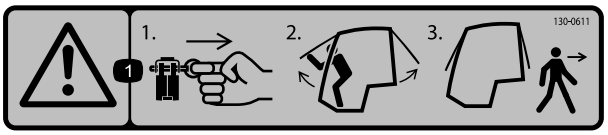

decal130-0611

130-0611

Model with Cab Only

1. Warning—1) Remove the pin; 2) Raise the doors; 3) Exit the cab

---

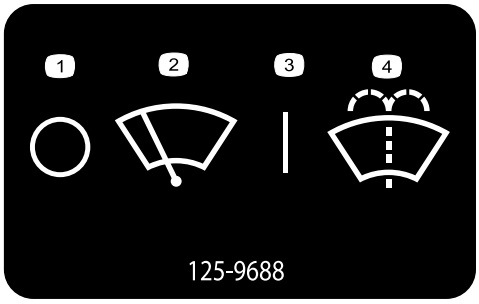

decal125-9688

125-9688

Model with Cab Only

1. Windshield wipers—off
2. Windshield wipers
3. Windshield wipers—on
4. Spray windshield washer fluid

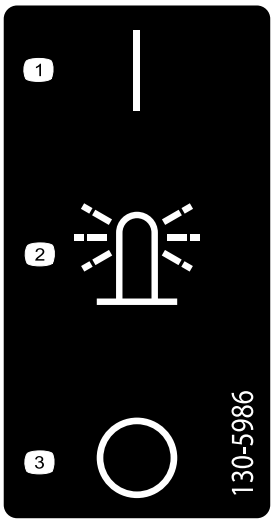

decal130-5986

130-5986

Model with Cab Only

1. On
2. Beacon
3. Off

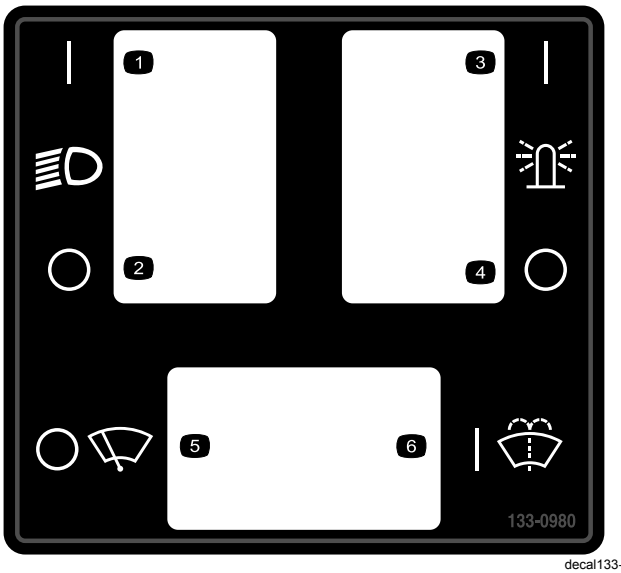

decal133-0980

133-0980

Model with Cab Only

1. Head light—on
2. Head light—off
3. Overhead light—on
4. Overhead light—off
5. Wipers—off
6. Wiper fluid—on

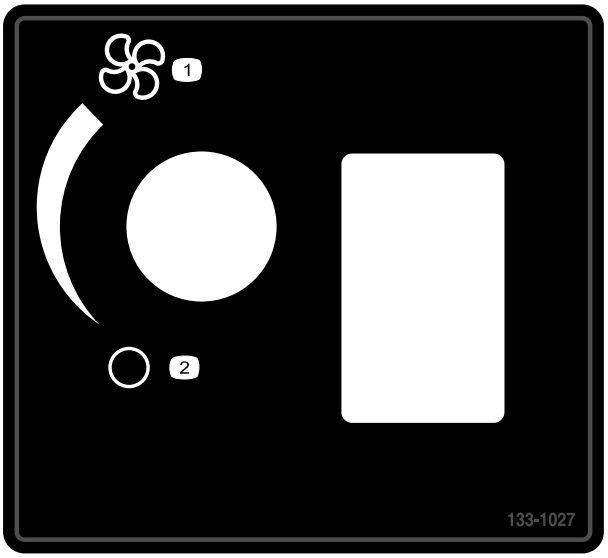

decal133-1027

133-1027

Model with Cab Only

1. Fan—maximum
2. Fan—off

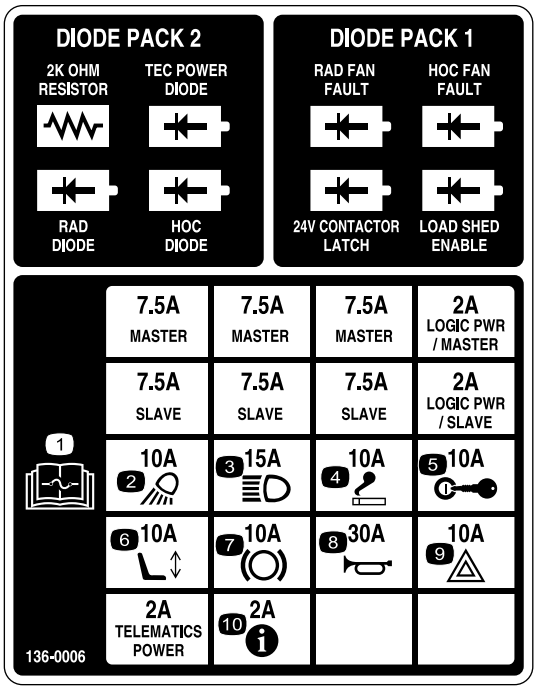

decal136-0006

136-0006

1. Read the *Operator's Manual* for information on fuses.
2. Work lights (10 A)
3. Headlights (15 A)
4. Cigarette lighter (10 A)
5. Ignition (10 A)
6. Electric seat (10 A)
7. PTO (10 A)
8. Horn (30 A)
9. Hazard light (10 A)
10. InfoCenter (2 A)

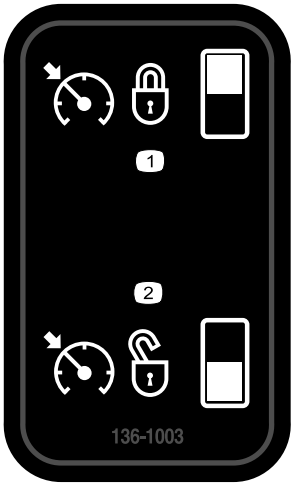

decal136-1003

136-1003

1. Cruise control—on
2. Cruise control—off



decalbatterysymbols

Battery Symbols

Some or all of these symbols are on your battery

1. Explosion hazard
2. No fire, open flame, or smoking
3. Caustic liquid/chemical burn hazard
4. Wear eye protection.
5. Read the *Operator's Manual.*
6. Keep bystanders a safe distance away from the battery.
7. Wear eye protection; explosive gases can cause blindness and other injuries.
8. Battery acid can cause blindness or severe burns.
9. Flush eyes immediately with water and get medical help fast.
10. Contains lead; do not discard.

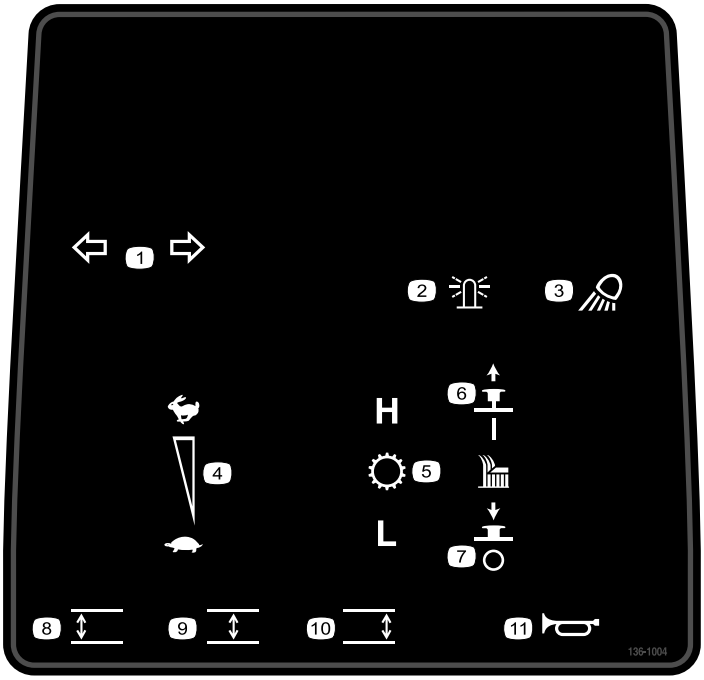

decal136-1004

136-1004

1. Turn signals
2. Beacon
3. Work light
4. Engine speed
5. Transmission
6. Cutting unit—on
7. Cutting unit—off
8. Lower the left cutting unit.
9. Lower the center cutting unit.
10. Lower the right cutting unit.
11. Horn

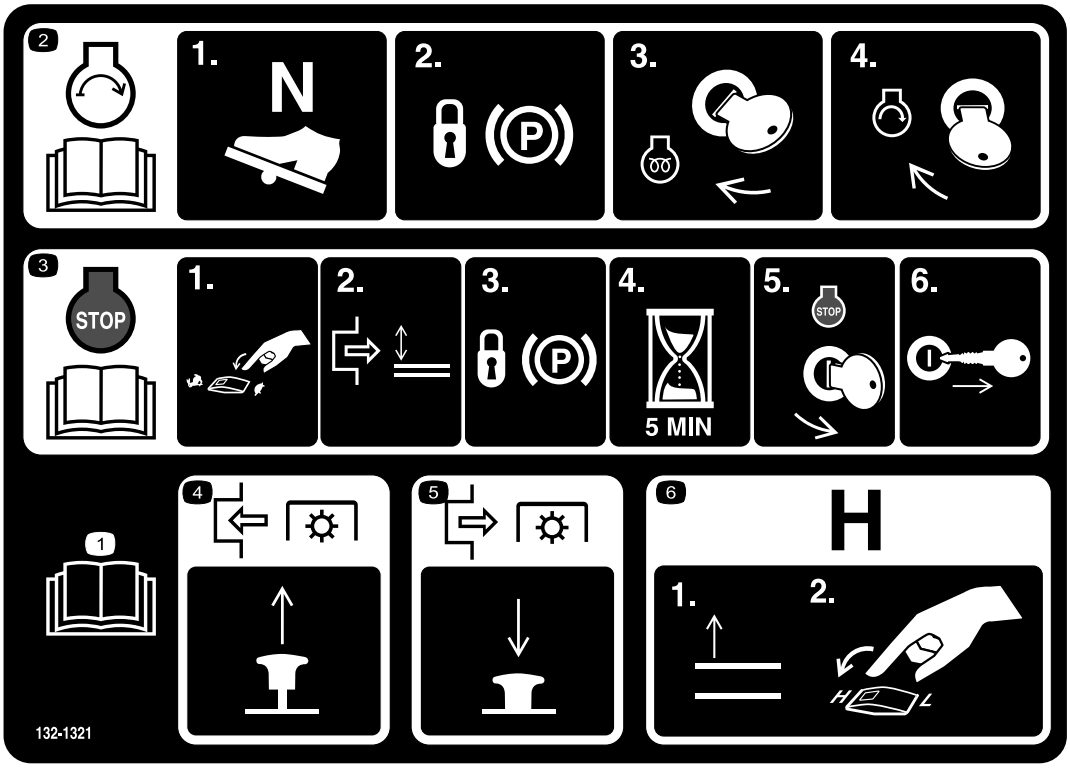

decal132-1321

132-1321

1. Read the *Operator's Manual*.
2. To start the engine: 1) Put the traction pedal in neutral; 2) Engage the parking brake; 3) Turn the key to the run position; 4) Turn the key to the engine start position.
3. To shut off the engine: 1) Move the throttle switch to slow; 2) Disengage the PTO; 3) Engage the parking brake; 4) Wait 5 minutes; 5) Turn the ignition key to Stop; and 6) Remove the key.
4. To engage the PTO, pull up the knob.
5. To disengage the PTO, push down the knob.
6. To switch the transmission to high speed, fully raise the attachments and switch the speed control to the HIGH position.

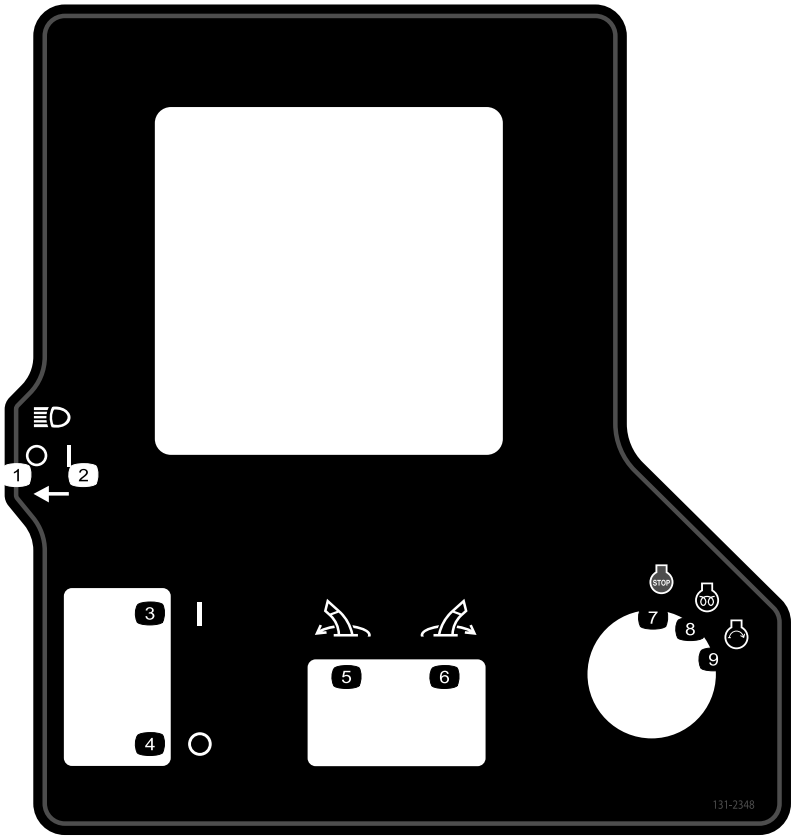

decal131-2348

131-2348

1. Headlights—off
2. Headlights—on
3. Parking brake—on
4. Parking brake—off
5. Pivot the attachment left.
6. Pivot the attachment right.
7. Engine—stop
8. Engine—run, electric preheat
9. Engine—start

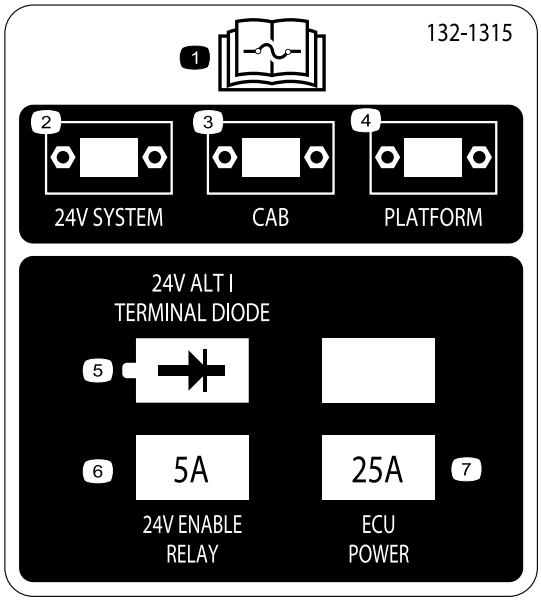

decal132-1315

132-1315

1. Read the *Operator's Manual* for more information on fuses.
2. 24V system
3. Cab
4. Platform
5. 24V alt/terminal diode
6. 24V enable relay (5 A)
7. ECU power (25 A)

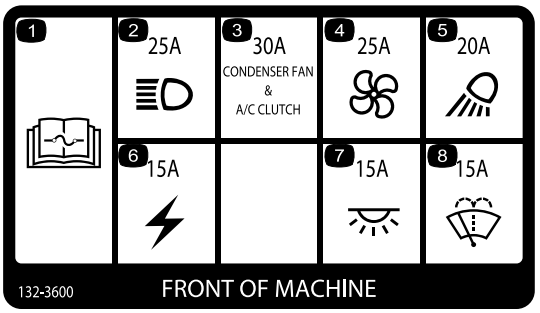

decal132-3600

132-3600

Model with Cab Only

1. Read the *Operator's Manual* for more information on fuses.
2. Headlight (25 A)
3. Condenser fan and A/C clutch (30 A)
4. Fan (25 A)
5. Working light (20 A)
6. Auxiliary power (15 A)
7. Cab light (15 A)
8. Windshield wipers (15 A)

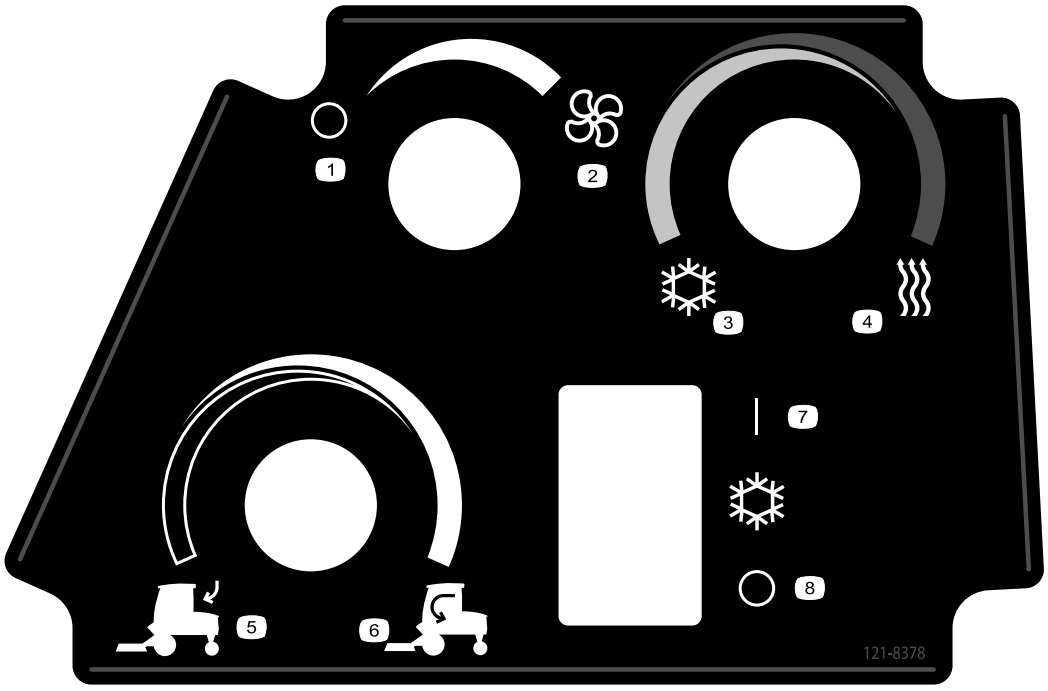

decal121-8378

121-8378

Model with Cab Only

1. Fan—off
2. Fan—on full
3. Cold air
4. Hot air
5. External air
6. Internal air
7. Air conditioner—on
8. Air conditioner—off

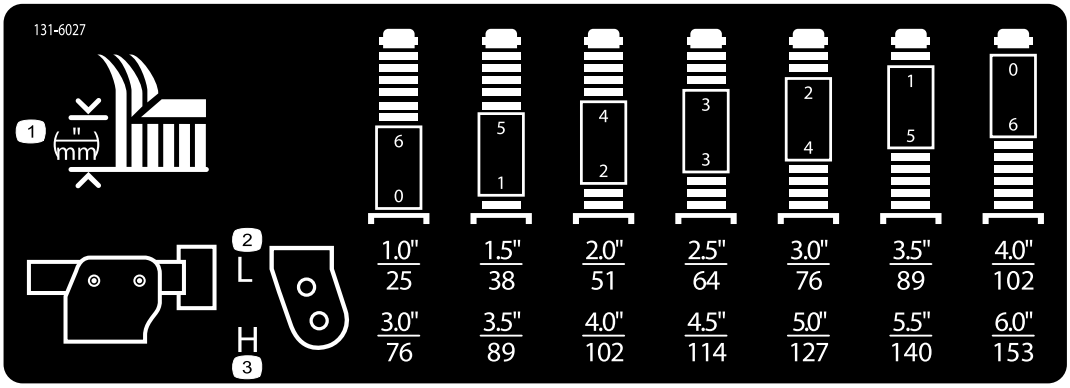

decal131-6027

131-6027

1. Height-of-cut settings
2. Upper caster position—heights of cut 25 to 102 cm (1 to 4 inches)
3. Lower caster position—heights of cut 76 to 153 cm (3 to 6 inches)

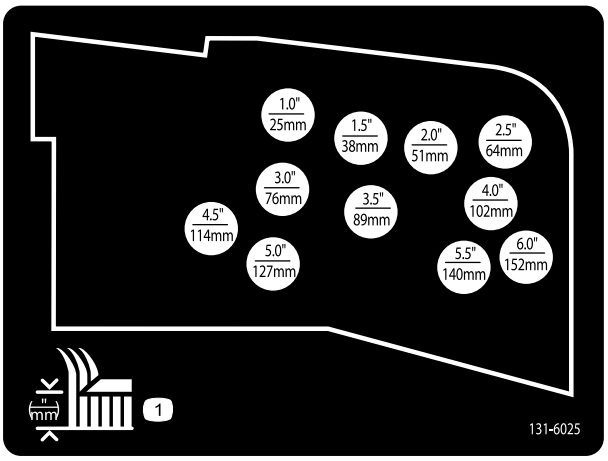

decal131-6025

131-6025

1. Height of cut

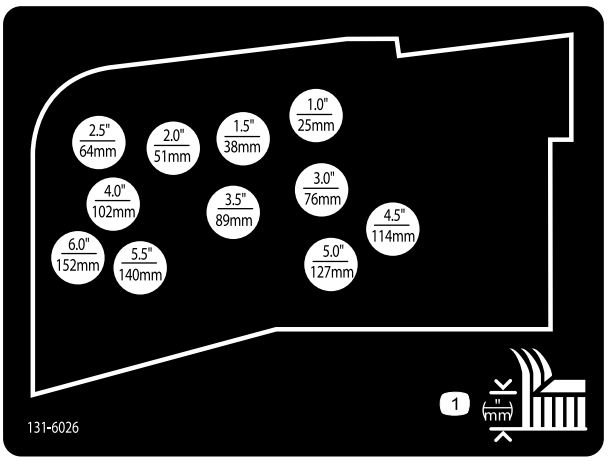

decal131-6026

131-6026

1. Height of cut

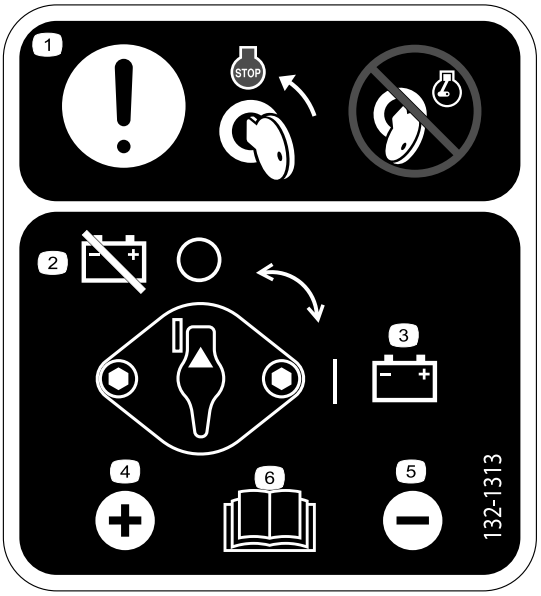

decal132-1313

132-1313

1. Attention—move the key to the engine stop position before servicing the battery; do not service the battery with the engine running.
2. Battery—disconnect
3. Battery—connect
4. Positive terminal
5. Negative terminal
6. Read the *Operator's Manual* for more information on servicing the battery.

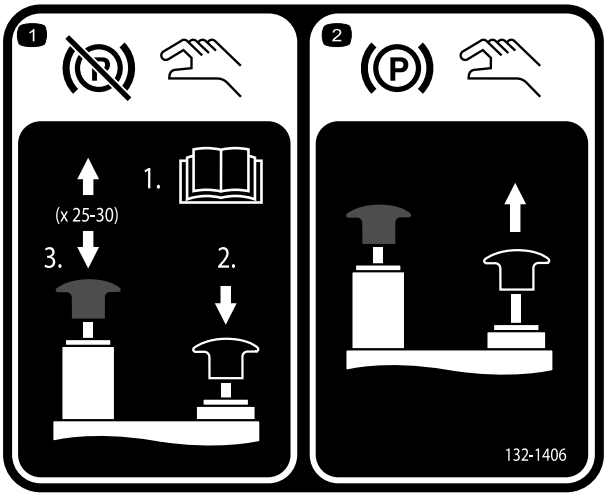

decal132-1406

132-1406

1. Releasing the parking brake when the engine is off—1) Open the tow valves on the traction pump (read the *Operator's Manual*); 2) Push down and hold the black knob to release the parking brake; 3) Work the hand pump up and down. You can release the black knob after 2 to 3 pumps. The parking brake releases after 25 to 30 pumps.
2. Engaging the parking brake—pull up the black knob; the manual valve resets when you start the engine.

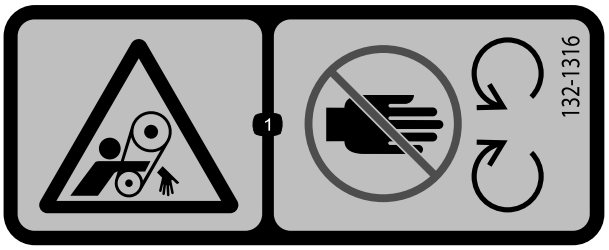

decal132-1316

132-1316

1. Entanglement hazard, belt—keep away from moving parts.

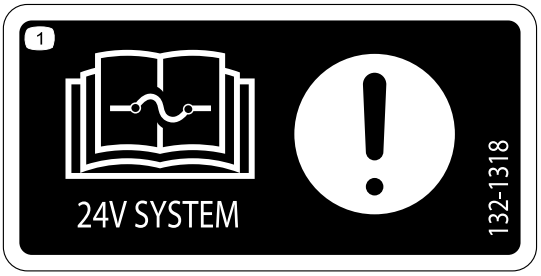

decal132-1318

132-1318

1. Attention—read the *Operator's Manual* for information on fuses.

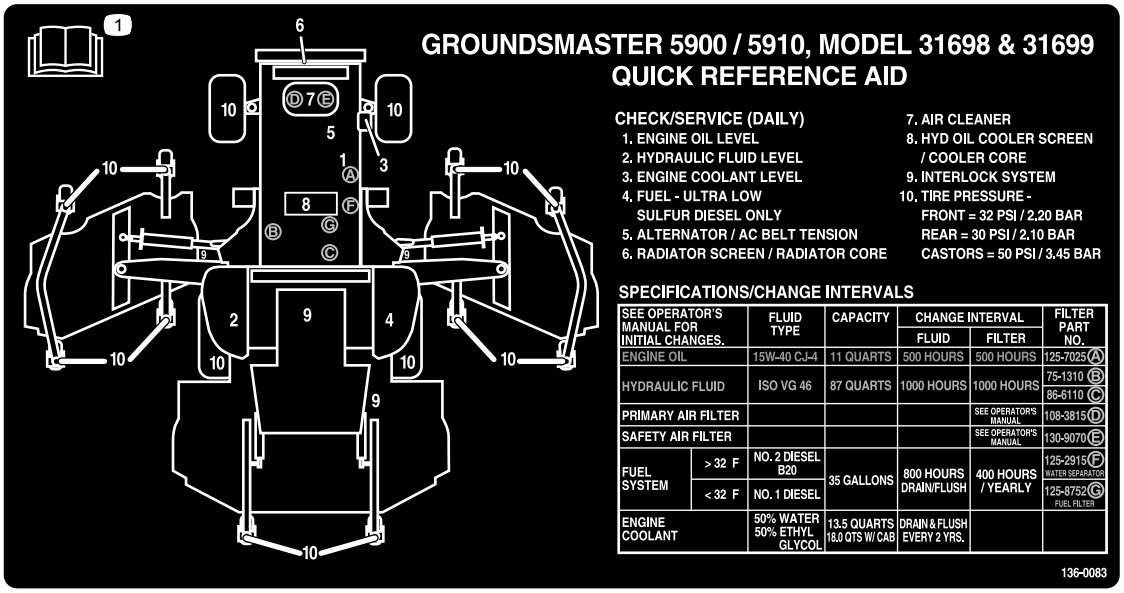

decal136-0083

136-0083

1. Read the *Operator's Manual* for information on servicing the machine.

Setup

Loose Parts

Use the chart below to verify that all parts have been shipped.

Procedure	Description	Qty.	Use
1	No parts required	–	Remove the wing-deck-shipping straps and braces.
2	Right deck cover Left deck cover V-belt	1 1 2	Lower the front-deck winglets.
3	No parts required	–	Check the tire and caster wheel pressure.
4	No parts required	–	Level the front, center deck.
5	No parts required	–	Level the winglet decks to the front, center deck.
6	No parts required	–	Check the fluid levels.
7	No parts required	–	Grease the machine.

Media and Additional Parts

Description	Qty.	Use
Operator's Manual	1	Review it before operating the machine.
Engine owner's manual	1	Use it to reference engine information.
Parts Catalog	1	Use it to reference part numbers and order replacement parts.
Operator training materials	1	Read the materials before operating the machine.
Declaration of conformity	1	For CE compliance

Note: Determine the left and right sides of the machine from the normal operating position.

1

Removing the Wing-Deck-Shipping Straps and Braces

No Parts Required

Procedure

Remove the straps and braces securing the wing decks for shipping.

2

Lowering the Front-Deck Winglets

Parts needed for this procedure:

1	Right deck cover
1	Left deck cover
2	V-belt

Procedure

1. Remove the nuts securing the front and rear stop bolts to the right winglet-deck mounts (Figure 3).

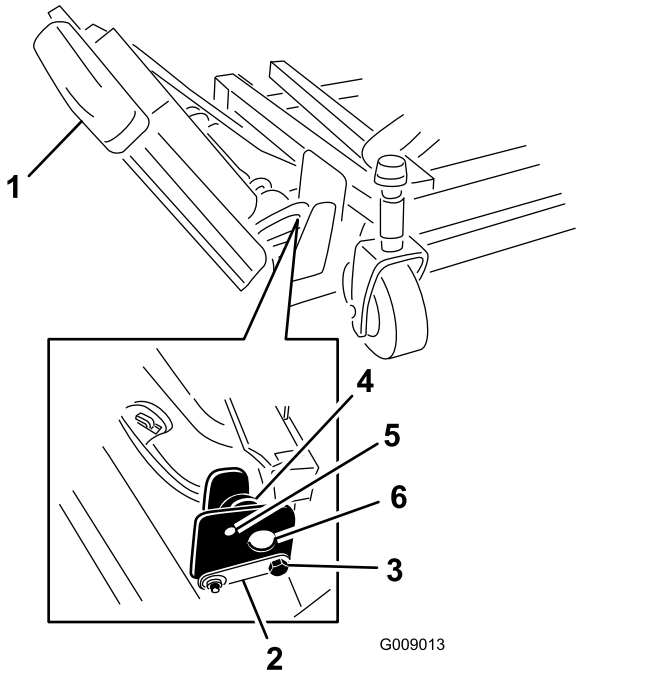

Figure 3

1. Winglet
2. Hinge pin
3. Stop bolt
4. Eccentric
5. Upper hole
6. Deck mounts

2. While supporting the right winglet, remove the front and rear stop bolts from the deck mounts (Figure 3).

   Note: Leave the eccentrics positioned between the deck mounts.

3. Lower the winglet to the operating position.
4. Install the front and rear stop bolts through the upper-mounting holes and eccentrics (Figure 4).

   Note: Ensure that the stop bolt engages the tab on the hinge pin.

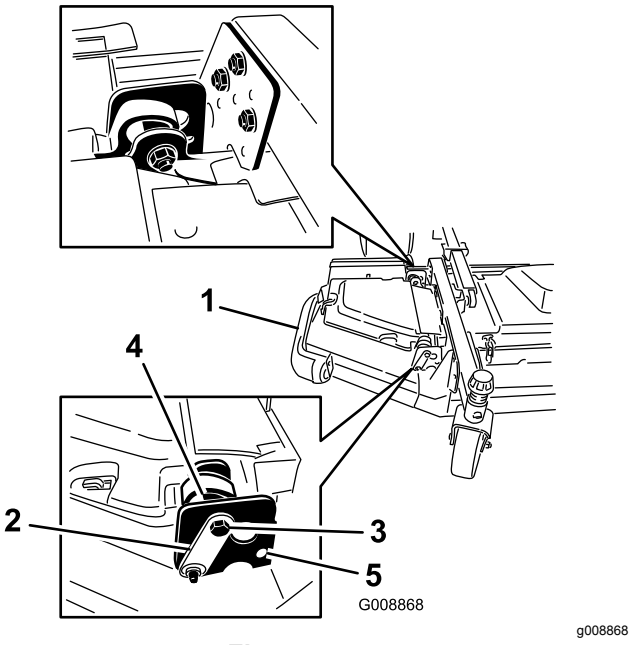

Figure 4

1. Winglet
2. Hinge pin
3. Bolt
4. Eccentric
5. Lower hole

5. Install the nuts securing the stop bolts.

   Note: Do not tighten the nuts at this time.

6. Repeat this procedure on the left winglet.
7. Install the winglet belts as follows:

   A. Start the belt around the winglet-spindle pulley and the front-deck-spindle pulley (Figure 5).

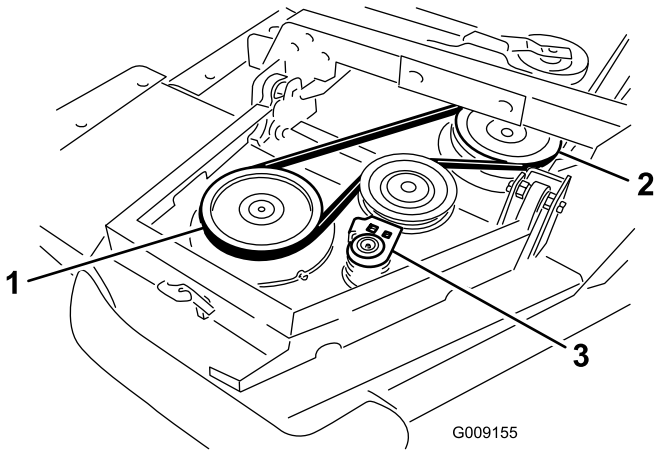

Figure 5

1. Winglet-spindle pulley
2. Front-deck-spindle pulley
3. Idler pulley

B. Using a ratchet wrench or a similar tool, move the idler pulley away from the pulleys (Figure 5).

C. Route the belt around the winglet-spindle pulley and the upper-spindle pulley on the front deck.

D. Release the idler pulley to put tension on the belt.

8. Install the winglet-deck cover and secure it with the rubber latch (Figure 6).

   Note: Ensure that you slide the cover under the front, center deck-cover tabs before inserting it onto the mounting hooks and post.

9. Repeat this procedure on the other winglet.

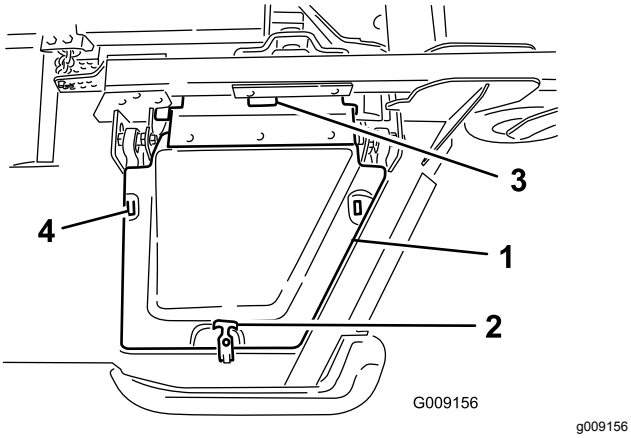

g009156

Figure 6

1. Cover
2. Rubber latch
3. Front, center deck-cover tabs
4. Mount hooks

3

Checking the Tire and Caster Wheel Pressure

No Parts Required

Procedure

Check the tire and caster wheel pressure before use; refer to Checking the Tire Pressure (page 28) and Checking the Caster Wheel Tire Pressure (page 28).

Important: **Maintain pressure in all tires to ensure a good quality-of-cut and proper machine performance.** ***Do not underinflate the tires.***

Important: **Traction performance, including tire-slip control, is dependent on the ratio of the tire size between the front and rear tires. Use only genuine Toro tires.**

4

Leveling the Front, Center Deck

No Parts Required

Procedure

Note: Perform this procedure on a flat, level surface.

Refer to Adjusting the Height of Cut (page 28).

1. Rotate the blade on each outer spindle until the ends face forward and backward.
2. Measure from the floor to the front tip of the blade.
3. Adjust the 3 mm (1/8 inch) shims on the front caster fork(s) to match the desired height of cut.
4. Rotate the blades 180° and measure from the floor to the rear-facing tip of the blade.
5. Loosen the lower jam nuts on the height-of-cut chain U-bolt.
6. Adjust the nuts to raise or lower the rear of the mower deck so that the tips of the rear blades are 6 to 10 mm (1/4 to 3/8 inch) higher than the front tips.
7. Tighten the jam nuts.

5

Leveling the Winglet Decks to the Front, Center Deck

No Parts Required

Procedure

1. Rotate the blade on each winglet so that it points side to side.
2. Loosen the bolts and nuts securing the 2 eccentric spacers to the winglets (Figure 7).

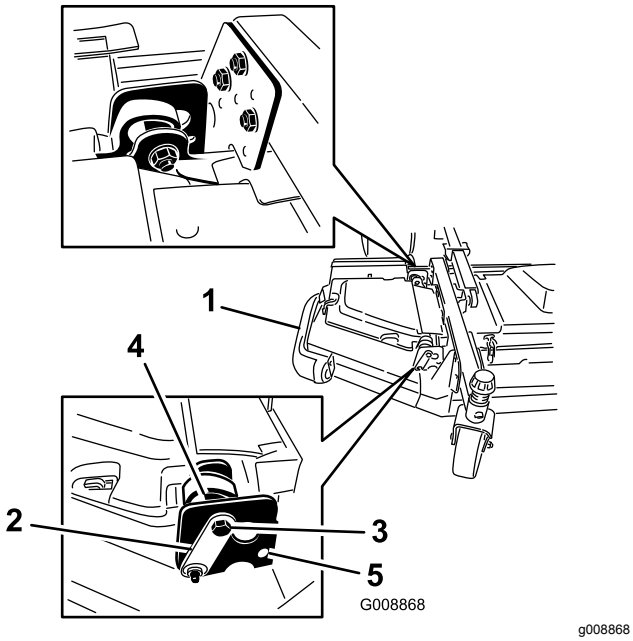

g008868

Figure 7

1. Winglet
2. Hinge pin
3. Stop bolt
4. Eccentric
5. Upper hole

3. Rotate the forward eccentric until it reaches maximum clearance with the inner-slot surface of the winglet-pivot bracket.
4. Rotate the rear (closest to the traction unit) eccentric until the outside blade tip is about 3 mm (1/8 inch) higher than the desired height of cut (Figure 7).

   Note: There is a notch on the eccentric hex, which is 180° from the lobe on the eccentric cam (Figure 8). Use the notches to reference the location of the lobes when adjusting the eccentrics.

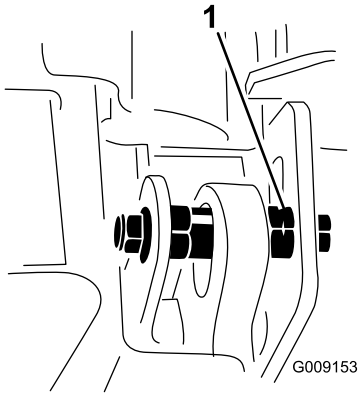

g009153

Figure 8

1. Eccentric notch

5. Tighten the bolt and nut for this eccentric to 149 N·m (110 ft-lb).
6. Adjust the forward eccentric until it just makes contact with the inner slot surface of the winglet-pivot brackets.
7. Tighten the bolt and nut for this eccentric to 149 N·m (110 ft-lb).
8. Repeat the procedure on the opposite winglet.

6

Checking the Fluid Levels

No Parts Required

Procedure

1. Check the engine-oil level before starting the engine; refer to Checking the Engine-Oil Level (page 61).
2. Check the hydraulic-fluid level before starting the engine; refer to Checking the Hydraulic Fluid (page 78).
3. Check the cooling system before starting the engine; refer to Checking the Engine-Cooling System (page 73).

7

Greasing the Machine

No Parts Required

Procedure

Grease the machine before use; refer to Lubrication (page 56). Failure to properly grease the machine results in premature failure of critical parts.

Product Overview

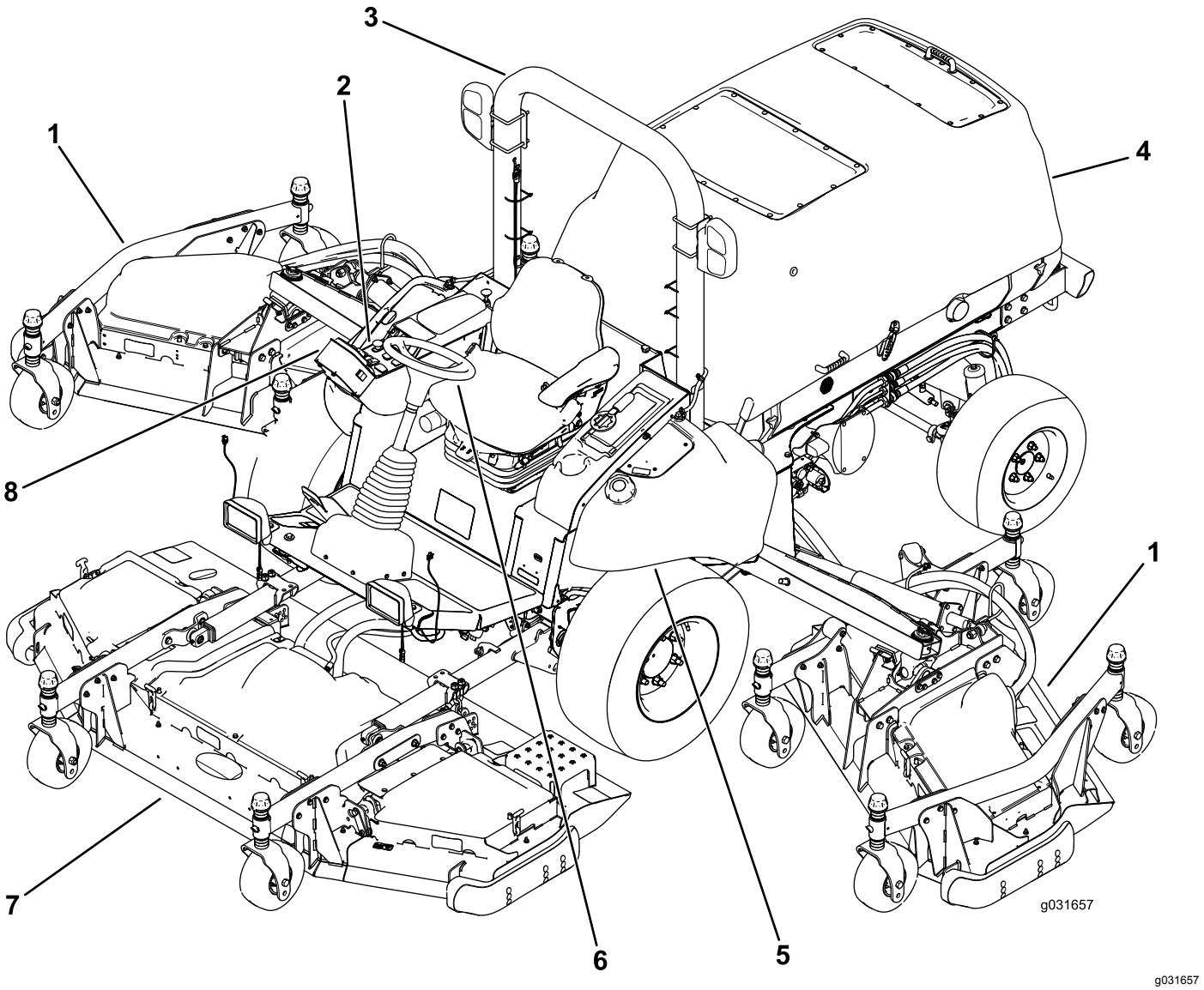

g031657

Figure 9

1. Wing mower deck
2. Control panel
3. Rollover-protection system (ROPS)
4. Hood
5. Fuel tank
6. Steering wheel
7. Front mower deck
8. InfoCenter

Controls

Note: Determine the left and right sides of the machine from the normal operating position.

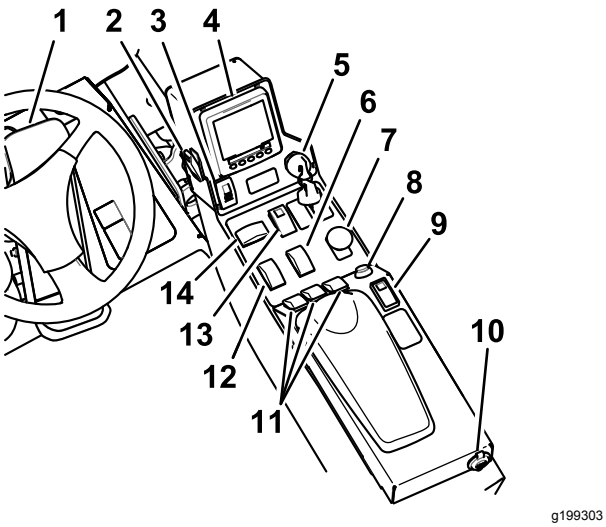

Figure 10

1. Traction pedal
2. Light switch
3. Parking-brake switch
4. InfoCenter control
5. Key switch
6. High—Low range-speed switch
7. PTO switch
8. Horn button
9. Cruise-control switch
10. USB power
11. Deck-lift switches
12. Throttle switch
13. Hazard switch
14. Turn-signal switch

Traction Pedal

The traction pedal controls the forward and reverse operation. Press the top of the pedal to move the machine forward and the bottom to move it backward. Ground speed depends on how far you press the pedal. For maximum ground speed, fully press the pedal while the throttle is in the HIGH IDLE position (Figure 10).

To stop the machine, reduce your foot pressure on the traction pedal and allow it to return to the center position.

Light Switch

Press the light switch upward to turn the lights to the ON position (Figure 10).

Press the light switch downward to turn the lights to the OFF position.

Parking-Brake Switch

The parking-brake switch requires 2 actions to engage the brake. While holding the small latch back, press the parking-brake switch forward to engage the parking brake. Press the parking-brake switch rearward to disengage the parking brake (Figure 10).

Key Switch

The key switch has 3 positions: STOP, RUN/PREHEAT, and START (Figure 10).

High-Low Range-Speed Switch

Press the front of the switch to select HIGH-SPEED RANGE. Press the rear of the switch to select LOW-SPEED RANGE. The machine must be stationary or traveling at less than 1.0 km/h (0.6 mph) to shift between HIGH and LOW (Figure 10).

PTO Switch

The PTO switch has 2 positions: OUT (start) and IN (stop). Pull out the PTO button to engage the implement or mower-deck blades. Push in the button to disengage the implement operation (Figure 10).

Cruise-Control Switch

The cruise-control switch sets your desired speed of the machine.

Move the cruise-control switch to the center position to turn the cruise control to the ON position. Press the switch forward to set the speed. Press the switch rearward to disengage the cruise control.(Figure 10).

Note: Foot pedal movement also disengages the cruise control.

When you engage the cruise control, you can change the cruise-control speed using the InfoCenter control.

Horn Button

Press the horn button to activate the horn (Figure 10).

Deck-Lift Switches

The deck-lift switches raise and lower the mower decks (Figure 10).

Press the switches forward to lower the mower deck and rearward to raise the mower deck.

Note: The decks do not lower while the machine is in the HIGH-speed range, and the decks do not raise or lower if you are out of the seat while the engine is running.

Note: The deck-raising function is limited at engine speeds below 2,000 rpm. Only 1 deck raises at a time below 2,000 rpm.

Throttle Switch

The throttle switch has 2 positions: LOW IDLE and HIGH IDLE (Figure 10).

Press the switch forward for 2 or more seconds to set the throttle at HIGH IDLE; press the switch rearward for 2 or more seconds to set the throttle at LOW IDLE; or momentarily press the switch in either direction to increase or decrease the engine speed in 100-rpm increments.

Hazard Switch

Press the hazard switch forward to engage the hazard lights and rearward to disengage the hazard lights (Figure 10).

Turn-Signal Switch

Press the left side of the turn-signal switch to activate the left-turn signal and the right side of the switch to activate the right-turn signal (Figure 10).

Note: The center position is off.

USB Power

You can insert your portable charger into the USB ports to charge a personal device, such as a phone or other electronic device (Figure 10).

Audible Alarm (Console)

The alarm is activated when a fault is detected.

The buzzer sounds when the following occur:

- The engine sends a stop fault
- The engine sends a check-engine fault
- The fuel level is low

Cab Controls

For Machines with a Cab

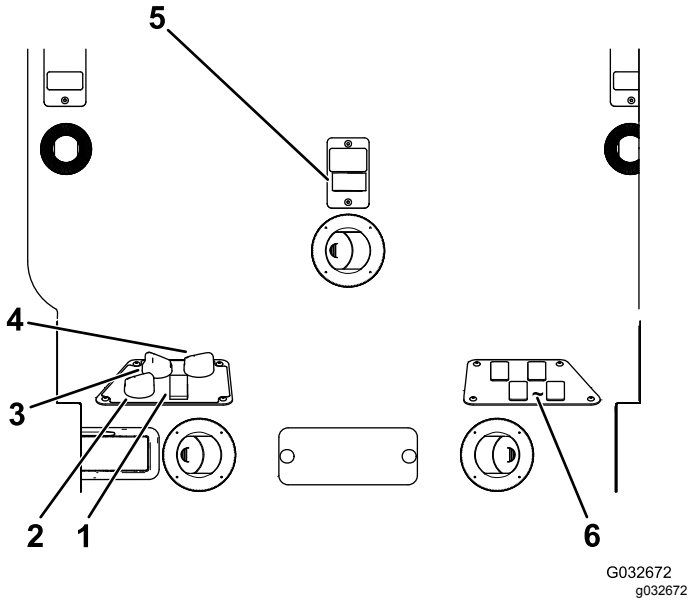

Figure 11

1. Air-conditioning switch
2. Air-recirculation control
3. Fan control
4. Temperature control
5. Windshield-wiper switch
6. Blank switches for optional kits

Air-Recirculation Control

Sets the cab to either recirculate the air in the cabin or to draw air into the cabin from outside (Figure 11).

- Set it to recirculate the air when using the air-conditioning.
- Set it to draw air in when using the heater or fan.

Fan Control

Rotate the fan control knob to regulate the speed of the fan (Figure 11).

Temperature Control

Rotate the temperature control knob to regulate the air temperature in the cab (Figure 11).

Windshield-Wiper Switch

Use this switch to turn the windshield wipers on or off (Figure 11).

Air Conditioning Switch

Use this switch to turn the air conditioning on or off (Figure 11).

Windshield Latch

Lift up the latches to open the windshield (Figure 12). Press in the latch to lock the windshield in the open

position. Pull out and down on the latch to close and secure the windshield.

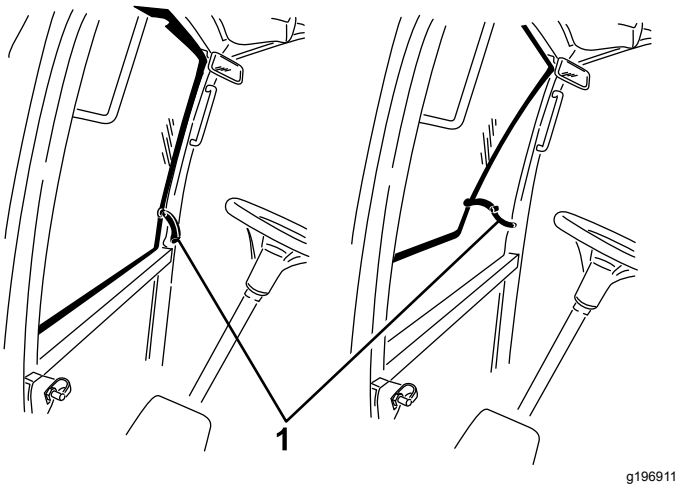

Figure 12

1. Windshield latch

Rear Window Latch

Lift up the latches to open the rear window. Press in on the latch to lock the window in OPEN position. Pull out and down on the latch to close and secure the window (Figure 12).

Important: **Close the rear window before opening the hood or damage may occur to the hood or rear window.**

Seat-Adjusting Lever

Pull out the lever to slide the seat forward or rearward.

Seat-Back-Adjusting Lever

Move the lever to adjust the seat-back angle.

Armrest-Adjusting Knob

Rotate the knob to adjust the angle of the armrest.

Specifications

Note: Specifications and design are subject to change without notice.

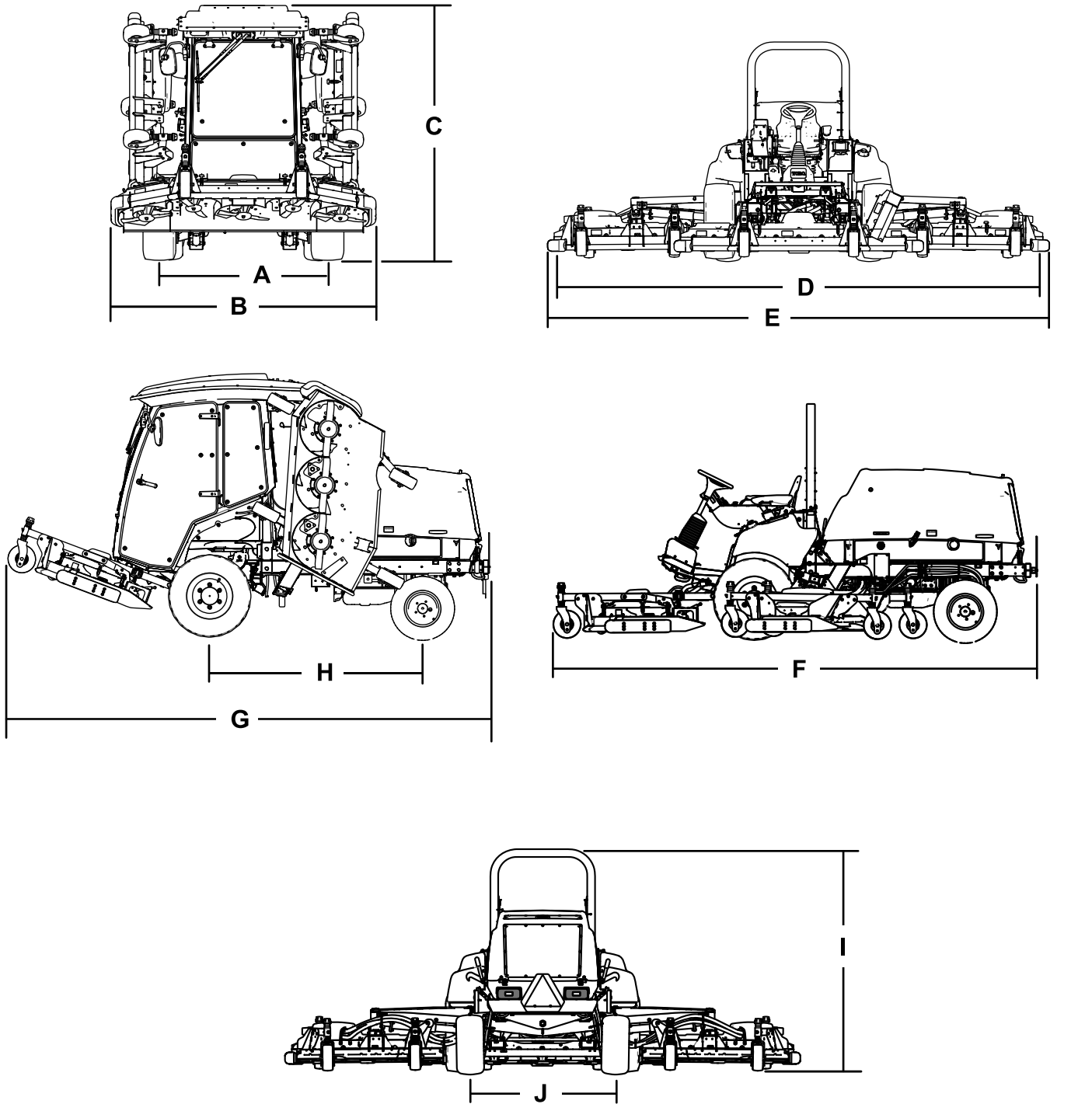

Figure 13

Description	Figure 13 reference	Dimension or Weight
Height with cab	C	240 cm (94.5 inches)
Height with roll bar	I	216 cm (85 inches)
Overall length	F	442 cm (174 inches)
Length for storage or transport	G	434 cm (171 inches)

Width of cut		
overall	D	488 cm (192 inches)
front cutting unit		234 cm (92 inches)
side cutting unit		145 cm (57 inches)
front and one side cutting unit		361 cm (142 inches)
Overall width		
cutting units down	E	506 cm (199 inches)
cutting units up (transport position)	B	251 cm (99 inches)
Wheel base	H	194 cm (76-1/2 inches)
Wheel tread (tire center to center)		
front	A	159 cm (62.5 inches)
rear	J	142 cm (56 inches)
Ground clearance		25.4 cm (10 inches)
Net weight with cab		3313 kg (7,304 lb)
Net weight with roll bar		3044 kg (6,710 lb)

Attachments/Accessories

A selection of Toro approved attachments and accessories is available for use with the machine to enhance and expand its capabilities. Contact your Authorized Service Dealer or Distributor or go to www.Toro.com for a list of all approved attachments and accessories.

Operation

Note: Determine the left and right sides of the machine from the normal operating position.

Before Operation

Before Operation Safety

General Safety

- Never allow children or untrained people to operate or service the machine. Local regulations may restrict the age of the operator. The owner is responsible for training all operators and mechanics.
- Become familiar with the safe operation of the equipment, operator controls, and safety signs.
- Know how to stop the machine and shut off the engine quickly.
- Check that operator-presence controls, safety switches, and shields are attached and functioning properly. Do not operate the machine unless they are functioning properly.
- Before mowing, always inspect the machine to ensure that the blades, blade bolts, and cutting assemblies are in good working condition. Replace worn or damaged blades and bolts in sets to preserve balance.
- Inspect the area where you will use the machine and remove all objects that the machine could throw.

Fuel Safety

- Use extreme care in handling fuel. It is flammable and its vapors are explosive.
- Extinguish all cigarettes, cigars, pipes, and other sources of ignition.
- Use only an approved fuel container.
- Never remove the fuel cap or fill the fuel tank while the engine is running or hot.
- Never refuel the machine in an enclosed space.
- Never store the machine or fuel container where there is an open flame, spark, or pilot light, such as on a water heater or other appliance.
- If you spill fuel, do not attempt to start the engine; avoid creating any source of ignition until the fuel vapors have dissipated.

Checking the Engine-Oil Level

Before you start the engine and use the machine, check the oil level in the engine crankcase; refer to Checking the Engine-Oil Level (page 61).

Checking the Cooling Systems

Before you start the engine and use the machine, check the cooling systems; refer to Checking the Engine-Cooling System (page 73) and Cleaning the Cooling Systems (page 74).

Checking the Hydraulic System

Before you start the engine and use the machine, check the hydraulic system; refer to Checking the Hydraulic Fluid (page 78).

Filling the Fuel Tank

Fuel Tank Capacity

132 L (35 US gallons)

Fuel Specification

Important: **Use only ultra-low sulphur diesel fuel. Fuel with higher rates of sulfur degrades the diesel oxidation catalyst (DOC), which causes operational problems and shortens the service life of engine components.**

Failure to observe the following cautions may damage the engine.

- Never use kerosene or gasoline instead of diesel fuel.
- Never mix kerosene or used engine oil with the diesel fuel.
- Never keep fuel in containers with zinc plating on the inside.
- Do not use fuel additives.

Petroleum Diesel

Cetane rating: 45 or higher

Sulfur content: Ultra-low sulfur (<15 ppm)

Fuel Table

Diesel fuel specification	Location
ASTM D975 No. 1-D S15 No. 2-D S15	USA
EN 590	European Union
ISO 8217 DMX	International
JIS K2204 Grade No. 2	Japan
KSM-2610	Korea

- Use only clean, fresh diesel fuel or biodiesel fuels.
- Purchase fuel in quantities that can be used within 180 days to ensure fuel freshness.

Use summer-grade diesel fuel (No. 2-D) at temperatures above -7°C (20°F) and winter-grade fuel (No. 1-D or No. 1-D/2-D blend) below that temperature.

Note: Use of winter-grade fuel at lower temperatures provides lower flash point and cold flow characteristics which eases starting and reduces fuel filter plugging.

Using summer-grade fuel above -7°C (20°F) contributes toward longer fuel pump life and increased power compared to winter-grade fuel.

Biodiesel

This machine can also use a biodiesel blended fuel of up to B20 (20% biodiesel, 80% petroleum diesel).

Sulfur content: Ultra-low sulfur (<15 ppm)

Biodiesel fuel specification: ASTM D6751 or EN14214

Blended fuel specification: ASTM D975, EN590, or JIS K2204

Important: **The petroleum diesel portion must be ultra-low sulfur.**

Observe the following precautions:

- Biodiesel blends may damage painted surfaces.
- Use B5 (biodiesel content of 5%) or lesser blends in cold weather.
- Monitor seals, hoses, gaskets in contact with fuel as they may be degraded over time.
- Fuel filter plugging may be expected for a time after converting to biodiesel blends.
- Contact your Authorized Toro Distributor if you wish for more information on biodiesel.

Adding Fuel

1. Park the machine on a level surface (Figure 14).
2. Shut off the engine and engage the parking brake.
3. Clean around the fuel-tank cap and remove the cap.
4. Add fuel and install the fuel-tank cap. Wipe up any spilled fuel.

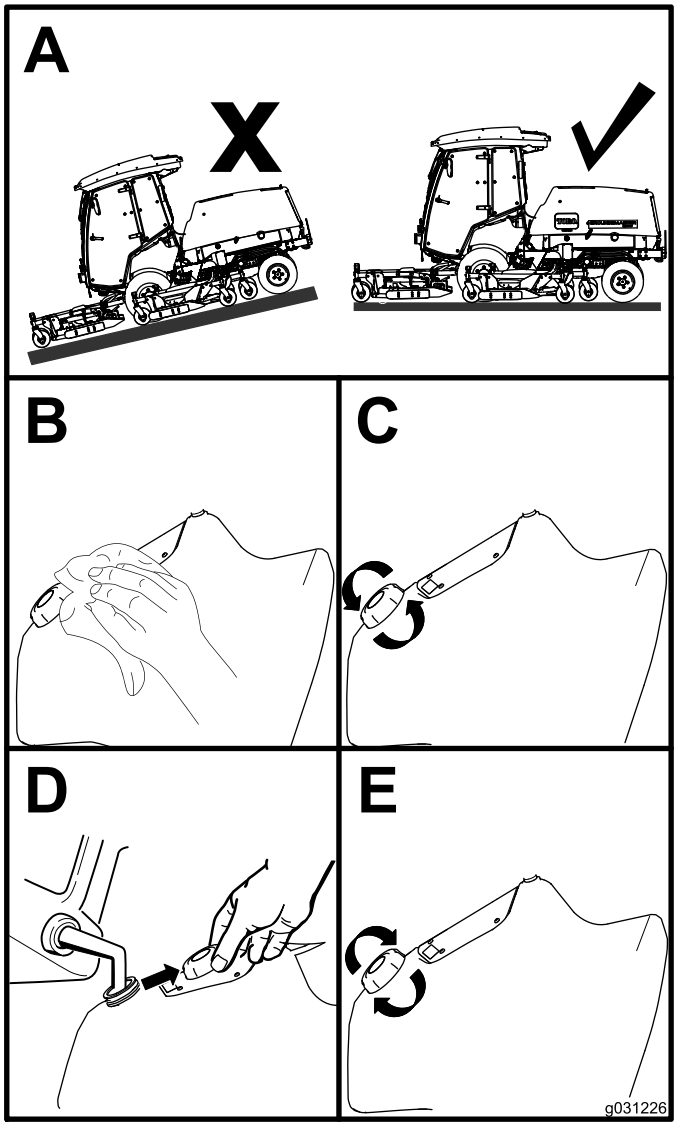

g031226

Figure 14

Checking the Tire Pressure

Service Interval: Before each use or daily

The correct air pressure in the front tires is 220 kPa (32 psi) and the rear tires is 207 kPa (30 psi) as shown in Figure 15.

Important: **Maintain pressure in all tires to ensure a good quality of cut and proper machine performance. Do not underinflate the tires.**

Check the air pressure in all the tires before operating the machine.

Traction performance, including tire-slip control, is dependent on the ratio of the tire size between the front and rear tires. Use only genuine Toro tires.

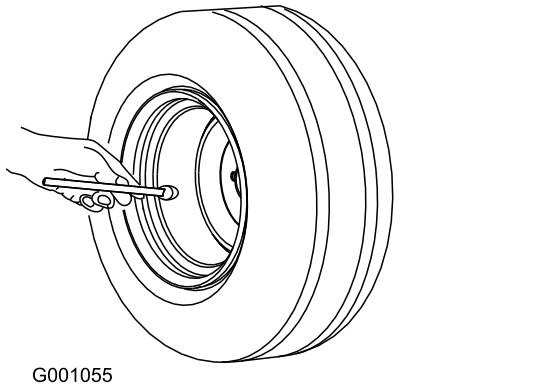

Figure 15

Checking the Caster Wheel Tire Pressure

The correct air pressure in the caster wheel tires is 340 kPa (50 psi).

Important: **Maintain pressure in all tires to ensure a good quality of cut and proper machine performance. Do not underinflate the tires.**

Check the air pressure in all the tires before operating the machine.

Checking the Torque of the Wheel-Lug Nuts

Service Interval: After the first 10 hours

Every 250 hours

⚠ WARNING

Failure to maintain the proper torque of the wheel nuts could result in failure or loss of a wheel, and may result in personal injury.

Torque the front and rear-wheel nuts to 135 to 150 N·m (100 to 110 ft-lb) according to the maintenance schedule.

Adjusting the Height of Cut

You can adjust the height of cut from 25 to 153 mm (1 to 6 inches) in 13 mm (1/2 inch) increments. To adjust the height of cut, position the caster-wheel axles in the upper or lower holes of the caster forks, add or remove an equal number of spacers from the caster forks, and adjust the rear chain (front deck only) to the desired holes.

Adjusting the Front Mower Deck

1. Start the engine and raise the mower decks so you can change the height of cut.
2. Shut off the engine and remove the key after the mower deck is raised.
3. Position the caster-wheel axles in the same holes in all of the caster forks; refer to the chart (Figure 16) to determine the correct holes for the setting.

   Note: To prevent grass buildup between the wheel and the fork, operate the machine at the 76 mm (3 inches) height of cut or higher and install the axle bolt in the bottom caster-fork hole. When operating the machine at a height of cut lower than 76 mm (3 inches) and when you detect grass buildup, reverse the direction of the machine to pull any clippings away from the wheel and fork.

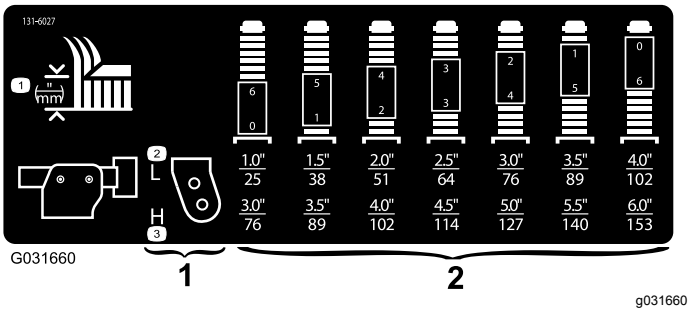

Figure 16

1. Caster wheel height-of-cut mounting holes
2. Caster fork height-of-cut spacers

4. Using the supplied caster-cap wrench, loosen the tensioning cap and remove it from the caster-spindle shaft and slide the caster shaft out of the caster arm (Figure 17).

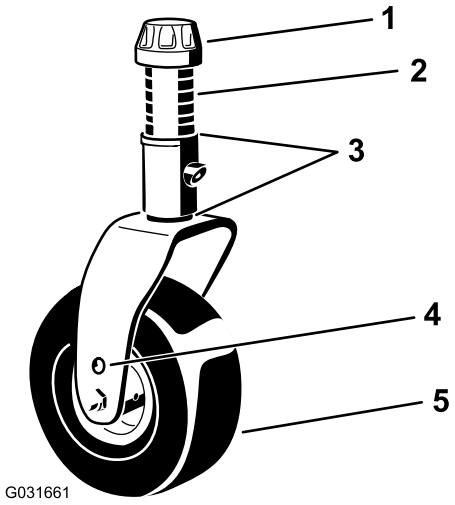

g031661

Figure 17

1. Tensioning cap
2. Spacers (6)
3. Shims (2 top and 2 bottom)
4. Top axle-mounting hole
5. Caster wheel

5. Slide the appropriate number of spacers onto the shaft to get the desired height of cut.

   Note: Refer to the chart to determine the combinations of spacers for the setting (Figure 16).

   Note: You may use the shims in any combination above or below the caster-arm hub (as required) to achieve the desired height of cut or deck level.

6. Push the caster shaft through the front caster arm.
7. Install the shims (as originally installed) and the remaining spacers onto the shaft (Figure 17).
8. Install the tensioning cap and tighten it with the supplied caster-cap wrench to secure the assembly (Figure 17).
9. Remove the hairpin cotter and clevis pin securing the height-of-cut chains to the rear of the mower deck (Figure 18).

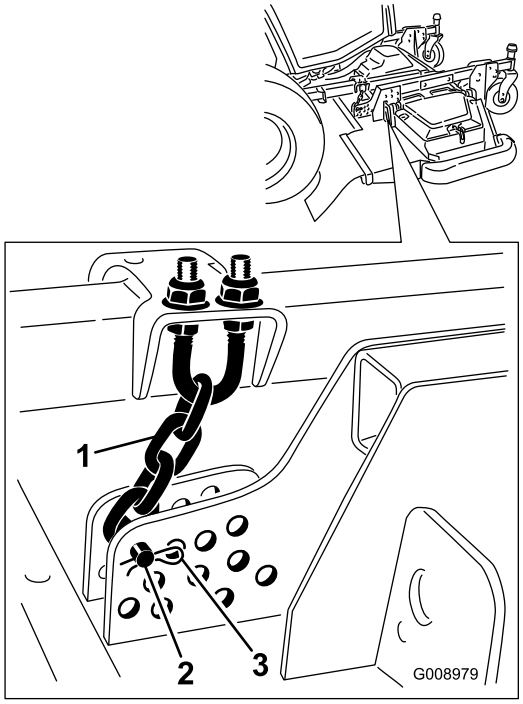

g008979

Figure 18

1. Height-of-cut chain
2. Clevis pin
3. Hairpin cotter

10. Mount the height-of-cut chains to the desired height-of-cut hole with the clevis pin and hairpin cotter (Figure 19).

    Note: When mowing at a height of cut below 51 mm (2 inches), move the skids, gage wheels, and rollers to the highest holes.

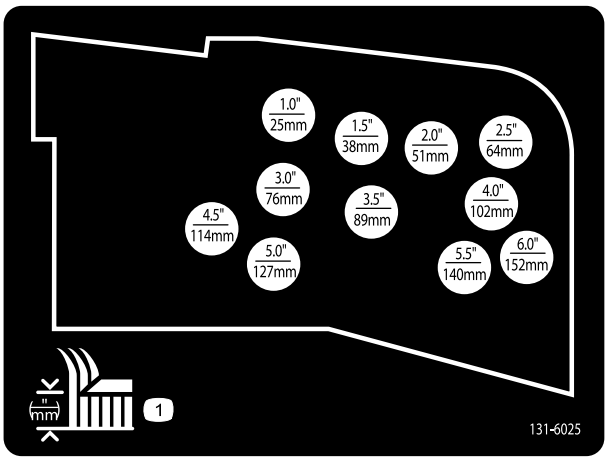

decal131-6025

Figure 19

Adjusting the Wing Mower Decks

1. Start the engine and raise the mower decks so you can change the height of cut.
2. Shut off the engine and remove the key after you raise the mower deck.
3. Position the caster-wheel axles in the same holes in all of the caster forks; refer to the chart to determine the correct holes for the height-of-cut setting (Figure 20).

   Note: To prevent grass buildup between the wheel and the fork, operate the machine at the 76 mm (3 inches) height of cut or higher and install the axle bolt in the bottom caster-fork hole. When operating the machine at a height of cut lower than 76 mm (3 inches) and when you detect grass buildup, reverse the direction of the machine to pull any clippings away from the wheel and fork.

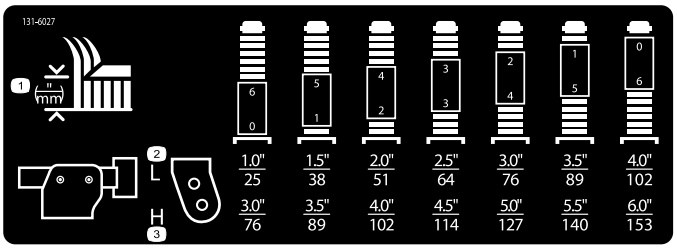

g031395

g031395

Figure 20

4. Using the supplied caster-cap wrench, loosen the tensioning cap and remove it from the caster-spindle shaft and slide the caster shaft out of the caster arm (Figure 21).

   Note: You may use shims in any combination above or below the caster arm hub as required to achieve the desired height of cut or deck level.

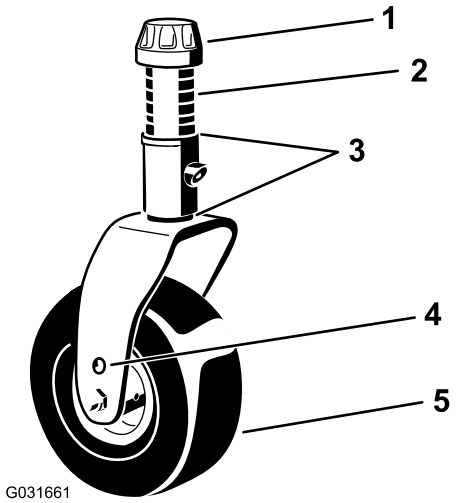

G031661

g031661

Figure 21

1. Tensioning cap
2. Spacers (6)
3. Shims (2 top and 2 bottom)
4. Top axle-mounting hole
5. Caster wheel

5. 5. Install 2 shims onto the shaft as originally installed and slide the appropriate number of spacers onto the shaft to get the desired height of cut.
6. Push the caster shaft through the caster arm.
7. Install the shims (as originally installed) and the remaining spacers onto the shaft.
8. Install the tensioning cap and tighten it with the supplied caster-cap wrench to secure the assembly.

Adjusting the Skids

Adjusting the Inner Skids

Mount the inner skids in the lower position when operating at heights of cut greater than 51 mm (2 inches) and in the higher position when operating at heights of cut lower than 51 mm (2 inches).

Adjust the inner skids (Figure 22).

Important: **Torque the screw at the front of each inner skid to 9 to 11 N·m (80 to 100 in-lb).**

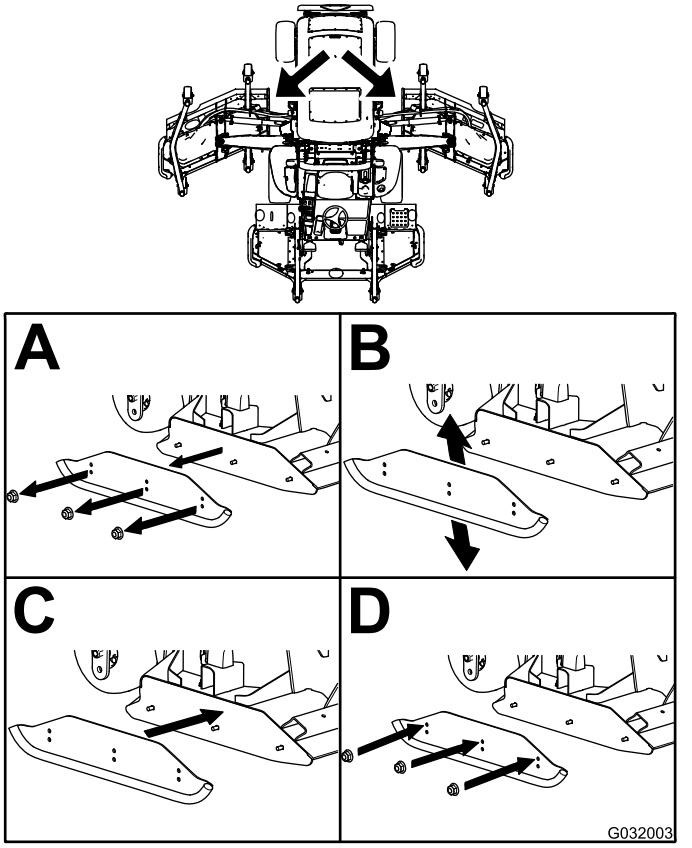

g032003

Figure 22

Adjusting the Outer Skids

Mount the outer skids in the lower position when operating at heights of cut greater than 51 mm (2 inches) and in the higher position when operating at heights of cut lower than 51 mm (2 inches).

Note: When the outer skids become worn, you can switch them to the opposite sides of the mower by flipping them over. This allows you to use the outer skids longer before replacing them.

Adjust the outer skids (Figure 23).

Important: **Torque the screw at the front of each outer skid to 9 to 11 N·m (80 to 100 in-lb).**

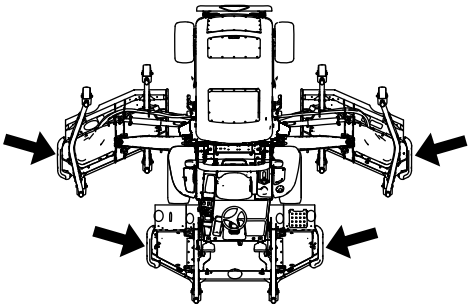

g202202

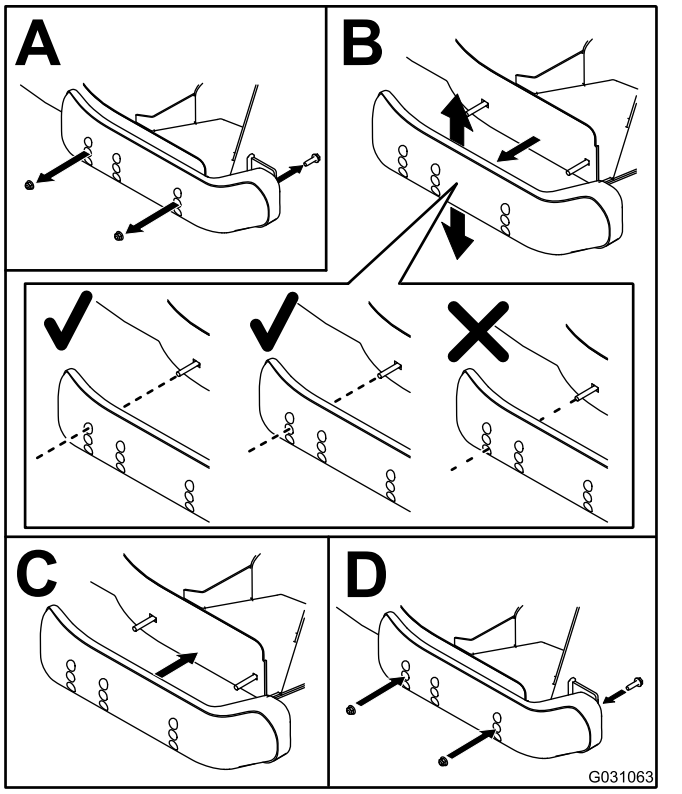

g031063

Figure 23

Adjusting the Mower Deck Anti-Scalp Rollers

Mount the roller in the lower position when operating at heights of cut greater than 51 mm (2 inches) and in a higher position when operating at heights of cut lower than 51 mm (2 inches).

Adjusting the Roller

1. Remove the roller shaft, screw, and nut securing the roller to the deck bracket (Figure 24).

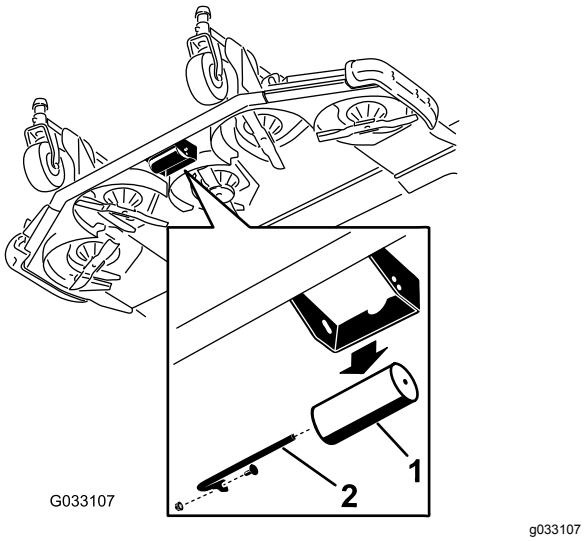

Figure 24

1. Roller
2. Roller shaft, screw, and nut

2. Align the roller with the top holes and install the shaft with the screw and nut (Figure 25).

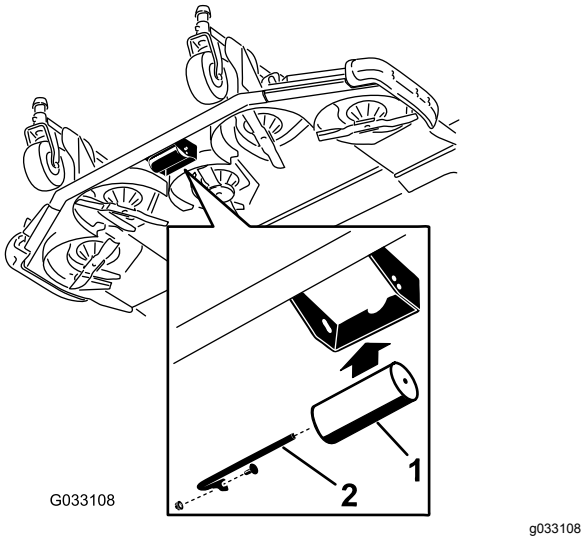

Figure 25

1. Roller
2. Roller shaft, screw, and nut

Checking a Mismatch Between Mower Decks

Due to differences in grass conditions and the counterbalance setting of the traction unit, you should cut the grass and check the appearance before you begin mowing the entire area.

1. Set all mower decks to the desired height of cut; refer to Adjusting the Height of Cut (page 28).
2. Check and adjust the front and rear tire pressure.

   Note: The correct air pressure in the front tires is 220 kPa (32 psi) and the rear tires is 207 kPa (30 psi).
3. Check and adjust all caster tire pressures to 340 kPa (50 psi).
4. Check the lift and counterbalance pressures with the engine throttle at HIGH IDLE using the test ports; refer to Inspecting the Hydraulic System Test Ports (page 80).
5. Check for bent blades; refer to Checking for a Bent Blade (page 84).
6. Cut grass in a test area to determine if all mower decks are mowing at the same height.
7. If you need to adjust a mower deck, find a flat surface using a 2 m (6 ft) or longer straight edge to ensure that the surface is flat.
8. To ease measuring the blade plane, raise the height of cut to the highest position; refer to Adjusting the Height of Cut (page 28).
9. Lower the mower decks onto the flat surface and remove the covers from the tops of the mower decks.

Wing Mower Decks

1. Rotate the blade of each spindle until the ends face forward and backward.
2. For the outside blade spindle only, equally adjust the shims on the front caster forks to match the desired height of cut.
3. Measure from the floor to the front tip of the mowing blade.
4. Rotate the blade 180° and measure from the floor to the tip of the mowing blade.

   Note: The rear of the blade should be 7.5 mm (0.3 inch) higher than the front.

   Note: If you need to make an adjustment, adjust the shims on the rear caster forks.

Matching the Height of Cut Between Mower Decks

1. Position the blade side to side on the outside spindle of both wing mower decks.
2. Measure from the floor to the tip of the cutting edge on both units and compare the measurements.

   Note: These numbers should be within 3 mm (1/8 inch) of each other. Make no adjustment at this time.
3. Position the blade side to side on the inside spindle of the wing mower deck and the corresponding outside spindle of the front mower deck.
4. Measure from the floor to the tip of the cutting edge on the inside edge of the wing mower deck to the corresponding outside edge of the front mower deck and compare.

   Note: The wing mower deck caster wheels should remain on the ground with counterbalance applied.

   Note: If you need to make an adjustment to match the cut between the front and wing mower deck, make them to the wing mower decks only.
5. If the inside edge of the wing mower deck is too high relative to the outside edge of the front mower deck, remove 1 shim from the bottom of the front, inside caster arm on the wing mower deck (Figure 26 and Figure 27).

   Note: Check the measurement between the outside edges of both wing mower decks and the inside edge of the wing mower deck to outside edge of the front mower deck again.

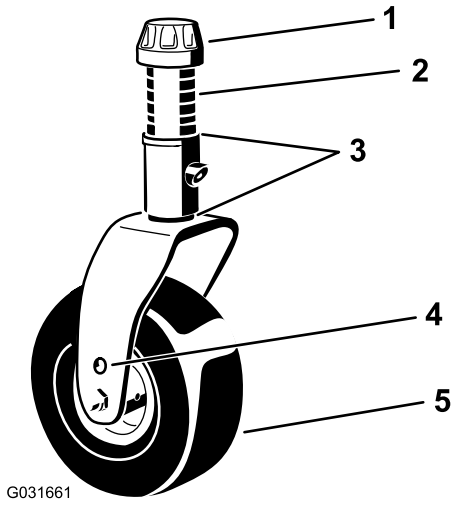

g031661

Figure 26

1. Tensioning cap
2. Spacers (6)
3. Shims (2 top and 2 bottom)
4. Top axle-mounting hole
5. Caster wheel

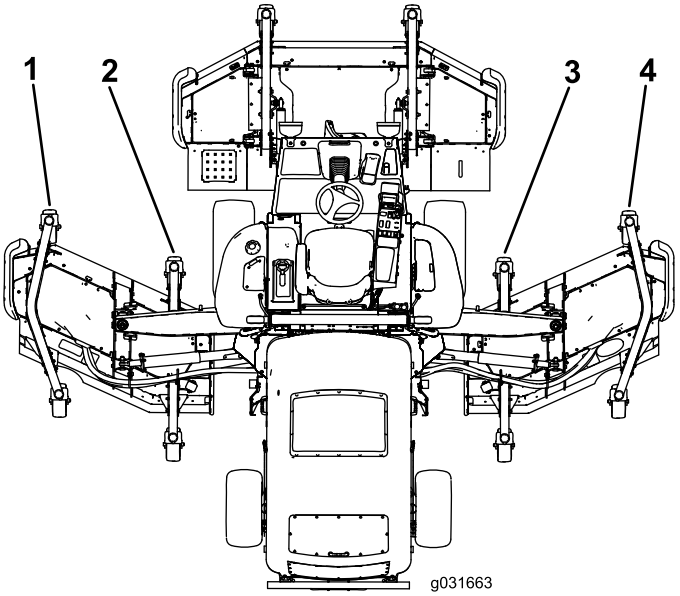

g031663

Figure 27

1. Left, front, outside caster arm
2. Left, front, inside caster arm
3. Right, front, inside caster arm
4. Right, front, outside caster arm

6. If the inside edge is still too high, remove an additional shim from the bottom of the front, inside caster arm of the wing mower deck and 1 shim from the front, outside caster arm of the wing mower deck (Figure 26 and Figure 27).
7. If the inside edge of the wing mower deck is too low relative to the outside edge of the front mower deck, add 1 shim (1/8 inch) to the bottom of the front, inside caster arm on the wing mower deck (Figure 26 and Figure 27).

Note: Check the measurement between the outside edges of both wing mower decks and the inside edge of the wing mower deck to the outside edge of the front mower deck again.

8. If the inside edge is still too low, add an additional shim to the bottom of front, inside caster arm of the wing mower deck and 1 shim to the front, outside caster arm of the wing mower deck.
9. Once the mowing height matches at the edges of the front and wing mower decks, verify that the mower deck unit pitch is still 7.6 mm (0.3 inch).

Adjusting the Mirrors

For Machines with a Cab

Rear-View Mirror

While sitting in the seat, adjust the rear-view mirror to attain the best view out of the rear window. Pull the lever rearward to tilt the mirror to reduce the brightness and glare of light (Figure 28).

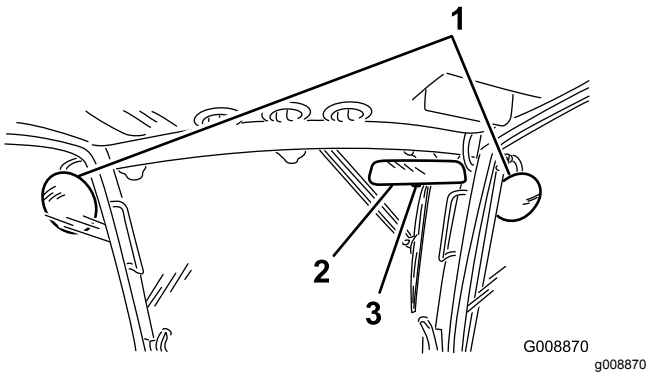

Figure 28

1. Side-view mirrors
2. Rear-view mirror
3. Lever

Side-View Mirrors

While sitting in the seat, have another person adjust the side-view mirrors to attain the best view around the side of the machine (Figure 28).

Aiming the Headlights

Model 31698 Only

1. Loosen the mounting nuts and position each headlight so that it points straight ahead.

   Note: Tighten the mounting nut just enough to hold the headlight in position.
2. Place a flat piece of sheet metal over the face of the headlight.
3. Mount a magnetic protractor onto the plate.
4. While holding the assembly in place, carefully tilt the headlight downward 3° then tighten the nut.
5. Repeat this procedure on the other headlight.

Checking the Safety-Interlock Switches

⚠ CAUTION

If safety-interlock switches are disconnected or damaged, the machine could potentially operate unexpectedly, causing personal injury.

- **Do not tamper with or disable the safety systems.**
- **Check the operation of the interlock switches daily and replace any damaged switches before operating the machine.**

The machine safety-interlock system is designed to disable the traction drive when the operator leaves the seat with the traction pedal out of the NEUTRAL position. The deck drive also disengages under the same condition. However, you may get off the seat while the engine is running if the traction pedal is in the NEUTRAL position.

1. Drive the machine slowly to a large, open area.
2. Lower the mower deck(s), shut off the engine, and engage the parking brake.

Checking the Traction Neutral Safety-Interlock Function

1. Move the traction pedal out of the NEUTRAL position and start the engine.

   Note: The engine should not start. If it does start, there is a malfunction in the interlock system that you should correct before resuming operation.
2. Remove your foot from the traction pedal, start the engine, and engage the parking brake.
3. With the engine running, move the traction pedal out of the NEUTRAL position.

   Note: The traction drive should not function. If it does function, there is a malfunction in the interlock system that you should correct before resuming operation.

Checking the PTO Safety-Interlock Function

1. Start the engine.
2. With the engine running, rise from the seat and engage the PTO.

   Note: The PTO should not engage. If it does engage, there is a malfunction in the interlock system that you should correct before resuming operation.
3. Sit on the seat and disengage the PTO.
4. With the engine running, engage the PTO and rise from the seat.

   Note: The PTO drive should disengage after a 1-second delay. If it does not shut off, there is a malfunction in the interlock system that you should correct before resuming operation.
5. Sit on the seat, disengage the PTO, and start the engine.
6. With the engine running, engage the PTO and raise each mower deck individually.

   Note: The blades of the raised mower deck should stop. If the blades do not stop, there is a malfunction in the interlock system that you should correct before resuming operation.

Checking the Blade Stopping Time

Service Interval: Before each use or daily

The blades of the mower deck should come to a complete stop in approximately 5 seconds after you shut down the mower-deck-engagement switch.

Note: Ensure that the decks are lowered onto a clean section of turf or hard surface to avoid thrown dust and debris. To verify the stopping time, have someone stand back from the deck at least 6 m (20 ft) and watch the blades on 1 of the mower decks. Shut the mower decks down and record the time that it takes for the blades to come to a complete stop. If the time is greater than 7 seconds, adjust the braking valve; contact your Toro Distributor for assistance in making this adjustment.

During Operation

During Operation Safety

General Safety

- The owner/operator can prevent and is responsible for accidents that may cause personal injury or property damage.
- Wear appropriate clothing, including eye protection; slip-resistant, substantial foot protection; and hearing protection. Tie back long hair and do not wear jewelry.
- Do not operate the machine while ill, tired, or under the influence of alcohol or drugs.
- Never carry passengers on the machine and keep bystanders and pets away from the machine during operation.
- Operate the machine only in good visibility to avoid holes or hidden hazards.
- Avoid mowing on wet grass. Reduced traction could cause the machine to slide.
- Before you start the engine, ensure that all drives are in neutral, the parking brake is engaged, and you are in the operating position.
- Keep your hands and feet away from the cutting units. Keep clear of the discharge opening at all times.
- Look behind and down before backing up to be sure of a clear path.
- Use care when approaching blind corners, shrubs, trees, or other objects that may obscure your vision.
- Stop the blades whenever you are not mowing.
- Stop the machine and inspect the blades after striking an object or if there is an abnormal vibration in the machine. Make all necessary repairs before resuming operation.
- Slow down and use caution when making turns and crossing roads and sidewalks with the machine. Always yield the right-of-way.
- Disengage the drive to the cutting unit and shut off the engine before adjusting the height of cut (unless you can adjust it from the operating position).
- Never run an engine in an area where exhaust gasses are enclosed.
- Never leave a running machine unattended.
- Before leaving the operating position (including to empty the catchers or to unclog the chute), do the following:
  - Park the machine on level ground.
  - Disengage the power take-off and lower the attachments.
  - Engage the parking brake.
  - Shut off the engine and remove the key.
  - Wait for all moving parts to stop.
- Do not operate the machine when there is the risk of lightning.
- Do not use the machine as a towing vehicle.
- Use accessories, attachments, and replacement parts approved by The Toro® Company only.

Rollover Protection System (ROPS) Safety

- **Do not** remove the ROPS from the machine.
- Ensure that the seat belt is attached and that you can release it quickly in an emergency.
- Check carefully for overhead obstructions and do not contact them.
- Keep the ROPS in safe operating condition by thoroughly inspecting it periodically for damage and keeping all the mounting fasteners tight.
- Replace a damaged ROPS. Do not repair or alter it.

Machines with Cabs

- The ROPS is an integral and effective safety device.
- A cab installed by Toro is a roll bar.
- Always wear your seat belt.

Machines with a Fixed Roll Bar

- The ROPS is an integral safety device.
- Always wear your seat belt.

Slope Safety

- Establish your own procedures and rules for operating on slopes. These procedures must include surveying the site to determine which slopes are safe for machine operation. Always use common sense and good judgment when performing this survey.
- Slopes are a major factor related to loss-of-control and tip-over accidents, which can result in severe injury or death. Operating the machine on any slope requires extra caution.
- Operate the machine at a lower speed when you are on a slope.
- If you feel uneasy operating the machine on a slope, do not do it.

- Watch for holes, ruts, bumps, rocks, or other hidden objects. Uneven terrain could overturn the machine. Tall grass can hide obstacles.
- Choose a low ground speed so you will not have to stop or shift while on a slope.
- A rollover can occur before the tires lose traction.
- Avoid operating the machine on wet grass. Tires may lose traction; regardless if the brakes are available and functioning.
- Avoid starting, stopping, or turning the machine on a slope.
- Keep all movement on slopes slow and gradual. Do not suddenly change the speed or direction of the machine.
- Do not operate the machine near drop-offs, ditches, embankments, or bodies of water. The machine could suddenly roll over if a wheel goes over the edge or the edge caves in. Establish a safety area between the machine and any hazard (2 machine widths).

Starting and Shutting Off the Engine

1. Ensure that the parking brake is engaged.
2. Remove your foot from the traction pedal and ensure that it is in the NEUTRAL position.
3. Turn the ignition key to the RUN position.
4. When the glow indicator dims, turn the ignition key to the START position.
5. Release the key immediately when the engine starts and allow it to return to the RUN position.
6. Allow the engine to warm up at low speed (without load) for 3 to 5 minutes, then actuate the throttle switch to attain the desired engine speed.

   Important: **The starter motor automatically disengages after 30 seconds to prevent premature starter motor failure. If the engine fails to start after 30 seconds, turn the key to the OFF position, check the controls and procedures again, wait 2 minutes, and repeat the starting procedure.**

   Note: When the hydraulic-fluid temperature is below 4°C (40°F), the machine operates in a warm-up mode; limiting the engine speed to 1,650 rpm and preventing traction-drive operation in High range. When the fluid temperature reaches 4°C (40°F), the warm-up mode disables.
7. To shut off the engine, set the throttle switch to the LOW-IDLE position, move the PTO switch to the OFF position, engage the parking brake, and turn the ignition key to OFF.
8. Remove the key from the switch to prevent accidental starting.

Important: **Allow the engine to idle for 5 minutes before shutting it off after a full-load operation. Failure to do so may lead to turbo-charger complications.**

Raising or Lowering the Decks

Raising the Decks

1. While sitting in the operator's seat, start the engine.

   Note: Whenever you are running the machine at **under 2,000 rpm** (e.g., when you are running the engine at idle or transporting the machine into or out of a building), you will not be able

raise all the mowers at once. Instead, you can only raise 1 mower deck at a time.

2. Push the deck-lift switches rearward to raise the decks.

Lowering the Decks

1. While sitting in the operator's seat, turn the ignition key to the RUN position.
2. Using the handle, unhook the latches holding the decks in the raised position (Figure 29).

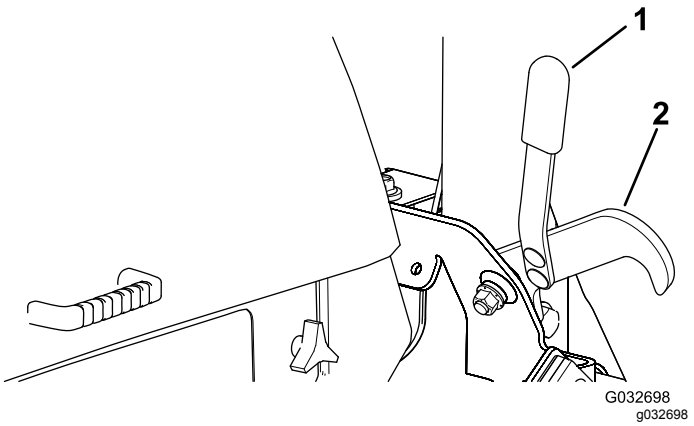

Figure 29

1. Handle
2. Latch

3. Push the deck-lift switches forward to lower the decks.

Cutting Grass with the Machine

Note: Cutting grass at a rate that loads the engine promotes DPF regeneration.

1. Move the machine to the job site.
2. Whenever possible, set the engine-speed switch to high idle.
3. Engage the PTO switch.
4. Gradually move the traction pedal forward and slowly drive the machine over the mowing area.
5. Once the front of the cutting units are over the mowing area, lower the cutting units.
6. Cut grass so that the blades can cut and discharge clippings at a high rate while producing a good quality of cut.

   Note: If the cutting rate is too high, the quality of cut may deteriorate. Reduce the ground speed of the machine or reduce the width of cut to regain high idle engine speed.
7. When the cutting units are over the far edge of the mowing area, lift the cutting units.
8. Perform a tear-shaped turn to quickly line up for your next pass.

Diesel Particulate Filter Regeneration

The diesel particulate filter (DPF) is part of the exhaust system. The diesel-oxidation catalyst of the DPF reduces harmful gasses and the soot filter removes soot from the engine exhaust.

The DPF regeneration process uses heat from the engine exhaust to incinerate the soot accumulated on the soot filter, converting the soot to ash, and clears the channels of the soot filter so that filtered engine exhaust flows out the DPF.

The engine computer monitors the accumulation of soot by measuring the back pressure in the DPF. If the back pressure is too high, soot is not incinerating in the soot filter through normal engine operation. To keep the DPF clear of soot, remember the following:

- Passive regeneration occurs continuously while the engine is running—run the engine at full engine speed when possible to promote DPF regeneration.
- If the back pressure is too high, the engine computer signals you through the InfoCenter when additional processes (assist and reset regeneration) are running.

Operate and maintain your machine with the function of the DPF in mind. Engine load at high idle engine speed generally produce adequate exhaust temperature for DPF regeneration.

Important: **Minimize the amount of time that you idle the engine or operate the engine at low-engine speed to help reduce the accumulation of soot in the soot filter.**

⚠ CAUTION

The exhaust temperature is hot (approximately 600°C (1112°F) during DPF parked regeneration or recovery regeneration. Hot exhaust gas can harm you or other people.

- **Never operate the engine in an enclosed area.**
- **Make sure that there are no flammable materials around the exhaust system.**
- **Never touch a hot exhaust system component.**
- **Never stand near or around the exhaust pipe of the machine.**

DPF Soot Accumulation

- Over time, the DPF accumulates soot in the soot filter. The computer for the engine monitors the soot level in the DPF.
- When enough soot accumulates, the computer informs you that it is time to regenerate the diesel particulate filter.
- DPF regeneration is a process that heats the DPF to convert the soot to ash.
- In addition to the warning messages, the computer reduces the power produced by the engine at different soot-accumulation levels.

Engine Warning Messages—Soot Accumulation

Indication Level	Regeneration Icon	Fault Code	Engine Power Rating	Recommended Action
Level 1: Engine Warning	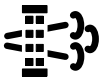 g211812 **Figure 30**	 g214934 **Figure 31** Check Engine	The computer de-rates the engine power to 85%.	Perform a parked regeneration as soon as possible; refer to Parked Regeneration (page 44).
Level 2: Engine Warning	 g211810 **Figure 32**	 g214934 **Figure 33** Check Engine	The computer de-rates the engine power to 50%.	Perform a recovery regeneration as soon as possible; refer to Recovery Regeneration (page 44).

DPF Ash Accumulation

- The lighter ash is discharged through the exhaust system; the heavier ash collects in the soot filter.
- Ash is a residue of the regeneration process. Over time, the diesel particulate filter accumulates ash that does not discharge with the engine exhaust.
- The computer for the engine calculates the amount of ash accumulated in the DPF.
- When enough ash accumulates, the engine computer sends information to the InfoCenter in the form of a system advisory or an engine fault to indicate the accumulation of ash in the DPF.
- The advisory and faults are indications that it is time to service the DPF.
- In addition to the warnings, the computer reduces the power produced by the engine at different ash-accumulation levels.

InfoCenter Active Fault Messages—Ash Accumulation

Indication Level	Active Fault	Engine Speed Reduction	Engine Power Rating	Recommended Action
Level 2: Engine Warning	 g214980 **Figure 34** Check Engine SPN 3720 Too High Severe	None	The computer de-rates the engine power to 85%	Service the DPF; refer to Servicing the Diesel-Oxidation Catalyst (DOC) and the Soot Filter (page 64).
Level 3: Engine Warning	 g214979 **Figure 35** Check Engine SPN 3720	None	The computer de-rates the engine power to 50%	Service the DPF; refer to Servicing the Diesel-Oxidation Catalyst (DOC) and the Soot Filter (page 64).
Level 4: Engine Warning	 g214978 **Figure 36** Check Engine SPN 3251 High	Engine speed at max torque + 200 rpm	The computer de-rates the engine power to 50%	Service the DPF; refer to Servicing the Diesel-Oxidation Catalyst (DOC) and the Soot Filter (page 64).

Regeneration Unavailable Messages

Unavailable Message Table

Message	Condition	Recommended Action
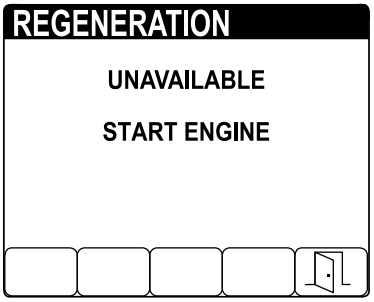 g214114 **Figure 37**	The engine is not running.	Start the engine.
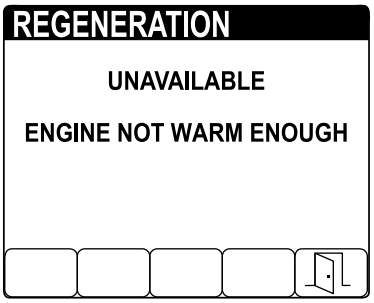 g214111 **Figure 38**	The engine coolant temperature is cooler than 60°C (140°F).	Run the engine until the coolant temperature is hotter than 60°C (140°F).
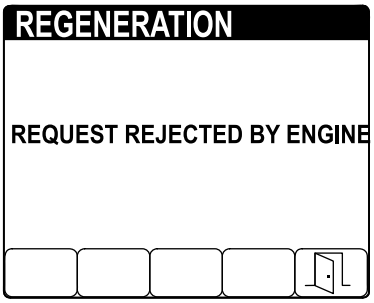 g214488 **Figure 39**	The engine ran less than 50 hours since last regeneration.	Operate the machine until the parked regeneration icon displays in the InfoCenter.
	The exhaust temperature is less than 250°C (482°F)	Run the engine at full throttle or under high load before starting the parked regeneration.
	The engine ran less than 50 hours since last regeneration and the exhaust temperature is less than 250°C (482°F).	Operate the machine until the parked regeneration icon displays in the InfoCenter and run the engine at full throttle or under high load before starting the parked regeneration.
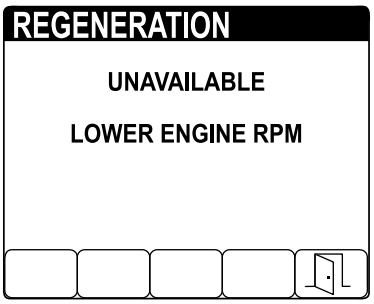 g214137 **Figure 40**	The engine speed is faster that slow idle.	Reduce the engine speed to slow idle.

Unavailable Message Table (cont'd.)

Message	Condition	Recommended Action
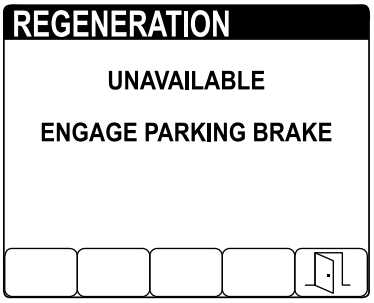 g214110 **Figure 41**	The parking brake is not engaged.	Engage the parking brake.
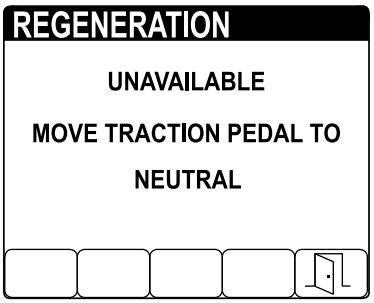 g214113 **Figure 42**	The traction pedal is in the FORWARD or REVERSE position.	Move the traction pedal to the NEUTRAL position.
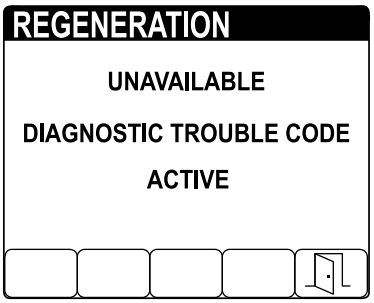 g214109 **Figure 43**	The engine computer has sent a diagnostic trouble code.	Troubleshoot the diagnostic fault code and/or repair the engine.
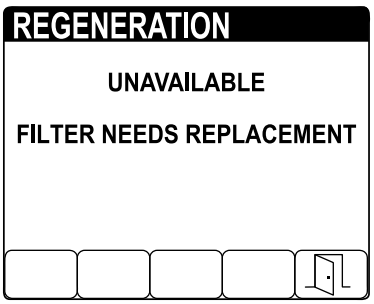 g214112 **Figure 44**	The soot filter needs service.	Refer to Servicing the Diesel-Oxidation Catalyst (DOC) and the Soot Filter (page 64).

Types of Diesel Particulate Filter Regeneration

Types of diesel particulate filter regeneration that are performed while the machine is operating:

Type of Regeneration	Conditions for DPF regeneration	DPF description of operation
Passive	Occurs during normal operation of the machine at high-engine speed or high-engine load	The InfoCenter does not display an icon indicating passive regeneration. During passive regeneration, the DPF processes high-heat exhaust gasses; oxidizing harmful emissions and burning soot to ash. Refer to Passive DPF Regeneration (page 44).
Assist	Occurs as a result of low-engine speed, low-engine load, or after the computer detects back pressure in the DPF	During assist regeneration, the computer controls the intake throttle to increase the exhaust temperature, enabling assist regeneration to occur. Refer to Assist DPF Regeneration (page 44).
Reset	Occurs after assist regeneration only if the computer detects that assist regeneration did not sufficiently reduce the soot level Also occurs every 100 hours to reset baseline sensor readings	During reset regeneration, the computer controls the intake throttle and fuel injectors to increase the exhaust temperature during regeneration. Refer to Reset Regeneration (page 44).

Types of diesel particulate filter regeneration that require you to park the machine:

Type of Regeneration	Conditions for DPF regeneration	DPF description of operation
Parked	Soot buildup occurs as a result of prolonged operation at low-engine speed or low-engine load. May also occur as a result of using incorrect fuel or oil The computer detects back pressure due to soot buildup and requests a parked regeneration	When the parked-regeneration icon 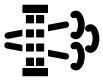 is displayed in the InfoCenter, a regeneration is requested. • Perform the parked regeneration as soon as possible to avoid needing a recovery regeneration. • A parked regeneration requires 30 to 60 minutes to complete. • You must have at least a 1/4 tank of fuel in the tank. • You must park the machine to perform a recovery regeneration. Refer to Parked Regeneration (page 44).
Recovery	Occurs as a result of ignoring parked regeneration requests and continuing operation, adding more soot when the DPF is already in need of a parked regeneration	When the recovery-regeneration icon 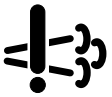 is displayed in the InfoCenter, a recovery regeneration is requested. • A recovery regeneration requires approximately 4 hours to complete. • You must have at least a 1/2 tank of fuel in the machine. • You must park the machine to perform a recovery regeneration. Refer to Recovery Regeneration (page 44).

Passive DPF Regeneration

- Passive regeneration occurs as part of normal engine operation.
- While operating the machine, run the engine at full-engine speed when possible to promote DPF regeneration.

Assist DPF Regeneration

- The computer takes control of the intake throttle to increase the temperature of the engine exhaust.
- While operating the machine, run the engine at full engine speed when possible to promote DPF regeneration.

Reset Regeneration

- The computer takes control of the intake throttle and changes the fuel injection operation to increase the temperature of the engine exhaust.

  Important: **The assist/reset-regeneration icon indicates that the exhaust temperature discharged from of your machine may be hotter than during regular operation.**
- While operating the machine, run the engine at full engine speed when possible to promote DPF regeneration.

Parked Regeneration and Recovery Regeneration

Parked Regeneration

- The parked-regeneration requested icon displays in the InfoCenter (Figure 45).

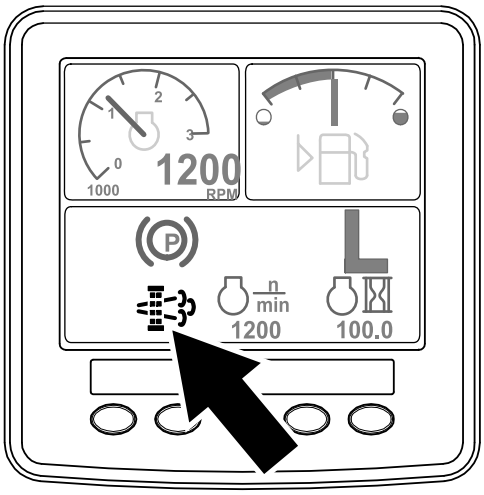

g214646

Figure 45

- If you ignore the request for a parked regeneration (displayed in the InfoCenter) and continue to operate the machine (Figure 46), a critical amount of soot may accumulate in the DPF.

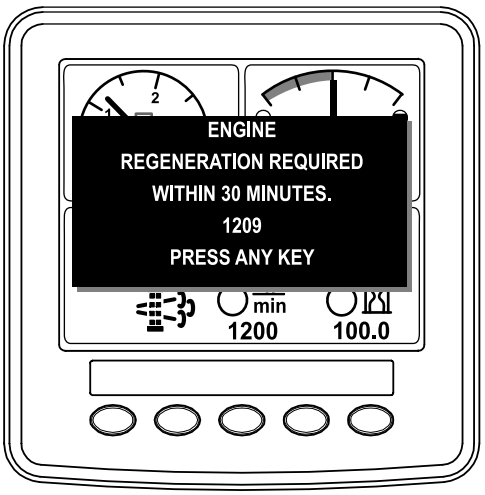

g214645

Figure 46

- If you are authorized by your company, you need the PIN code to perform the parked-regeneration process.

Recovery Regeneration

- The recovery-regeneration icon displays in the InfoCenter (Figure 47).

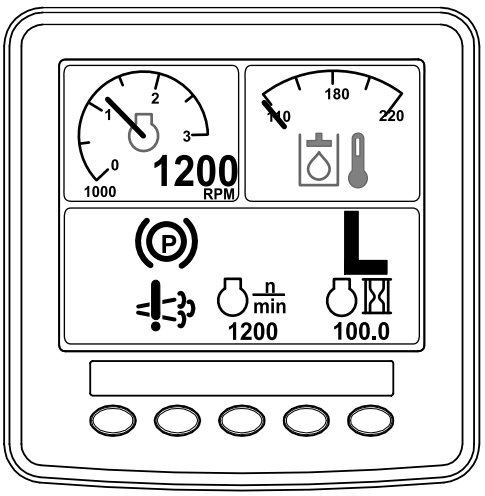

g214648

Figure 47

- If you ignore the request for a parked regeneration (displayed in the InfoCenter) and continue to operate the machine (Figure 48), a critical amount of soot may accumulate in the DPF.

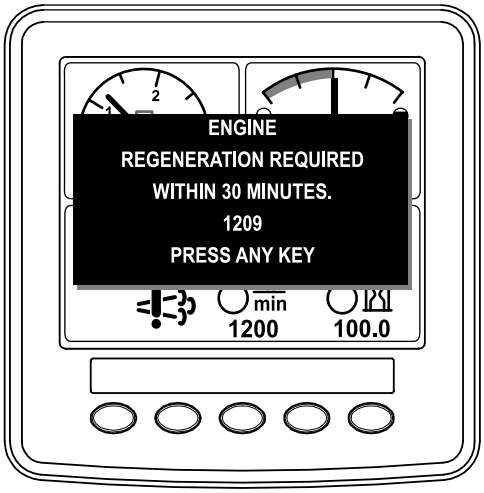

g214647

Figure 48

- If you are authorized by your company, you need the PIN code to perform the recovery-regeneration process.

Preparing to Perform a Parked or Recovery Regeneration

1. Ensure that the machine has fuel in the tank for the type of regeneration you are performing:
   - **Parked Regeneration:** Ensure that you have 1/4 tank of fuel before performing the parked regeneration.
   - **Recovery Regeneration:** Ensure that you have 1/2 tank of fuel before performing the recovery regeneration.
2. Move the machine outside to an area away from combustible materials.
3. Park the machine on a level surface.
4. Ensure that the traction control or motion-control levers are in the NEUTRAL position.
5. If applicable, lower the cutting units and shut them off.
6. Engage the parking brake.
7. Set the throttle to the low IDLE position.

Performing the Regeneration

Note: For instructions on unlocking protected menus, refer to Accessing Protected Menus on the Software Guide for you machine.

1. On the MAIN MENU, press button 1 or button 2 to navigate to the SERVICE option, and press button 4 to select the SERVICE entry (Figure 49).

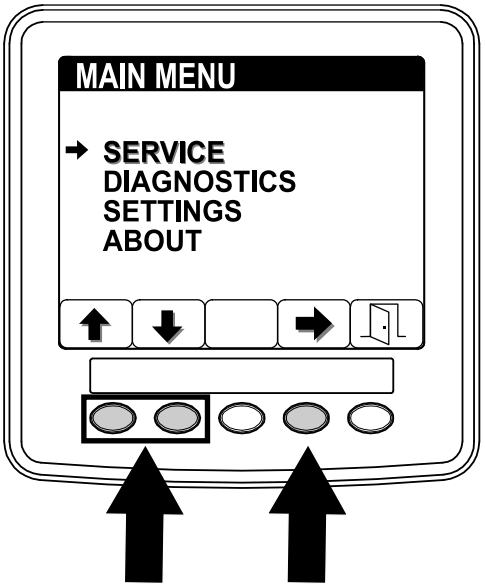

g214884

Figure 49

2. On the SERVICE menu, press button 1 or button 2 to navigate to the REGENERATION option, and press button 4 to select the REGENERATION entry (Figure 50).

   If an UNAVAILABLE MESSAGE displays in the InfoCenter, perform the recommended actions described in the unavailable message table of Regeneration Unavailable Messages (page 41).

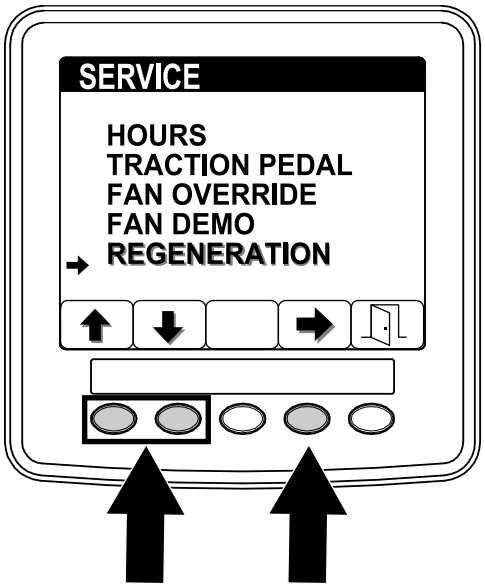

g214887

Figure 50

3. On the regeneration screen, press button 4 to start the regeneration process (Figure 51).

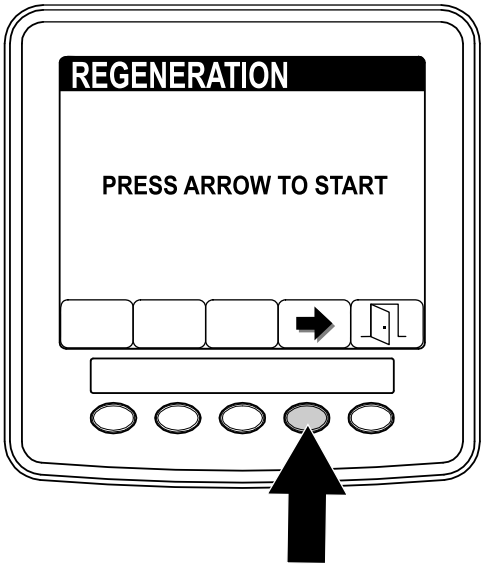

g214486

Figure 51

4. The InfoCenter displays a series of screens (Figure 52) as the regeneration processes:

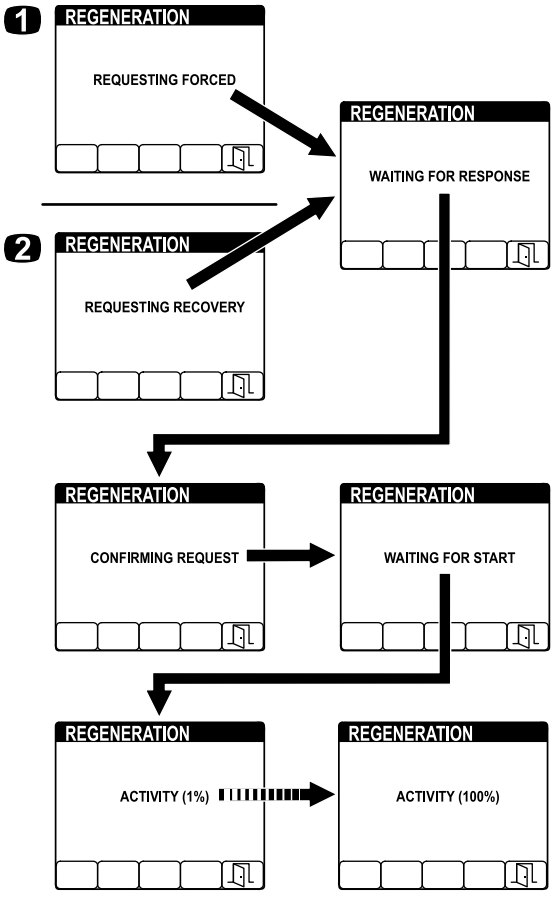

g214903

Figure 52

1. REQUESTING FORCED is displayed during a parked regeneration
2. REQUESTING RECOVERY is displayed during a recovery regeneration

Note: If you press button 5 while the regeneration is processing, you will exit the regeneration process. At the EXIT screen press button 5 to return to the SERVICE menu (Figure 53).

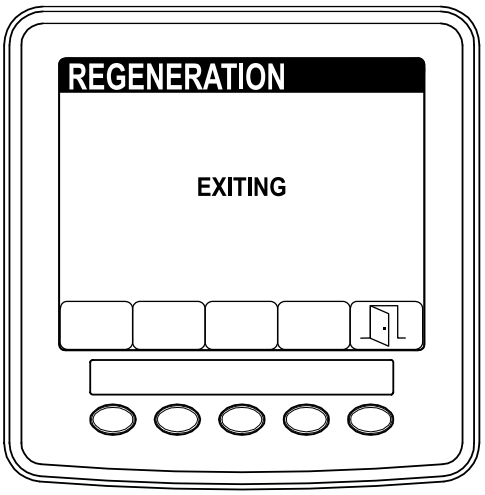

g214485

Figure 53

5. When regeneration completes, the COMPLETE screen displays in the InfoCenter. Press button 5 to return to the SERVICE menu (Figure 54).

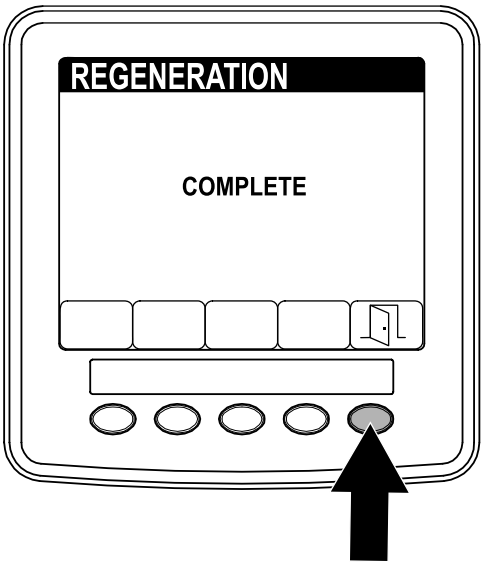

g214483

Figure 54

Understanding the Operating Characteristics of the Machine

Practice driving the machine, as it has a hydrostatic transmission, and its characteristics may differ from other turf-maintenance machines.

With Toro Smart Power™, you do not have to listen to the engine speed in heavy load conditions. Smart Power prevents the engine from bogging down in heavy cutting conditions by automatically controlling the machine speed and optimizing cutting performance.

If Toro Smart Power™ is disabled, to maintain enough power for the traction unit and implement while operating, regulate the traction pedal to keep the engine speed (rpm) high and constant. Decrease the ground speed as the load on the implement increases, and increase the ground speed as the load decreases.

Allow the traction pedal to move backward as the engine speed (rpm) decreases, and press the pedal slowly as the engine speed increases. By comparison, when driving between work areas, with no load and the mower deck raised, set the throttle in the highest position and press the traction pedal slowly, but fully, to attain maximum ground speed.

Before stopping the engine, disengage all controls and decrease the engine speed to LOW IDLE (1,000 rpm). Turn the ignition key to the OFF position to shut off the engine.

Before transporting the machine, raise the mower decks and secure the transport latches on the wing mower deck (Figure 55).

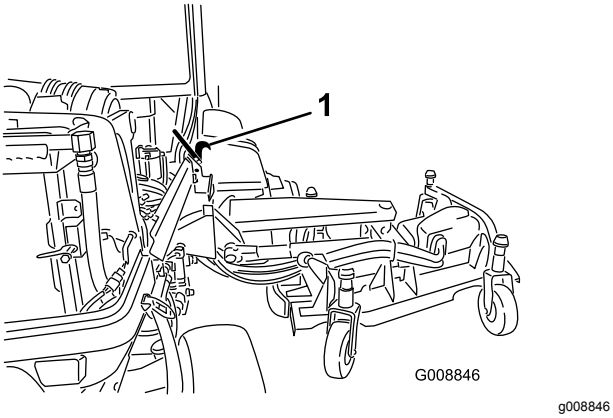

g008846

Figure 55

1. Transport latch

Understanding the 12 V and 24 V Electrical Systems

This machine is designed with 2 voltage systems: 12 V and 24 V.

The 12 V system powers all functions of the machine, except for the engine-cooling fans and hydraulic-cooling fans. The 2 large 12 V batteries at the rear, right corner of the machine are connected in parallel to provide 12 V nominal. The 12 V engine alternator charges these batteries.

The 24 V system powers the engine-cooling fans and hydraulic-cooling fans. The 2 small 12 V batteries at the rear, left corner of the machine are connected in series to provide 24 V nominal. The 24 V alternator charges these batteries.

The battery-disconnect switch is located at the rear, right side of the machine. This switch can be used to disconnect power from the batteries during service or maintenance procedures.

Automatic-Reversing Fan Cycle

The hydraulic-fan speed is controlled by hydraulic-fluid temperature. The radiator-fan speed is controlled by the engine-coolant temperature. A reverse cycle automatically initiates when either the engine coolant or hydraulic-fluid temperature reaches a certain point. This reversal blows debris off the screens, lowering the engine and hydraulic-fluid temperatures (Figure 56). Additionally, the radiator fans perform a reverse cycle every 21 minutes regardless of the coolant temperature.

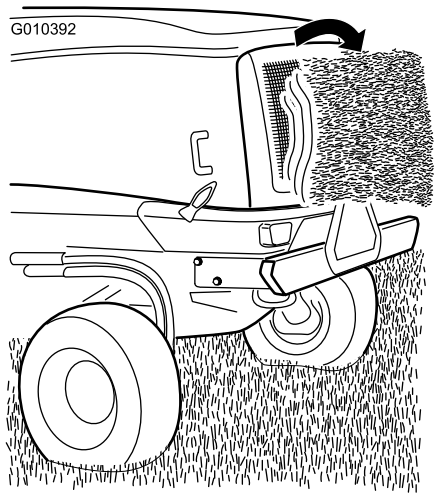

g010392

Figure 56

Operating Tips

Selecting the Proper Height-of-Cut Setting

Remove approximately 25 mm (1 inch) or no more than a third of the grass blade when mowing. In exceptionally lush and dense grass, you may need to raise the height-of-cut to the next setting (Figure 57).

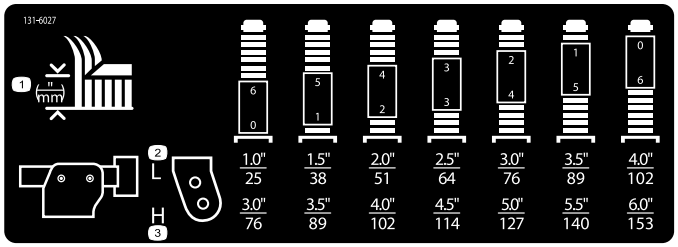

g031395

g031395

Figure 57

Mowing When Grass Is Dry

Mow either in the late morning to avoid the dew, which causes grass clumping, or in late afternoon to avoid the damage that direct sunlight can do to sensitive, freshly-mowed grass.

Mowing at the Proper Intervals

Under most normal conditions, you will need to mow approximately every 4 to 5 days. But, grass grows at different rates at different times. So, to maintain the same height of cut (which is a good practice), you will need to cut more frequently in the early spring; as the grass growth rate slows in mid summer, cut only every 8 to 10 days. If you are unable to mow for an extended period due to weather conditions or other reasons, mow first with a high height of cut; then mow again 2 to 3 days later with a lower height setting.

Adjusting the Mower-Deck Pitch

Mower-deck pitch is the difference in height-of-cut from the front of the blade plane to the back of the blade plane. Use a blade pitch of 7.6 mm (0.3 inch). A pitch larger than 7.6 mm (0.3 inch) results in less power required, larger clippings, and a poorer quality of cut. A pitch less than 7.6 mm (0.3 inch) results in more power required, smaller clippings, and a better quality of cut.

Maximizing the Air Conditioner Performance

- To limit solar heating, park the machine in a shaded area or leave the doors open in direct sun.
- Ensure that the air-conditioning screen is clean.
- Ensure that the air-conditioning-condenser fins are clean.
- Operate the air-conditioner blower at the mid-speed setting.
- Ensure that there is a continuous seal between the roof and the headliner and correct it as needed.
- Measure the air temperature at the front, center vent in the headliner. This should typically stabilize at less than or equal to 10°C (50°F).
- Refer to the Service Manual for additional information.

After Operation

After Operation Safety

- Clean grass and debris from the cutting units, mufflers, and engine compartment to help prevent fires. Clean up oil or fuel spills.
- If the cutting units are in the transport position, use the positive mechanical lock (if available) before you leave the machine unattended.
- Allow the engine to cool before storing the machine in any enclosure.
- Shut off the fuel before storing or transporting the machine.
- Never store the machine or fuel container where there is an open flame, spark, or pilot light, such as on a water heater or on other appliances.
- Keep all parts of the machine in good working condition and all hardware tightened, especially blade-attachment hardware.
- Replace all worn or damaged decals.

Pushing or Towing the Machine

Important: **Do not push or tow the machine faster than 3 to 4.8 km/h (2 to 3 mph), because internal-transmission damage may occur.**

1. Raise the hood and locate the bypass valves on the pump

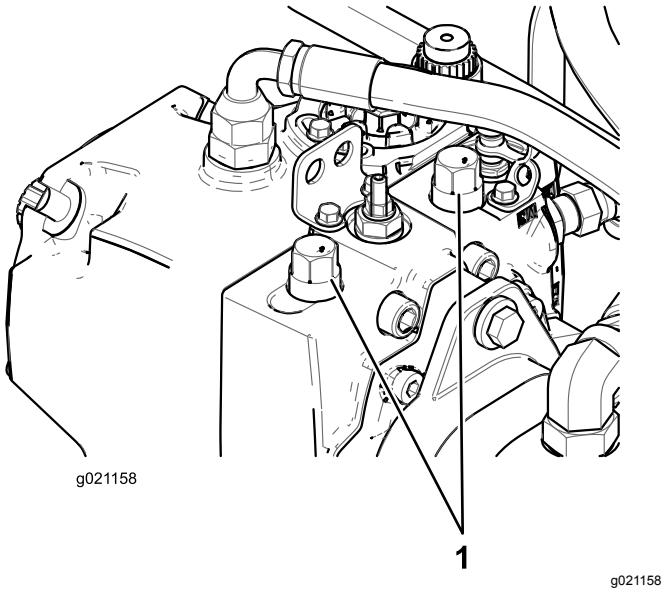

Figure 58

1. Bypass valves (2)

2. Loosen both tow valves on the hydrostatic transmission.
3. Rotate each valve 3 turns counter-clockwise to open and allow oil to bypass internally.
4. Manually release the automatic parking brake using the bypass valve and plunger as shown in Figure 59.

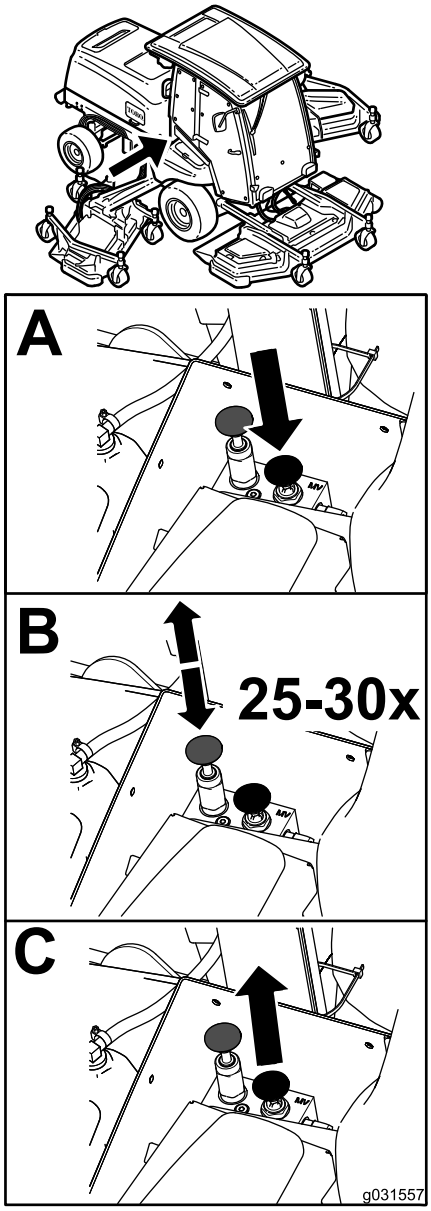

g031557

Figure 59

5. Close the bypass valves before starting the engine and torque to 70 N·m (52 ft-lb) to close the valve.

   Note: The manual parking-brake release automatically resets when the engine is started.

Identifying the Tie-Down Points

Front of the machine—under the front of the operator's platform (Figure 60)

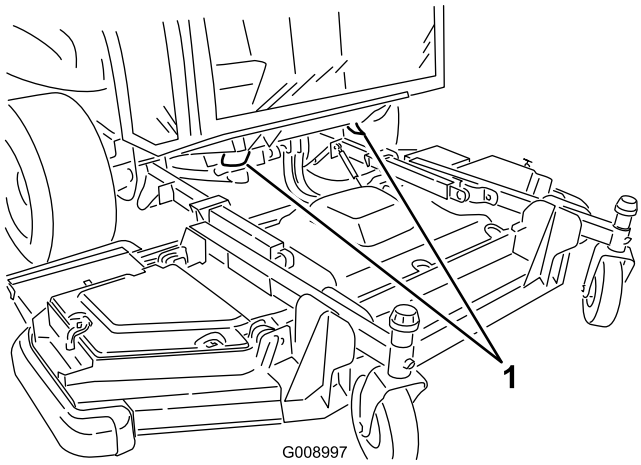

g008997

Figure 60

1. Front tie downs

Rear of the machine—on the bumper (Figure 61)

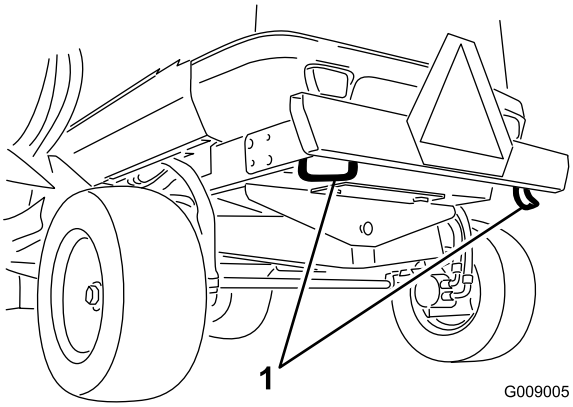

g009005

Figure 61

1. Rear tie downs

Hauling the Machine

- Use care when loading or unloading the machine into a trailer or a truck.
- Use full-width ramps for loading the machine into a trailer or a truck.
- Tie the machine down securely.

Maintenance

Note: Determine the left and right sides of the machine from the normal operating position.

Important: **Refer to your engine operator's manual for additional maintenance procedures.**

Recommended Maintenance Schedule(s)

Maintenance Service Interval	Maintenance Procedure
After the first 10 hours	• Check the wheel-lug nuts. • Check the 12 V alternator belt. • Check the 24 V alternator belt and AC compressor belt. • Check the blade-bolt torque.
After the first 50 hours	• Change the engine oil and engine-oil filter.
Before each use or daily	• Check the tire pressure. • Check the blade stopping time. • Check the engine-oil level. • Drain the water separator. • Check the engine-coolant level in the overflow reservoir. • Remove debris from the hydraulic-fluid-cooler core and the radiator core with compressed air. • Check the hydraulic-fluid level. • Check the condition of the mower blade. • Check the safety-interlock system.
Every 50 hours	• Lubricate all grease fittings. • Remove the air-cleaner cover and clean out the debris. Do not remove the filter. • Check the condition of the batteries. • Inspect the blade-drive belts. • Check the blade-bolt torque. • Remove all debris and chaff from the engine compartment, radiator, and oil cooler.
Every 100 hours	• Inspect the cooling-system hoses.
Every 250 hours	• Check the wheel-lug nuts. • Clean the cab air filters; replace them if they are torn or excessively dirty. • Clean the air-conditioning-condenser coil. Clean it more frequently in extremely dusty or dirty conditions.
Every 400 hours	• Check the air-cleaner body for damage which could cause an air leak. Replace if damaged. • Check the whole air-intake system for leaks, damage, or loose hose clamps. • Replace the fuel/water separator element.
Every 500 hours	• Change the engine oil and engine-oil filter. • Inspect the fuel lines and connections. • Replace the fuel-filter element. • Inspect the mower deck caster-wheel assemblies.
Every 800 hours	• Drain and clean the fuel tank.
Every 1,000 hours	• Adjust the engine-valve clearance (if necessary). • Calibrate the traction pedal. • Check the rear wheel toe-in. • Flush the engine-cooling system and replace the fluid. • Check the 12 V alternator-belt tension. • Check the 24 V alternator belt and AC compressor-belt tension. • Replace the blade-drive belts. • Change the hydraulic fluid and the 2 hydraulic filters.
Every 1,500 hours	• Clean the engine EGR cooler. • Inspect the engine crankcase-breather system.

Maintenance Service Interval	Maintenance Procedure
Every 2,000 hours	• Check and replace (if necessary) fuel hoses and engine-coolant hoses. • Lap or adjust the engine intake and exhaust valves (if necessary).
Every 3,000 hours	• Inspect and clean (if necessary) the engine-emission-control components and turbocharger.
Every 6,000 hours	• Disassemble, clean, and assemble the soot filter of the DPF. or clean the soot filter if active faults SPN 3251 HIGH, SPN 3720 TOO HIGH SEVERE, or SPN 3720 HIGH display in the InfoCenter.
Every 2 years	• Replace moving hydraulic lines and hoses.

Daily Maintenance Checklist

Duplicate this page for routine use.

	For the week of:						
Maintenance Check Item	**Monday**	**Tuesday**	**Wednesday**	**Thursday**	**Friday**	**Saturday**	**Sunday**
Check the safety-interlock operation.							
Check the brake operation.							
Check the engine-oil level.							
Check the cooling-system-fluid level.							
Drain the water/fuel separator.							
Check the air filter, dust cup, and burp valve.							
Check for unusual engine noises.[2]							
Check the radiator and hydraulic-oil-cooler screens for debris and blow out with compressed air.							
Check for unusual operating noises.							
Check the hydraulic-system-fluid level.							
Check the hydraulic hoses for damage.							
Check for fluid leaks.							
Check the fuel level.							
Check the tire and caster pressure.							
Check the instrument operation.							
Check the height-of-cut adjustment.							
Lubricate all of the grease fittings.[2]							

Maintenance Check Item	For the week of:						
	Monday	Tuesday	Wednesday	Thursday	Friday	Saturday	Sunday
Touch up any damaged paint.							

[1]Check the glow plug, injector nozzles and engine air filters if starting is hard, there is excess smoke, or rough running is noted.

[2]Immediately **after every** washing, regardless of the interval listed.

Notation for Areas of Concern

Inspection performed by:		
Item	**Date**	**Information**

Service-Interval Chart

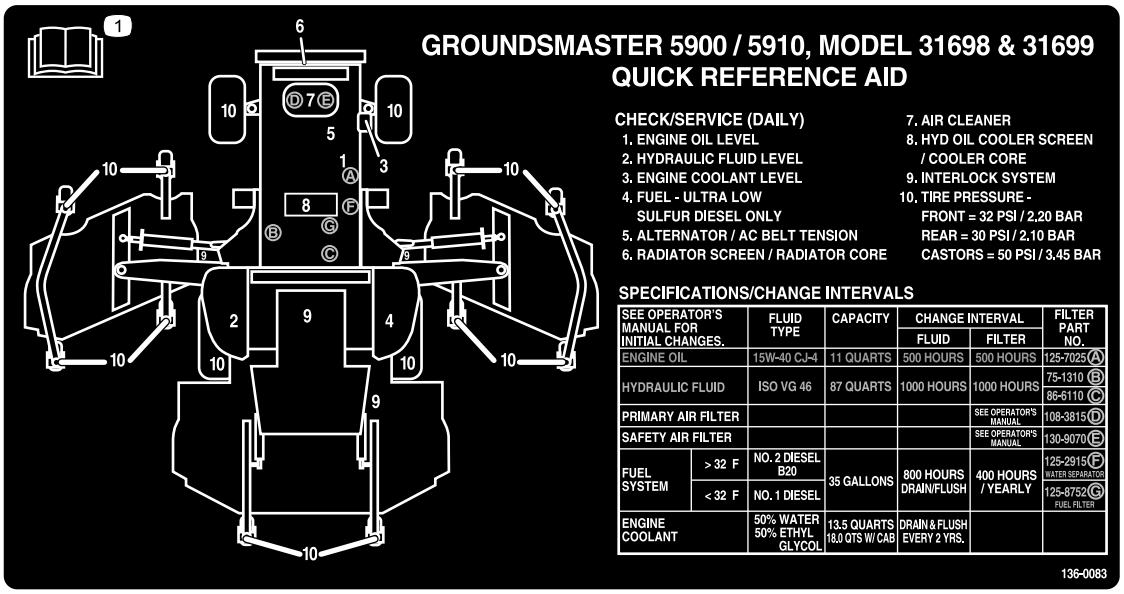

decal136-0083

Figure 62

Pre-Maintenance Procedures

Pre-Maintenance Safety

- Before adjusting, cleaning, repairing, or leaving the machine, do the following:
  - Park the machine on a level surface.
  - Move the throttle switch to the low-idle position.
  - Disengage the cutting units.
  - Lower the cutting units.
  - Ensure that the traction is in neutral.
  - Engage the parking brake.
  - Shut off the engine and remove the key.
  - Wait for all moving parts to stop.
  - Allow machine components to cool before performing maintenance.
- If the cutting units are in the transport position, use the positive mechanical lock (if available) before you leave the machine unattended.
- If possible, do not perform maintenance while the engine is running. Keep away from moving parts.
- Use jack stands to support the machine or components when required.
- Carefully release pressure from components with stored energy.

Using the Battery-Disconnect Switch

Open the hood to access the battery-disconnect switch.

Turn the battery-disconnect switch to the ON or OFF position to perform the following:

- To energize the machine electrically, rotate the battery-disconnect switch clockwise to the ON position (Figure 63).
- To de-energize the machine electrically, rotate the battery-disconnect switch counterclockwise to the OFF position (Figure 63).

Important: **Do not turn the battery-disconnect switch to the OFF position while the engine is running. Ensure that the machine is shut off before turning the battery-disconnect switch to the OFF position, as you may cause damage to the engine and/or machine.**

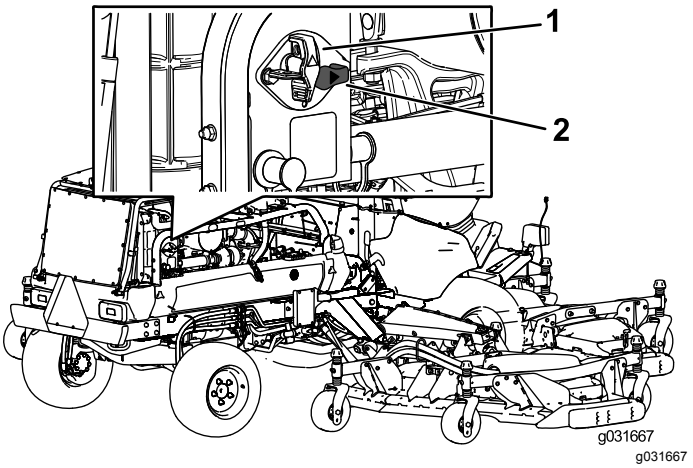

Figure 63

1. Battery-disconnect switch (OFF position)
2. Battery-disconnect switch (ON position)

Raising the Machine

Use the following as points to jack up the machine:

Front of the machine—on the frame, on the inside of each drive tire (Figure 64)

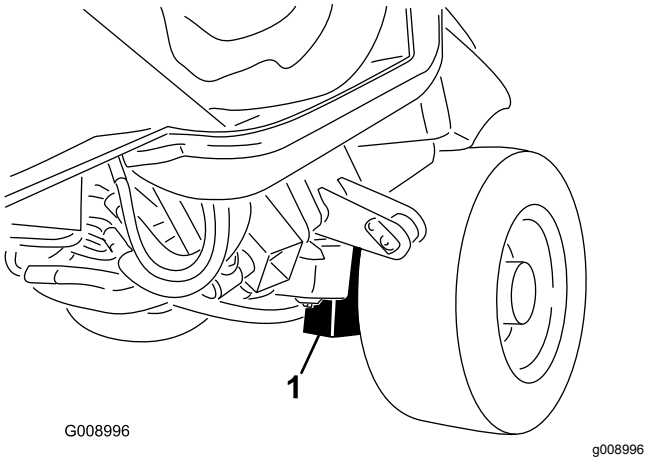

Figure 64

1. Front jacking point (2)

Rear of the machine—at the center of the axle (Figure 65)

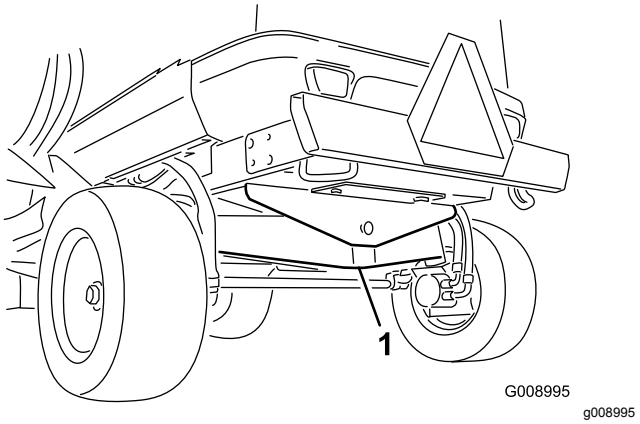

Figure 65

1. Rear jacking point

Removing and Installing the Inner-Wing-Deck Covers

Removing the Inner-Wing-Deck Covers

1. Lower the wing deck onto a level surface.
2. Disengage the cover latch.
3. Remove the bolt securing the belt cover (if equipped).
4. Lift the rear and inside cover edges off the mounting posts (Figure 66).

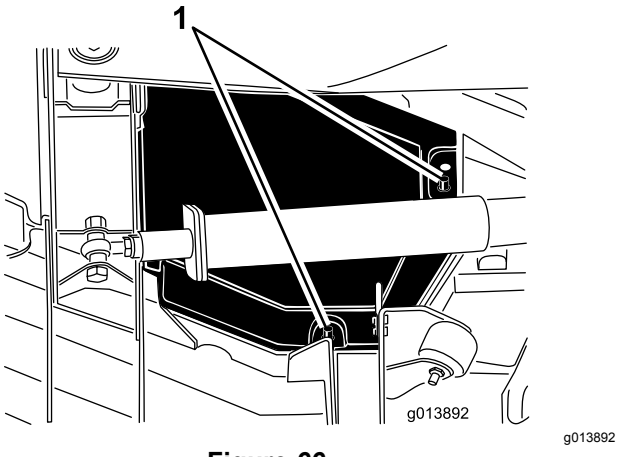

Figure 66

1. Mounting posts

5. While lifting the cover, slide it toward the traction unit approximately 2.5 cm (1 inch), to disengage the outer cover edge from the deck (Figure 67).

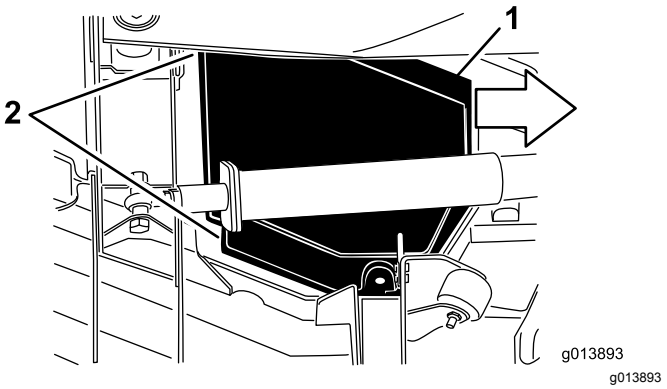

Figure 67

1. Slide the cover inward approximately 2.5 cm (1 inch).
2. Disengage these cover edges.

6. Lift the front edge and guide it between the lift arm and the roller to remove it (Figure 68).

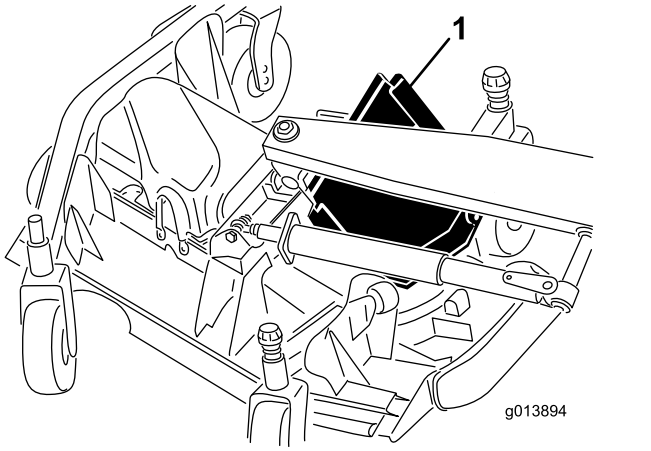

g013894

Figure 68

1. Slide the cover out between the lift arm and roller.

Installing the Inner-Wing-Deck Covers

1. Lower the wing deck onto a level surface.
2. Slide the cover into position by guiding the rear edge between the lift arm and the roller.
3. While sliding the cover away from the traction unit, guide the outside edge under the front and rear brackets on the deck.
4. Align the deck mounting posts with the holes in the cover and lower the cover into position.
5. Install the bolt securing the belt cover (if equipped).
6. Engage the deck-cover latch.

Lubrication

Greasing the Bearings and Bushings

Service Interval: Every 50 hours—Lubricate all grease fittings.

The machine has grease fittings that you must lubricate regularly with No. 2 lithium grease. Also, lubricate the machine immediately after every washing.

Traction Unit

- 2 impact arms (Figure 69)
- 2 front deck-lift-cylinder pivots (Figure 69)
- 2 side deck-lift-cylinder pivots (Figure 69)
- 4 steering-cylinder-ball joints (Figure 70)
- 2 tie-rod-ball joints (Figure 70)
- 2 king-pin bushings (Figure 70)
- 1 rear axle-pivot bushing (Figure 71)

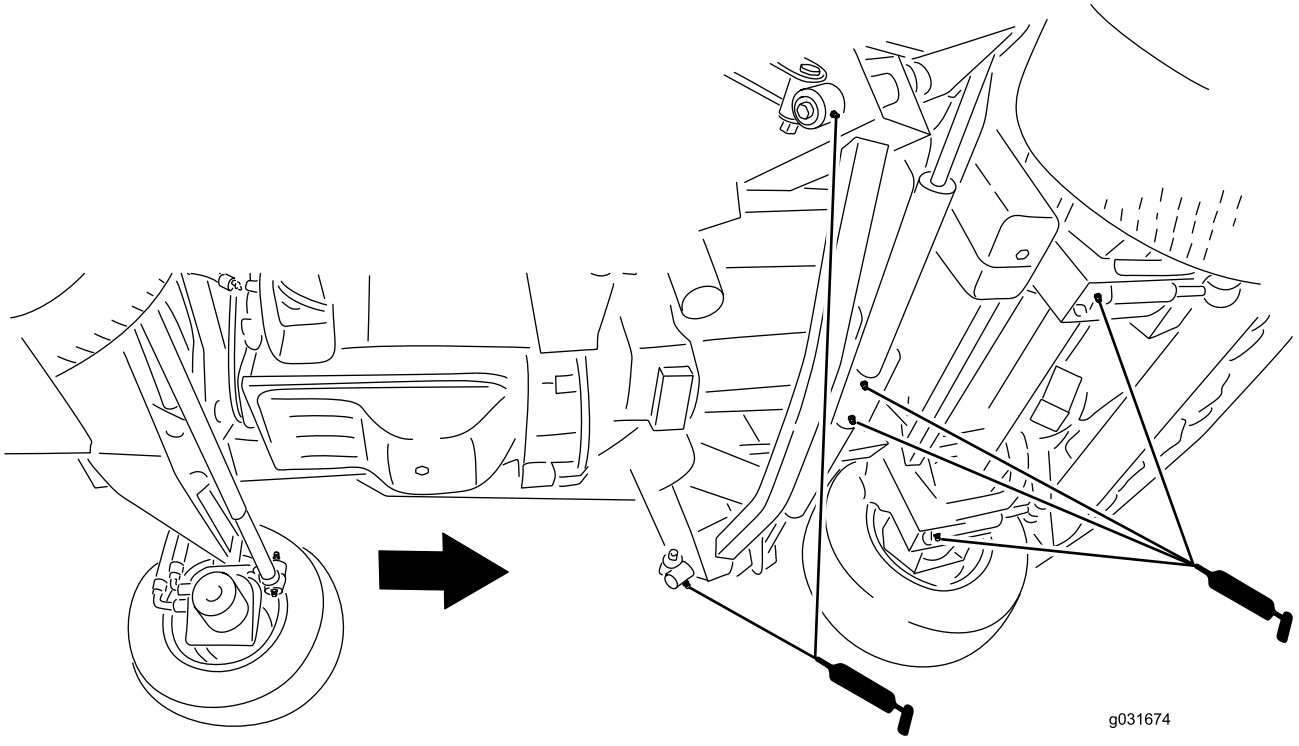

g031674

Figure 69

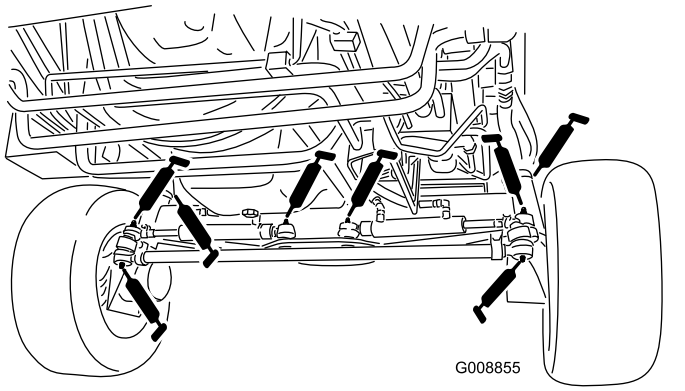

g008855

Figure 70

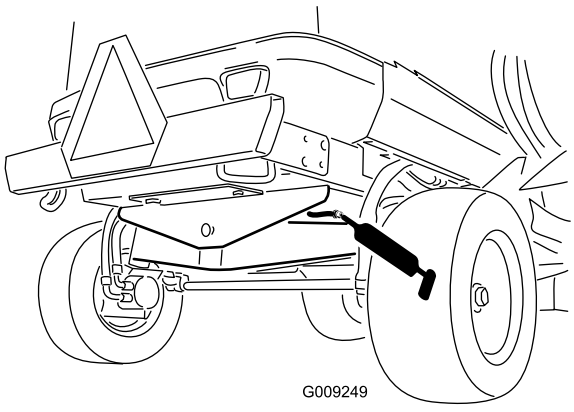

g009249

Figure 71

Front Mower Deck

- 2 caster-fork-shaft bushings (Figure 72)
- 5 spindle-shaft bearings (located on the spindle housing) as shown in Figure 72
- 3 idler-arm-pivot bushings (located on the idler-pivot shaft) as shown in Figure 72
- 4 winglet-deck bushings (located on the winglet-pivot pins) as shown in Figure 72

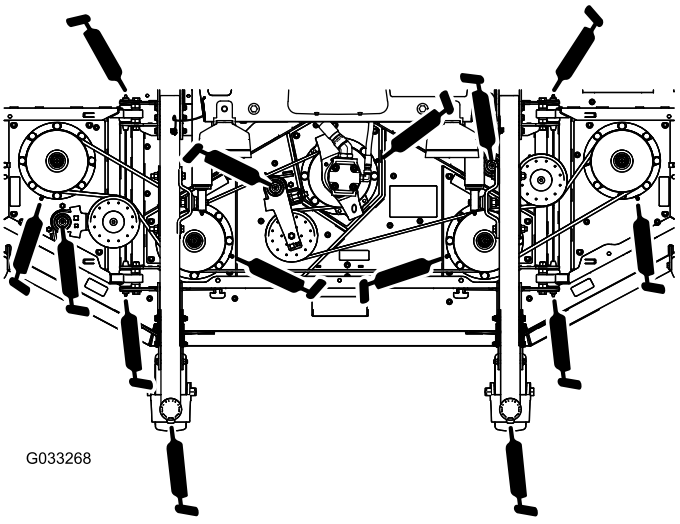

g033268

Figure 72

Front Lift Assemblies

- 2 lift-arm bushings (Figure 73)
- 2 lift-arm-ball joints (Figure 73)
- 2 front deck lift-cylinder pivots (Figure 73)

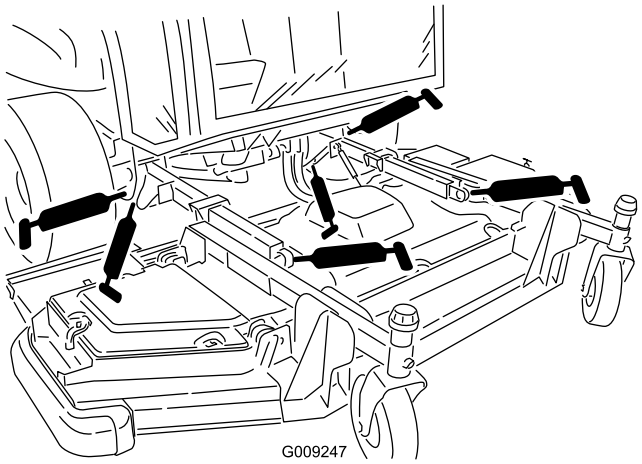

Figure 73

Wing Mower Decks (Each Wing)

- 4 caster-fork-shaft bushing (Figure 74)
- 3 spindle-shaft bearings (located on the spindle housing) as shown in Figure 74
- 2 idler-arm-pivot bushings (located on the idler-pivot shaft) as shown in Figure 74

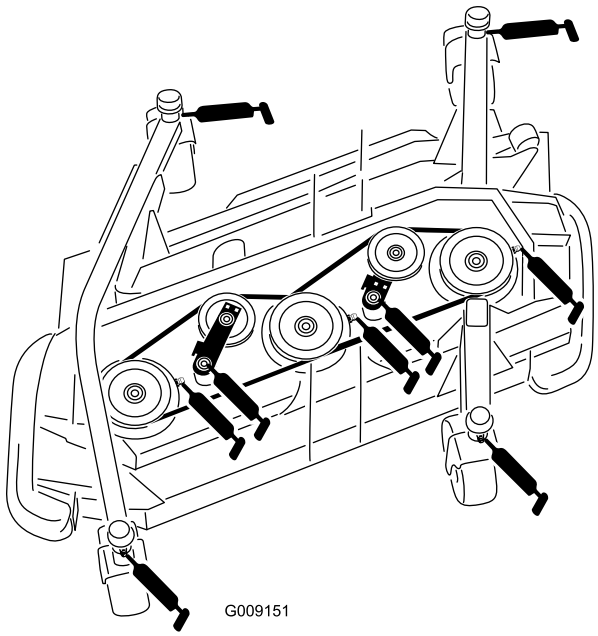

Figure 74

Wing Lift Assemblies (Per Wing)

- 3 main lift-arm bushings (Figure 75)
- 1 lift-cylinder bushing (Figure 75)

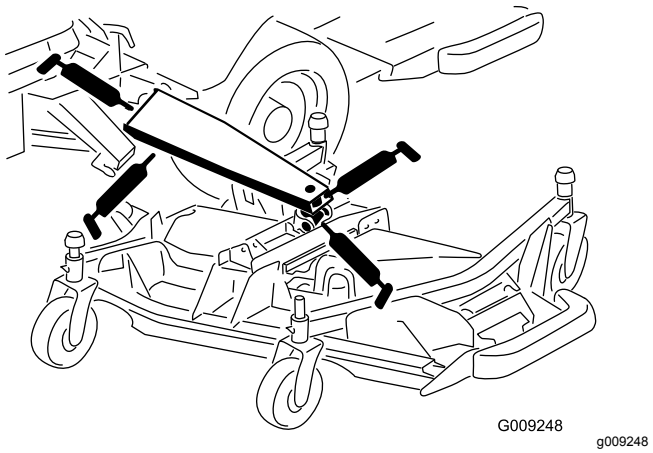

Figure 75

Engine Maintenance

Important: **Do not directly contact the engine-control unit (ECU) or electrical connectors with water, as this may cause damage; refer to Figure 76 for the ECU and electrical connections location.**

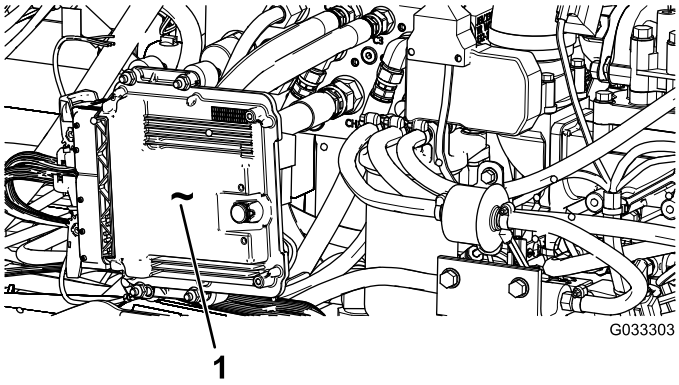

g033303

Figure 76

Located on the left side of the machine under the hood

1. Engine-control unit (ECU)

Engine Safety

- Shut off the engine before checking the oil or adding oil to the crankcase.
- Do not change the governor speed or overspeed the engine.

Servicing the Air Cleaner

Check the air-cleaner body for damage that could cause an air leak and replace it if it is damaged. Check the entire intake system for leaks, damage, or loose hose clamps. Also, inspect the rubber intake-hose connections at the air cleaner and turbocharger to ensure that the connections are complete.

Service the air-cleaner filter only when the “Check Air Filter” message is displayed on the InfoCenter (Figure 77). Changing the air filter before it is necessary only increases the chance of dirt entering the engine when you remove the filter.

Ensure that the cover is seated correctly and seals with the air-cleaner body.



g021157

Figure 77

Servicing the Air-Cleaner Cover

Service Interval: Every 50 hours—Remove the air-cleaner cover and clean out the debris. Do not remove the filter.

Check the air-cleaner body for damage which could cause an air leak. Replace a damaged air cleaner body.

Clean the air-cleaner cover (Figure 78).

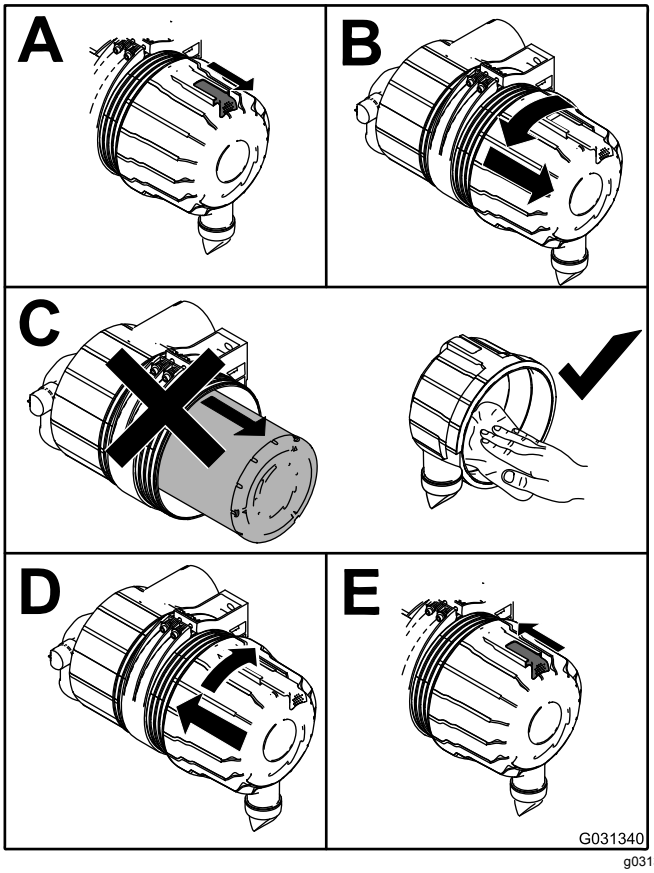

g031340

Figure 78

Servicing the Air-Cleaner Filter elements

Service Interval: Every 400 hours

Every 400 hours

The air-intake system on this machine is continuously monitored by an air-restriction sensor that will display an advisory when the air filter needs to be replaced. Do not replace the elements until this occurs.

Important: **Replace the secondary filter element only every 3 primary filter services. Do not remove the secondary element when cleaning or replacing the primary element. The inner element prevents dust from entering the engine when you service the primary element.**

Important: **Do not operate the engine without the air-cleaner elements as this would allow foreign material to enter the engine and damage it.**

1. Release the latches securing the air-cleaner cover to the air-cleaner body (Figure 79).

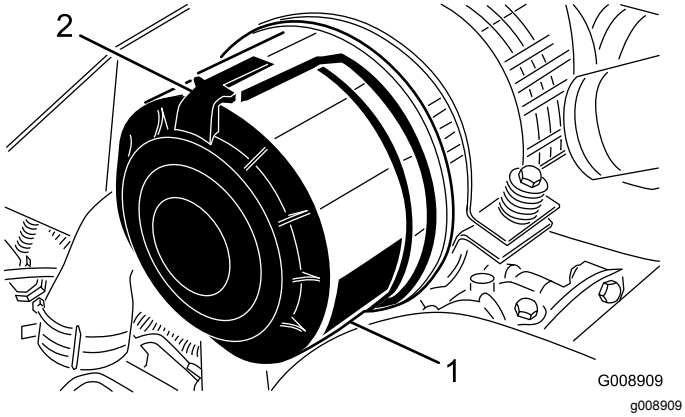

Figure 79

1. Air-cleaner cover
2. Air-cleaner latch

2. Remove the cover from the air-cleaner body.
3. Before removing the filter, use low-pressure air (275 kPa or 40 psi, clean and dry) to help remove large accumulations of debris packed between the outside of the primary filter and the canister.

   Note: Avoid using high-pressure air that could force dirt through the filter into the intake. This cleaning process prevents debris from migrating into the intake when the primary filter is removed.
4. Remove the primary filter (Figure 80).

   Note: Do not clean the used element due to the possibility of damage to the filter media.

   Note: Replace the secondary filter every 3 primary filter services (Figure 81).

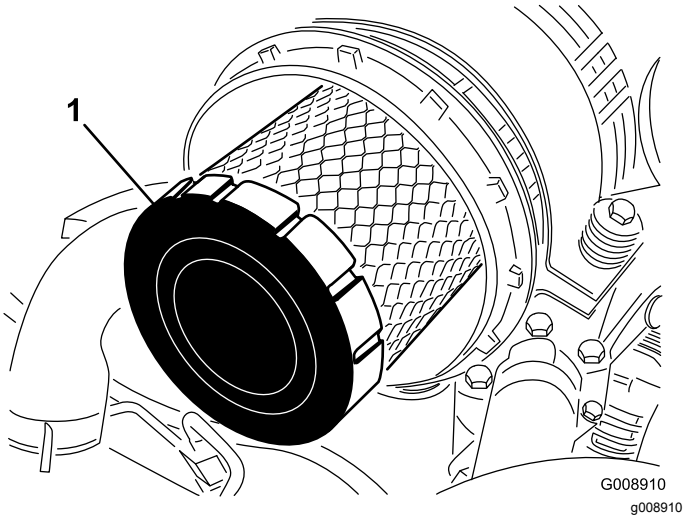

Figure 80

1. Primary filter

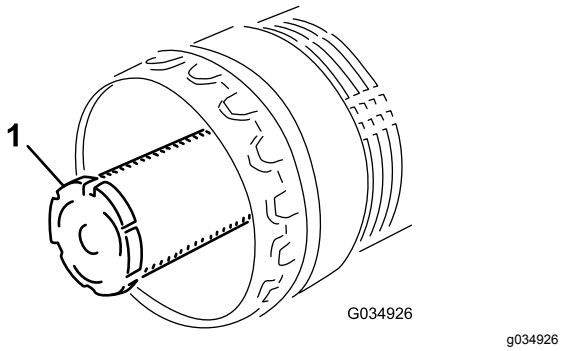

Figure 81

1. Secondary filter

5. Inspect the new filter for shipping damage, checking the sealing end of the filter and the body.

   Important: **Do not use a damaged element.**
6. Insert the new filter by applying pressure to the outer rim of the element to seat it in the canister.

   Important: **Do not apply pressure to the flexible center of the filter, as this may damage the filter.**
7. Clean the dirt-ejection port located in the removable cover.
8. Remove the rubber outlet valve from the cover, clean the cavity, and replace the outlet valve.
9. Install the cover orienting the rubber outlet valve in a downward position—approximately between the 5 o'clock and 7 o'clock position when viewed from the end.
10. Secure the cover latches.

Servicing the Engine Oil

Oil Specification

Use high-quality, low-ash engine oil that meets or exceeds the following specifications:

- API service category CJ-4 or higher
- ACEA service category E6
- JASO service category DH-2

Important: **Using engine oil other than API CJ-4 or higher, ACEA E6, or JASO DH-2 may cause the diesel particulate filter to plug or cause engine damage.**

Use the following engine oil viscosity grade:

- Preferred oil: SAE 15W-40 (above 0°F)
- Alternate oil: SAE 10W-30 or 5W-30 (all temperatures)

Toro Premium Engine Oil is available from your Authorized Toro Distributor in either 15W-40 or 10W-30 viscosity grades. See the parts catalog for part numbers.

Checking the Engine-Oil Level

Service Interval: Before each use or daily—Check the engine-oil level.

The engine is shipped with oil in the crankcase; however, the oil level must be checked before and after the engine is first started.

Important: **Check the engine oil daily. If the engine-oil level is above the Full mark on the dipstick, the engine oil may be diluted with fuel; If the engine oil level is above the Full mark, change the engine oil.**

The best time to check the engine oil is when the engine is cool before it has been started for the day. If it has already been run, allow the oil to drain back down to the sump for at least 10 minutes before checking. If the oil level is at or below the Add mark on the dipstick, add oil to bring the oil level to the Full mark. **Do not overfill the engine with oil**.

Important: **Keep the engine oil level between the upper and lower limits on the dipstick; the engine may fail if you run it with too much or too little oil.**

Check the engine-oil level as shown in Figure 82.

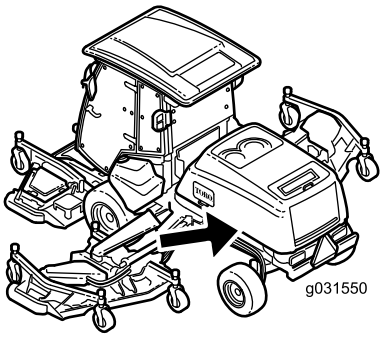

g031550

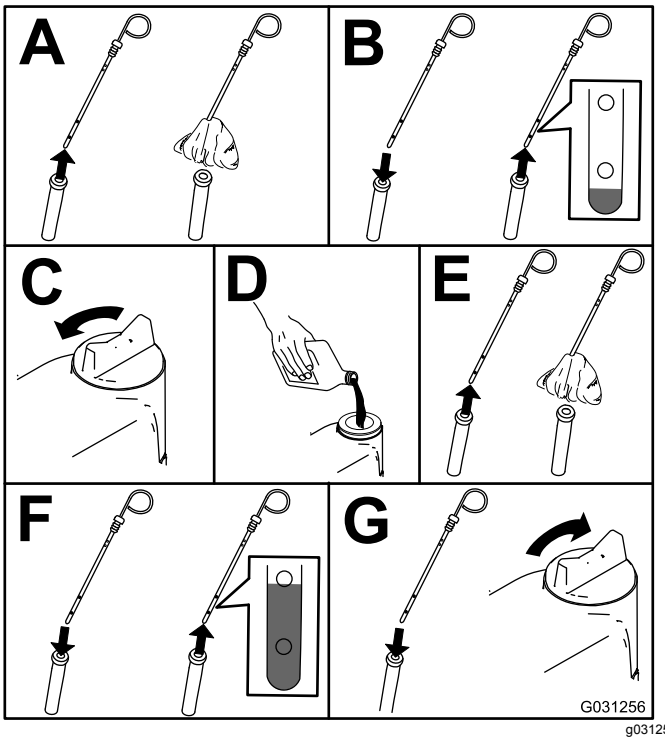

g031256

Figure 82

Crankcase Oil Capacity

10.4 L (11 US qt) with the filter

Changing the Engine Oil and Engine-Oil Filter

Service Interval: After the first 50 hours—Change the engine oil and engine-oil filter.

Every 500 hours—Change the engine oil and engine-oil filter.

Note: Change the engine oil and filter more frequently when the operating conditions are extremely dusty or sandy.

1. Start the engine and let it run 5 minutes to allow the oil to warm up.
2. Park the machine on a level surface, engage the parking brake, lower the cutting deck, shut off the engine, and remove the key.
3. Change the engine oil as shown in Figure 83.

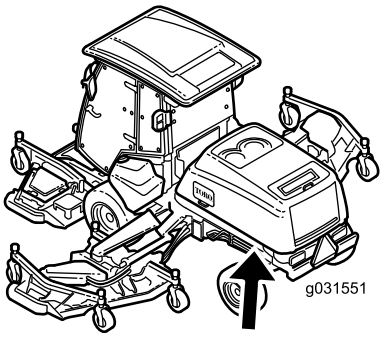

g031551

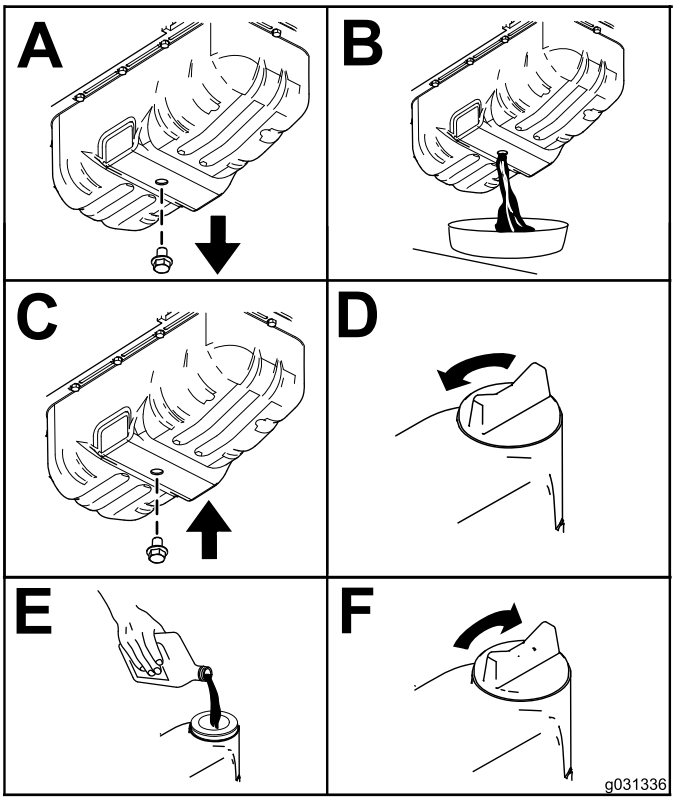

g031336

Figure 83

4. Change the engine-oil filter (Figure 84).

   Note: Ensure that the oil-filter gasket touches the engine, and then an extra 3/4 turn is completed.

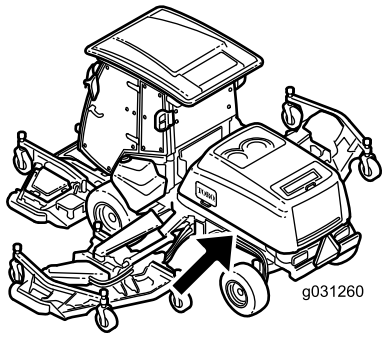

g031260

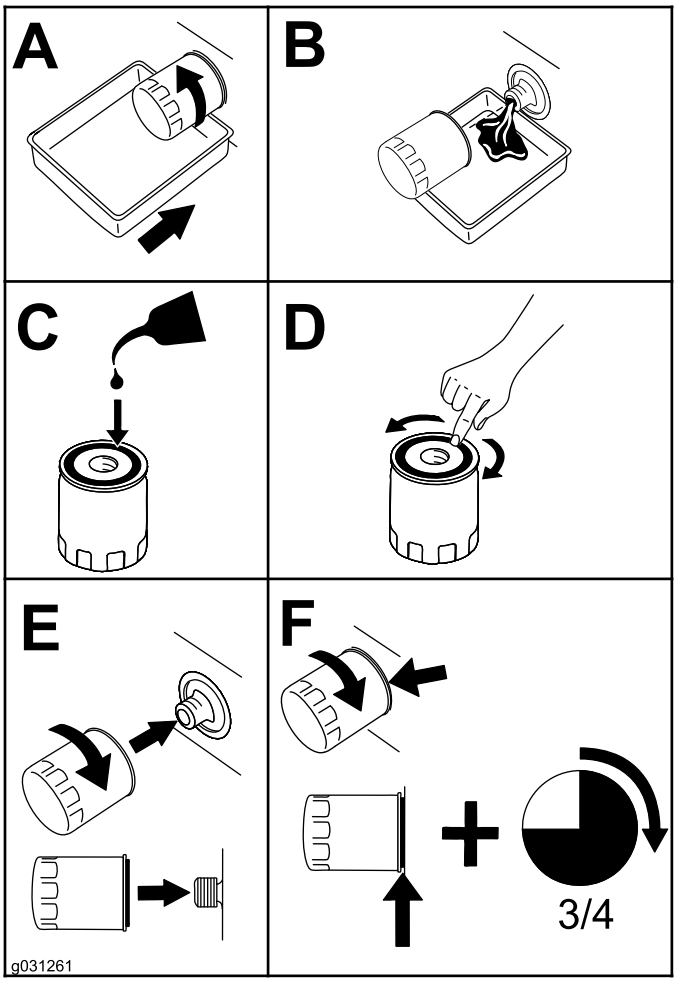

g031261

Figure 84

Adjusting the Engine-Valve Clearance

Service Interval: Every 1,000 hours

Refer to your engine operator's manual for the adjustment procedure.

Cleaning the Engine EGR Cooler

Service Interval: Every 1,500 hours

For information on cleaning the engine EGR cooler, refer to your engine operator's manual.

Inspecting the Engine Crankcase-Breather System

Service Interval: Every 1,500 hours

For information on inspecting the engine crankcase-breather system, refer to your engine operator's manual.

Checking and Replacing Fuel Hoses and Engine-Coolant Hoses

Service Interval: Every 2,000 hours

For information on checking and replacing fuel hoses and engine-coolant hoses, refer to your engine operator's manual.

Lapping or Adjusting the Engine Intake and Exhaust Valves

Service Interval: Every 2,000 hours

For information on lapping or adjusting the engine intake and exhaust valves, refer to your engine owner's manual.

Inspecting and Cleaning Engine-Emission-Control Components and Turbocharger

Service Interval: Every 3,000 hours

For information on inspecting and cleaning the engine-emission-control components, refer to your engine operator's manual.

Servicing the Diesel-Oxidation Catalyst (DOC) and the Soot Filter

Service Interval: Every 6,000 hours or clean the soot filter if active faults SPN 3251 HIGH, SPN 3720 TOO HIGH SEVERE, or SPN 3720 HIGH display in the InfoCenter.

If engine faults ACTIVE FAULT SPN 3251 HIGH, ACTIVE FAULT SPN 3720 TOO HIGH SEVERE, or ACTIVE FAULT SPN 3720 HIGHin the InfoCenter (Figure 85) display in the InfoCenter, clean the soot filter using the steps that follow:



g214978

Figure 85



g214980

Figure 86



g214979

Figure 87

1. Refer to the Engine section in the *Service Manual* for information on disassembling and assembling the diesel-oxidation catalyst and the soot filter of the DPF.
2. Refer to your Authorized Toro Distributor for diesel-oxidation catalyst and the soot filter replacement parts or service.
3. Contact your Authorized Toro Distributor to have them reset the engine ECU after you install a clean DPF.

Fuel System Maintenance

Servicing the Fuel System

Draining the Fuel Tank

Service Interval: Every 800 hours—Drain and clean the fuel tank.

Drain and clean the tank also if the fuel system becomes contaminated or if you are storing the machine for an extended period of time. Use clean fuel to flush out the tank.

Inspecting the Fuel Lines and Connections

Service Interval: Every 500 hours—Inspect the fuel lines and connections.

Inspect the fuel lines and connections for deterioration, damage, or loose connections.

Servicing the Water Separator

Service Interval: Before each use or daily—Drain the water separator.

Every 400 hours—Replace the fuel/water separator element.

Draining the Water Separator

1. Place a drain pan under the fuel filter.
2. Loosen the drain valve on the bottom of the filter (Figure 88).

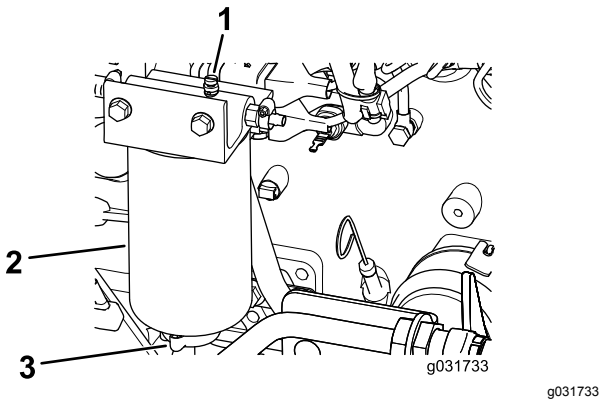

g031733

Figure 88

1. Vent plug
2. Water separator/filter
3. Drain valve

3. Tighten the valve after draining.

Replacing the Water-Separator Element

1. Place a clean container under the water separator.
2. Drain some fuel by loosening the vent plug and opening the drain valve (Figure 88).
3. Clean the area where the filter element mounts to the head.
4. Remove the filter element.
5. Apply a coating of clean fuel or engine oil to the new O-ring and element seal.
6. Install the new filter canister by hand until the gasket contacts the filter head, then tighten it an additional 1/2 turn.

   Note: Do not use tools.
7. Close the drain plug.
8. With the vent plug still loosened, turn the ignition key to the Run position (do not start the engine) so that the electric fuel pump can fill the new filter.
9. When fuel flows from the vent plug, close the vent plug, start the engine, and check for leaks.

   Note: Correct as necessary with the engine off.

Replacing the Fuel Filter Element

Service Interval: Every 500 hours—Replace the fuel-filter element.

1. Clean the area around the fuel-filter head (Figure 89).

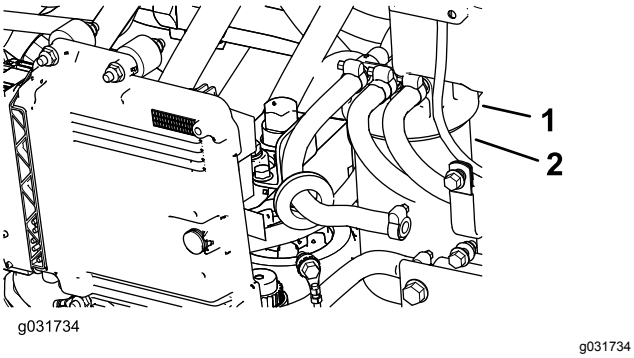

g031734

Figure 89

1. Fuel-filter head
2. Filter

2. Remove the filter and clean the filter-head-mounting surface (Figure 89).
3. Lubricate the filter gasket with clean, lubricating engine oil; refer to the engine owner's manual (included with the machine) for additional information.
4. Install the dry filter canister, by hand, until the gasket contacts the filter head, then rotate it an additional 1/2 turn.
5. Turn the ignition key to the RUN position so that the electric fuel pump can fill the fuel-filter canister.
6. Start the engine and check for fuel leaks around the filter head.

Electrical System Maintenance

Electrical System Safety

- Disconnect the battery before repairing the machine. Disconnect the negative terminal first and the positive last. Connect the positive terminal first and the negative last.
- Charge the battery in an open, well-ventilated area, away from sparks and flames. Unplug the charger before connecting or disconnecting the battery. Wear protective clothing and use insulated tools.

WARNING

CALIFORNIA
Proposition 65 Warning

Battery posts, terminals, and related accessories contain lead and lead compounds, chemicals known to the State of California to cause cancer and reproductive harm. Wash hands after handling.

Locating the Fuses

Important: **If you are installing an auxiliary accessory to the machine, the only approved locations to source power are at the traction-unit fuse block (Figure 94) or the cab-fuse block (Figure 96). A maximum of 10 A is available from either location. Contact your local Toro distributor for assistance.**

Note: Shut off the engine and remove the key before removing the fuses.

The traction-unit fuses (Figure 90) are located in the power-center console behind the seat (Figure 91).

Additional traction-unit fuses (Figure 92) are located on the rear, right side of the machine (Figure 93).

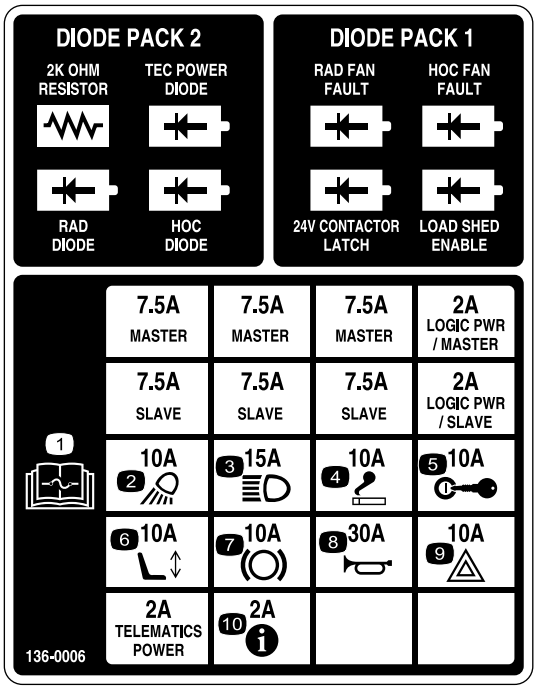

decal136-0006

Figure 90

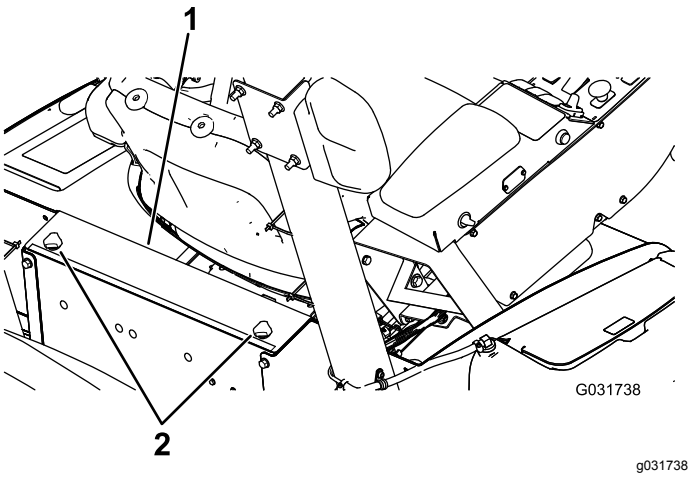

g031738

Figure 91

1. Power-center console
2. Knobs



g033312

Figure 92

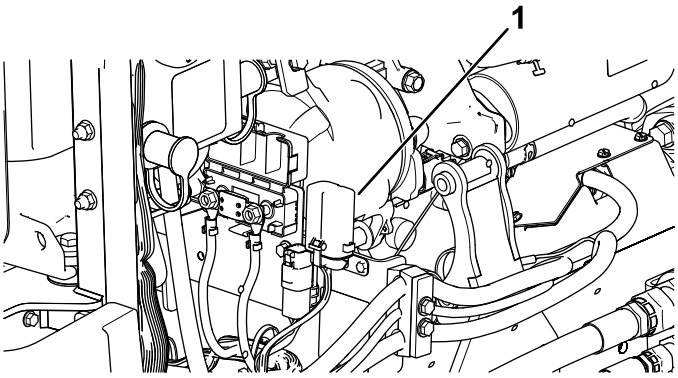

g033314

Figure 93

1. Fuse block

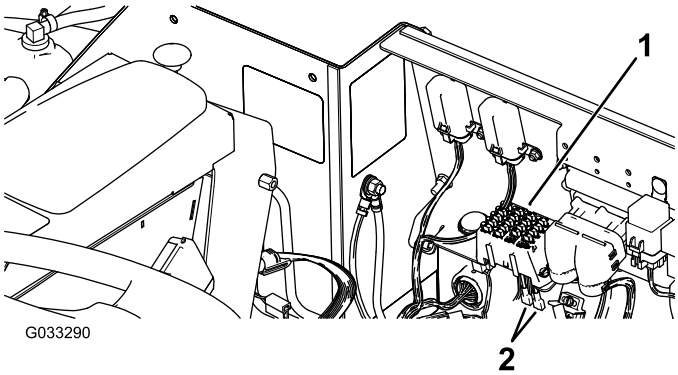

g033290

Figure 94

1. Fuse block
2. Power leads

The cab fuses (Figure 95) are located in the fuse box on the cab headliner (Figure 96).

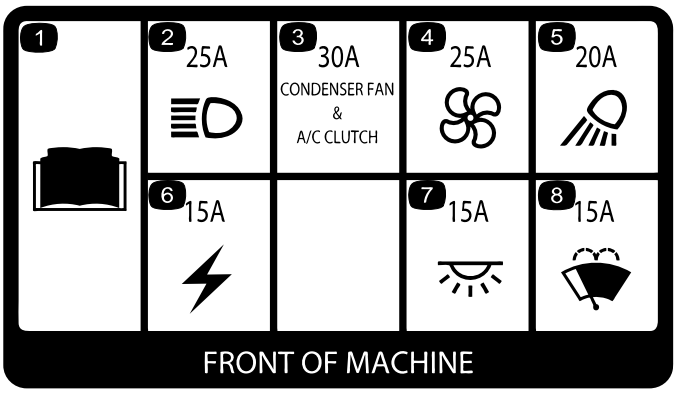

g031740

Figure 95

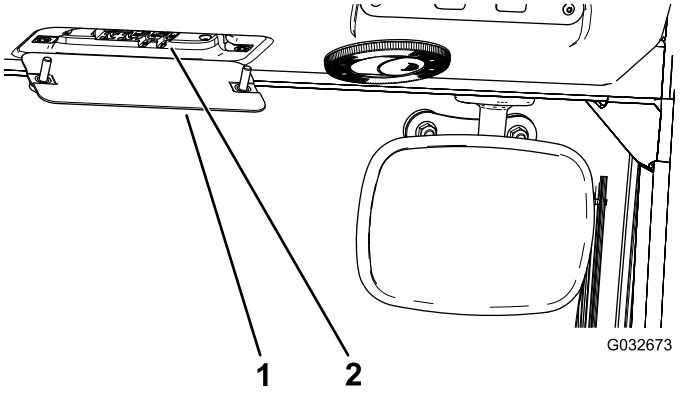

Figure 96

1. Cab fuse box
2. Fuses

Checking the Condition of the Batteries

Service Interval: Every 50 hours—Check the condition of the batteries.

Important: **Before welding on the machine, disconnect the battery to prevent damage to the electrical system. Also, you must disconnect the engine controller, InfoCenter, and machine controllers before welding on the machine.**

Note: Keep the terminals and the entire battery case clean, because a dirty battery discharges slowly. To clean the battery, wash the entire case with a solution of baking soda and water. Rinse with clear water. Coat the battery posts and cable connectors with Grafo 112X (skin-over) grease (Toro Part No. 505-47) or petroleum jelly to prevent corrosion.

Charging the Batteries

⚠ WARNING

Charging the batteries produces gasses that can explode.

Do not smoke near the battery, and keep sparks and flames away from the batteries.

Important: **Keep the batteries fully charged. This is especially important to prevent battery damage when the temperature is below 32°F (0°C).**

1. Perform the pre-maintenance procedure; refer to Pre-Maintenance Procedures (page 54).
2. Clean the exterior of the battery case and the battery posts.

   Note: Connect the leads of the battery charger to battery posts before connecting the charger to the electrical source.
3. Remove the covers from the jump posts (Figure 97).

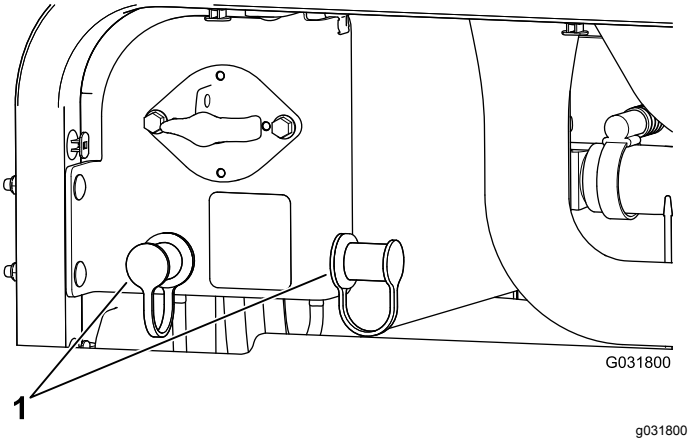

Figure 97

1. Jump-post covers

4. Connect the positive lead of the battery charger to the positive jump post (Figure 98).

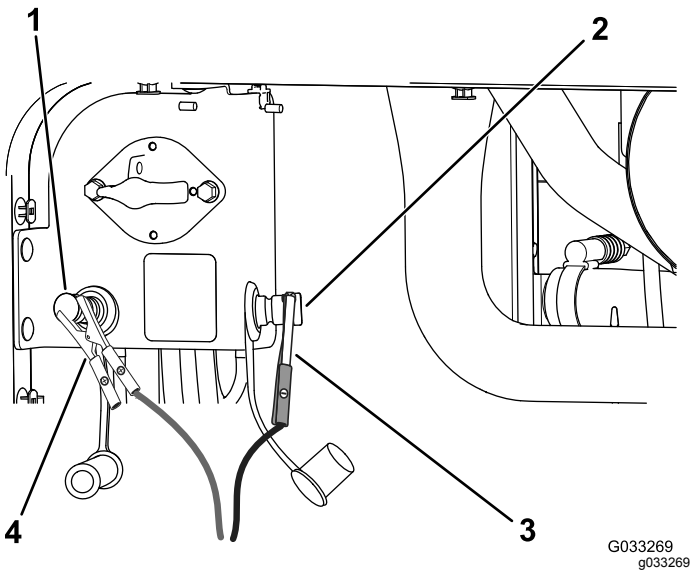

Figure 98

1. Positive (+) jump post
2. Negative (-) jump post
3. Negative (-) jumper-cable clamp
4. Positive (+) jumper-cable clamp

5. Connect the negative lead of the battery charger to the negative jump post (Figure 98).
6. Connect the battery charger to the electrical source, and charge the battery according to the Battery-charging Table that follows.

   Important: **Do not overcharge the battery.**

Battery-charger Table

Charger setting	Charging time
4 to 6 A	30 minutes
25 to 30 A	10 to 15 minutes

7. When the batteries are fully charged, unplug the charger from the electrical source, then disconnect the charger leads from the jump posts (Figure 98).

Jump-Starting the Machine

⚠ WARNING

Jump-starting the battery can produce gasses that can explode.

Do not smoke near the battery and keep sparks and flames away from battery.

Note: This procedure requires 2 people to perform. Ensure that the person making the connections wears the proper face protection, protective gloves, and clothing.

1. Park the machine on a level surface, engage the parking brake, lower the cutting deck, and shut off the engine.
2. Sit in the operator seat and have the other person make the connections.

   Note: Ensure that the jumper battery is a 12V battery.

   Important: **If you are using another machine for power, ensure that the 2 machines are not touching each other.**
3. Remove the covers from the jump posts (Figure 97).
4. Connect the positive (+) jumper cable to the positive jump post (Figure 99).

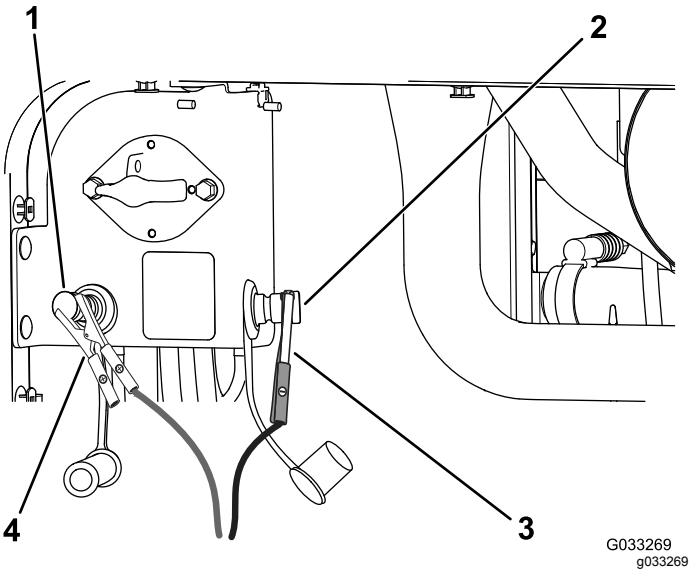

Figure 99

1. Positive (+) jump post
2. Negative (-) jump post
3. Negative (-) jumper-cable clamp
4. Positive (+) jumper-cable clamp

5. Connect the negative (-) jumper cable to the negative jump post (Figure 99).
6. Start the engine.

   Important: **If the engine starts and then stops, *do not* operate the starter motor until the starter motor stops turning. *Do not* operate the starter motor for more than 30 seconds at one time. Wait 30 seconds before operating the starter motor to cool the motor.**
7. When the engine starts, have the other person disconnect the negative (-) jumper cable from the negative jump post and then disconnect the positive (+) jumper cable (Figure 99).

Removing the Batteries

1. Open the hood and turn the battery-disconnect switch to the OFF position.
2. Remove the three 3 flange screws from each side of the rear bumper as shown in Figure 100.
3. Loosen the remaining flange screws securing the rear bumper to the frame and pivot the bumper downward.

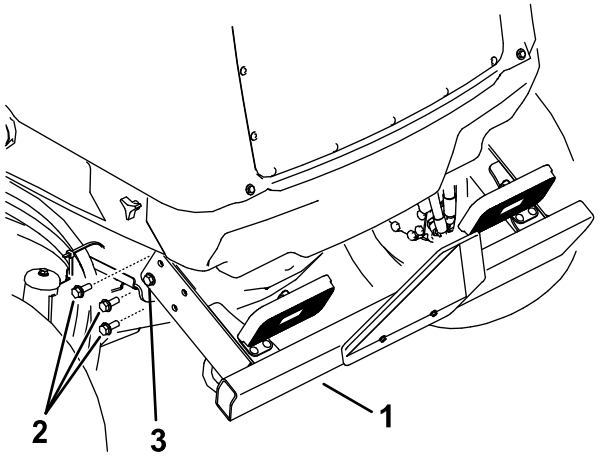

g199824

Figure 100

1. Rear bumper
2. Loosen this flange screw on both sides.
3. Remove these 3 flange screws on both sides.

4. Loosen the knobs and remove both side shrouds (Figure 101).

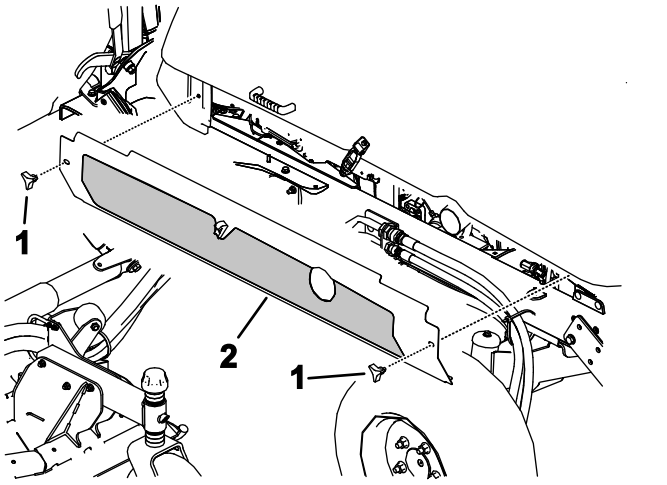

g199825

Figure 101

1. Knobs
2. Remove the side shrouds on both sides

5. Remove the 6 flange screws securing rear shroud to the frame and remove the rear shroud (Figure 102).

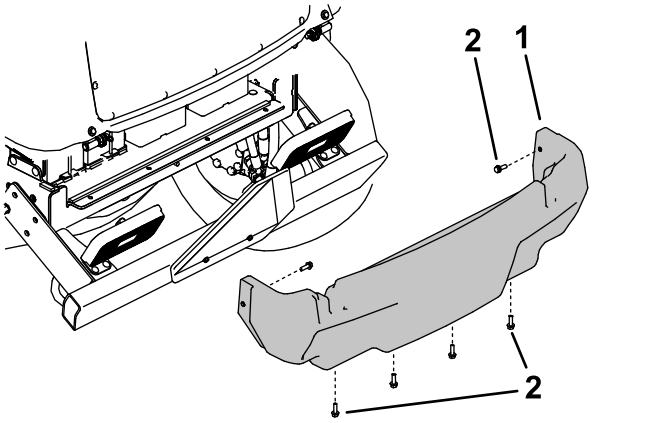

g199826

Figure 102

1. Rear shroud
2. Flange screw

6. Remove the fasteners that secure the battery cover to the machine and remove the cover (Figure 103).

   Note: Make note of how and where the battery cables are installed.
7. Loosen and remove the battery cables from the batteries.
8. Remove the fasteners that secure the battery-hold downs.
9. Carefully remove the batteries from the machine (Figure 103).

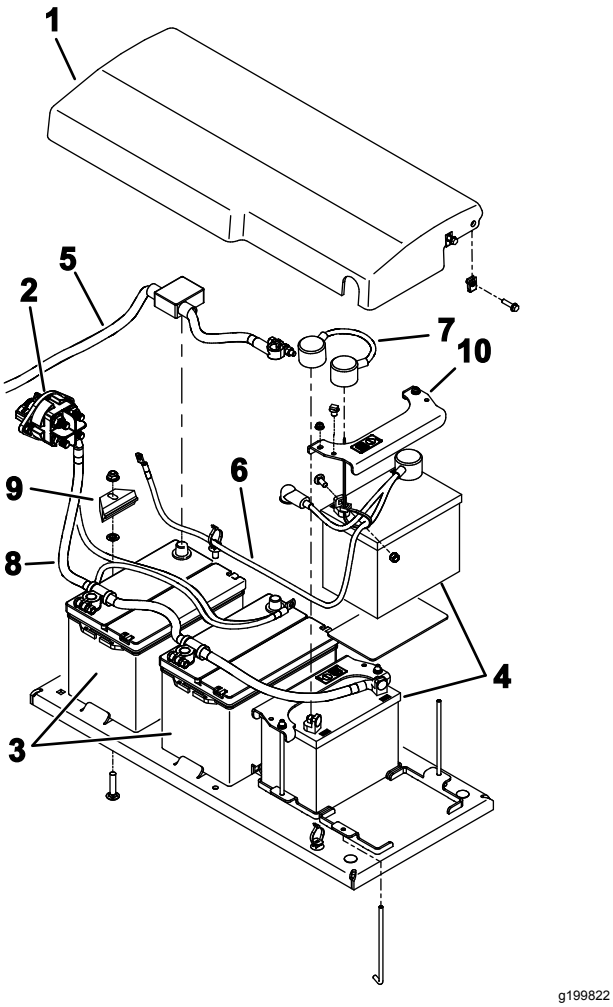

Figure 103

1. Battery cover
2. Battery-disconnect switch
3. Batteries—12 V (for 12 VDC system)
4. Batteries—12 V (for 24 VDC system)
5. Positive (+) cable (for 12 VDC system)
6. Cable assembly (for 24 VDC system)
7. Cable - jumper (for 24 VDC system)
8. Ground cable (-)
9. Battery hold down
10. Battery hold down

Installing the Batteries

1. Secure the batteries with the hold downs (Figure 103).
2. Install the battery cables.
3. Position the battery cover in place and secure it with the removed fasteners.
4. Install the rear shroud (Figure 102).
5. Install the side shrouds (Figure 101).
6. Raise the rear bumper into position and install the flange screws. Tighten all the flange screws securing the rear bumper to the frame (Figure 100).
7. Turn the battery-disconnect switch to the ON position.

Drive System Maintenance

Calibrating the Traction Pedal

Service Interval: Every 1,000 hours—Calibrate the traction pedal.

Contact your local Toro distributor or refer to the *Toro Service Manual* for assistance.

Adjusting the Traction-Pedal Angle

You can adjust the operating angle of the traction pedal for your comfort.

1. Loosen the 2 nuts and bolts securing the left side of the traction pedal to the bracket (Figure 104).

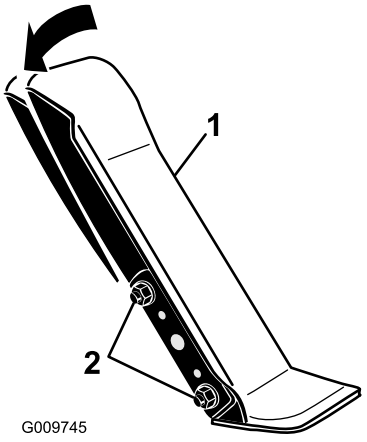

Figure 104

1. Traction pedal
2. Mounting nuts and bolts

2. Pivot the pedal to the desired operating angle and tighten the nuts (Figure 104).

Checking the Rear Wheel Toe-In

Service Interval: Every 1,000 hours—Check the rear wheel toe-in.

1. With the rear tires in a straight position, measure the outside distance (at axle height) at the front and rear of the rear tires (Figure 105).

   Note: The front measurement should be 0 to 3 mm (0 to 0.12 inch) greater than the rear measurement.

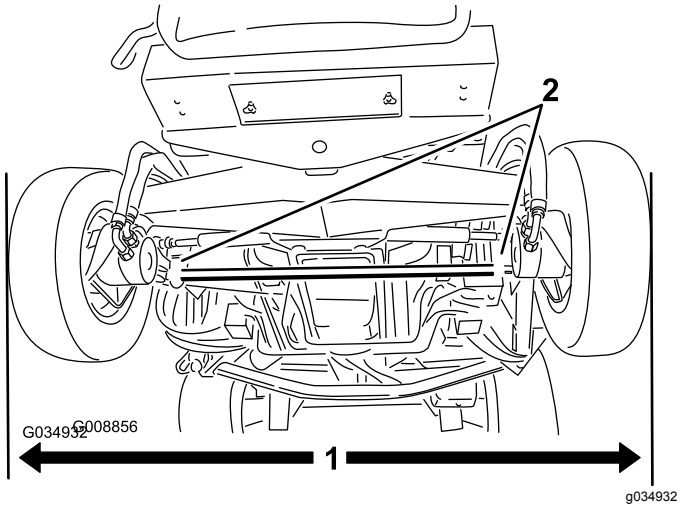

Figure 105

1. Outside distance
2. Tie-rod clamps

2. To adjust the toe-in, loosen the clamps at both ends of the tie rods (Figure 105).
3. Rotate the tie-rod to move the front of the tire inward or outward.
4. Once you achieve the correct toe-in, tighten the tie-rod clamps.

Cooling System Maintenance

Cooling System Safety

- **Swallowing engine coolant can cause poisoning; keep out of reach from children and pets.**
- Discharge of hot, pressurized coolant or touching a hot radiator and surrounding parts can cause severe burns.
  - Always allow the engine to cool at least 15 minutes before removing the radiator cap.
  - Use a rag when opening the radiator cap, and open the cap slowly to allow steam to escape.

Checking the Engine-Cooling System

Service Interval: Before each use or daily—Check the engine-coolant level in the overflow reservoir.

Every 100 hours—Inspect the cooling-system hoses.

The capacity of the system on a machine without a cab is 10.4 L (13.5 US qt) and with a cab is 17 L (18 US qt).

Recommended coolant: Ethelyne glycol anti-freeze and water (50/50 blend).

⚠ DANGER

The rotating fans and drive belts can cause personal injury.

- **Do not operate the machine without the covers in place.**
- **Keep your fingers, hands, and clothing clear of the rotating fan and drive belt.**
- **Shut off the engine, remove the key, and turn the battery-disconnect switch to the OFF position before performing maintenance.**

⚠ CAUTION

If the engine has been running, the pressurized, hot coolant can escape and cause burns.

- **Do not open the radiator cap when the engine is running.**
- **Use a rag when opening the radiator cap, and open the cap slowly to allow steam to escape.**

1. Carefully remove the radiator cap and expansion-tank cap (Figure 106).

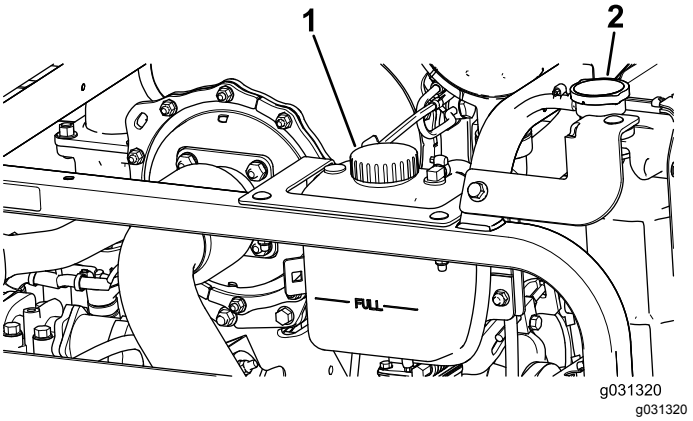

Figure 106

1. Expansion-tank cap
2. Radiator cap

2. Check the coolant level in the radiator (Figure 106).

   Note: When cool, the radiator should be filled to the top of the filler neck and the expansion tank filled to the Full mark.

3. If the coolant is low, add the recommended replacement coolant to the expansion tank to the Full mark.

   Note: Do not use water only or alcohol/methanol-based coolants.

4. Install the radiator cap and expansion-tank cap.

Cleaning the Cooling Systems

Service Interval: Before each use or daily

Perform the pre-maintenance procedure; refer to Pre-Maintenance Procedures (page 54).

Important: **Do not use water to clean the radiator core or hydraulic-fluid-cooler core. Cleaning the radiator core or hydraulic-fluid-cooler core with water can promote premature corrosion and damage to components.**

Cleaning the Radiator

1. Raise the hood to the fully-open position.
2. Pivot the engine-cooling fans rearward of the radiator and lock the prop rod into the notch (Figure 107).

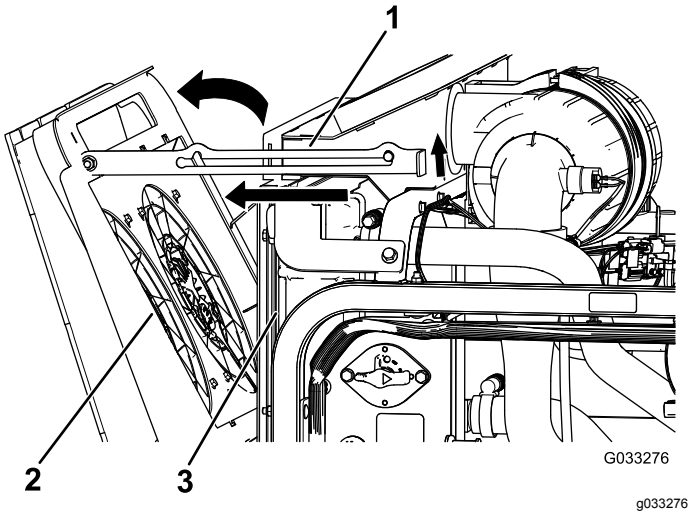

Figure 107

1. Prop rod
2. Engine-cooling fans
3. Radiator

3. Using clean, compressed air, blow the debris from the engine side rearward to clean the radiator core.
4. Pivot the engine-cooling fans forward and lock the prop rod into the notch (Figure 108).

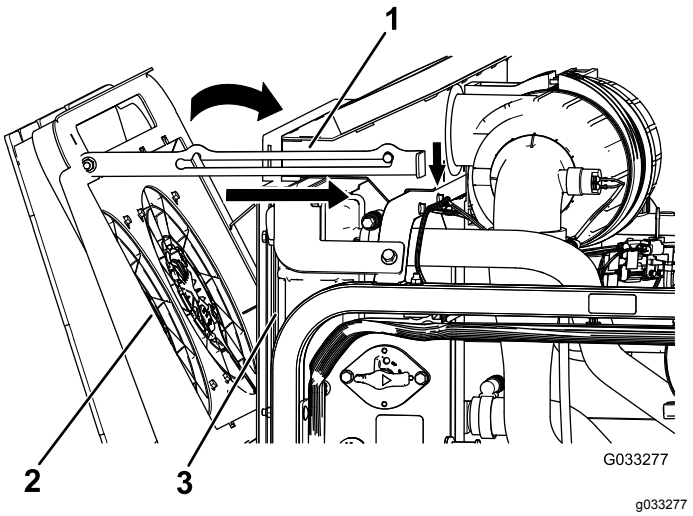

Figure 108

1. Prop rod
2. Engine-cooling fans
3. Radiator

Cleaning the Hydraulic-Fluid Cooler

1. Raise the hood to the fully-open position.
2. Pivot the hydraulic-cooling fans upward and lock the prop rod into the notch (Figure 109).

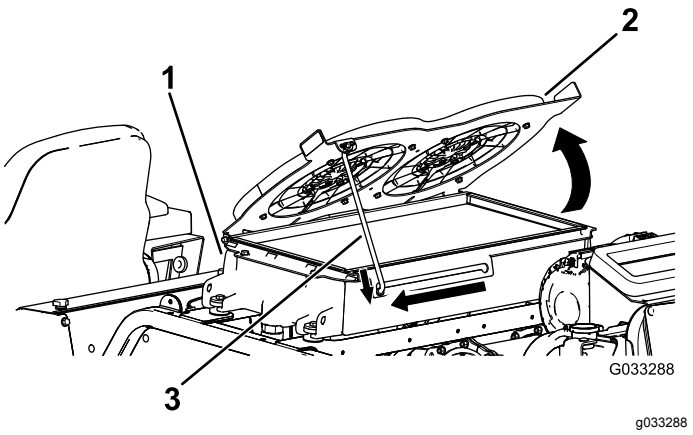

Figure 109

1. Hydraulic-fluid cooler
2. Hydraulic-cooling fans
3. Prop rod

3. Using clean, compressed air, blow the debris from the engine side upward to clean the cooling core.
4. Pivot the hydraulic-cooling fans downward and lock the prop rod into the notch (Figure 110).

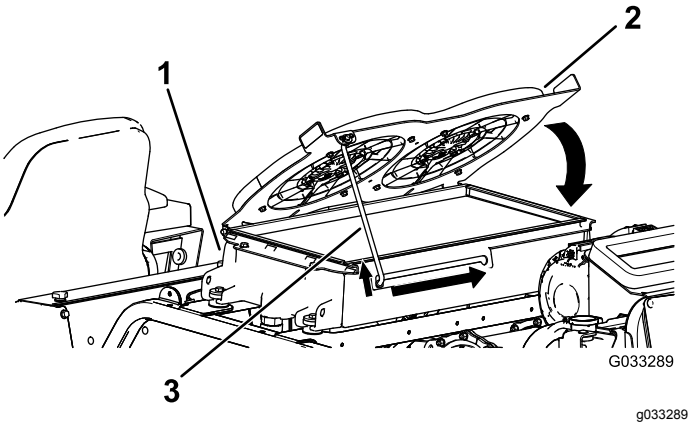

Figure 110

1. Hydraulic-fluid cooler
2. Hydraulic-cooling fans
3. Prop rod

Changing the Engine-Cooling-System Fluid

Service Interval: Every 1,000 hours—Flush the engine-cooling system and replace the fluid.

The capacity of the system on a machine without a cab is 10.4 L (13.5 US qt) and with a cab is 17 L (18 US qt).

1. Perform the pre-maintenance procedure; refer to Pre-Maintenance Procedures (page 54).
2. Remove the radiator cap.
3. With the radiator drain hose placed in a drain pan, open the drain valve on the radiator hose and drain the fluid into a drain pan (Figure 111).

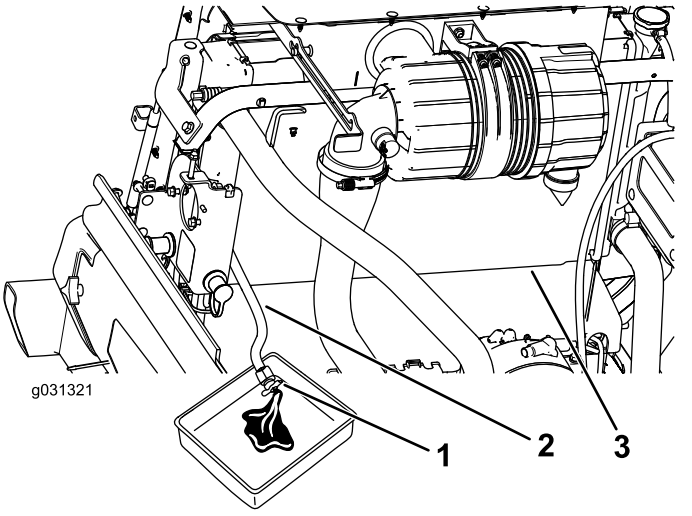

Figure 111

1. Drain valve
2. Radiator drain hose
3. Radiator

4. Close the valve on the radiator drain hose (Figure 111).
5. Fill the radiator with coolant until the coolant level even with the lip of the filler port (Figure 112).

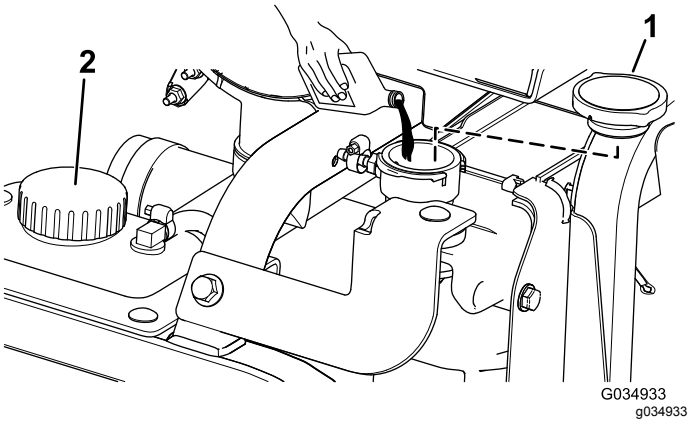

Figure 112

1. Radiator cap
2. Expansion-tank cap

6. Install the radiator cap.
7. Remove the coolant hose from the engine-oil cooler (Figure 113).

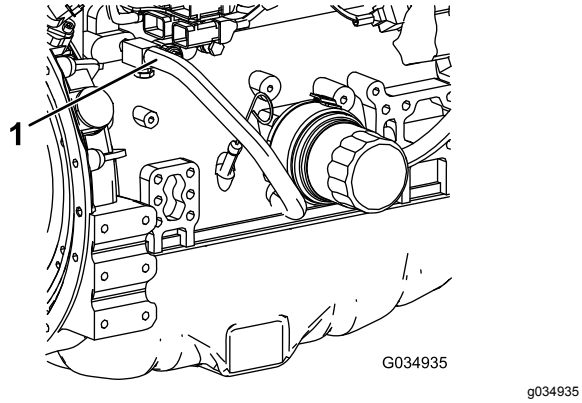

g034935

Figure 113

1. Coolant hose

8. After draining the engine coolant, close the drain valve on the radiator drain hose and connect the coolant hose.
9. Remove the cap of the expansion tank and fill it to the Low mark with engine coolant. Install the cap.
10. Start and run the engine until it reaches operating temperature.
11. Check the engine-coolant level; refer to Checking the Engine-Cooling System (page 73).
12. Add coolant to the expansion tank to bring the coolant level to the Full mark.
13. Check all engine-coolant-hose connections for leaks.

Belt Maintenance

Servicing the 12 V Alternator Belt

Service Interval: After the first 10 hours

Every 1,000 hours

Refer to the engine owner's manual (included with the machine) for the servicing procedure.

Servicing the 24 V Alternator Belt and AC Compressor Belt

Service Interval: After the first 10 hours

Every 1,000 hours

The AC compressor and 24 V alternator belt uses a spring-loaded tensioner that is pre-set at the factory. Refer to the *Toro Service Manual* for the servicing procedure.

Replacing the Blade-Drive Belts

Service Interval: Every 50 hours—Inspect the blade-drive belts.

Every 1,000 hours—Replace the blade-drive belts.

The blade-drive belt, tensioned by the spring-loaded idler pulley, is very durable. However, after many hours of use, the belt will show signs of wear. Signs of a worn belt are squealing when the belt is rotating, blades slipping when cutting grass, frayed edges, burn marks, and cracks. Replace the belt if any of these signs occur.

Replacing the Front Mower-Deck Belts

1. Lower the mower deck to the floor.
2. Remove the belt covers from the top of the mower deck and set the covers aside.
3. On the front deck, center position, loosen the jam nuts on the idler pulley stop screw and thread the stop screw into the bracket (Figure 114).

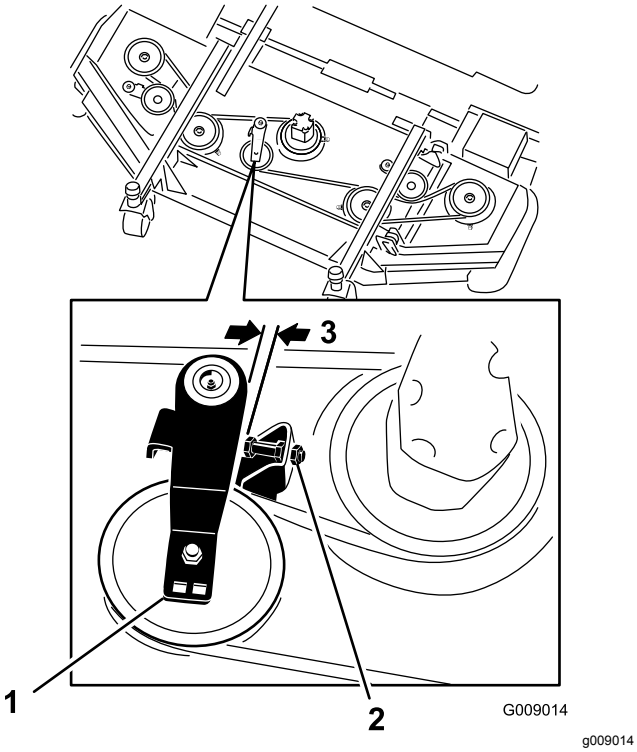

Figure 114

1. Idler pulley
2. Idler stop screw
3. 2.5 mm to 4 mm (0.10 to 0.16 inch)

4. Using a ratchet wrench or similar tool, move each wing-deck idler pulley away from the drive belt to release the belt tension and allow the belt to slip off the wing-deck pulley (Figure 114).
5. Remove the bolts securing the hydraulic motor to the mower deck (Figure 115).

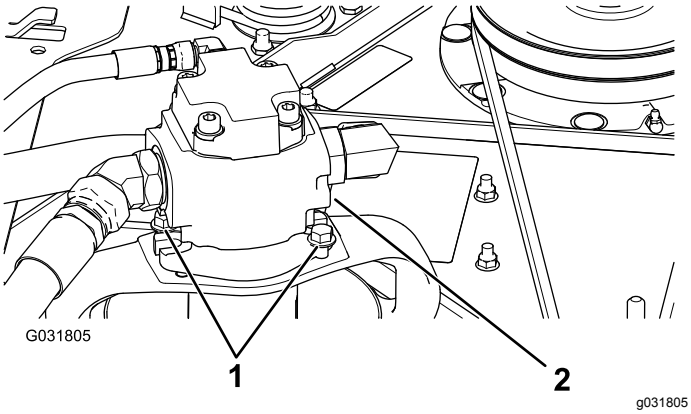

Figure 115

1. Mounting bolts
2. Hydraulic motor

6. Lift the motor off the mower deck and lay it on top of the mower deck.
7. Remove the old belt from around the spindle pulleys and idler pulley.
8. Route the new belt around the spindle pulleys and idler-pulley assembly (Figure 116).

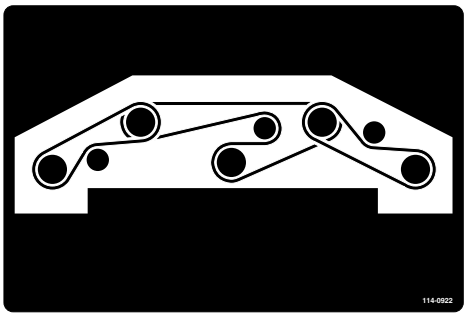

Figure 116

9. Adjust the stop screw on the idler pulley and tighten the jam nuts.
10. Install the belt covers.

Replacing the Wing Mower-Deck Belts

Note: To remove the lower belt, you must remove the upper belt first.

1. Lower the mower deck to the floor.
2. Remove the belt covers from the top of the mower deck and set the covers aside.
3. Remove the bolts securing the hydraulic motor to the mower deck (Figure 115).
4. Lift the motor off the mower deck and lay it on top of the mower deck.
5. Using a ratchet wrench or similar tool, move the idler pulleys away from the drive belt to release the belt tension and allow the belt to slip off the pulleys (Figure 117).

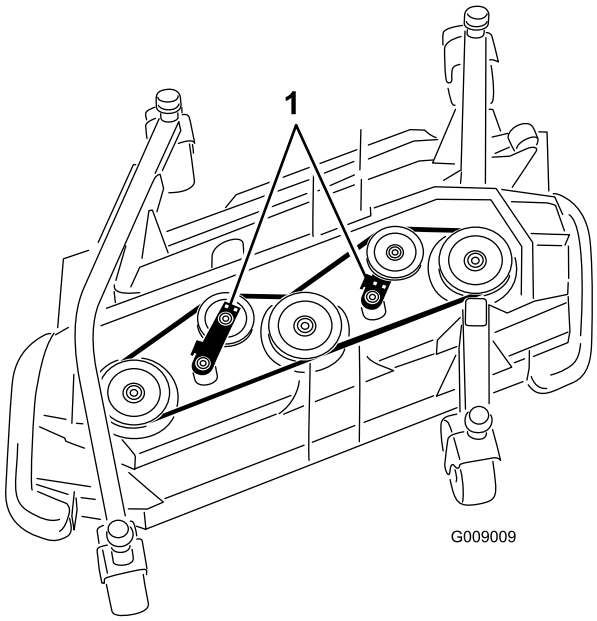

g009009

Figure 117

1. Idler pulleys

6. Remove the old belt from around the spindle pulleys and idler pulley.
7. Route the new belt around the spindle pulleys and idler-pulley assembly (Figure 118 and Figure 119).

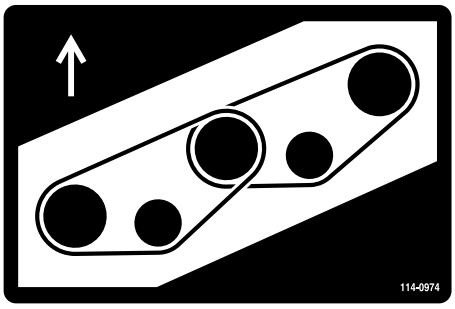

decal114-0974nc

Figure 118
Right deck

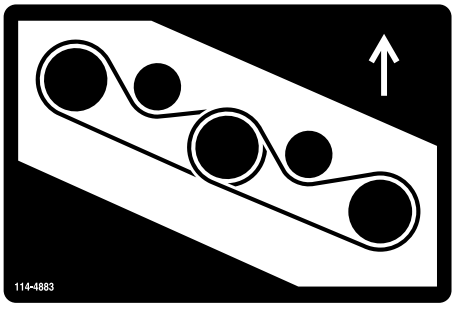

decal114-4883nc

Figure 119
Left deck

Hydraulic System Maintenance

Hydraulic System Safety

- **Ensure that all hydraulic-fluid hoses and lines are in good condition and all hydraulic connections and fittings are tight before applying pressure to the hydraulic system.**
- **Keep your body and hands away from pinhole leaks or nozzles that eject high-pressure hydraulic fluid.**
- **Use cardboard or paper to find hydraulic leaks.**
- **Safely relieve all pressure in the hydraulic system before performing any work on the hydraulic system.**
- **Seek immediate medical attention if fluid is injected into skin. Injected fluid must be surgically removed within a few hours by a doctor.**

Checking the Hydraulic Fluid

Service Interval: Before each use or daily—Check the hydraulic-fluid level.

The hydraulic-fluid reservoir is filled at the factory with approximately 62.7 L (16.6 US gallons) of high-quality hydraulic fluid. **Check the level of the hydraulic fluid before you start the engine for the first time and daily thereafter.**

Use **Toro Premium All-Season Hydraulic Fluid** (Available in 5-gallon pails or 55-gallon drums. See the *Parts Catalog* or Toro distributor for part numbers.)

If the Toro fluid is not available, you may use other fluids provided that they meet all the following material properties and industry specifications. Consult with your lubricant distributor to identify a satisfactory product.

Note: Toro does not assume responsibility for damage caused by improper substitutions, so use only products from reputable manufacturers who will stand behind their recommendation.

High-Viscosity Index/Low-Pour Point Anti-Wear Hydraulic Fluid, ISO VG 46

Material Properties:	
Viscosity, ASTM D445	St @ 40°C 42 to 50
	St @ 100°C 7.6 to 8.5
Viscosity Index ASTM D2270	140 or higher
Pour Point, ASTM D97	-40°F to -49°F
FZG, Fail stage	11 or better
Water content (new fluid)	500 ppm (maximum)
Industry Specifications:	Vickers I-286-S (Quality Level), Vickers M-2950-S (Quality Level), Denison HF-0

Important: **The ISO VG 46 multigrade fluid offers optimal performance in a wide range of temperature conditions. For operation in consistently high ambient temperatures, 65°F (18°C) to 120°F (49°C), ISO VG 68 hydraulic fluid may offer improved performance.**

Important: **Many hydraulic fluids are almost colorless, making it difficult to spot leaks. A red dye additive for the hydraulic-system oil is available in 20 ml (2/3 fl oz) bottles. 1 bottle is sufficient for 15 to 22 L (4 to 6 US gallons) of hydraulic oil. Order Toro Part No. 44-2500 from your authorized Toro distributor.**

1. Perform the pre-maintenance procedure; refer to Pre-Maintenance Procedures (page 54).
2. On the right side of the machine, raise the access cover to expose the hydraulic-tank cap (Figure 120).

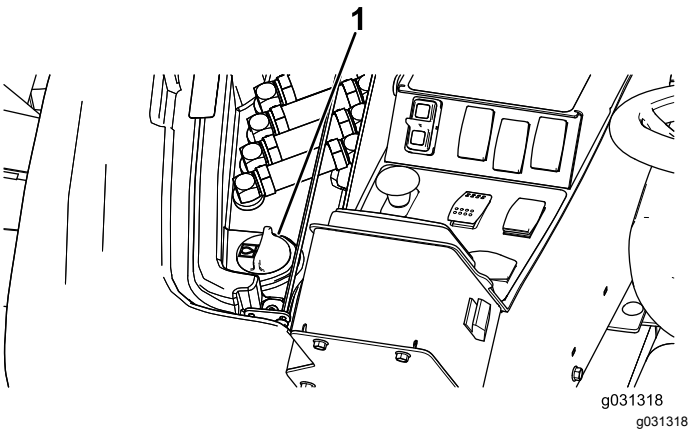

Figure 120

1. Hydraulic-tank cap

3. Clean the area around the filler neck and cap of the hydraulic tank (Figure 120).
4. Remove the cap from the filler neck.
5. Remove the dipstick from the filler neck and wipe it with a clean rag. Insert the dipstick into the filler neck, then remove it and check the fluid level (Figure 121).

   Note: The fluid level should be within the safe operating range on the dipstick.

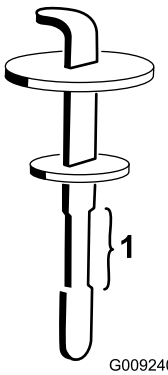

g009240

Figure 121

1. Safe operating range

6. If the level is low, add the appropriate fluid to raise the level to the upper mark.
7. Install the dipstick and cap onto the filler neck.
8. Close the cover.

Changing the Hydraulic Fluid and Filters

Service Interval: Every 1,000 hours

If the hydraulic fluid becomes contaminated, contact your local Toro distributor because the system must be flushed. Contaminated fluid looks milky or black when compared to clean fluid.

Use Toro replacement filters (Part No. 86-6110 for the left side of the machine and Part No. 75-1310 for the right side of the machine).

Important: **Using any other filter may void the warranty on some components.**

1. Park the machine on a level surface, engage the parking brake, lower the cutting deck, shut off the engine, and remove the key.
2. Place a large drain pan under the hydraulic-fluid tank.
3. Remove the hydraulic-tank cap and dipstick.
4. Remove the drain plug from the bottom of the tank and let the hydraulic fluid flow into the pan (Figure 122).

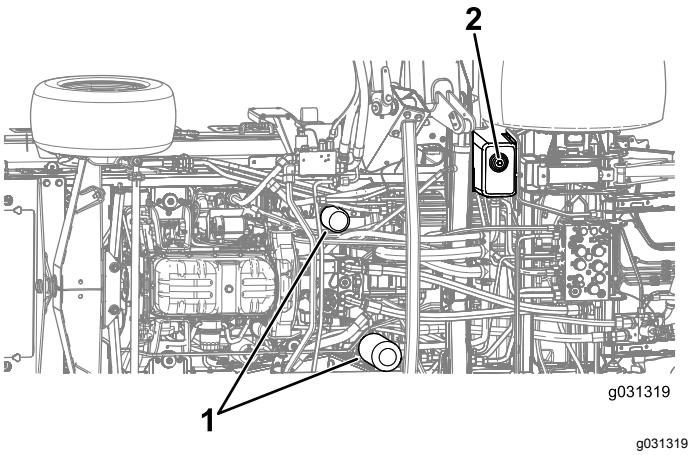

g031319

Figure 122

1. Hydraulic filters
2. Drain plug

5. Install the drain plug when the hydraulic fluid stops draining.
6. Clean the area around the filter-mounting areas.
7. Place a drain pan under the filter and remove the filter (Figure 122).
8. Lubricate the new filter gasket and fill the filter with hydraulic fluid.
9. Ensure that each filter-mounting area is clean and screw the filter on until the gasket contacts the mounting plate; then tighten the filter an additional 1/2 turn.
10. Fill the reservoir with hydraulic fluid; refer to Checking the Hydraulic Fluid (page 78).

    Important: **Use only the hydraulic fluids specified. Other fluids could cause system damage.**
11. Install the reservoir dipstick and cap.
12. Start the engine and use all of the hydraulic controls to distribute hydraulic fluid throughout the system.

    Note: Also, check for leaks, then shut off the engine.
13. Check the fluid level and add enough to raise the level to the Full mark on the dipstick.

    Note: Do not overfill.

Checking the Hydraulic Lines and Hoses

Service Interval: Every 2 years—Replace moving hydraulic lines and hoses.

Inspect the hydraulic lines and hoses daily for leaks, kinked lines, loose mounting supports, wear, loose fittings, weather deterioration, and chemical deterioration. Make all necessary repairs before operating the machine.

Inspecting the Hydraulic System Test Ports

The test ports are used to test the pressure in the hydraulic circuits. Contact your local Toro distributor or refer to the *Toro Service Manual* for assistance.

Pivoting (Tilting) the Front Mower Deck Upright

Note: Although not needed for normal maintenance procedures, you can pivot (tilt) the front mower deck upright.

1. Raise the front mower deck slightly off the floor.
2. Perform the pre-maintenance procedure; refer to Pre-Maintenance Procedures (page 54).
3. Remove the retainer clip and disconnect the damper assembly from the mower deck (Figure 123).

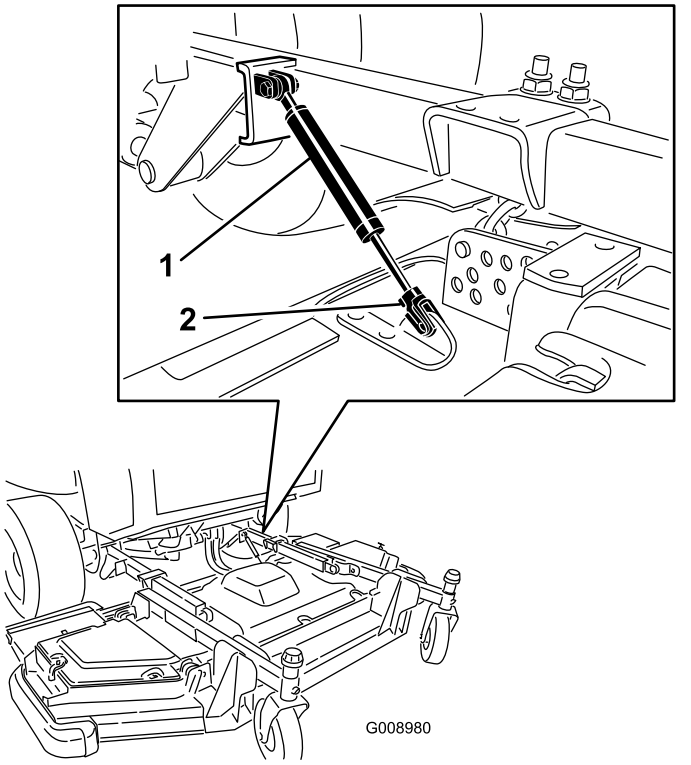

Figure 123

1. Damper assembly
2. Retainer clip

4. Remove the hairpin cotter and clevis pin securing the height-of-cut chains to the rear of the mower deck (Figure 124).

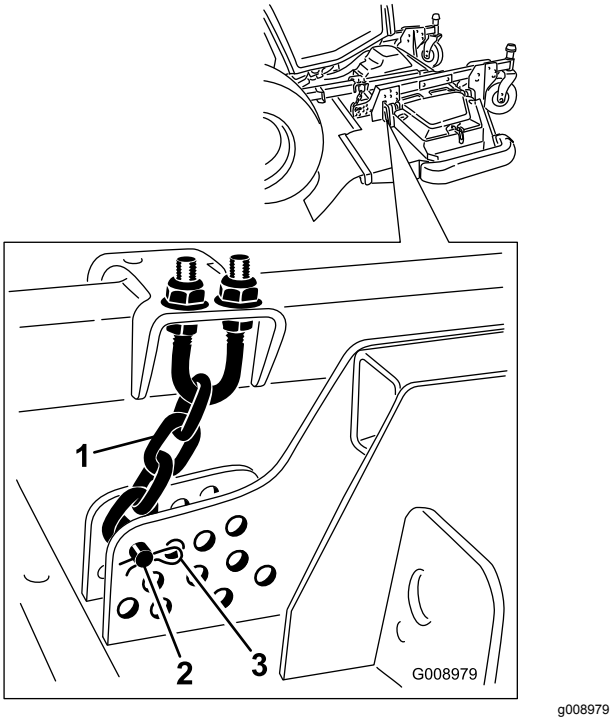

Figure 124

1. Height-of-cut chain
2. Clevis pin
3. Hairpin cotter

5. Start the engine, slowly raise the front mower deck, shut off the engine, and remove the ignition key.
6. Wedge a block of wood between the rear of the deck and the machine (Figure 125).

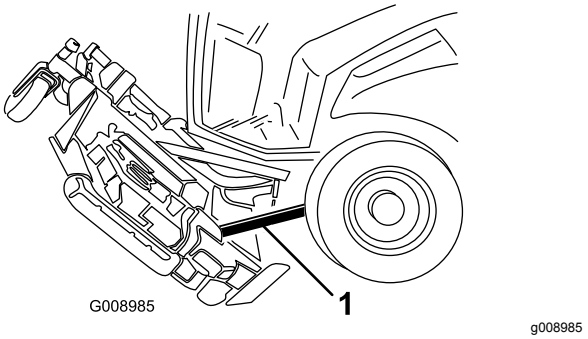

Figure 125

1. Block of wood

Pivoting (Tilting) the Front Mower Deck Down

1. With the help of another person holding the front of the mower deck, remove the block of wood.
2. Sit on the seat, start the engine, and lower the mower deck until it is slightly off the floor.
3. Secure the height-of-cut chains to the rear of the mower deck.

4. Connect the damper assembly and secure it with the retainer clip.

Adjusting the Mower-Deck Pitch

Measuring the Mower-Deck Pitch

The mower-deck pitch is the difference between the height of cut from the front tip of the blade to the back tip. Set a blade pitch of 6.3 to 9.7 mm (0.25 to 0.38 inch); i.e., the back tip of the blade should be 7.5 mm (0.3 inch) higher than the front tip.

1. Park the machine on a level surface, engage the parking brake, lower the cutting deck, shut off the engine, and remove the key.
2. Set the mower deck to the desired height of cut.
3. Ensure that the winglets are level to the front deck and the front deck is level side to side.

Adjusting the Front Mower-Deck Pitch

1. Rotate each blade so that they point straight forward (Figure 126).

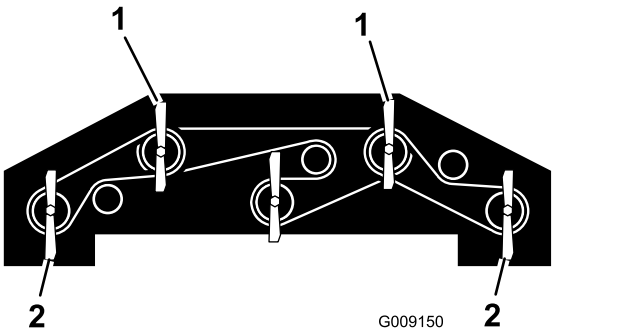

g009150

Figure 126

1. Use 1 of these blades for measuring the front-blade height.
2. Use 1 of these blades for measuring the rear-blade height.

2. Using a short ruler, measure from the floor to the front tip of the front blade and record this dimension.
3. Measure from the floor to the back tip of the winglet blade and record this dimension.
4. Subtract the front dimension from the rear dimension to calculate the pitch of each blade.
5. Loosen the jam nuts on the top or bottom of the height-of-cut chain U-bolt (Figure 127).

   Note: Loosen or tighten the height-of-cut chain nuts equally, so that the deck remains level from side to side.

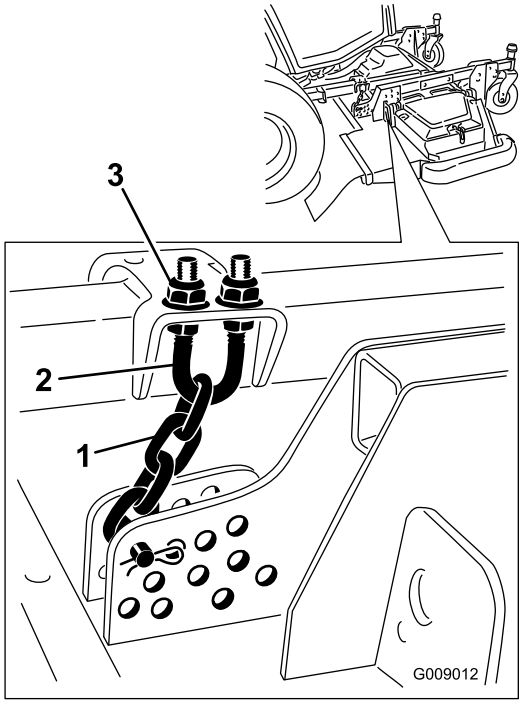

g009012

Figure 127

1. Height-of-cut chain
2. U-bolt
3. Nut (2)

6. Adjust the other set of nuts to raise or lower the rear of the mower deck and attain the correct mower-deck pitch based on the average pitch of each blade.
7. Tighten the jam nuts.

Adjusting the Wing Mower-Deck Pitch

1. Remove the tensioning cap from the caster-spindle shaft and slide the spindle out of the caster arm (Figure 128).

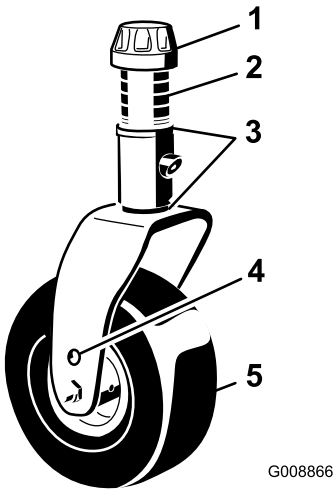

Figure 128

1. Tensioning cap
2. Spacers
3. Shims
4. Top axle-mounting hole
5. Caster wheel

2. Position the shims, as required, to raise or lower the caster wheel until the mower deck has the correct pitch.
3. Install the tensioning cap.

Servicing the Caster-Arm Bushings

The caster arms have bushings pressed into the top and bottom of the tube, and after many hours of operation, the bushings wear. To check the bushings, move the caster fork back and forth and from side to side. If the caster spindle is loose inside the bushings, the bushings are worn; replace them.

Remove the tensioning cap and caster fork (Figure 128).

Note: Record the position of the washers and spacers before you remove them so that you do not need to adjust the deck pitch.

Servicing the Caster Wheels and Bearings

Service Interval: Every 500 hours—Inspect the mower deck caster-wheel assemblies.

1. Remove the locknut from the bolt holding the caster-wheel assembly between the caster fork or the caster-pivot arm (Figure 129).

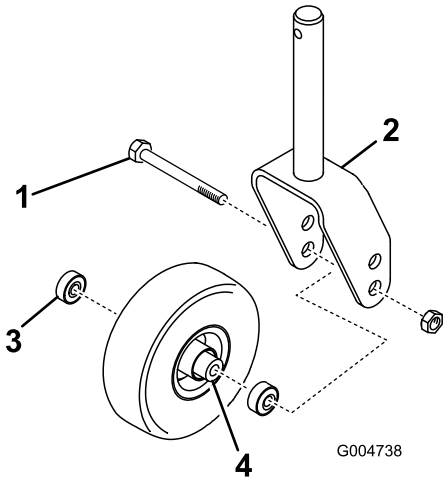

Figure 129

1. Caster wheel
2. Caster fork
3. Bearing
4. Bearing spacer

2. Grasp the caster wheel and slide the bolt out of the fork or pivot arm (Figure 129).
3. Remove the bearing from the wheel hub and allow the bearing spacer to fall out (Figure 129).
4. Remove the bearing from the opposite side of the wheel hub (Figure 129).
5. Check the bearings, spacer, and inside of the wheel hub for wear.

   Note: Replace any damaged parts.
6. To assemble the caster wheel, push the bearing into the wheel hub.

   Note: When installing the bearings, press on the outer race of the bearing.
7. Slide the bearing spacer into the wheel hub and push the other bearing into the open end of the wheel hub to captivate the bearing spacer inside the wheel hub.
8. Install the caster-wheel assembly between the caster fork and secure it in place with the bolt and locknut.

Blade Maintenance

Blade Safety

A worn or damaged blade can break, and a piece of the blade could be thrown toward you or bystanders, resulting in serious personal injury or death.

- Inspect the blade periodically for wear or damage.
- Use care when checking the blades. Wrap the blades or wear gloves, and use caution when servicing the blades. Only replace or sharpen the blades; never straighten or weld them.
- On multi-bladed machines, take care as rotating 1 blade can cause other blades to rotate.

Checking for a Bent Blade

After striking a foreign object, inspect the machine for damage and make repairs before restarting and operating the equipment. Torque all the spindle-pulley nuts to 176 to 203 N·m (130 to 150 ft-lb).

1. Raise the mower deck.
2. Perform the pre-maintenance procedure; refer to Pre-Maintenance Procedures (page 54).
3. Block the mower deck to prevent it from accidentally falling.
4. Rotate the blade until the ends face forward and backward, and measure from the inside of the mower deck to the cutting edge at the front of the blade (Figure 130).

   Note: Record this dimension.

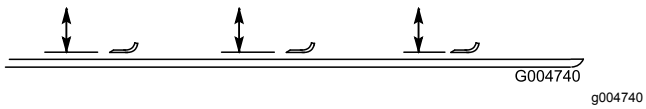

Figure 130

5. Rotate the opposite end of the blade forward and measure between the mower deck and cutting edge of the blade at the same position as in step 4.

   Note: The difference between the dimensions obtained in steps 4 and 5 must not exceed 3 mm (1/8 inch). If the dimension exceeds 3 mm (1/8 inch), the blade is bent and must be replaced; refer to Removing and Installing a Blade (page 84).

Removing and Installing a Blade

Replace the blade if it hits a solid object, if it is out of balance, or if it is bent. Always use genuine Toro replacement blades to be sure of safety and optimum performance. Never use replacement blades made by other manufacturers because they could be dangerous.

1. Raise the mower deck to the highest position.
2. Perform the pre-maintenance procedures; refer to Pre-Maintenance Procedures (page 54).
3. Block the mower deck to prevent it from accidentally falling.
4. Grasp the end of the blade using a rag or thickly padded glove and remove the blade bolt, anti-scalp cup, and blade from the spindle shaft (Figure 131).

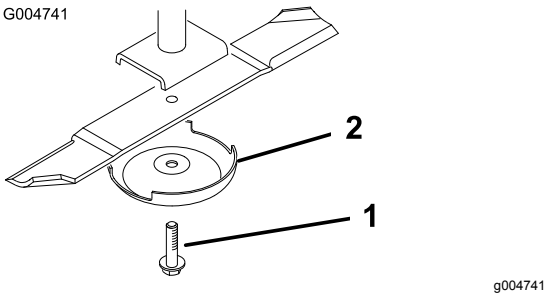

Figure 131

1. Blade bolt
2. Anti-scalp cup

5. Install the blade, anti-scalp cup, and blade bolt.
6. Torque the blade bolt to 115 to 149 N·m (85 to 110 ft-lb).

   Important: **The curved part of the blade must point toward the inside of the mower deck to ensure proper mowing.**

   Note: After striking a foreign object, torque all the spindle-pulley nuts to 176 to 203 N·m (130 to 150 ft-lb) and the blade bolts to 115 to 149 N·m (85 to 110 ft-lb).

Inspecting and Sharpening a Blade

Service Interval: After the first 10 hours

Every 50 hours

Before each use or daily

You must consider 2 areas of the blade when checking and servicing it: the sail and the cutting edge. Both cutting edges and the sail, which is the turned-up portion opposite of the cutting edge, contribute to a good quality of cut. The sail is important because it lifts the grass up straight, thereby producing an even cut. However, the sail gradually wears down during operation, which is normal. As the sail wears down, the quality of cut degrades somewhat, although the cutting edges are sharp. The cutting edge of the blade must be sharp so that the grass is cut, not torn. A dull cutting edge is evident when the tips of the grass appear brown and shredded. Sharpen the cutting edges to correct this condition.

1. Position the machine on a level surface, raise the mower deck, engage the parking brake, put the traction pedal in NEUTRAL, ensure that the PTO switch is in the OFF position, shut off the engine, and remove the key.
2. Examine the cutting ends of the blade carefully (especially where the flat and curved parts of the blade meet) as shown in Figure 132.

   Note: Since sand and abrasive material can wear away the metal that connects the flat and curved parts of the blade, check the blade before using the mower. If you notice wear, replace the blade (Figure 132).

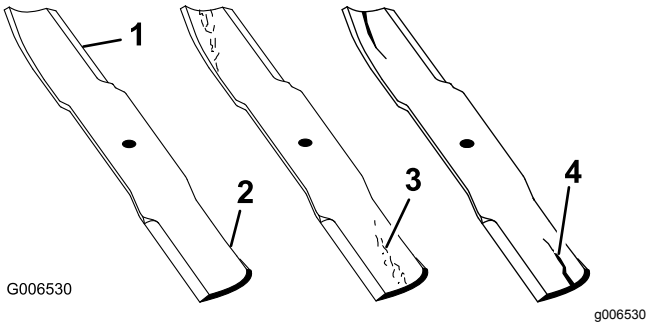

Figure 132

1. Cutting edge
2. Curved area
3. Wear/slot forming
4. Crack

3. Examine the cutting edges of all of the blades.
4. Sharpen the cutting edges if they are dull or nicked (Figure 133).

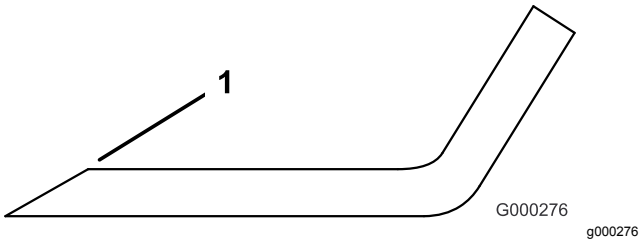

Figure 133

1. Sharpen at the original angle.

   Note: Sharpen only the top of the cutting edge and maintain the original cutting angle to ensure the sharpness.

   Note: The blade will remain balanced if the same amount of metal is removed from both cutting edges.

Note: Remove the blades and sharpen them on a grinder. After sharpening the cutting edges, install the blade with the anti-scalp cup and blade bolt; refer to Removing and Installing a Blade (page 84).

Correcting a Mower-Deck Mismatch

When there is mismatch between the blades on a single mower deck, the grass appears streaked when it is cut. You can correct this problem by ensuring that the blades are straight.

1. Using a 1 m (3 ft) long carpenter's level, find a level surface on the shop floor.
2. Raise the height-of-cut to the highest position; refer to Adjusting the Height of Cut (page 28).
3. Lower the mower deck onto a flat surface and remove the covers from the top of the mower deck.
4. Rotate the blades until the ends face forward and backward.
5. Measure from the floor to the front tip of the cutting edge (record this dimension).
6. Rotate the same blade, so that the opposite end is forward and measure it again.

   Note: The difference between the dimensions must not exceed 3 mm (1/8 inch). If the dimension exceeds 3 mm (1/8 inch), replace the blade, because it is bent. Measure all the blades.
7. Ensure that the deck is level from side to side and adjust as required.
8. Install the belt covers.

Cab Maintenance

Cleaning the Cab

For Machines with a Cab

Important: **Use care around the cab seals and lights (Figure 134). If you are using a pressure washer, keep the washer wand at least 0.6 m (2 ft) away from the machine. Do not use the pressure washer directly on the cab seals and lights or under the rear overhang.**

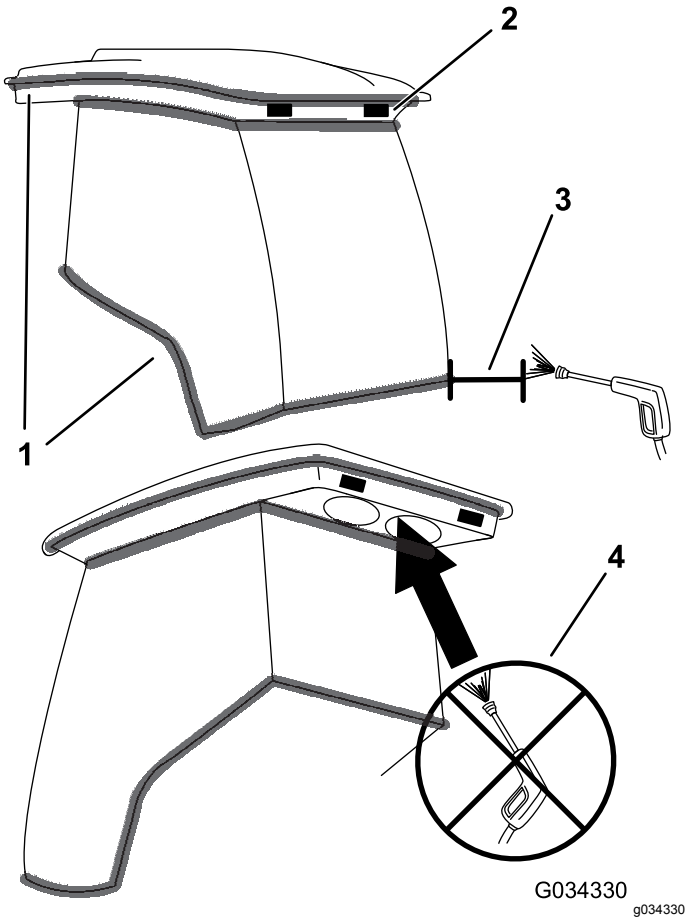

Figure 134

1. Seal
2. Light
3. Keep wand 0.6 m (2 ft) away.
4. Do not pressure-wash under the rear overhang.

Cleaning the Cab Air Filters

Service Interval: Every 250 hours

1. Remove the screws and grates from both the in-cab and rear cab air filters (Figure 135 and Figure 136).

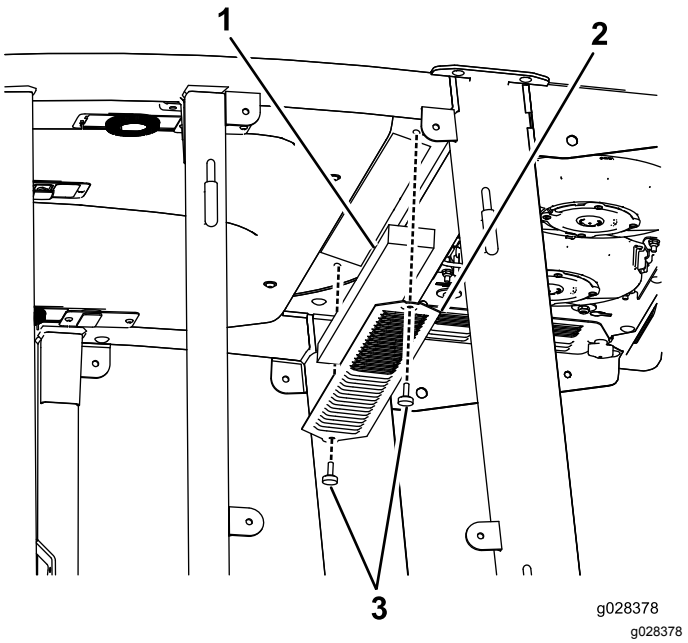

Figure 135
In-Cab Air Filter

1. Filter
2. Grate
3. Screw

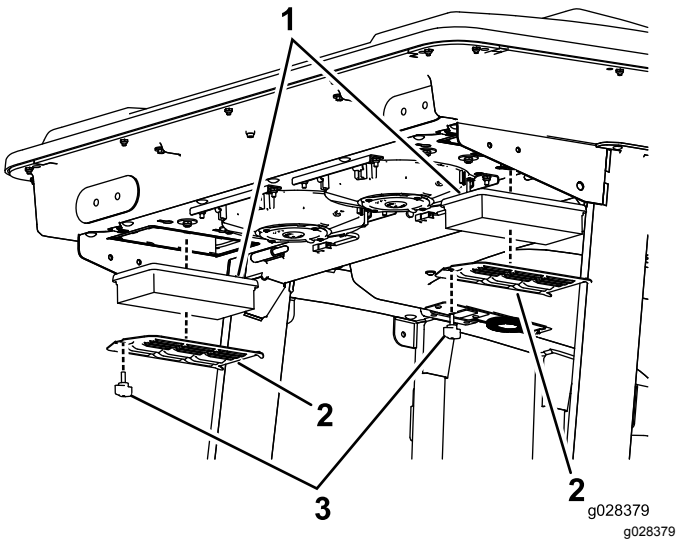

Figure 136
Rear Cab Air Filter

1. Filter
2. Grate
3. Screw

2. Clean the filters by blowing clean, oil-free, compressed air through them.

   Important: **If either filter has a hole, tear, or other damage, replace the filter.**

3. Install the filters and the grate with the thumbscrews.

Cleaning the Cab Pre-Filter

The purpose of the cab pre-filter is to prevent large debris, such as grass and leaves from entering the cab filters.

1. Rotate the screen cover down.
2. Clean the filter with water.

   Note: Do not use a pressure washer.

   Important: **If the filter has a hole, tear, or other damage, replace the filter.**
3. Allow the pre-filter to dry before installing it into the machine.
4. Rotate the filter screen around the tabs until the latch locks into the latch-mount assembly (Figure 137).

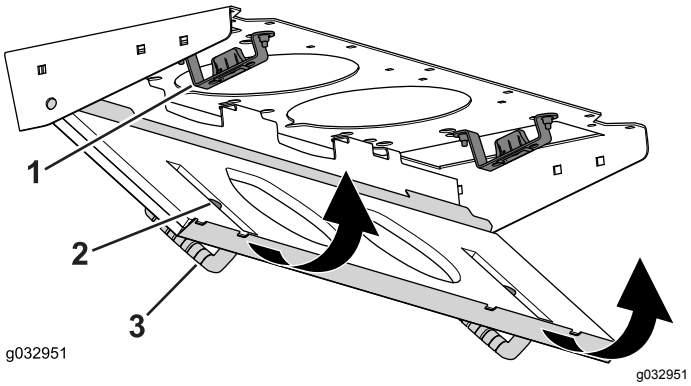

Figure 137

1. Latch-mount assembly
2. Latch
3. Screen cover

Cleaning the Air-Conditioning-Condenser Coil

Service Interval: Every 250 hours Clean it more frequently in extremely dusty or dirty conditions.

1. Perform the pre-maintenance procedure; refer to Pre-Maintenance Procedures (page 54).
2. Disconnect the wire for each fan (Figure 138).

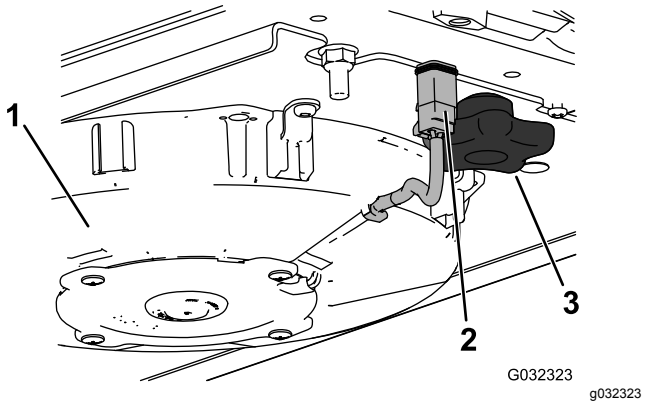

Figure 138
Right Fan Shown

1. Fan
2. Wire
3. Knob

3. Remove the 2 knobs and remove the fan assembly.
4. Open the 4 latches on the air-conditioning assembly and remove the screen (Figure 139).

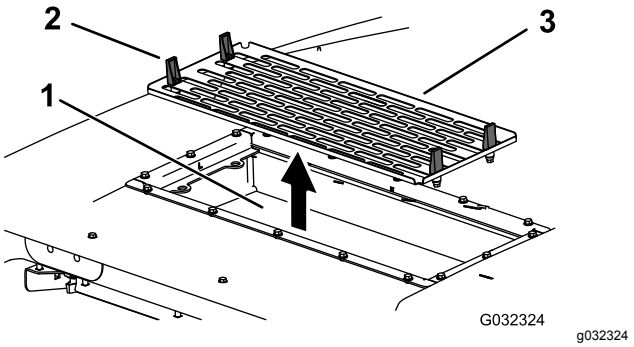

Figure 139

1. Air-conditioning-condenser coil
2. Latch
3. Air-conditioning screen

5. Remove the air filters (Figure 136).
6. Clean the air-conditioning assembly.
7. Install the air filters, screen, and fan assembly (Figure 136, Figure 138, and Figure 139).
8. Connect the wire for each fan (Figure 138).

Storage

Preparing the Machine for Storage

Preparing the Traction Unit

1. Thoroughly clean the traction unit, mower decks, and the engine.

   Important: **Do not use high-pressure water near the Info Center or engine-control unit (ECU), as this may cause damage.**

2. Check the tire pressure; refer to Checking the Tire Pressure (page 28).
3. Check all fasteners for looseness; tighten as necessary.
4. Grease or oil all grease fittings and pivot points and wipe up any excess lubricant; refer to Lubrication (page 56).
5. Lightly sand and use touch-up paint on painted areas that are scratched, chipped, or rusted, and repair any dents in the metal body.
6. Service the battery and cables as follows:
   A. Remove the battery terminals from the battery posts.
   B. Clean the battery, terminals, and posts with a wire brush and baking-soda solution.
   C. Coat the cable terminals and battery posts with Grafo 112X skin-over grease (Toro Part No. 505-47) or petroleum jelly to prevent corrosion.
   D. Slowly charge the battery every 60 days for 24 hours to prevent lead sulfation of the battery.

Preparing the Engine

1. Drain the engine oil from the oil pan and install the drain plug.
2. Remove and install a new oil filter.
3. Fill engine with 10.4 L (11 US qt) of SAE 15W-40 CJ-4 motor oil.
4. Start the engine and run it at idle speed for approximately 2 minutes.
5. Shut off the engine.
6. Flush the fuel tank with fresh, clean fuel.
7. Secure all of the fuel-system fittings.
8. Thoroughly clean and service the air-cleaner assembly.
9. Seal the air-cleaner inlet and the exhaust outlet with weatherproof tape.
10. Check the anti-freeze protection and add a 50/50 solution of water and ethylene glycol anti-freeze as needed for the expected minimum temperature in your area.

Notes:

Notes:

European Privacy Notice

The Information Toro Collects
Toro Warranty Company (Toro) respects your privacy. In order to process your warranty claim and contact you in the event of a product recall, we ask you to share certain personal information with us, either directly or through your local Toro company or dealer.

The Toro warranty system is hosted on servers located within the United States where privacy law may not provide the same protection as applies in your country.

BY SHARING YOUR PERSONAL INFORMATION WITH US, YOU ARE CONSENTING TO THE PROCESSING OF YOUR PERSONAL INFORMATION AS DESCRIBED IN THIS PRIVACY NOTICE.

The Way Toro Uses Information
Toro may use your personal information to process warranty claims, to contact you in the event of a product recall and for any other purpose which we tell you about. Toro may share your information with Toro's affiliates, dealers or other business partners in connection with any of these activities. We will not sell your personal information to any other company. We reserve the right to disclose personal information in order to comply with applicable laws and with requests by the appropriate authorities, to operate our systems properly or for our own protection or that of other users.

Retention of your Personal Information
We will keep your personal information as long as we need it for the purposes for which it was originally collected or for other legitimate purposes (such as regulatory compliance), or as required by applicable law.

Toro's Commitment to Security of Your Personal Information
We take reasonable precautions in order to protect the security of your personal information. We also take steps to maintain the accuracy and current status of personal information.

Access and Correction of your Personal Information
If you would like to review or correct your personal information, please contact us by email at legal@toro.com.

Australian Consumer Law

Australian customers will find details relating to the Australian Consumer Law either inside the box or at your local Toro Dealer.

The Toro Warranty

A Two-Year Limited Warranty

Conditions and Products Covered

The Toro Company and its affiliate, Toro Warranty Company, pursuant to an agreement between them, jointly warrant your Toro Commercial product ("Product") to be free from defects in materials or workmanship for two years or 1500 operational hours*, whichever occurs first. This warranty is applicable to all products with the exception of Aerators (refer to separate warranty statements for these products). Where a warrantable condition exists, we will repair the Product at no cost to you including diagnostics, labor, parts, and transportation. This warranty begins on the date the Product is delivered to the original retail purchaser.
* Product equipped with an hour meter.

Instructions for Obtaining Warranty Service

You are responsible for notifying the Commercial Products Distributor or Authorized Commercial Products Dealer from whom you purchased the Product as soon as you believe a warrantable condition exists. If you need help locating a Commercial Products Distributor or Authorized Dealer, or if you have questions regarding your warranty rights or responsibilities, you may contact us at:

Toro Commercial Products Service Department
Toro Warranty Company
8111 Lyndale Avenue South
Bloomington, MN 55420-1196

952–888–8801 or 800–952–2740
E-mail: commercial.warranty@toro.com

Owner Responsibilities

As the Product owner, you are responsible for required maintenance and adjustments stated in your *Operator's Manual*. Failure to perform required maintenance and adjustments can be grounds for disallowing a warranty claim.

Items and Conditions Not Covered

Not all product failures or malfunctions that occur during the warranty period are defects in materials or workmanship. This warranty does not cover the following:

- Product failures which result from the use of non-Toro replacement parts, or from installation and use of add-on, or modified non-Toro branded accessories and products. A separate warranty may be provided by the manufacturer of these items.
- Product failures which result from failure to perform recommended maintenance and/or adjustments. Failure to properly maintain your Toro product per the Recommended Maintenance listed in the *Operator's Manual* can result in claims for warranty being denied.
- Product failures which result from operating the Product in an abusive, negligent, or reckless manner.
- Parts subject to consumption through use unless found to be defective. Examples of parts which are consumed, or used up, during normal Product operation include, but are not limited to, brake pads and linings, clutch linings, blades, reels, rollers and bearings (sealed or greasable), bed knives, spark plugs, castor wheels and bearings, tires, filters, belts, and certain sprayer components such as diaphragms, nozzles, and check valves, etc.
- Failures caused by outside influence. Conditions considered to be outside influence include, but are not limited to, weather, storage practices, contamination, use of unapproved fuels, coolants, lubricants, additives, fertilizers, water, or chemicals, etc.
- Failure or performance issues due to the use of fuels (e.g. gasoline, diesel, or biodiesel) that do not conform to their respective industry standards.
- Normal noise, vibration, wear and tear, and deterioration.
- Normal "wear and tear" includes, but is not limited to, damage to seats due to wear or abrasion, worn painted surfaces, scratched decals or windows, etc.

Parts

Parts scheduled for replacement as required maintenance are warranted for the period of time up to the scheduled replacement time for that part. Parts replaced under this warranty are covered for the duration of the original product warranty and become the property of Toro. Toro will make the final decision whether to repair any existing part or assembly or replace it. Toro may use remanufactured parts for warranty repairs.

Deep Cycle and Lithium-Ion Battery Warranty:

Deep cycle and Lithium-Ion batteries have a specified total number of kilowatt-hours they can deliver during their lifetime. Operating, recharging, and maintenance techniques can extend or reduce total battery life. As the batteries in this product are consumed, the amount of useful work between charging intervals will slowly decrease until the battery is completely worn out. Replacement of worn out batteries, due to normal consumption, is the responsibility of the product owner. Battery replacement may be required during the normal product warranty period at owner's expense. Note: (Lithium-Ion battery only): A Lithium-Ion battery has a part only prorated warranty beginning year 3 through year 5 based on the time in service and kilowatt hours used. Refer to the *Operator's Manual* for additional information.

Maintenance is at Owner's Expense

Engine tune-up, lubrication, cleaning and polishing, replacement of filters, coolant, and completing recommended maintenance are some of the normal services Toro products require that are at the owner's expense.

General Conditions

Repair by an Authorized Toro Distributor or Dealer is your sole remedy under this warranty.

Neither The Toro Company nor Toro Warranty Company is liable for indirect, incidental or consequential damages in connection with the use of the Toro Products covered by this warranty, including any cost or expense of providing substitute equipment or service during reasonable periods of malfunction or non-use pending completion of repairs under this warranty. Except for the Emissions warranty referenced below, if applicable, there is no other express warranty. All implied warranties of merchantability and fitness for use are limited to the duration of this express warranty.

Some states do not allow exclusions of incidental or consequential damages, or limitations on how long an implied warranty lasts, so the above exclusions and limitations may not apply to you. This warranty gives you specific legal rights, and you may also have other rights which vary from state to state.

Note regarding engine warranty:

The Emissions Control System on your Product may be covered by a separate warranty meeting requirements established by the U.S. Environmental Protection Agency (EPA) and/or the California Air Resources Board (CARB). The hour limitations set forth above do not apply to the Emissions Control System Warranty. Refer to the Engine Emission Control Warranty Statement supplied with your product or contained in the engine manufacturer's documentation for details

Countries Other than the United States or Canada

Customers who have purchased Toro products exported from the United States or Canada should contact their Toro Distributor (Dealer) to obtain guarantee policies for your country, province, or state. If for any reason you are dissatisfied with your Distributor's service or have difficulty obtaining guarantee information, contact the Toro importer.

374-0253 Rev D