Form No. 3408-798 Rev C

TORO®

Count on it.

Parts Catalog

Power Plex™ 40V MAX

Cordless Axial Blower

Model No. 51134—Serial No. 317000001 and Up

Register at www.Toro.com.
Original Instructions (EN)

CE

3408-798 C

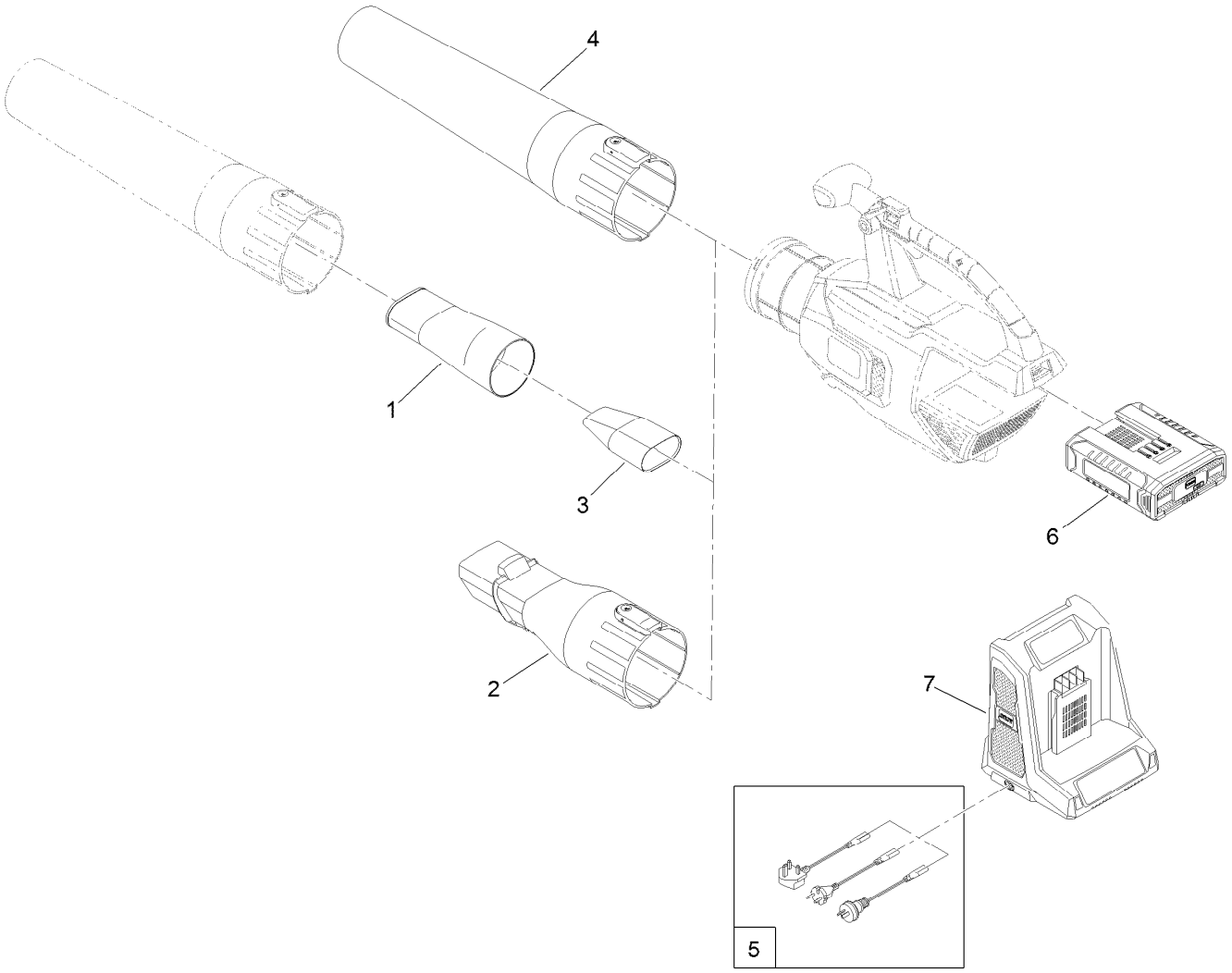

Cordless Axial Blower Assembly

Ref.	*Part Number*	*Qty.*	*Description*
1	132-6682	1	Adapter-Oscillator, MPH
2	133-8504	1	Adapter-Cleaner, Gutter
3	133-8506	1	Adapter-Insert, MPH
4	136-2561	1	Tube-Blower
5	136-2586	1	Cord Set
6	88525	1	Battery-40V Max
7	88527	1	Charger-Battery, 40V Max

Attachments and Accessories

For 51134 Power Plex 40V MAX Cordless Axial Blower

Product Name	Model/Part
33cm 40V MAX Cordless Single-Line String Trimmer	51130T
36cm 40V MAX Cordless Dual-Line String Trimmer	51132T
40V MAX Cordless Axial Blower	51134T
61cm 40V MAX Cordless Hedge Trimmer	51136T
35cm 40V MAX Cordless Chainsaw	51138T
Gutter Cleaner Kit	51667
Turbo Clear Oscillating Tube	51764
40V MAX Li-Ion Standard Battery	88525
40V MAX Li-Ion Extended Range Battery	88526
40V MAX Battery Charger	88527



Count on it.