Form No. 3368-518 Rev B

TORO®

Count on it.

Parts Catalog

11-Blade DPA Cutting Unit with 5in Reel

Reelmaster® 5210/5410 Series Traction Unit

Model No. 03695—Serial No. 311000001 and Up

Register at www.Toro.com.
Original Instructions (EN)

CE

3368-518 B

Ordering Replacement Parts

To order replacement parts, please supply the part number, the quantity, and the description of each part desired.

Understanding Reference Numbers

Each identified part in an illustration has a reference number. The reference number for a part also appears in the parts list, along with other information about the part.

This catalog uses two special reference number formats, one to indicate parts in a service assembly and another to indicate the quantity of a given part in an illustration.

Service Assembly Reference Numbers

Parts in service assemblies have reference numbers in the form a:b. The a represents the reference number of the entire service assembly and the b represents a sequential number unique to each part within the service assembly.

For example, a wheel assembly might be identified by reference number 6, the tire by 6:1, the valve by 6:2, and the wheel by 6:3. When you order the assembly identified by reference number 6, you receive all parts identified by reference numbers 6:1,6:2, and 6:3. However, you may also order any part individually. Reference numbers of this type appear in illustration and in parts lists.

Reference Numbers Indicating Quantity

In an illustration, if a reference number indicates more than one part, the reference number has the form nX y. The n represents the quantity of the part, the X is the multiplication symbol, and the y represents the reference number.

For example, in an illustration, the reference number 2X 37 means that two of the parts identified by reference number 37 are indicated.

Contents

Frame Assembly 4
Reel and Bedbar Assembly 5
Roller Assembly 7
Optional 2.5 Inch Diameter Long Roller Assembly No. 114-5404 8
2.5 Inch Diameter Short Roller Assembly No. 114-5406 9
Plastic Wiehle Roller Assembly No. 114-5400 10
Optional 3 Inch Diameter Full Front Roller Assembly No. 114-5412 11
Optional Plastic Shoulder Roller Assembly No. 114-5421 12
Optional High Height-of-Cut Assembly No. 110-9600 13
Shield Assembly 14
Optional Gauge Bar, Brush, Reel Drive Adapter and Roller Rebuild Tool Kit Assembly 15
Attachments and Accessories 16

© 2017—The Toro® Company
8111 Lyndale Avenue South
Bloomington, MN 55420

Contact us at www.Toro.com.
Printed in the USA.
All Rights Reserved

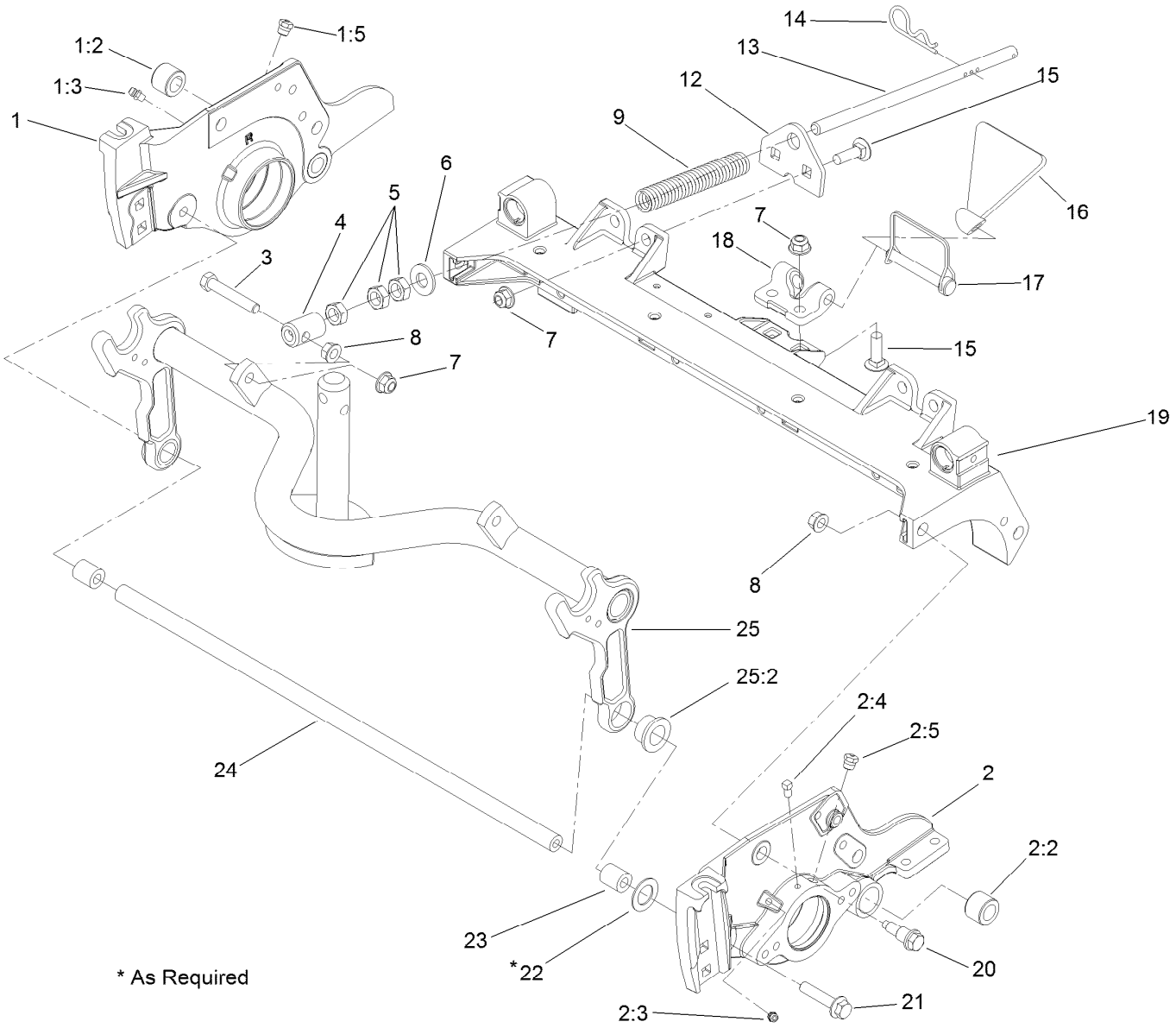

Frame Assembly

Ref.	Part Number	Qty.	Description
1	108-9081	1	RH Side Plate ASM
1:2	106-9618	1	Bushing-Rubber
1:3	302-5	1	Fitting-Grease
1:5	302-39	1	Fitting-Plug
2	108-9080	1	LH Side Plate ASM
2:2	106-9618	1	Bushing-Rubber
2:3	302-5	1	Fitting-Grease
2:4	106-4214	1	Setscrew-SQH
2:5	302-39	1	Fitting-Plug
3	104-3396	1	Screw-HH
4	99-8662	1	Tube-Spring
5	3218-5	3	Nut-Jam
6	87-7270	1	Washer-Thrust
7	104-8301	5	Nut-HF, NI
8	3290-357	5	Nut-HHF, Whiz
9	108-9084	1	Spring-Compression

Ref.	Part Number	Qty.	Description
12	110-4069	1	Bracket
13	107-2970	1	Rod
14	92-2762	1	Pin-Hair
15	3231-25	4	Bolt-CARR
16	119-8010-03	1	Kickstand
17	107-7400	1	Pin-Snapper
18	110-4058	1	Bracket-Chain
19	107-2951	1	Frame
20	107-2979	4	Bolt-Shoulder
21	3234-19	2	Screw-HHF
22	67-9410	1	Washer
23	108-4279	2	Spacer-Frame
24	108-4284	1	Tube-Support
25	106-3937	1	Carrier Frame ASM
25:2	93-2877	2	Bushing

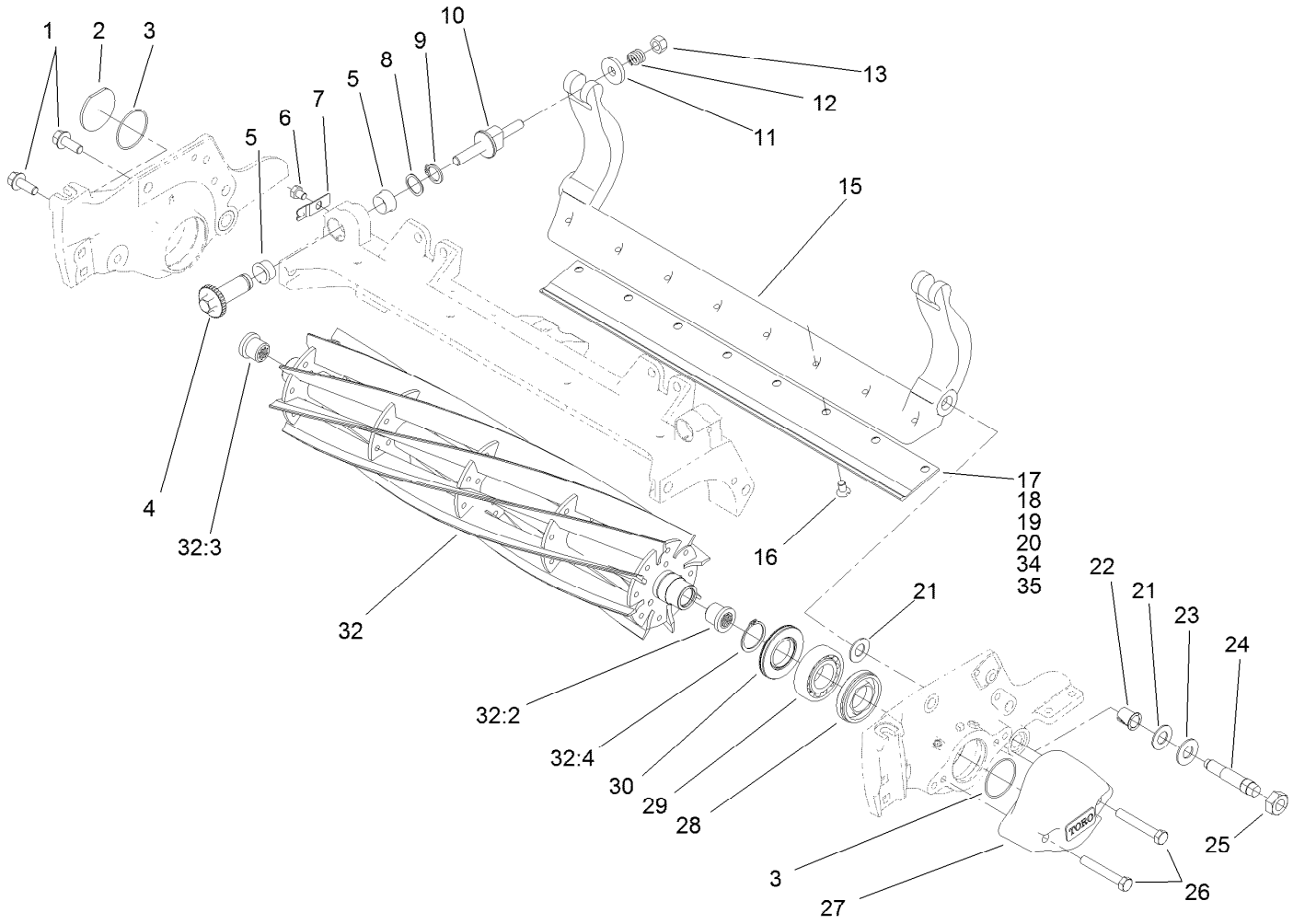

Reel and Bedbar Assembly

Ref.	Part Number	Qty.	Description
1	3234-11	2	Screw-HHF
2	2410-30	1	Cap-Plastic
3	237-68	2	O-Ring
4	106-5363	2	Shaft-Adjuster
5	106-5344	4	Bushing-Flange, Keyed
6	114-9396	2	Capscrew-HH
7	99-2097	2	Detent
8	106-5335	2	Washer-Wave
9	32120-93	2	Ring-Retaining
10	99-2096	2	Screw-Adjuster, Bedbar
11	99-2098	2	Washer
12	99-3755	2	Spring-Compression
13	33025-00	2	Nut-Lock, NI
15	105-8095-01	1	Bedbar-Fairway
16	57-4910	8	Screw-Special
17	108-9095	1	Bedknife-Edgemax (Fairway)
18	108-9096	1	Bedknife-STD (Fairway) ●
19	110-4084	1	Bedknife-Low HOC (Fairway) ●
20	110-4074	1	Bedknife-HD (Fairway) ●
21	61-1950	4	Washer-Plastic
22	56-9520	2	Bushing-Flanged
23	69-8980	2	Washer
24	106-9623	2	Bolt-Bedbar
25	3296-33	2	Nut-Lock, NI
26	323-12	2	Screw-HH
27	108-9090-01	1	Weight-End
28	107-2954	1	Nut-Adjuster, Bearing
29	93-2489	2	Bearing
30	107-4028	2	Seal-Grease
32	117-3793	1	11 Blade Reel
32:2	105-8076	1	Insert-Threaded, LH
32:3	105-8075	1	Insert-Threaded, RH
32:4	92-2601	2	Ring-Retaining

● Optional Equipment

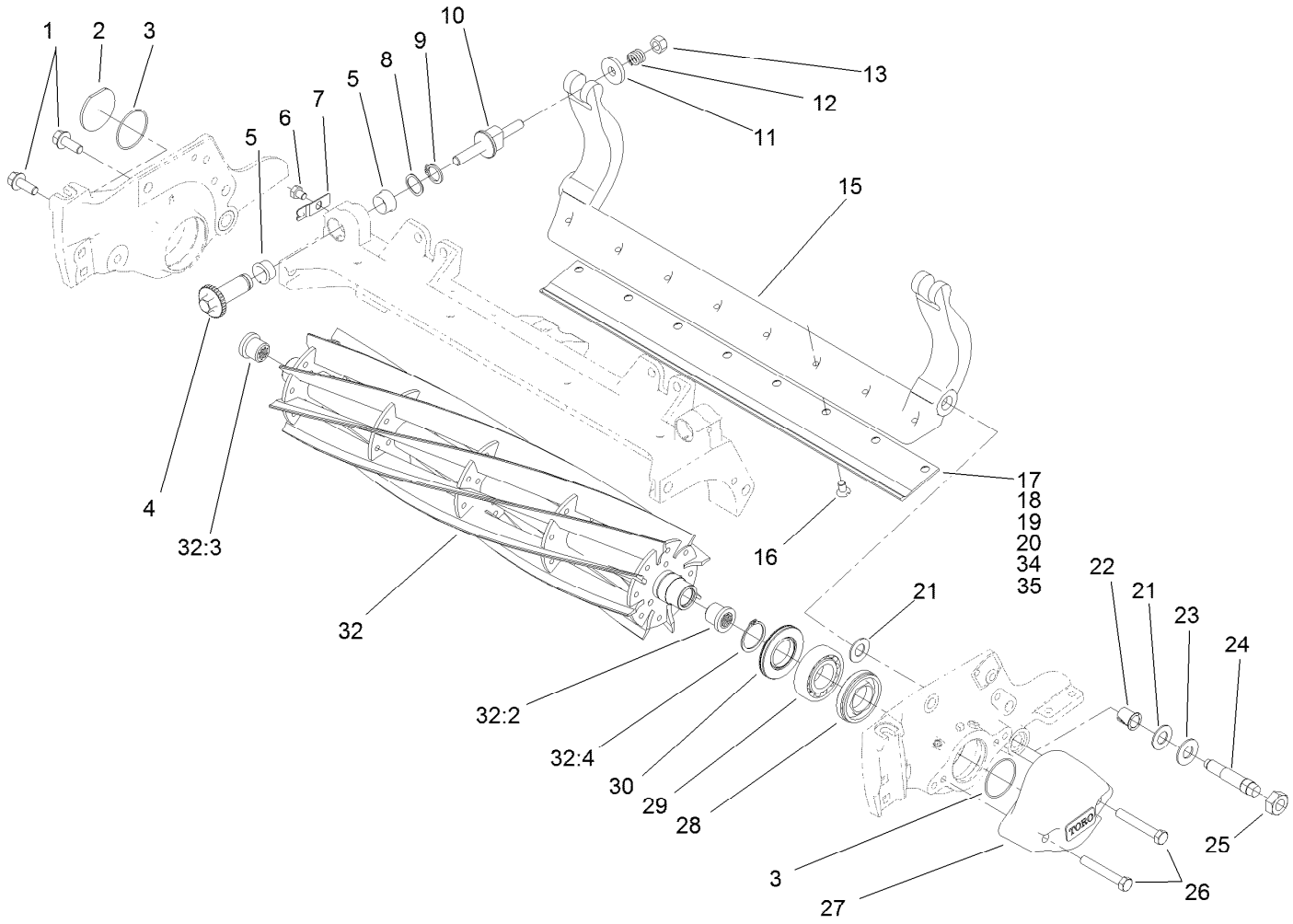

Reel and Bedbar Assembly (continued)

Ref.	*Part Number*	*Qty.*	*Description*
34	120-1640	1	Bedknife-Low HOC Extended, Fairway ●
35	119-4280	1	Bedknife-Edgemax Extended Low HOC, Fairw ●

● Optional Equipment

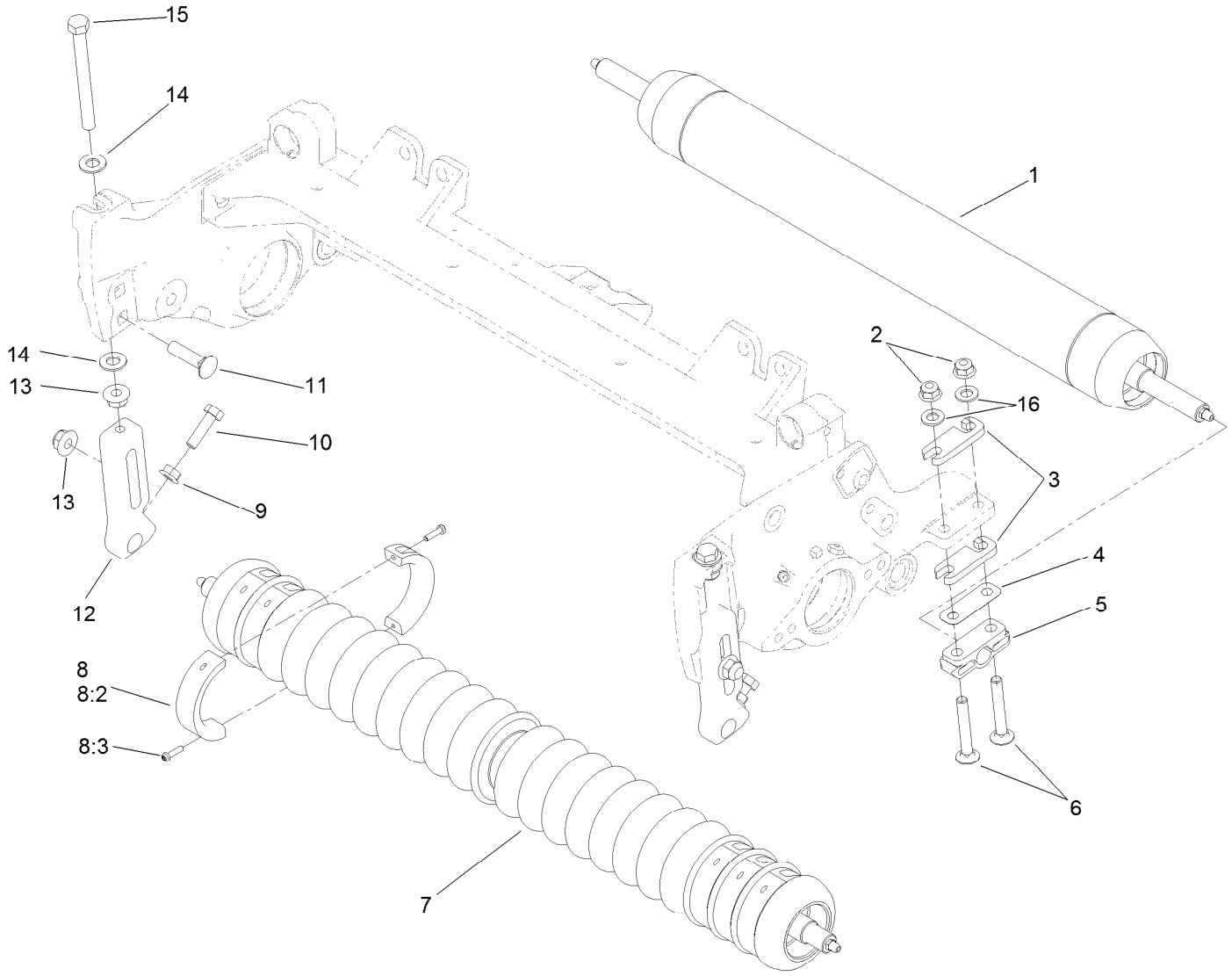

Roller Assembly

Ref.	Part Number	Qty.	Description
1	114-5404	1	Roller ASM (Long) ●■
1	114-5406	1	2.5 Inch DIA Roller ASM (Short)
2	104-8300	4	Nut-HF, NI
3	119-0626	4	Shim-Roller
4	107-4001	2	Shim-Roller (0.01 Inch) ■
5	106-3924	2	Bracket-Roller, Rear
6	3230-7	4	Bolt-CARR
7	114-5400	1	Plastic Wiehle Roller ASM
7	114-5412	1	3 Inch DIA Full Front Roller ASM ●■
7	114-5421	1	Plastic Shoulder Roller ASM ●■

Ref.	Part Number	Qty.	Description
8	104-8215	6	Collar Kit ■
8:2	100-4959	2	Collar
8:3	104-1835	2	Screw
9	32128-20	2	Nut-HF
10	322-16	2	Screw-HH
11	3231-4	2	Screw-CARR
12	107-2952	2	Bracket-HOC, Front
13	104-8301	4	Nut-HF, NI
14	48-9220	4	Washer-Plain
15	107-4026	2	Screw-HH
16	94-6936	4	Washer-Hardened
50	110-9600	1	DPA High HOC Kit ●■

● Not illustrated

■ Optional Equipment

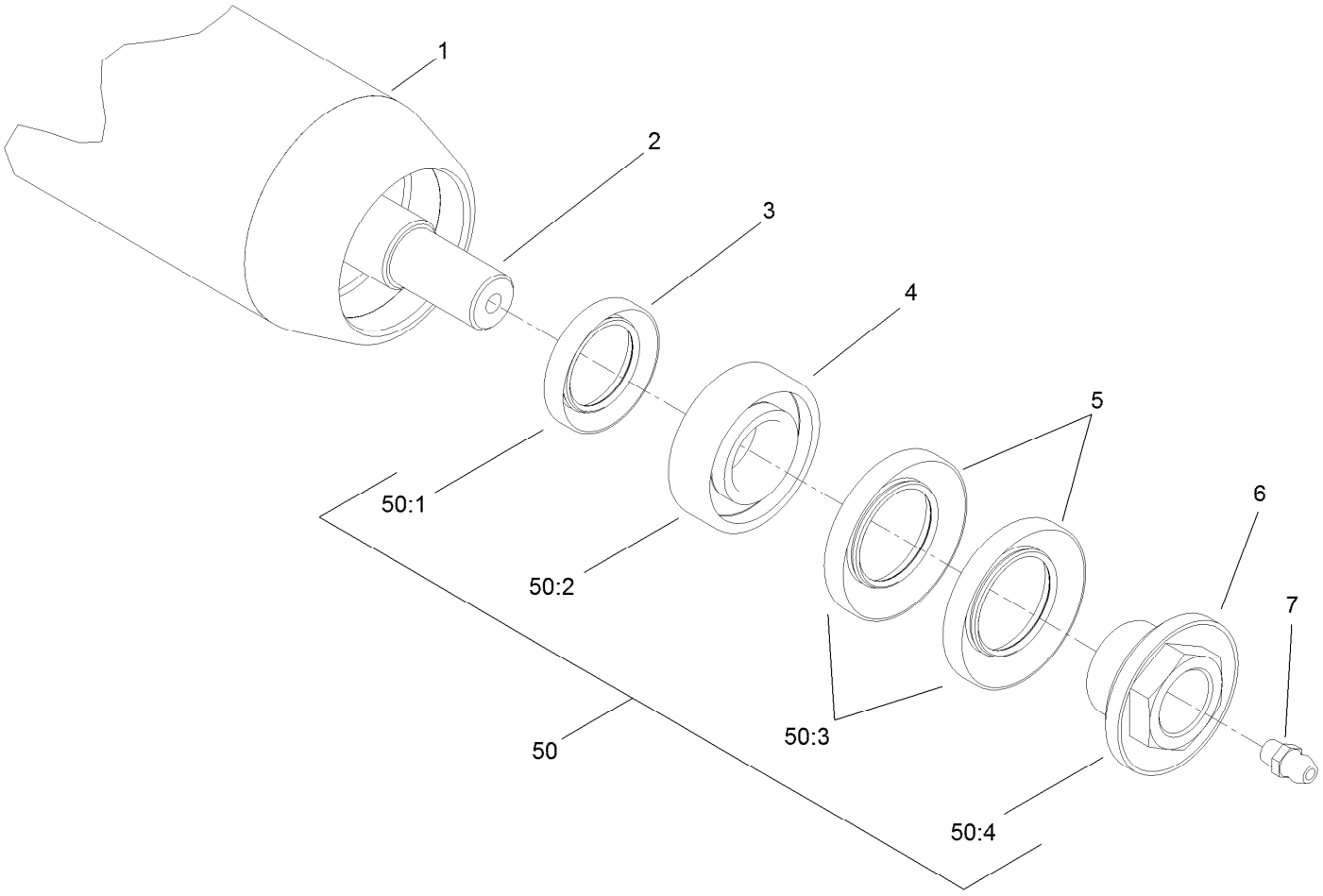

Optional 2.5 Inch Diameter Long Roller Assembly No. 114-5404

Ref.	*Part Number*	*Qty.*	*Description*
1	115-8294-03	1	Tube-Roller (Long)
2	114-5407	1	Shaft-Long, Rear Roller
3	114-3717	2	Seal-Oil
4	112-5290	2	Bearing-Steel, Stainless
5	112-7494	4	Seal
6	114-5411	2	Nut-Lock, Bearing
7	302-5	2	Fitting-Grease
50	114-5430	1	Roller Rebuild Kit
50:1	114-3717	2	Seal-Oil
50:2	112-5290	2	Bearing-Steel, Stainless
50:3	112-7494	4	Seal
50:4	114-5411	2	Nut-Lock, Bearing

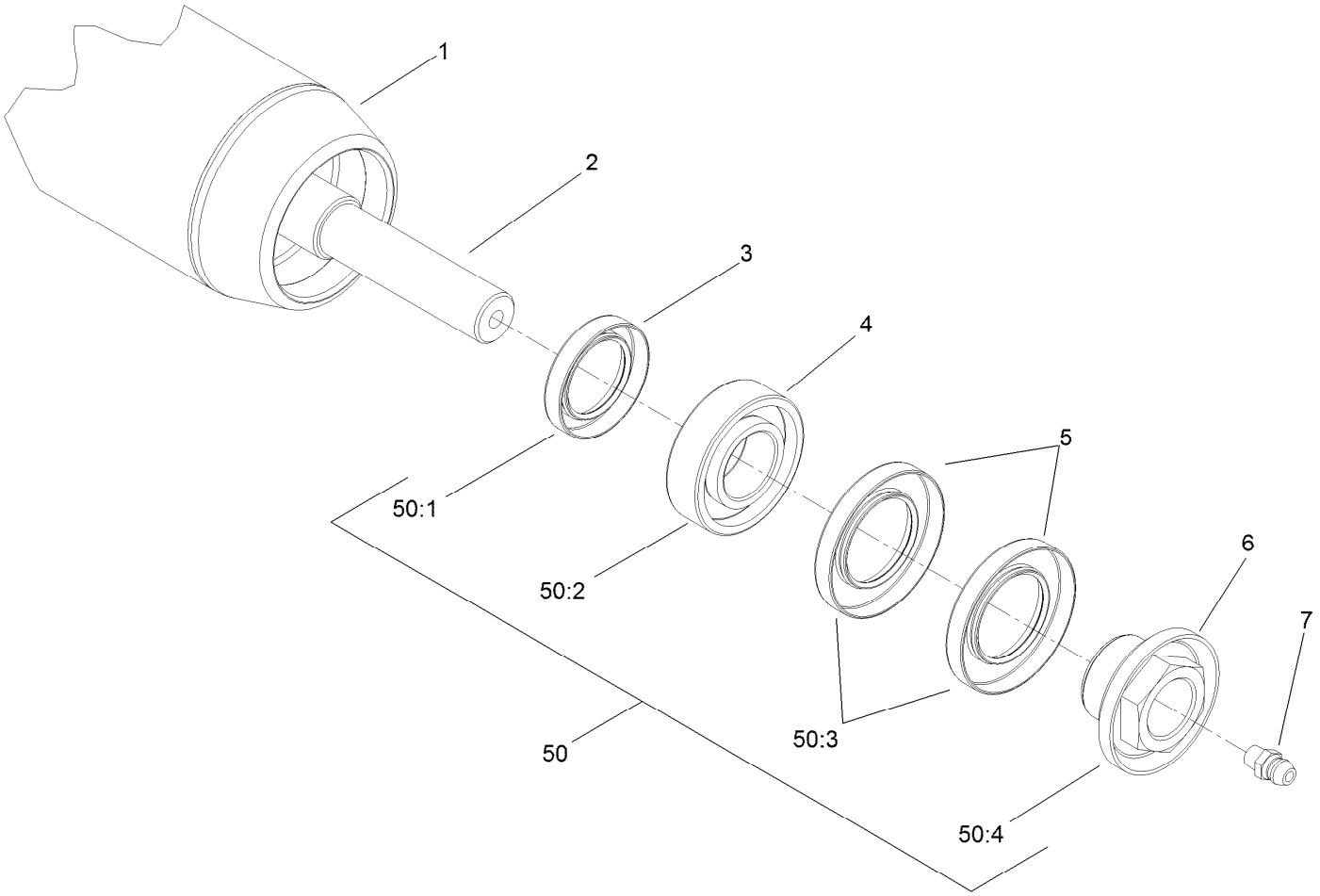

2.5 Inch Diameter Short Roller Assembly No. 114-5406

Ref.	*Part Number*	*Qty.*	*Description*
1	115-8293-03	1	Tube-Roller, 2.5 Inch DIA (Short)
2	114-5410	1	Shaft-Short, Rear Roller
3	114-3717	2	Seal-Oil
4	112-5290	2	Bearing-Steel, Stainless
5	112-7494	4	Seal
6	114-5411	2	Nut-Lock, Bearing
7	302-5	2	Fitting-Grease
50	114-5430	1	Roller Rebuild Kit
50:1	114-3717	2	Seal-Oil
50:2	112-5290	2	Bearing-Steel, Stainless
50:3	112-7494	4	Seal
50:4	114-5411	2	Nut-Lock, Bearing

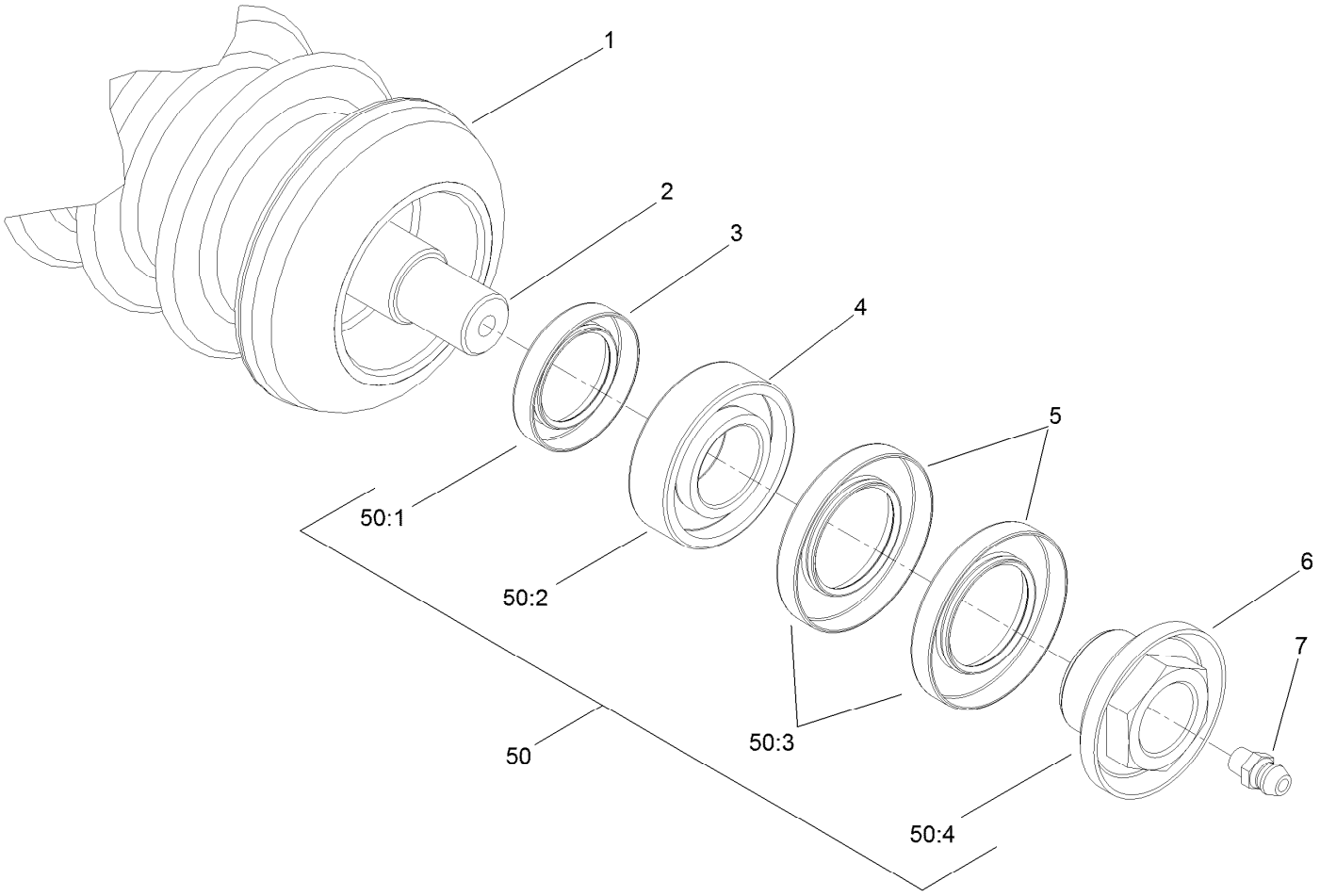

Plastic Wiehle Roller Assembly No. 114-5400

Ref.	*Part Number*	*Qty.*	*Description*
1	114-5401	1	Roller-Wiehle, Plastic
2	114-5403	1	Shaft-Roller, Front
3	114-3717	2	Seal-Oil
4	112-5290	2	Bearing-Steel, Stainless
5	112-7494	4	Seal
6	114-5411	2	Nut-Lock, Bearing
7	302-5	2	Fitting-Grease
50	114-5430	1	Roller Rebuild Kit
50:1	114-3717	2	Seal-Oil
50:2	112-5290	2	Bearing-Steel, Stainless
50:3	112-7494	4	Seal
50:4	114-5411	2	Nut-Lock, Bearing

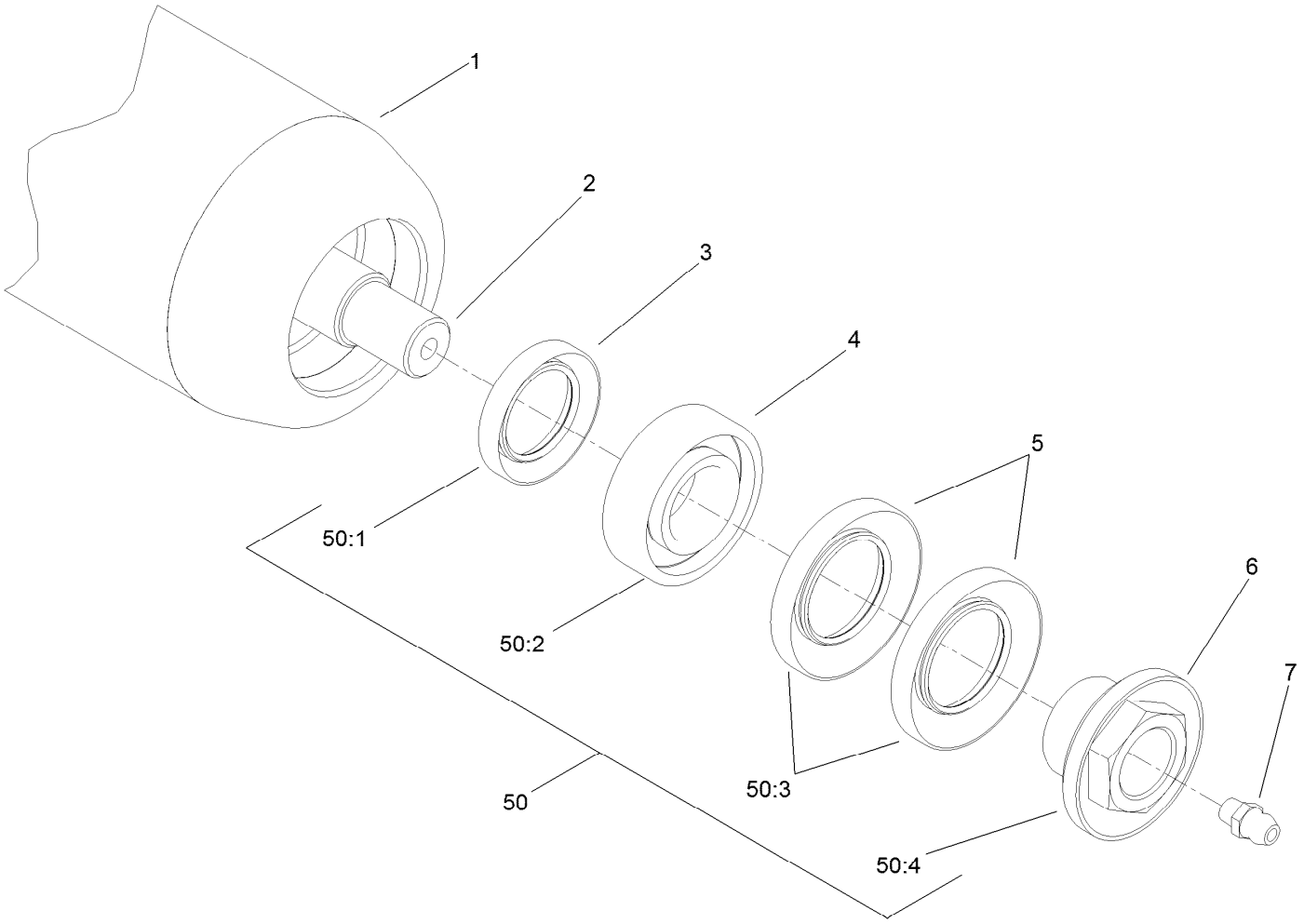

Optional 3 Inch Diameter Full Front Roller Assembly No. 114-5412

Ref.	*Part Number*	*Qty.*	*Description*
1	115-8297-03	1	Tube-Roller, Full
2	114-5403	1	Shaft-Roller, Front
3	114-3717	2	Seal-Oil
4	112-5290	2	Bearing-Steel, Stainless
5	112-7494	4	Seal
6	114-5411	2	Nut-Lock, Bearing
7	302-5	2	Fitting-Grease
50	114-5430	1	Roller Rebuild Kit
50:1	114-3717	2	Seal-Oil
50:2	112-5290	2	Bearing-Steel, Stainless
50:3	112-7494	4	Seal
50:4	114-5411	2	Nut-Lock, Bearing

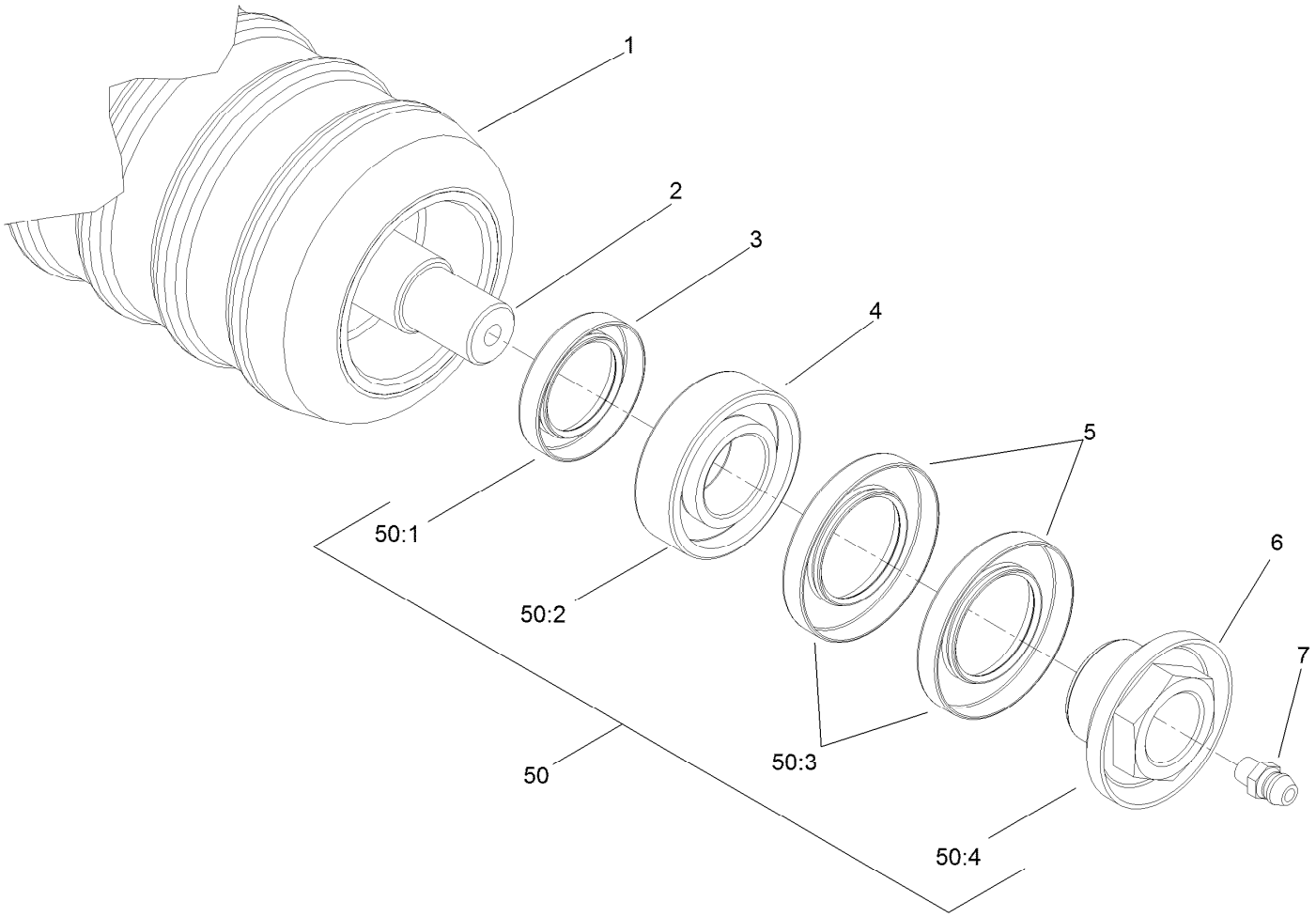

Optional Plastic Shoulder Roller Assembly No. 114-5421

Ref.	*Part Number*	*Qty.*	*Description*
1	114-5422	1	Roller-Shoulder, Plastic
2	114-5403	1	Shaft-Roller, Front
3	114-3717	2	Seal-Oil
4	112-5290	2	Bearing-Steel, Stainless
5	112-7494	4	Seal
6	114-5411	2	Nut-Lock, Bearing
7	302-5	2	Fitting-Grease
50	114-5430	1	Roller Rebuild Kit
50:1	114-3717	2	Seal-Oil
50:2	112-5290	2	Bearing-Steel, Stainless
50:3	112-7494	4	Seal
50:4	114-5411	2	Nut-Lock, Bearing

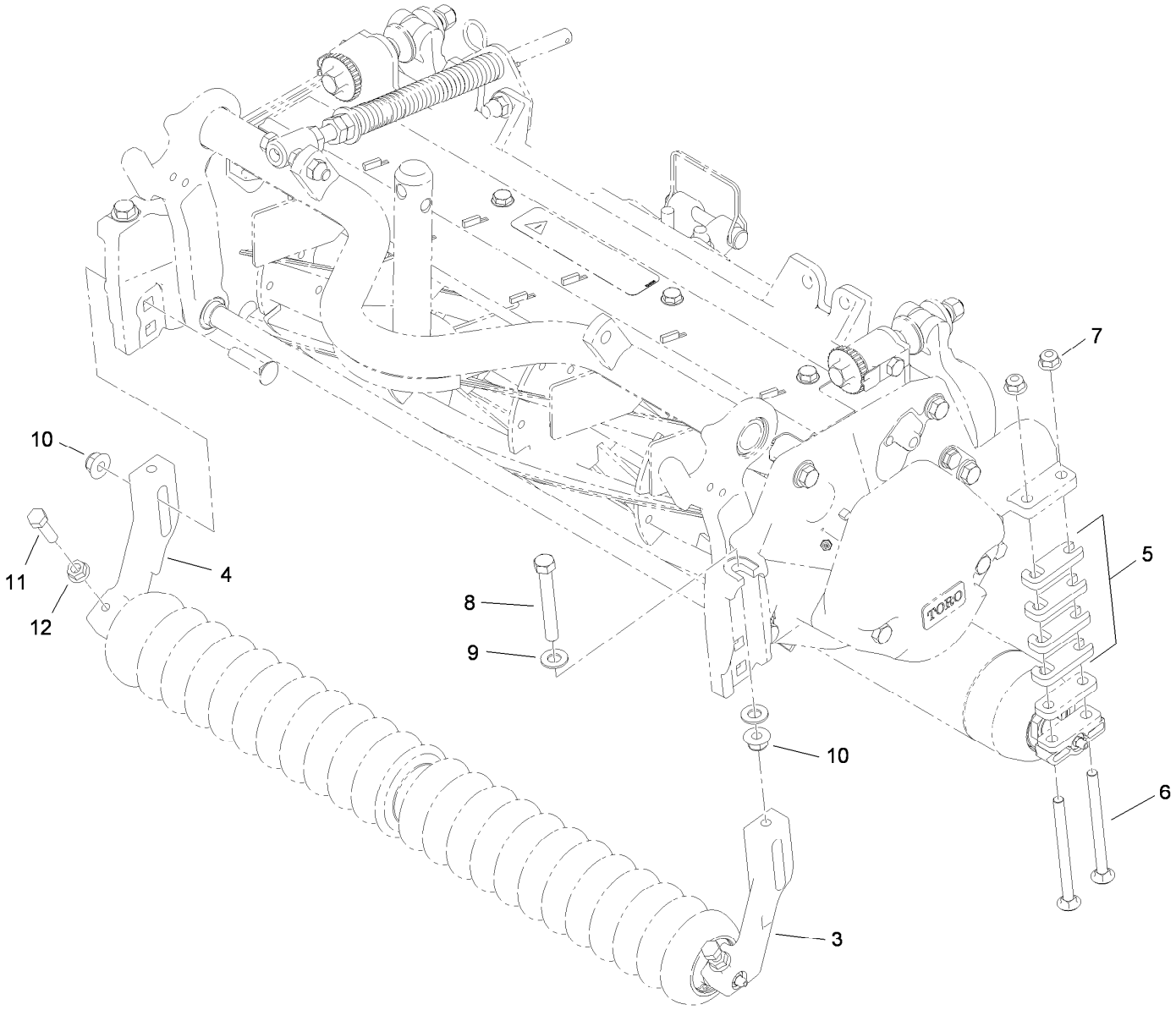

Optional High Height-of-Cut Assembly No. 110-9600

Ref.	*Part Number*	*Qty.*	*Description*
3	120-0404	1	Bracket-High HOC, LH
4	120-0405	1	Bracket-High HOC, RH
5	119-0626	8	Shim-Roller
6	106-9758	4	Screw-CARR
6	3230-30	4	Screw-CARR ●
7	104-8300	4	Nut-HF, NI
8	112-7451	2	Screw-TAP
9	48-9220	4	Washer-Plain
10	104-8301	4	Nut-HF, NI
11	322-16	2	Screw-HH
12	32128-20	2	Nut-HF

● Optional Equipment

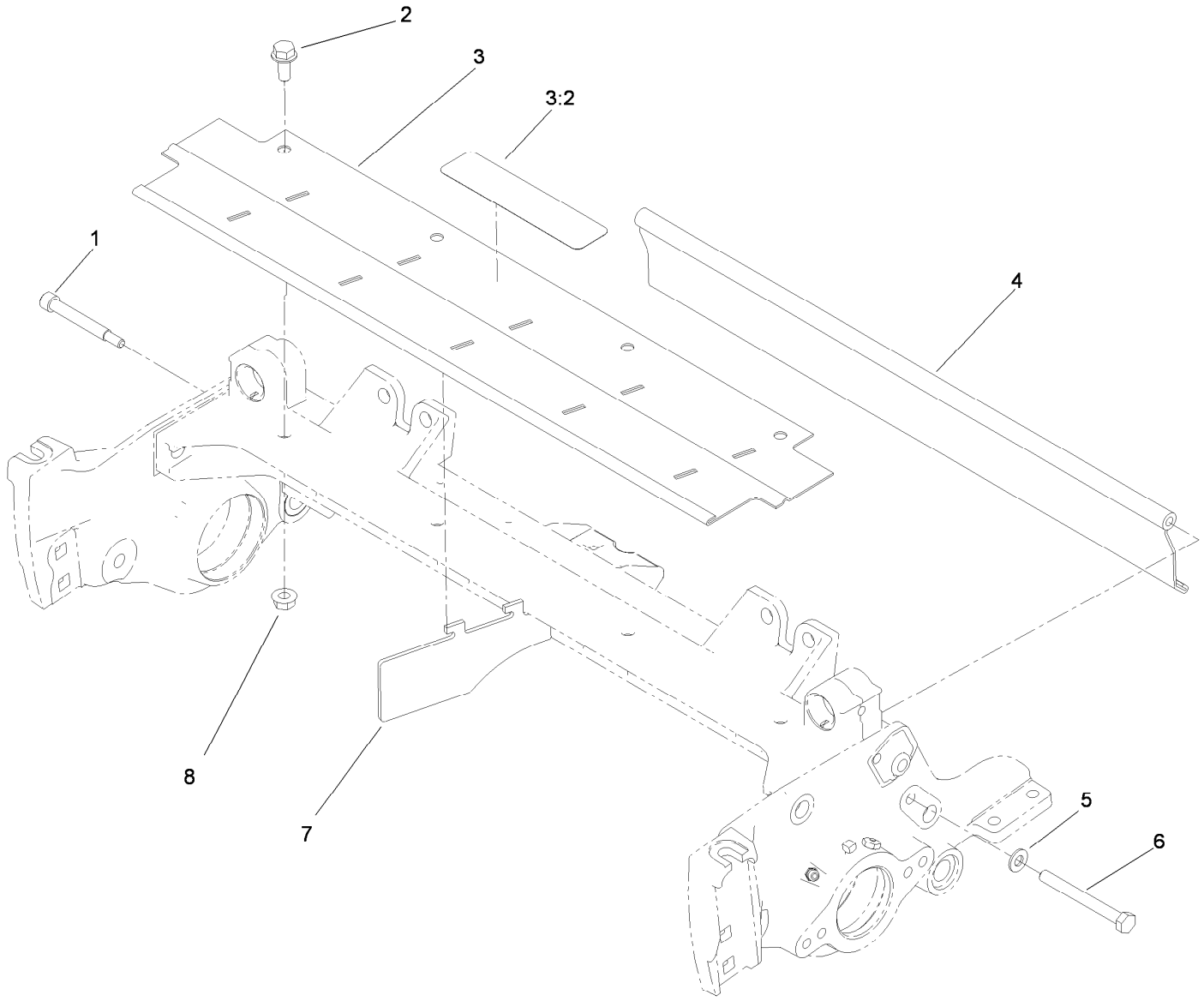

Shield Assembly

Ref.	*Part Number*	*Qty.*	*Description*
1	107-7773	1	Screw-HSH
2	3234-7	4	Screw-HHF
3	107-2996	1	Front Grass Shield ASM
3:2	93-6688	1	Decal-Danger
4	107-7777-01	1	Rear Shield ASM
5	3256-74	1	Washer-Flat
6	322-14	1	Screw-HH
7	110-1706	5	Deflector
8	32128-20	4	Nut-HF

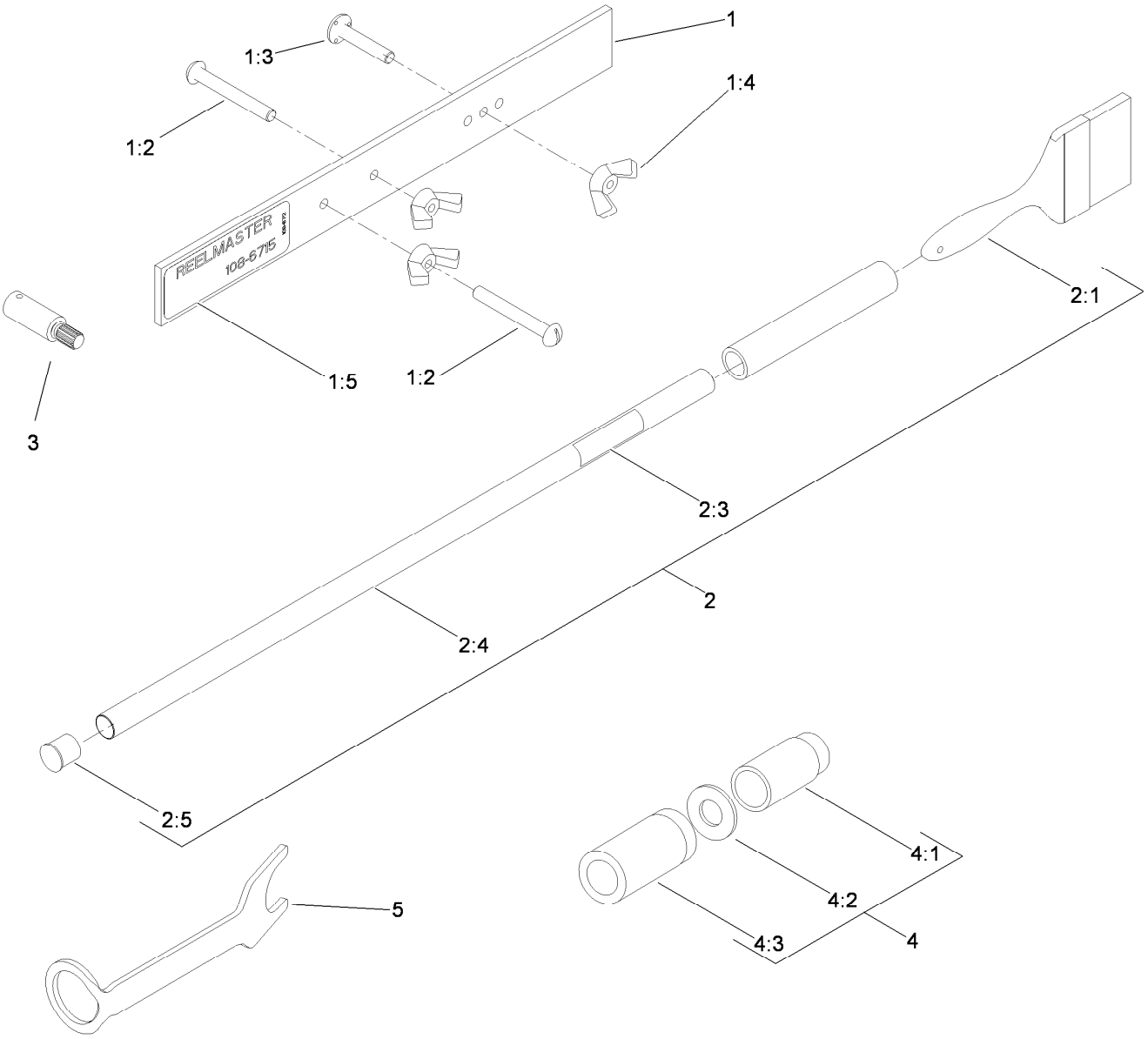

Optional Gauge Bar, Brush, Reel Drive Adapter and Roller Rebuild Tool Kit Assembly

Ref.	Part Number	Qty.	Description
1	108-6715	1	Gauge Bar ASM
1:2	32122-54	2	Screw-Head, Truss
1:3	108-6714	1	Stud-Weld
1:4	32103-3	3	Nut-Wing
1:5	108-6712	1	Decal-Gauge, Bar
2	29-9100	1	Brush And Handle ASM
2:1	36-4310	1	Brush
2:3	98-3206	1	Decal
2:4	29-9080	1	Handle

Ref.	Part Number	Qty.	Description
2:5	2410-18	1	Cap-Plastic
3	TOR4112	1	Adapter-Drive, Reel ●
4	115-0803	1	Roller Rebuild Tool Kit
4:1	115-0852	1	Tool-Inner Seal
4:2	107-8133	1	Washer-Flat
4:3	115-0853	1	Tool-Bearing/Outer Seals
5	117-0975	1	Tool-Installation, Reel Bearing

● Obtain directly from K-Line Industries, Inc. (800) 241-0936

Attachments and Accessories

For 03695 11-Blade DPA Cutting Unit with 5in Reel Reelmaster 5210/5410 Series Traction Unit

Product Name	Model/Part
5 Inch Verticutter	03664
5 Inch Left-Hand Groomer Kit	03666
5 Inch Right-Hand Groomer Kit	03665
Rear Roller Brush Kit	03668
Basket Kit	03662
Rear Lift Cylinder Limit Kit	110-9604
5 Inch Fairway Reel, (22 Inch) 5 Blade	127-2070
Rear Roller Scraper Kit	107-3280
Wiehle Scraper ASM	107-2993-03
Comb/Scraper Kit	110-1735
3 Inch Dia Full Front Roller ASM	114-5412
3 Inch Full Front Roller Scraper	110-9602-03
Plastic Shoulder Roller ASM	114-5421
Shoulder Roller Scraper ASM	110-9609-03
High Height-of-Cut Kit	110-9600
3 Inch Dia Collar Kit	104-8215
Cutting Unit Kickstand	119-8010-03
Reel Drive Adapter (Obtain directly from K-Line Industries, Inc. (800) 241-0936)	TOR4112
Roller Rebuild Tool Kit	115-0803
Reel Bearing Installation Tool	117-0975
Fairway Broomer Kit	110-4085
Brush-Roller (High Height-Of-Cut)	110-1740
Gauge Bar Assembly	108-6715
Roller Rebuild Kit	114-5430
Groomer/RRB Bearing and Seal Kit	110-4086
Heavy-Duty DPA MVP Kit	120-7230
Rear Roller Adjustment Kit	125-0570
Bedknife-Edgemax (Fairway)	108-9095
Bedknife-STD (Fairway)	108-9096
Bedknife-Low HOC (Fairway)	110-4084
Bedknife-Lowcut Extended (Fairway)	120-1640
Bedknife-HD (Fairway)	110-4074
Bedknife Edgemax Low cut Extended (Fairway)	119-4280
Bednife-Premium, Low HOC	125-2771
Bedknife-Edgemax Lowcut	127-7132
Toro Reel Paper (10 Pack)	125-5610
Toro Reel Shim (0.002in)	125-5611
Angle Indicator	131-6828
Angle Indicator Mount	131-6829
EdgeSeris 5 Inch Fairway (22 Inch) 11 Blade Forward Swept Reel	133-8203

Notes:

Notes:

Notes:



Count on it.