Form No. 3404-369 Rev C

TORO®

Count on it.

Operator's Manual

Greensmaster® Flex™ 1820 and 2120 Traction Unit

Model No. 04044—Serial No. 316000001 and Up
Model No. 04045—Serial No. 316000001 and Up

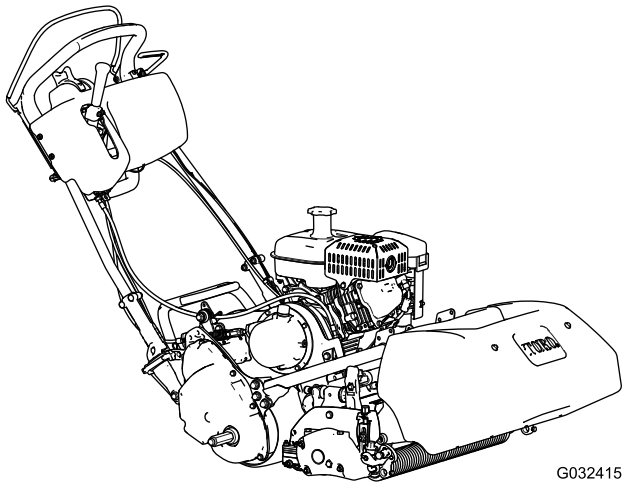

G032415

Register at www.Toro.com.
Original Instructions (EN)

CE

3404-369 C

This product complies with all relevant European directives; for details, please see the separate product specific Declaration of Conformity (DOC) sheet.

⚠ WARNING

CALIFORNIA
Proposition 65 Warning

This product contains a chemical or chemicals known to the State of California to cause cancer, birth defects, or reproductive harm.

The engine exhaust from this product contains chemicals known to the State of California to cause cancer, birth defects, or other reproductive harm.

It is a violation of California Public Resource Code Section 4442 or 4443 to use or operate the engine on any forest-covered, brush-covered, or grass-covered land unless the engine is equipped with a spark arrester, as defined in Section 4442, maintained in effective working order or the engine is constructed, equipped, and maintained for the prevention of fire.

This spark ignition system complies with Canadian ICES-002.

Operating this machine between 1,524 to 2,438 m (5,000 to 8,000 ft) above sea level requires the high-altitude kit. See your Authorized Toro Dealer.

Introduction

This machine is a walk-behind, reel-blade lawn mower intended to be used by professional, hired operators in commercial applications. It is primarily designed for cutting grass on well-maintained lawns in parks, golf courses, sports fields, and on commercial grounds. It is not designed for cutting brush, mowing grass and other growth alongside highways, or for agricultural uses.

Read this information carefully to learn how to operate and maintain your product properly and to avoid injury and product damage. You are responsible for operating the product properly and safely.

You may contact Toro directly at www.Toro.com for product safety and operation training materials, accessory information, help finding a dealer, or to register your product.

Whenever you need service, genuine Toro parts, or additional information, contact an Authorized Service Dealer or Toro Customer Service and have the model and serial numbers of your product ready. Figure 1 identifies the location of the model and serial numbers on the product. Write the numbers in the space provided.

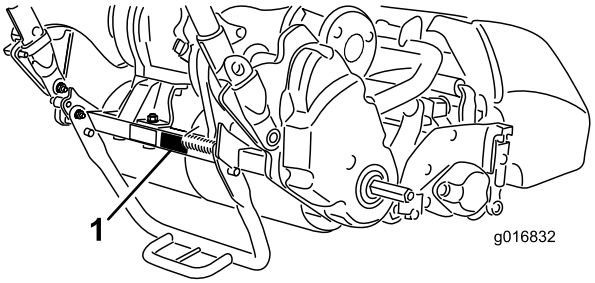

g016832

Figure 1

1. Location of the model and serial numbers-Traction unit

Model No. _____

Serial No. _____

This manual identifies potential hazards and has safety messages identified by the safety-alert symbol (Figure 2), which signals a hazard that may cause serious injury or death if you do not follow the recommended precautions.



g000502

Figure 2

1. Safety-alert symbol.

This manual uses 2 words to highlight information. **Important** calls attention to special mechanical information and **Note** emphasizes general information worthy of special attention.

© 2017—The Toro® Company
8111 Lyndale Avenue South
Bloomington, MN 55420

Contact us at www.Toro.com.
Printed in the USA
All Rights Reserved

Contents

Safety 4
Safe Operating Practices 4
Toro Mower Safety 5
Sound Power Level 6
Sound Pressure Level 6
Vibration Level 6
Safety and Instructional Decals 7
Setup 9
1 Preparing the Traction Unit 10
2 Installing the Cutting Unit to the Traction Unit 10
3 Installing the Handle Retainers 11
4 Installing the Transport Wheels 11
5 Checking the Engine-Oil Level 12
6 Installing the Grass Basket 12
Product Overview 14
Controls 14
Specifications 18
Attachments/Accessories 18
Operation 18
Think Safety First 18
Checking the Engine-Oil Level 18
Filling the Fuel Tank 18
Adjusting the Handle Height 20
Adjusting the Handle Angle 20
Adjusting the Throttle Control 20
Starting and Shutting Off the Engine 21
Transporting the Machine 21
Preparing to Mow 21
Mowing Tips 22
Checking the Operation of the Interlock Switches 23
Releasing the Transmission 24
Setting the Machine to Match Turf Conditions 25
Maintenance 26
Recommended Maintenance Schedule(s) 26
Daily Maintenance Checklist 27
Engine Maintenance 28
Servicing the Engine Oil 28
Servicing the Air Cleaner 29
Servicing the Spark Plug 30
Fuel System Maintenance 30
Cleaning the Fuel Cup and Fuel-Tank Screen 30
Replacing the Fuel Line 31
Electrical System Maintenance 31
Servicing the Traction Interlock Switch 31
Servicing the Brake-Interlock Switch 32
Brake Maintenance 32
Adjusting the Service/Parking Brake 32
Belt Maintenance 33
Inspecting the Reel-Drive Belt 33
Visually Inspecting the Reel Clutch 33
Engaging/Disengaging the Transmission-Belt Tensioner 34
Controls System Maintenance 34
Adjusting the Traction Control 34
Adjusting the Reel Control 35
Storage 36

Safety

This machine has been designed in accordance with EN ISO 5395:2013 and ANSI B71.4-2012.

Improper use or maintenance by the operator or owner can result in injury. To reduce the potential for injury, comply with these safety instructions and always pay attention to the safety-alert ⚠ symbol, which means Caution, Warning, or Danger—personal safety instruction. Failure to comply with the instruction may result in personal injury or death.

Hazard control and accident prevention are dependent upon the awareness, concern, and proper training of the personnel involved in the operation, transport, maintenance, and storage of the machine. Improper use or maintenance of the machine can result in injury or death. To reduce the potential for injury or death, comply with the following safety instructions.

Safe Operating Practices

Training

- Read the *Operator's Manual* and other training material carefully. Be familiar with the controls, safety signs, and the proper use of the equipment.
- Never allow children or people unfamiliar with these instructions to use or service the machine. Local regulations may restrict the age of the operator.
- Never mow while people, especially children, or pets are nearby.
- Keep in mind that the operator or user is responsible for accidents or hazards occurring to other people or their property.
- The owner/user can prevent and is responsible for accidents or injuries occurring to people, or damage to property.

Preparation

- While mowing, always wear substantial, slip-resistant footwear, long trousers, safety glasses, and ear protection. Tie back long hair. Do not wear jewelry.
- Thoroughly inspect the area where the equipment is to be used and remove all objects which the machine may throw.
- Warning—Fuel is highly flammable. Take the following precautions:
  - Store fuel in containers specifically designed for this purpose.
  - Refuel outdoors only and do not smoke while refuelling.
  - Add fuel before starting the engine. Never remove the cap of the fuel tank or add fuel while the engine is running or when the engine is hot.
  - If you spill fuel, do not attempt to start the engine but move the machine away from the spill and avoid creating any source of ignition until the fuel vapors have dissipated.
  - Replace all fuel tanks and container caps securely.
- Replace faulty silencers.
- Evaluate the terrain to determine what accessories and attachments are needed to properly and safely perform the job. Use only accessories and attachments approved by the manufacturer.
- Check that operator's presence controls, safety switches and shields are attached and functioning properly. Do not operate the machine unless they are functioning properly.

Operation

- Do not operate the engine in a confined space where dangerous carbon monoxide and other exhaust gasses can collect.
- Mow only in daylight or in good artificial light.
- Before attempting to start the engine, disengage all blade attachment clutches, shift into neutral, and engage the parking brake.
- Stay alert for holes in the terrain and other hidden hazards.
- Watch out for traffic when crossing or near roadways.
- Stop the blades rotating before crossing surfaces other than grass.
- When using any attachments, never direct discharge of material toward bystanders nor allow anyone near the machine while in operation.
- Never operate the machine with damaged guards, shields, or without safety protective devices in place. Be sure all interlocks are attached, adjusted properly, and functioning properly.
- Do not change the engine governor settings or overspeed the engine. Operating the engine at excessive speed may increase the hazard of personal injury.
- Shut off the engine and disengage the drive to the attachment:

  - Before leaving the operator's position
  - Before refuelling
  - Before removing the grass basket
  - Before making height adjustment unless adjustment can be made from the operator's position
  - Before clearing blockages
  - Before checking, cleaning, or working on the machine
  - After striking a foreign object or if an abnormal vibration occurs. Inspect the machine for damage and make repairs before restarting and operating the equipment.

  Disengage drive to attachments when transporting or not in use.
- Reduce the throttle setting before stopping engine and, if the engine is provided with a fuel shut-off valve, turn the valve off at the conclusion of mowing.
- Keep hands and feet away from the cutting unit.
- Slow down and use caution when making turns and crossing roads and sidewalks. Stop reels if not mowing.
- Do not operate the machine if you are ill, tired, or under the influence of alcohol or drugs
- Lightning can cause severe injury or death. If lightning is seen or thunder is heard in the area, do not operate the machine; seek shelter.
- Use care when loading or unloading the machine into a trailer or truck
- Use care when approaching blind corners, shrubs, trees, or other objects that may obscure vision.

Maintenance and Storage

- Keep all nuts, bolts and screws tight to be sure the equipment is in safe working condition.
- Never store the equipment with fuel in the tank inside a building where fumes may reach an open flame or spark.
- Allow the engine to cool before storing in any enclosure.
- To reduce the fire hazard, keep the engine, silencer, battery compartment, and fuel storage area free of grass, leaves, or excessive grease.
- Check the grass basket frequently for wear or deterioration.
- Keep all parts in good working condition and all hardware and hydraulic fittings tightened. Replace all worn or damaged parts and decals.
- If the fuel tank has to be drained, do this outdoors.
- Be careful during adjustment of the machine to prevent entrapment of the fingers between moving blades and fixed parts of the machine.
- Disengage drives, disengage the cutting unit, set the parking brake, shut off the engine, and disconnect the spark-plug wire. Wait for all movement to stop before adjusting, cleaning, or repairing.
- Clean grass and debris from the cutting unit, drives, mufflers, and the engine to help prevent fires. Clean up oil or fuel spillage.
- Carefully release pressure from components with stored energy.
- Disconnect the battery and remove the spark-plug wire before making any repairs. Disconnect the negative terminal first and the positive last. Reconnect the positive first and negative last.
- Use care when checking the reel. Wear gloves and use caution when servicing them.
- Keep hands and feet away from moving parts. If possible, do not make adjustments with the engine running.

Hauling

- Use care when loading or unloading the machine into a trailer or truck.
- Use full width ramps for loading machine into trailer or truck.
- Tie the machine down securely using straps, chains, cable, or ropes. Both front and rear straps should be directed down and outward from the machine.

Toro Mower Safety

The following list contains safety information specific to Toro products or other safety information that you must know that is not included in the CEN, ISO, or ANSI standard.

This product is capable of amputating hands and feet and throwing objects. Always follow all safety instructions to avoid serious injury or death.

Use of this product for purposes other than its intended use could prove dangerous to user and bystanders.

- Know how to shut off the engine quickly.
- Handle gasoline carefully. Wipe up any spills.
- Check the safety interlock switches daily for proper operation. If a switch should fail, replace the switch before operating the machine.
- Always stand behind the handle when starting and operating the machine.

- When near or crossing roads, always yield the right-of-way.
- The grass basket must be in place, during the mowing operation, for maximum safety. Shut the engine off before emptying the basket.
- Do not touch the engine, muffler, or exhaust pipe while the engine is running or soon after it has shut off because these areas could be hot enough to cause burns.
- When a person or pet appears unexpectedly in or near the mowing area, stop mowing. Careless operation, combined with terrain angles, ricochets, or improperly positioned guards can lead to thrown object injuries. Do not resume mowing until the area is cleared.

Maintenance and Storage

- Check all fuel lines for tightness and wear on a regular basis. Tighten or repair them as needed.
- If the engine must be running to perform a maintenance adjustment, keep hands, feet, clothing, and any parts of the body away from the cutting unit, attachments and any moving parts. Keep everyone away.
- To ensure safety and accuracy, have an Authorized Toro Distributor check the maximum engine speed with a tachometer. The maximum governed engine speed should be between 3,190 and 3,340 rpm.
- If major repairs are ever needed or if assistance is desired, contact an Authorized Toro Distributor.
- To ensure optimum performance and continued safety certification of the machine, use only genuine Toro replacement parts and accessories. Replacement parts and accessories made by other manufacturers could be dangerous, and such use could void the product warranty.

Sound Power Level

⚠ CAUTION

This machine produces sound levels that can cause hearing loss through extended periods of exposure.

Wear hearing protection when operating this machine.

- **Model 04044**

  This unit has a guaranteed sound power level of 96 dBA, which includes an Uncertainty Value (K) of 1 dBA.

  Sound power level was determined according to the procedures outlined in EN 11094.

- **Model 04045**

  This unit has a guaranteed sound power level of 95 dBA, which includes an Uncertainty Value (K) of 1 dBA.

  Sound power level was determined according to the procedures outlined in EN 11094.

Sound Pressure Level

- **Model 04044**

  This unit has a sound pressure level at the operator's ear of 84 dBA, which includes an Uncertainty Value (K) of 1 dBA.

  Sound pressure level was determined according to the procedures outlined in EN ISO 5395:2013.

- **Model 04045**

  This unit has a sound pressure level at the operator's ear of 87 dBA, which includes an Uncertainty Value (K) of 1 dBA.

  Sound pressure level was determined according to the procedures outlined in EN ISO 5395:2013.

Vibration Level

Hand-Arm

- **Model 04044**

  Measured vibration level for right hand = 2.86 m/s^2

  Measured vibration level for left hand = 3.24 m/s^2

  Uncertainty Value (K) = 1.6 m/s^2

- **Model 04045**

  Measured vibration level for right hand = 3.16 m/s^2

  Measured vibration level for left hand = 2.73 m/s^2

  Uncertainty Value (K) = 1.6 m/s^2

Measured values were determined according to the procedures outlined in EN ISO 5395:2013.

Safety and Instructional Decals

Safety decals and instructions are easily visible to the operator and are located near any area of potential danger. Replace any decal that is damaged or missing.



decal117-2718

117–2718

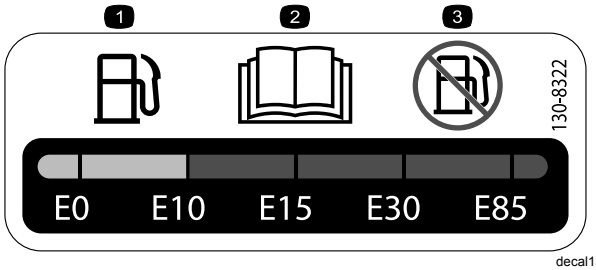

decal130-8322

130-8322

1. Only use gasoline that contains 10% ethanol by volume (E10) or less.
2. Read the *Operator's Manual*.
3. Do not use gasoline that contains more than 10% ethanol by volume (E10).

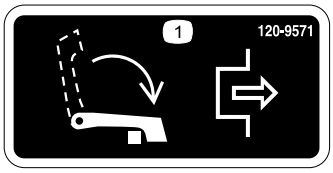

decal120-9571

120-9571

1. Lower the lever to disengage the traction.



decal120-9570

120-9570

1. Warning—stay away from moving parts, keep all guards and shields in place.

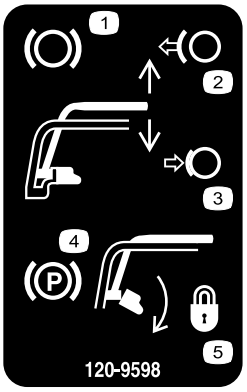

decal120-9598

120-9598

1. Brake
2. Release handle to disengage the brake.
3. Compress the handle to engage the brake.
4. Parking brake
5. Rotate the latch to lock the parking brake; compress the handle to release the latch.

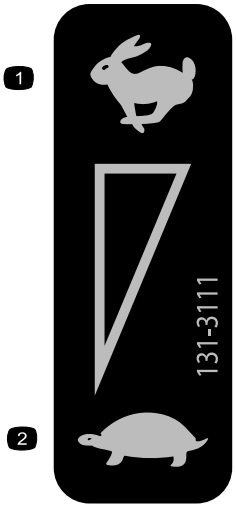

decal131-3111

131-3111

1. Fast
2. Slow

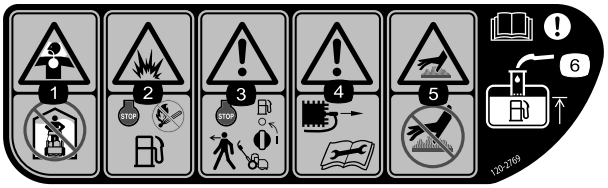

decal120-2769

120–2769

1. Toxic gas inhalation hazard—do not operate indoors.
2. Explosion hazard—shut off the engine and keep away from open flames when refueling.
3. Warning—shut off the engine and turn off the fuel before leaving the machine.
4. Warning—disconnect the spark-plug wire and read the instruction before servicing or performing maintenance.
5. Hot surface/burn hazard—do not touch hot surfaces.
6. Warning—read the *Operator's Manual*; when adding fuel to the tank, only fill to the bottom of the fill tube.

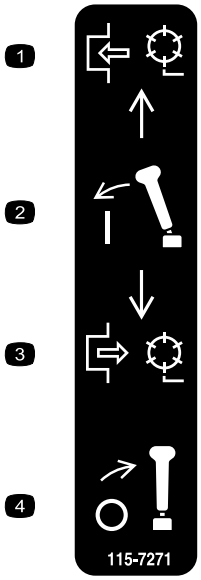

decal115-7271

115-7271

1. Engage the reel.
2. Engage the lever.
3. Disengage the reel.
4. Disengage the lever.



decal133-2335

133–2335

1. Warning—read the *Operator's Manual*; do not operate the machine unless you are trained.
2. Warning—wear hearing protection.
3. Thrown object hazard—keep bystanders a safe distance from the machine.
4. Warning—stay away from moving parts; keep all guards and shields in place.
5. Do not tow the machine.

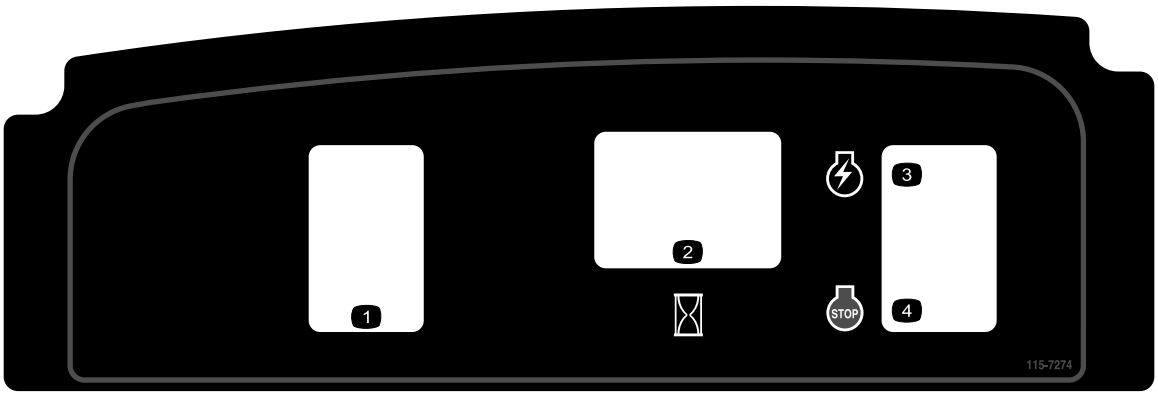

decal115-7274

115-7274

1. Lights (optional)
2. Hour meter
3. Engine—start
4. Engine—shut off

Setup

Loose Parts

Use the chart below to verify that all parts have been shipped.

Procedure	Description	Qty.	Use
1	No parts required	–	Prepare the traction unit (optional).
2	Bolt, 3/8 x 3/4 inch	2	Install the cutting unit to the traction unit.
3	Handle retainer Hairpin cotter	2 2	Install the handle retainers.
4	Transport wheels (Optional Transport Wheel Kit, Model 04123)	2	Install the transport wheels.
5	No parts required	–	Check the engine-oil level.
6	Grass basket	1	Install the grass basket.

Media and Additional Parts

Description	Qty.	Use
Operator's Manual Engine Operator's Manual Parts Catalog Operator Training Material Certificate of Compliance	1 1 1 1 1	Read or view these materials before operating the machine.

Note: Determine the left and right sides of the machine from the normal operating position.

1

Preparing the Traction Unit

Optional

No Parts Required

Procedure

If you are installing cutting unit 04251, 02452, 04253, or 04254 on this traction unit, complete the following steps:

1. Position the cutting unit on a flat, level surface.
2. On both pitch arms (Figure 3), measure 2.28 mm (0.09 inch) in on the tabs and grind down the corner as shown in Figure 4.

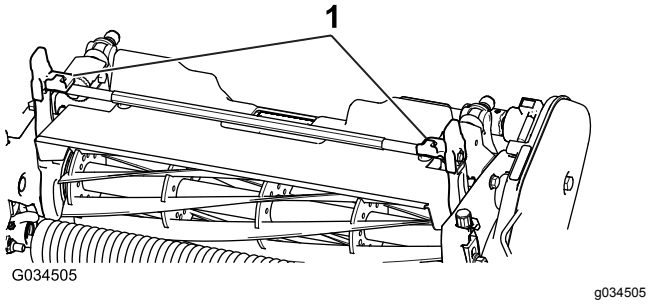

Figure 3

1. Pitch arms

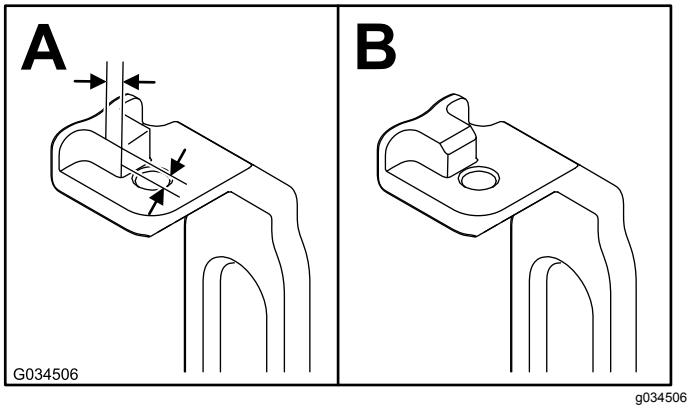

Figure 4

3. Paint the revealed metal to prevent corrosion.

2

Installing the Cutting Unit to the Traction Unit

Parts needed for this procedure:

2	Bolt, 3/8 x 3/4 inch

Procedure

1. Place the machine on its drums on a level surface.
2. Lower the kick stand and push in the locking pin to lock the kick stand in the service position (Figure 5). Allow the machine to rest on the locking pin.

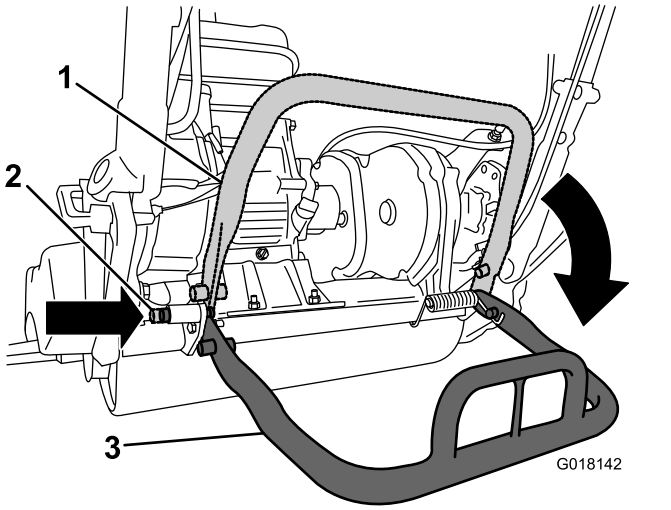

Figure 5

1. Kickstand—storage position
2. Locking pin
3. Kickstand—service position

3. Push the cutting unit under the traction unit and to the left to engage the transmission coupling (Figure 6).

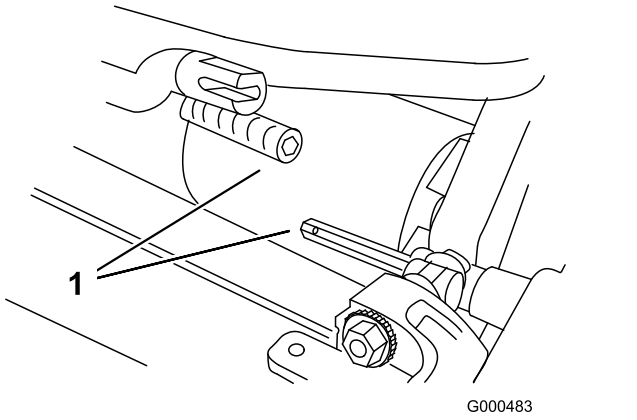

Figure 6

1. Transmission coupling

4. Maneuver the traction unit frame (Figure 7) forward until it engages the cutting unit pivot arms.

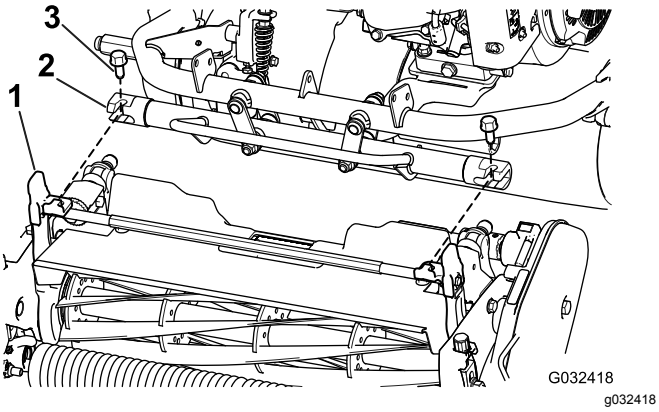

Figure 7

1. Cutting unit pivot arms
2. Traction unit frame
3. Bolts

5. Secure the traction unit frame to the cutting unit pivot arms with 2 bolts (3/8 x 3/4 inch) (Figure 7).

   Note: To remove the cutting unit, just loosen the 2 bolts (3/8 x 3/4 inch) approximately 1-1/2 turns and rotate the pivot arms out.

6. Push down on the kick stand to release the spring-loaded locking pin and allow the kick stand to rotate up to the storage position.

3

Installing the Handle Retainers

Parts needed for this procedure:

2	Handle retainer
2	Hairpin cotter

Procedure

1. While supporting the handle, remove the cable ties securing the handle clamps to the side plates (Figure 8).

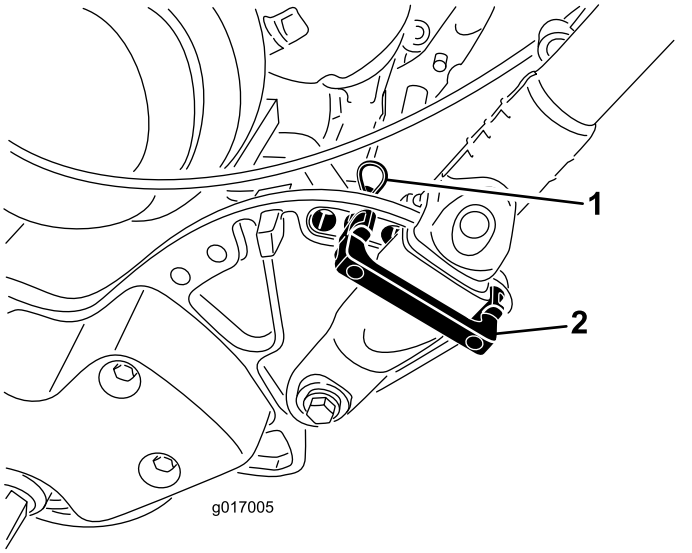

Figure 8

1. Hairpin cotter
2. Handle retainer

2. Pivot the handle to the desired operating position, insert a handle retainer over the handle clamp and into the matching holes in the side plate (Figure 8).
3. Secure the clamp in position with a hairpin cotter (Figure 8).
4. Repeat the procedure on the opposite side of the handle.
5. Adjust the handle height to the desired position; refer to Adjusting the Handle Height (page 20).

   Note: The machine is shipped with the handle adjusted to the lowest position. The machine is traditionally operated with the handle telescoped out to its maximum height.

4

Installing the Transport Wheels

Parts needed for this procedure:

2	Transport wheels (Optional Transport Wheel Kit, Model 04123)

Procedure

1. Push the kickstand down with your foot **in the center of the kickstand** and pull up on the lower center machine handle until the kickstand has rotated forward, over center (Figure 9).

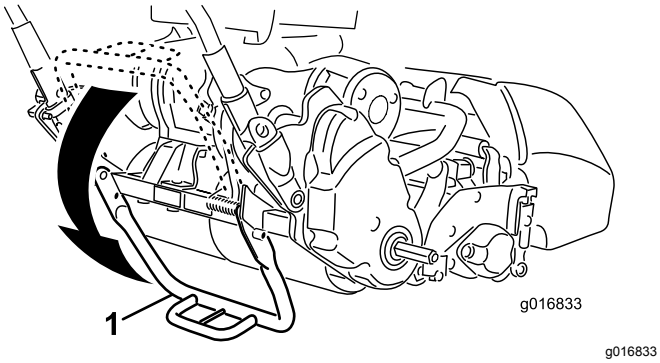

g016833

Figure 9

1. Kickstand

2. Press the wheel locking clip toward the center of wheel and slide the wheel onto the hex shaft (Figure 10).

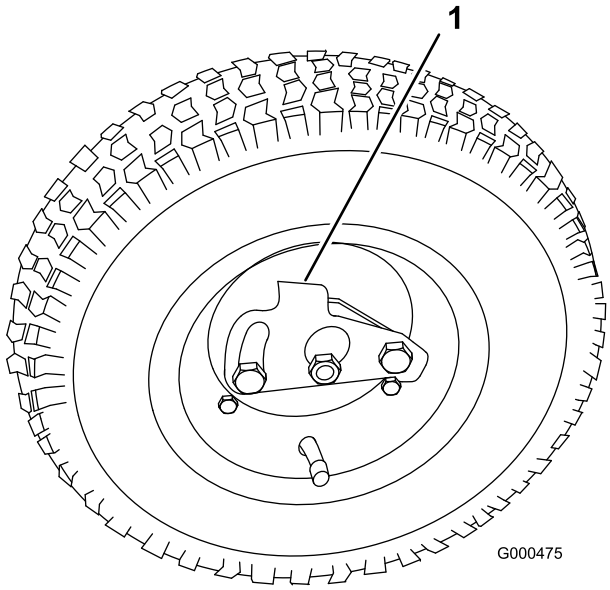

g000475

Figure 10

1. Locking clip

3. Rotate the wheel back and forth until it slides completely onto the axle and the locking clip is secured in the groove on the axle shaft.
4. Repeat the procedure on the opposite side of the machine.
5. Inflate the tires to 83 to 103 kPa (12 to 15 psi).
6. Carefully lower the machine off the kick stand by pushing forward slowly or by lifting the lower center handle support, allowing the kickstand to spring back to its normal position.

5

Checking the Engine-Oil Level

No Parts Required

Procedure

Check the engine-oil level, refer to Checking the Engine-Oil Level (page 28).

6

Installing the Grass Basket

Parts needed for this procedure:

1	Grass basket

Procedure

1. Grasp the basket by the handle (Figure 11).

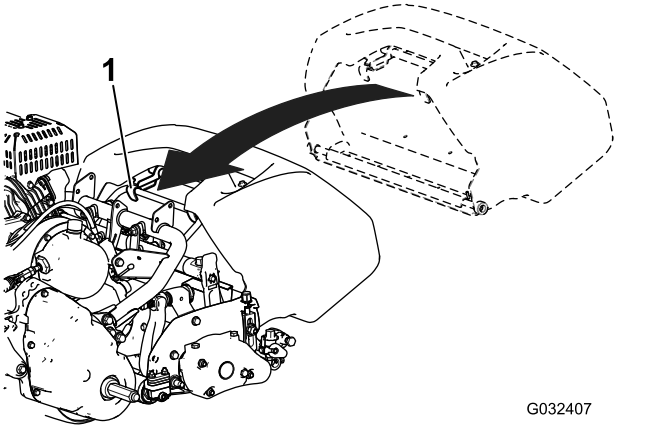

Figure 11

1. Basket hooks

2. Guide the basket lip between the cutting unit side plates and over the front roller (Figure 11).
3. Install the basket hooks over the frame loop (Figure 11).

Important: **If you ever drop the basket, examine the pitch arm contact points near the lower lip of the basket for damage (Figure 12). Straighten them before using the basket. Using the basket with bent pitch arm contact points may cause contact between the basket and reel causing undesired noise and/or damage to the basket and reel.**

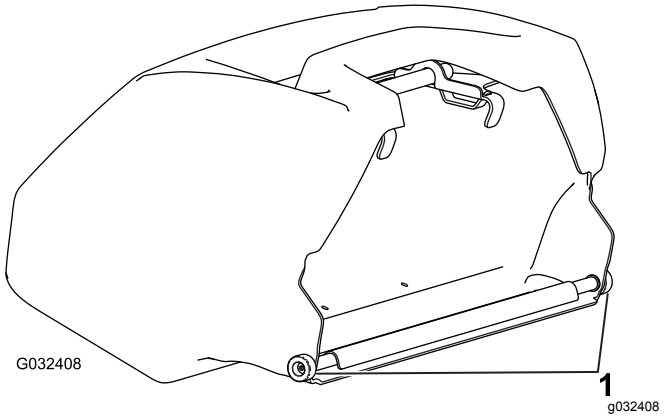

Figure 12

1. Pitch arm contact point

Product Overview

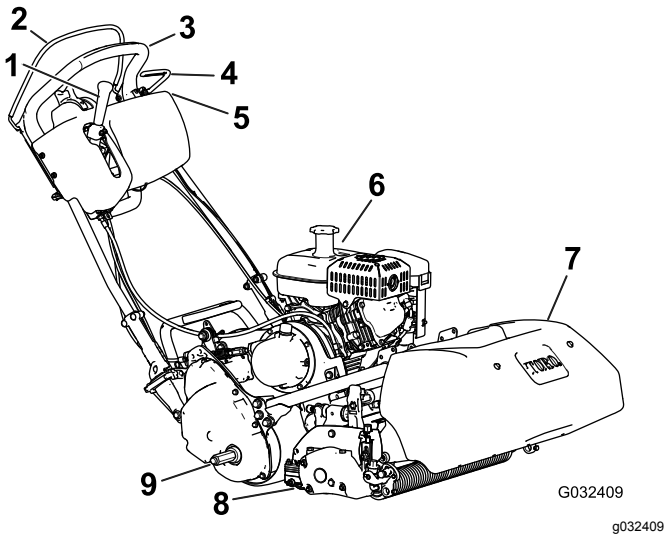

Figure 13

1. Traction and reel-drive engagement lever
2. Operator-presence control
3. Handle
4. Service brake
5. Control panel
6. Fuel tank
7. Grass basket
8. Cutting unit
9. Transport wheel axle

Controls

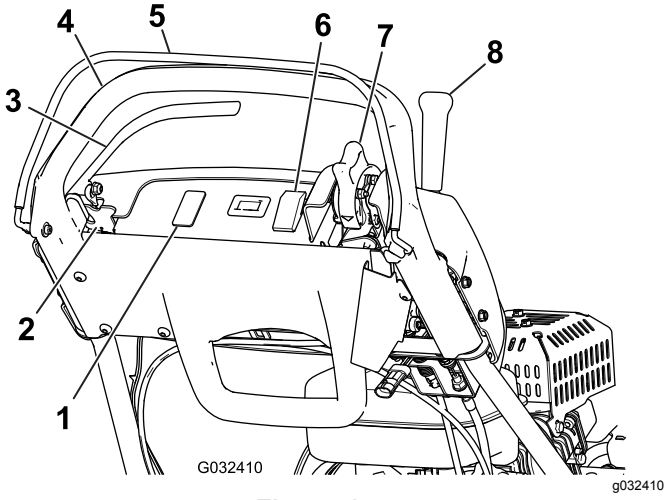

Figure 14

1. Open space for optional lights
2. Parking-brake latch
3. Service brake
4. Handle
5. Operator-presence control
6. On/off switch
7. Throttle control
8. Traction and reel-drive engagement lever

Throttle Control

The throttle control (Figure 14 and Figure 15) is located on the right, rear side of the control panel. Rotate the throttle to regulate the engine speed.

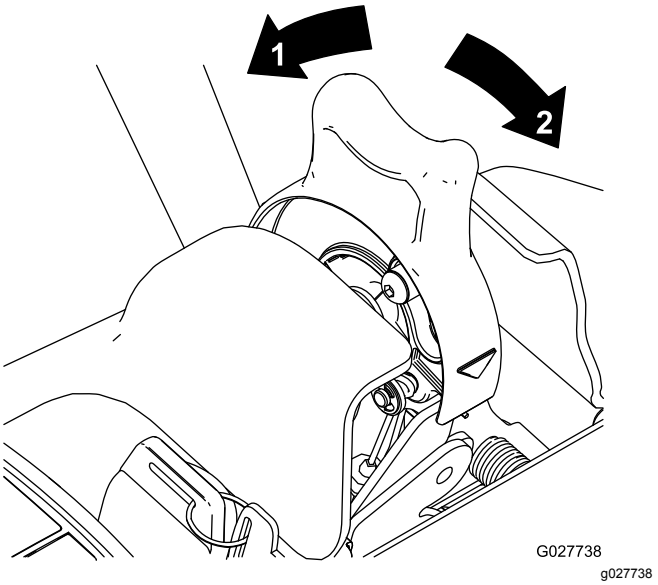

Figure 15

1. Full speed
2. Slow speed

Traction and Reel-Drive Engagement Lever

The traction and reel-drive engagement lever (Figure 16) is located on the front right side of the control panel. For transport operation, the lever has 2 positions: NEUTRAL and FORWARD. Pushing the lever forward engages the traction drive.

Note: To move the lever you must first engage the operator-presence control.

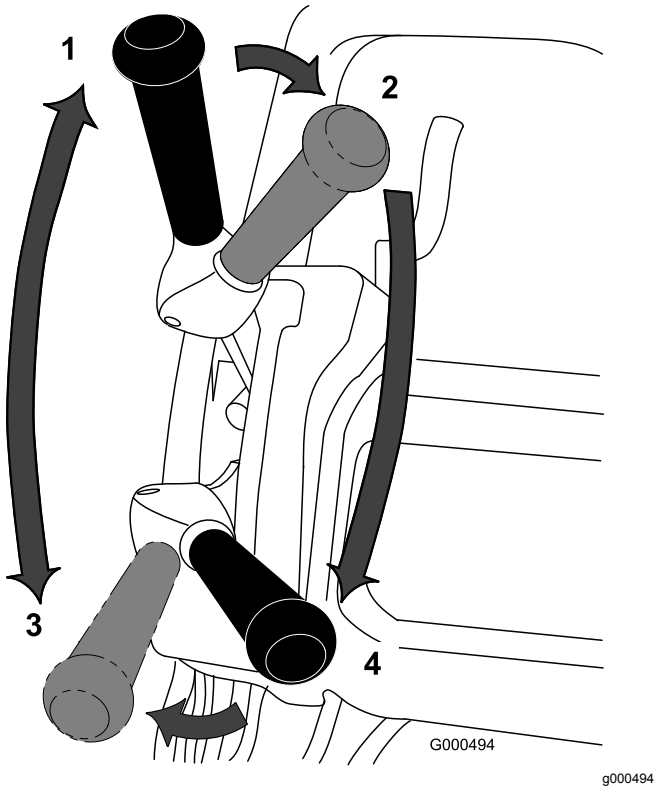

Figure 16

1. NEUTRAL
2. Traction drive neutral and reel drive off
3. Traction drive-engaged (transport)
4. Traction drive and reel drive engaged

For reel operation, the lever has 2 positions: ENGAGE and DISENGAGE. Move the top of the lever to the left then forward to engage the reel and begin mowing. Push the lever to the right to disengage the reel and continue forward motion or pull back on it to disengage both the reel and the traction drive.

Note: If you release the operator-presence control, the lever returns to neutral and the machine stops.

Service Brake

The service brake (Figure 17) is located on the left front side of the handle. Pulling the lever back will apply the service brake. You must release the brake before you engage the traction drive.

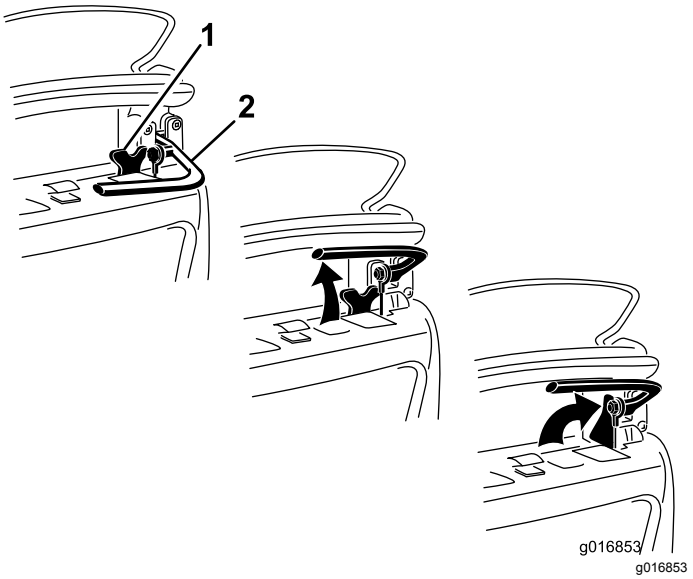

Figure 17

1. Parking-brake latch
2. Service brake

Parking-Brake Latch

The parking-brake latch (Figure 17) is used with the service brake. With the service brake engaged, rotate the parking-brake latch toward the brake handle and release the service brake onto the latch to hold the service brake in place. Pull the brake lever to release it.

On/Off Switch

The on/off switch (Figure 14) is located on top of the control panel. Move the switch to the ON position to start the engine and OFF to shut off the engine.

Operator-Presence Control (OPC)

The operator-presence control (Figure 14) must be engaged before engaging the traction lever. Releasing the OPC during operation returns the machine to neutral but does not shut off the engine.

Choke Lever

The choke lever (Figure 18) is located on the engine. The lever has 2 positions: RUN and CHOKE. Move the choke lever to the half-open position when starting a cold engine. After the engine starts, move the lever to the RUN position.

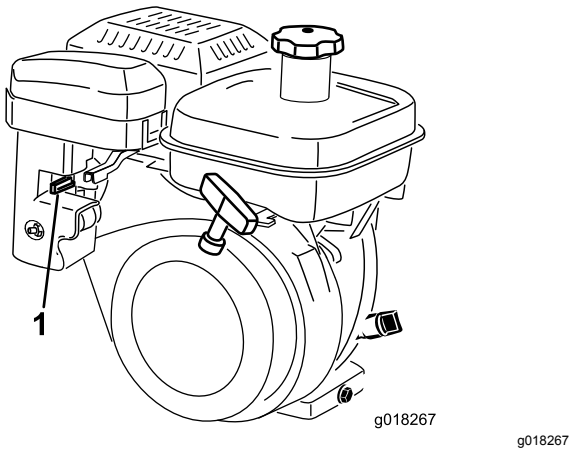

g018267

Figure 18

1. Choke lever in the CHOKE position

Fuel-Shutoff Valve

The fuel-shutoff valve (Figure 19) is located on the engine. The valve has 2 positions: CLOSED and OPEN. Move the lever to the CLOSED position when storing or transporting machine. Open the valve before starting the engine. The fuel cup is located below the shutoff valve.

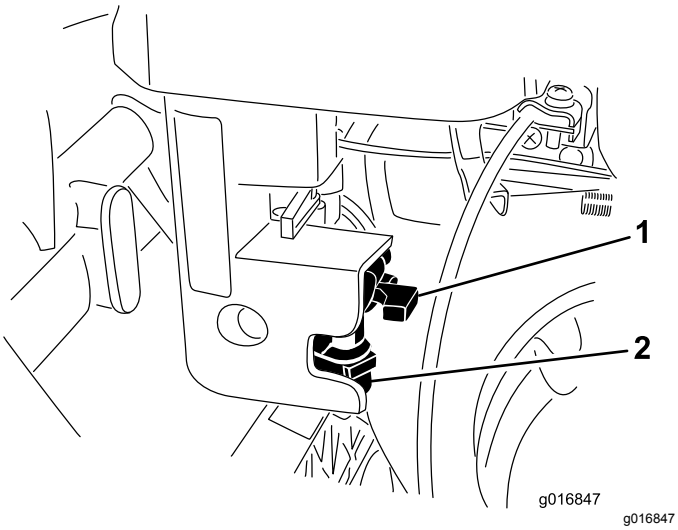

g016847

Figure 19

1. Fuel-shutoff valve in closed position
2. Fuel cup

Recoil-Starter Handle

Pull the recoil-starter handle (Figure 20) to start the engine.

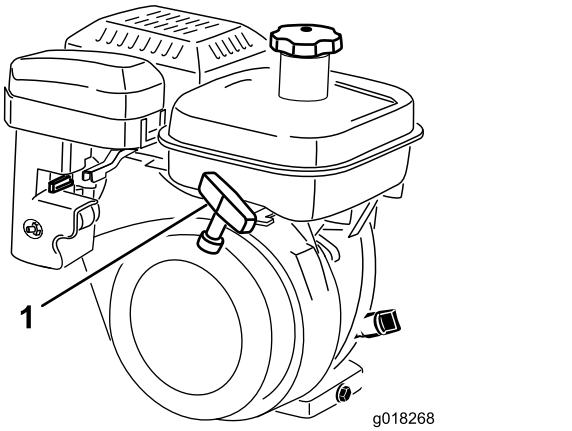

g018268

Figure 20

1. Recoil-starter handle

Kickstand

The kickstand (Figure 22) is mounted to the rear of the machine and is used to raise the rear of the machine for installing or removing the transport wheels and for preventing the machine for falling onto the handle when you remove the reel.

- To use the kickstand to install the transport wheels, lower it to the ground and step down on the kickstand loop while pulling up and back on the lower center machine handle (Figure 21).

⚠ CAUTION

The machine is heavy and can cause back strain if lifted improperly.

Put foot pressure down only on the kickstand loop and only use the lower center machine handle to raise the unit. Attempting to raise the unit onto the kickstand any other way can cause injury.

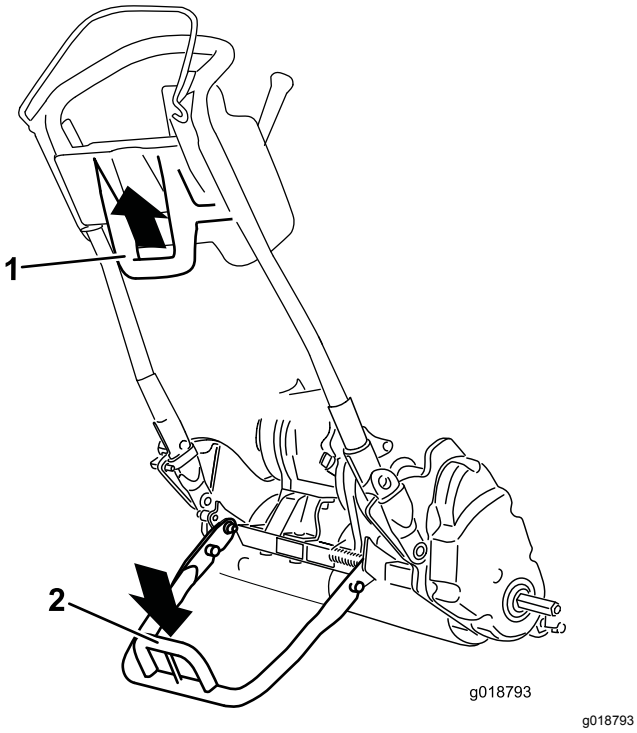

g018793

Figure 21

1. Lower center machine handle
2. Kickstand loop

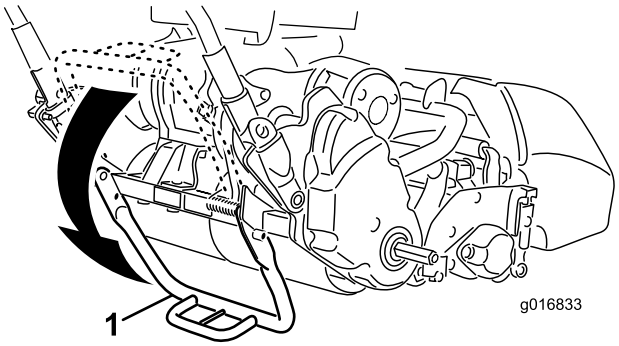

g016833

Figure 22

1. Kickstand
2. Kickstand loop

- To prevent the unit from tipping backward when removing the reel, lower the kickstand and push in the locking pin to lock it in the SERVICE position (Figure 23).

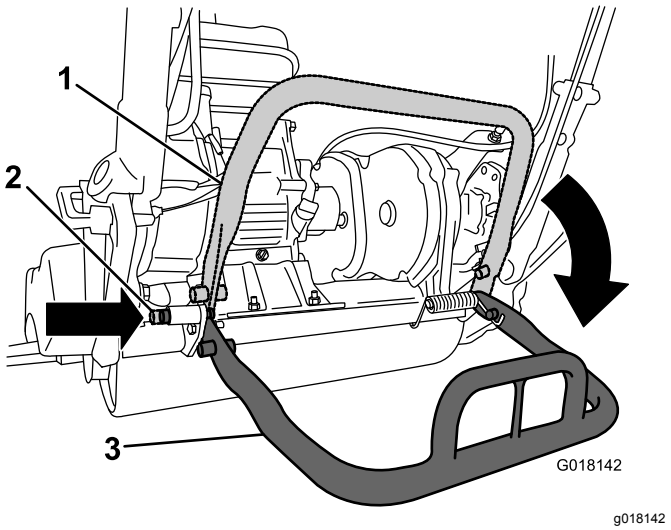

g018142

Figure 23

1. Kickstand—STORAGE position
2. Locking pin
3. Kickstand—SERVICE position

Specifications

1820 Traction Unit

Width	82.5 cm (32-1/2 inches)
Height	104.8 cm (41–1/4 inches)
Length with basket	152.4 cm (60 inches)
Net Weight (with 11 blade cutting unit and grass basket installed)	117 kg (258 lb)
Width of cut	46 cm (18 inches)
Height of cut	1.5 to 7.5 mm (1/16 to 19/64 inches) with Micro-Cut bedknife
Clip frequency	Adjustable (refer to Cutting Unit Operator's Manual)

2120 Traction Unit

Width	90.1 cm (35-1/2 inches)
Height	104.8 cm (41–1/4 inches)
Length with basket	152.4 cm (60 inches)
Net Weight (with 11 blade cutting unit and grass basket installed)	117.9 kg (260 lb)
Width of cut	53.3 cm (21 inches)
Height of cut	1.5 to 7.5 mm (1/16 to 19/64 inches) with Micro-Cut bedknife
Clip frequency	Adjustable (refer to Cutting Unit Operator's Manual)

Attachments/Accessories

A selection of Toro approved attachments and accessories is available for use with the machine to enhance and expand its capabilities. Contact your Authorized Service Dealer or Distributor or go to www.Toro.com for a list of all approved attachments and accessories.

To best protect your investment and maintain optimal performance of your Toro equipment, count on Toro genuine parts. When it comes to reliability, Toro delivers replacement parts designed to the exact engineering specification of our equipment. For peace of mind, insist on Toro genuine parts.

Operation

Note: Determine the left and right sides of the machine from the normal operating position.

Think Safety First

Carefully read all safety instructions and symbols in the safety section. Knowing this information could help you or bystanders avoid injury.

⚠ CAUTION

This machine produces sound levels that can cause hearing loss through extended periods of exposure.

Wear hearing protection when operating this machine.

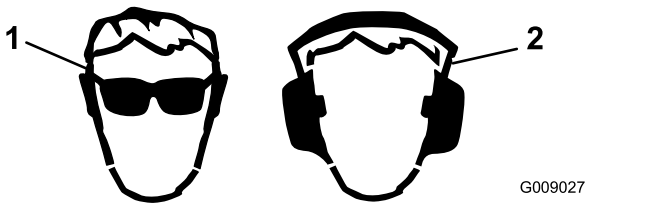

g009027

Figure 24

1. Wear eye protection.
2. Wear hearing protection.

Checking the Engine-Oil Level

Check the engine-oil level before each use or every 8 operating hours, refer to Checking the Engine-Oil Level (page 28).

Filling the Fuel Tank

The fuel tank capacity is 3.0 L (0.79 gallons).

- For best results, use only clean, fresh (less than 30 days old), unleaded gasoline with an octane rating of 87 or higher ((R+M)/2 rating method).
- **Ethanol**: Gasoline with up to 10% ethanol (gasohol) or 15% MTBE (methyl tertiary butyl ether) by volume is acceptable. Ethanol and MTBE are not the same. Gasoline with 15% ethanol (E15) by volume is not approved for use. **Never use gasoline that contains more than 10% ethanol by volume**, such as E15 (contains 15% ethanol), E20 (contains 20% ethanol), or E85 (contains up to 85% ethanol). Using unapproved gasoline may cause performance problems and/or engine damage which may not be covered under warranty.

- **Do not** use gasoline containing methanol.
- **Do not** store fuel either in the fuel tank or fuel containers over the winter unless a fuel stabilizer is used.
- **Do not** add oil to gasoline.

⚠ DANGER

In certain conditions, gasoline is extremely flammable and highly explosive. A fire or explosion from gasoline can burn you and others and can damage property.

- **Fill the fuel tank outdoors, in an open area, when the engine is cold. Wipe up any gasoline that spills.**
- **Never fill the fuel tank inside an enclosed trailer.**
- **Do not fill the fuel tank completely full. Add gasoline to the fuel tank until the level is 6 to 13 mm (1/4 to 1/2 inch) below the bottom of the filler neck. This empty space in the tank allows gasoline to expand.**
- **Never smoke when handling gasoline, and stay away from an open flame or where gasoline fumes may be ignited by a spark.**
- **Store gasoline in an approved container and keep it out of the reach of children. Never buy more than a 30-day supply of gasoline.**
- **Do not operate without entire exhaust system in place and in proper working condition.**

⚠ DANGER

In certain conditions during fueling, static electricity can be released causing a spark which can ignite the gasoline vapors. A fire or explosion from gasoline can burn you and others and can damage property.

- **Always place gasoline containers on the ground away from your vehicle before filling.**
- **Do not fill gasoline containers inside a vehicle or on a truck or trailer bed because interior carpets or plastic truck bed liners may insulate the container and slow the loss of any static charge.**
- **When practical, remove gas-powered equipment from the truck or trailer and refuel the equipment with its wheels on the ground.**
- **If this is not possible, then refuel such equipment on a truck or trailer from a portable container, rather than from a gasoline dispenser nozzle.**
- **If a gasoline dispenser nozzle must be used, keep the nozzle in contact with the rim of the fuel tank or container opening at all times until fueling is complete.**

⚠ WARNING

Gasoline is harmful or fatal if swallowed. Long-term exposure to vapors can cause serious injury and illness.

- **Avoid prolonged breathing of vapors.**
- **Keep face away from nozzle and gas tank or conditioner bottle opening.**
- **Avoid contact with skin; wash off spillage with soap and water.**

1. Clean around the fuel-tank cap and remove the cap from the tank (Figure 25). Using unleaded gasoline, fill the fuel tank no higher than to the bottom of the filter screen. Do not overfill.

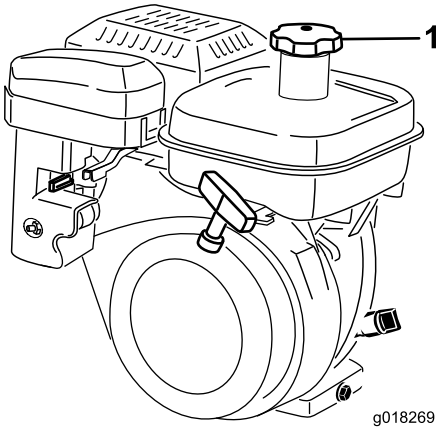

g018269

Figure 25

1. Fuel-tank cap

2. Install the fuel-tank cap and wipe up any spilled gasoline.

Adjusting the Handle Height

Note: The machine is shipped with the handle adjusted to the lowest position. The machine is traditionally operated with the handle telescoped out to its maximum height.

1. Loosen the 3 carriage bolts and nuts securing each side of the handle in the handle clamps (Figure 26).

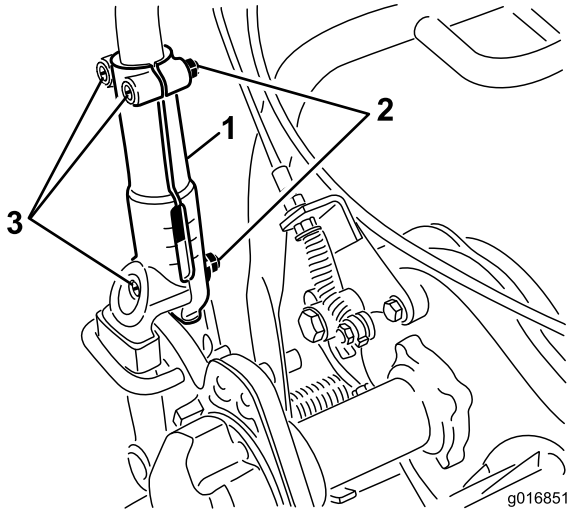

g016851

Figure 26

1. Handle clamp
2. Nut
3. Carriage bolts

2. Pull up on the handle slowly and evenly on each side until it is in the desired operating position.
3. Tighten the carriage bolts and nuts to lock the adjustment.

Adjusting the Handle Angle

1. Remove the hairpin cotters from the handle retainers on each side of the machine (Figure 27).

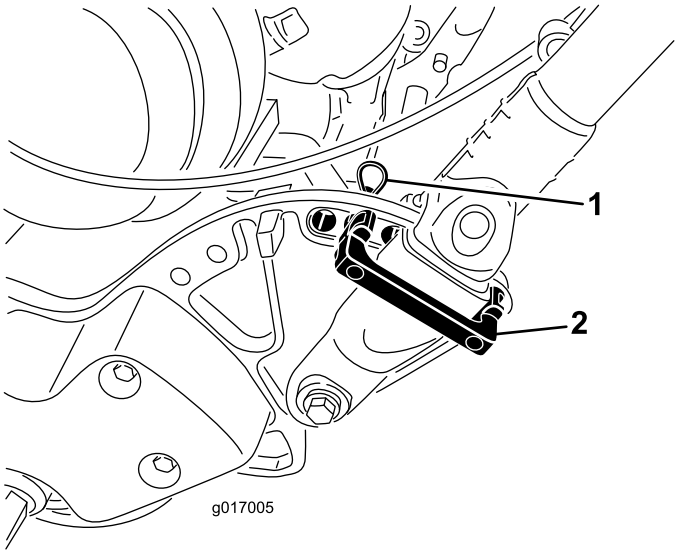

g017005

Figure 27

1. Hairpin cotter
2. Handle retainer

2. While supporting the handle, remove the hairpin cotters from each side and pivot the handle to the desired operating position (Figure 27).
3. Install the handle retainers and hairpin cotters.

Adjusting the Throttle Control

1. Remove the console cover.
2. Loosen the 2 fasteners securing the throttle control (Figure 28).

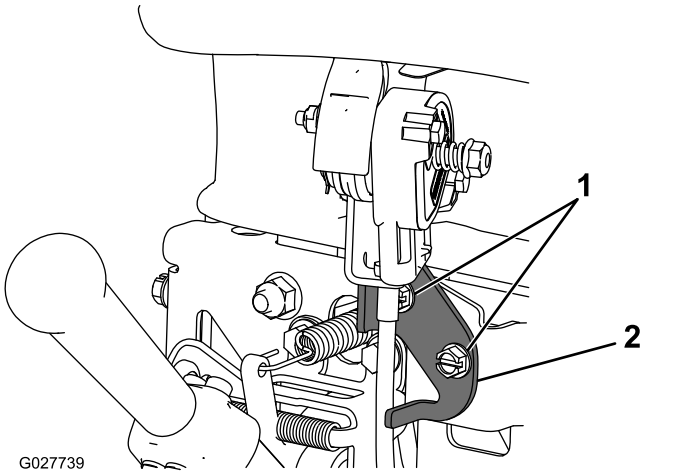

Figure 28

1. Fasteners
2. Throttle control

3. Adjust the throttle control to the desired position.
4. Tighten the throttle-control fasteners.
5. Install the previously removed console cover.

Starting and Shutting Off the Engine

Note: For illustrations and descriptions of the controls referenced in this section, refer to Controls (page 14).

Starting the Engine

Note: Ensure that the spark-plug wire is installed on the spark plug.

1. Ensure that the traction and reel-drive levers are in the Disengaged position.

   Note: The engine will not start if the traction lever is in the engaged position.
2. Move the on/off switch to the ON position.
3. Move the throttle control to the FAST position.
4. Open the fuel-shutoff valve on the engine.
5. Move the choke lever to the half-open position when starting a cold engine. The choke may not be required when starting a warm engine.
6. Pull the recoil starter handle out until positive engagement results, then pull it vigorously to start the engine. Open the choke as the engine warms up.

   Important: **Do not pull the recoil rope to its limit or let go of the starter handle when the rope is pulled out because the rope may break or the recoil assembly may be damaged.**

Shutting Off the Engine

1. Move the traction and reel drive controls to the DISENGAGED position, the throttle control to SLOW, and the on/off switch to OFF.
2. Pull the molded spark-plug wire off of the spark plug to prevent the possibility of accidental starting before storing the machine.
3. Close the fuel-shutoff valve before storing or transporting the machine in a vehicle.

Transporting the Machine

Note: Do not run the engine while transporting it in a transport trailer because damage can occur to the machine.

If the optional transport wheels are not going to be installed, proceed to step 4.

1. Push the kick stand down with your foot and pull up on the handle support until the kickstand has rotated forward, over center.
2. Install the transport wheels.
3. To release the kickstand, pull up on the handle and lower the rear of the machine onto the transport wheels.
4. Ensure that the traction and reel drive controls are in the DISENGAGED position and start the engine.
5. Set the throttle control to SLOW, tip the front of the machine up, gradually engage the traction drive, and slowly increase the engine speed.
6. Adjust the throttle to operate the machine at the desired ground speed and transport the machine to the desired destination.

Preparing to Mow

1. Return the traction control lever to the DISENGAGED position, the throttle to the SLOW position, and shut off the engine.
2. Push the kick stand down with your foot and pull up on the handle support until the kickstand has rotated forward, over center.
3. Remove the transport wheels.
4. Carefully lower the machine off the kickstand.

Ensure that the machine is carefully adjusted and that it is set evenly on both sides of the reel. Improper machine adjustment is magnified in the appearance of the clipped turf. Remove all foreign objects from the turf prior to mowing. Make sure that everyone,

especially children and pets, are clear of the work area.

Mowing Tips

Important: **Grass clippings act as a lubricant when mowing. Excessive operation of the cutting unit with the absence of grass clippings can damage the cutting unit.**

- The greens should be mowed in a straight back and forth direction across the green.
- Avoid circular mowing or turning the machine on the greens areas to prevent scuffing.
- Turning the machine should be done off the green by raising the cutting reel (pushing the handle down) and turning on the traction drum.
- Mowing should be done at a normal walking pace. Fast speeds saves very little time and results in an inferior mowing job.
- To assist in maintaining a straight line across the green and to keep the machine an equal distance from the edge of the previous cut, use the alignment stripes on the basket (Figure 29).

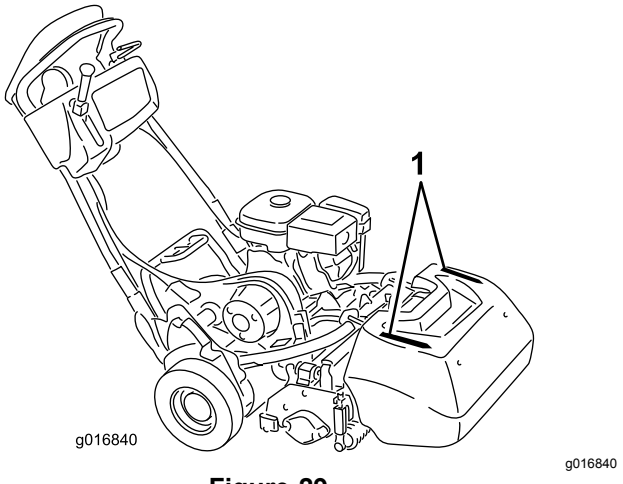

Figure 29

1. Alignment stripes

Operating the Machine in Low Light Conditions

When operating the machine in low light conditions, use the optional LED Light Kit, available from your Authorized Toro Distributor.

Important: **Do not use other light systems with this machine as they will not operate properly with the engine AC output.**

Operating the Controls while Mowing

1. Start the engine, set the throttle to a reduced speed, push down on the handle to raise the cutting unit, press the operator-presence control, move the traction lever to the ENGAGED position and transport the machine onto the collar of the green (Figure 30).
2. Move the traction lever to the DISENGAGED position and engage the reel-drive lever (Figure 30).

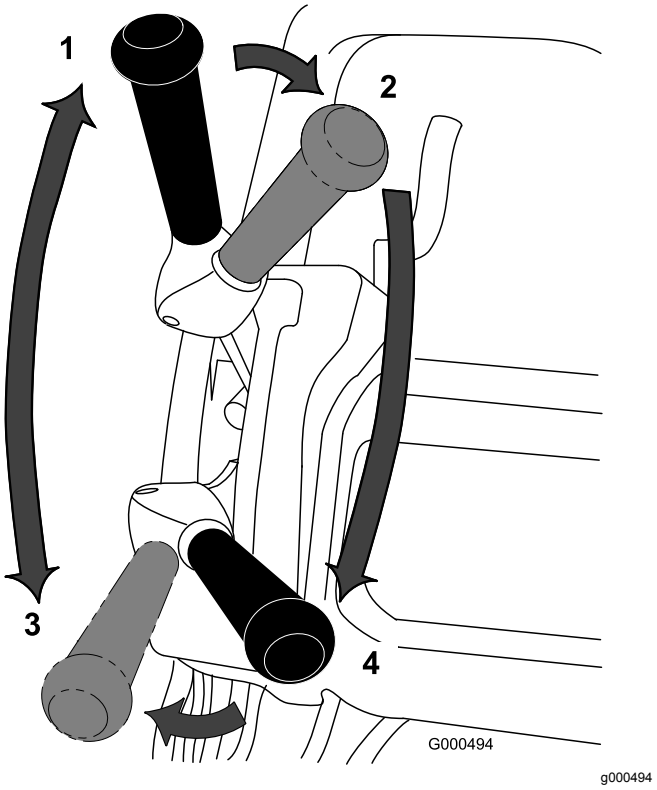

Figure 30

1. Traction drive—neutral
2. Traction drive neutral and reel drive off
3. Traction drive—engaged (transport)
4. Traction drive and reel drive engaged

3. Move the traction lever to the ENGAGED position, increase the throttle speed until the machine is traveling at the desired ground speed, drive the machine out onto the green area, lower the front of the machine down, and commence operation (Figure 30).

Operating the Controls after Mowing

1. Drive off the green, move the reel drive and traction control levers to the DISENGAGED position, and shut off the engine.

2. Empty the grass basket of clippings, install the grass basket on the machine, and commence the transport operation.

Checking the Operation of the Interlock Switches

Service Interval: Before each use or daily

⚠ CAUTION

If the safety interlock switches are disconnected or damaged, the machine could operate unexpectedly, causing personal injury.

- **Do not tamper with the interlock switches.**
- **Check the operation of the interlock switches daily and replace any damaged switches before operating the machine.**

Checking the Operator-Presence Control (OPC) Interlock Switch

1. Push the kick stand down with your foot and pull up on the handle support until the kickstand has rotated forward, over center.
2. Start the engine.
3. With the OPC released, attempt to engage the traction lever (Figure 31). The traction lever should not engage. If the traction lever engages, the interlock system needs service. Correct the problem before operating; refer to Servicing the Traction Interlock Switch (page 31).

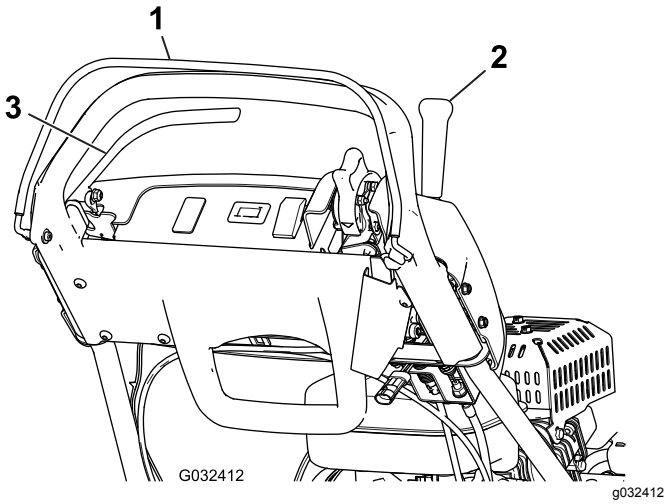

Figure 31

1. Operator-presence control (OPC)
2. Traction lever
3. Brake lever

4. With the OPC pressed and the traction lever engaged, release the OPC (Figure 31). The traction lever should disengage. If the traction lever does not disengage, the interlock system needs service. Correct the problem before operating; refer to Servicing the Traction Interlock Switch (page 31).
5. With the OPC pressed and the shift lever moved to the left, engage the traction and reel drive, release the OPC (Figure 31). The traction lever should disengage. If the traction lever does not disengage, the interlock system needs service. Correct the problem before operating.; refer to Servicing the Traction Interlock Switch (page 31) or Adjusting the Reel Control (page 35).
6. With the OPC pressed and the shift lever moved to the left to engage the traction and reel drive, move the shift lever to the right to disengage the reel drive (Figure 31). The reel drive should disengage. If the reel drive does not disengage, the interlock system needs service. Correct the problem before operating.; refer to Adjusting the Reel Control (page 35).
7. Carefully lower the machine off the kickstand.

Checking the Traction Interlock Switch

1. Push the kickstand down with your foot and pull up on the handle support until the kickstand has rotated forward, over center.
2. With the OPC pressed, the traction lever engaged, and the engine controls in the starting position (Figure 31). Attempt to start the engine. The engine should not start. If the engine starts, the interlock switch needs service. Correct the problem before operating. Refer to Servicing the Traction Interlock Switch (page 31).
3. Carefully lower the machine off the kickstand.

Checking the Brake-Interlock Switch

1. Push the kickstand down with your foot and pull up on the handle support until the kickstand has rotated forward, over center.
2. With the traction lever disengaged, the service brake engaged, and the engine controls in the starting position (Figure 31), attempt to start the engine. The engine should start. If the engine does not start, the interlock switch needs service. Correct the problem before operating the machine; refer to Servicing the Brake-Interlock Switch (page 32).
3. With the engine running, engage the service brake (not the parking brake), press the OPC, and engage the traction lever (Figure 31). The engine should labor to overcome the brake but should not shut off. If the engine shuts off immediately, the interlock switch needs service. Correct the problem before operating the machine; refer to Servicing the Brake-Interlock Switch (page 32).
4. With the engine running, engage the parking-brake latch, press the OPC, and engage the traction lever (Figure 31). The engine should shut off. If the engine does not shut off, the interlock switch needs service. Correct the problem before operating; refer to Servicing the Brake-Interlock Switch (page 32).
5. Carefully lower the machine off the kickstand.

Releasing the Transmission

If the machine becomes disabled, you can disengage the drum from the transmission to allow the machine to be maneuvered.

1. On the right rear corner of the machine, locate the traction engage/disengage lever next to the drive housing drum (Figure 32).

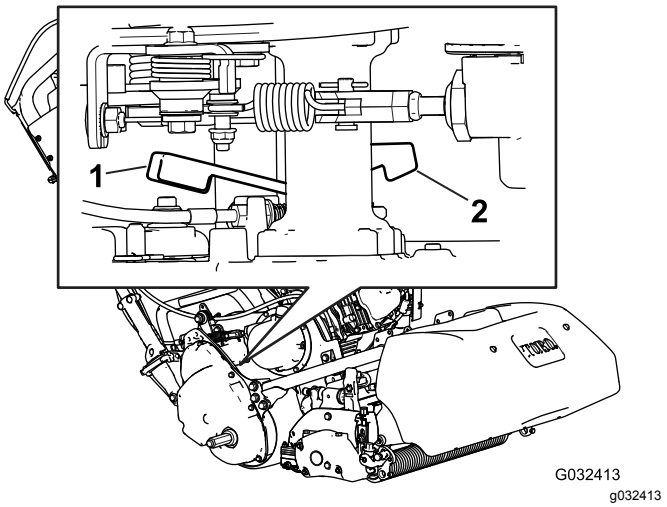

Figure 32

1. Traction engage/disengage lever—engaged
2. Traction engage/disengage lever—disengaged

2. Rotate the lever rearward to disengage the transmission from the drum.

⚠ CAUTION

Not carefully rotating the lever may cause the spring-loaded lever to strike your hand.

Carefully rotate the lever.

3. Move the machine as needed.

Important: **If possible, do not tow the machine. If it is absolutely necessary, do not tow at any speed greater than 4.8 kph (3 mph); always disengage the transmission from the drum. Failing to do so will likely damage the machine.**

4. When finished, rotate the lever forward to engage the transmission to the drum.

Note: The brake is still operational with the transmission disengaged from the drum.

Setting the Machine to Match Turf Conditions

Use the following table to set the machine to match turf conditions.

Bedbars: Standard and Optional (Flex/eFlex 2120 Machines)			
Part Number	**Description**	**Aggressiveness**	**Comments**
106-2468-01	Non-Aggressive	Less	Red, Standard
99-3794-03	Aggressive	More	Black
Bedbars: Standard and Optional (Flex/eFlex 1820 Mowers)			
110-2282-01	Non-Aggressive	Less	Red, Standard
110-2281-03	Aggressive	More	Black

Bedknives: Standard and Optional (Flex/eFlex 2120 Machines)			
Part Number	**Description**	**Height-of-cut Range**	**Comments**
115-1880	Microcut-EdgeMax	1.6 to 3.2 mm (0.062 to 0.125 inch)	Standard
93-4262	Microcut	1.6 to 3.2 mm (0.062 to 0.125 inch)	
108-4303	Extended Microcut	1.6 to 3.2 mm (0.062 to 0.125 inch)	Less aggressive
115-1881	Tournament- EdgeMax	3.2 to 6.4 mm (0.125 to 0.25 inch)	
93-4263	Tournament	3.2 to 6.4 mm (0.125 to 0.25 inch)	
108-4302	Extended Tournament	3.2 to 6.4 mm (0.125 to 0.25 inch)	Less aggressive
93-4264	Low Cut	6.4 mm (0.25 inch) and up	
Bedknives: Standard and Optional (Flex/eFlex 1820 Machines)			
117-1530	Microcut-EdgeMax	1.6 to 3.2 mm (0.062 to 0.125 inch)	Standard
98-7261	Microcut	1.6 to 3.2 mm (0.062 to 0.125 inch)	
110-2300	Extended Microcut	1.6 to 3.2 mm (0.062 to 0.125 inch)	Less aggressive
98-7260	Tournament	3.2 to 6.4 mm (0.125 to 0.25 inch)	
117-1532	Tournament- EdgeMax	3.2 to 6.4 mm (0.125 to 0.25 inch)	
110-2301	Low Cut	6.4 mm (0.25 inch) and up	

Rollers (Flex/eFlex 2120 Machines)			
Part Number	**Description**	**Diameter/Material**	**Comments**
04255	Narrow Wiehle	6.4 cm (2.5 inches)/Aluminum	Narrow spaced grooves
04256	Wide Wiehle	6.4 cm (2.5 inches)/Aluminum	More penetration, wide spaced grooves
04257	Full Roller	6.4 cm (2.5 inches)/Steel	Least penetration
04258	Narrow Wiehle—Long	6.4 cm (2.5 inches)/Aluminum	More edge support; 4.3 cm (1.7 inches) longer
04267	Paspalum	6.4 cm (2.5 inches)/Aluminum	Less penetration, softened narrow spaced grooves
115-7356	Rear Roller	5.1 cm (2.0 inches)/Aluminum	Standard rear
120-9595	Rear Roller	5.1 cm (2.0 inches)/Steel	Steel rear
Rollers (Flex/eFlex 1820 Machines)			
120-9607	Narrow Wiehle	6.4 cm (2.5 inches)/Aluminum	Narrow spaced grooves
120-9609	Wide Wiehle	6.4 cm (2.5 inches)/Aluminum	More penetration, wide spaced grooves
120-9611	Full Roller	6.4 cm (2.5 inches)/Steel	Least penetration
121-4681	Narrow Wiehle—Long	6.4 cm (2.5 inches)/Aluminum	More edge support; 4.3 cm (1.7 inches) longer
120-9605	Rear Roller	5.1 cm (2.0 inches)/Aluminum	Standard rear

Maintenance

Note: Determine the left and right sides of the machine from the normal operating position.

Important: **When using the machine in conjunction with the Trans Pro 80, always use the stops on the trailer when servicing the machine. Overtipping can result in fuel spillage.**

The stop on the Rail Ramp Kit requires a broom handle or similar item to be inserted through the holes behind the wheels.

Recommended Maintenance Schedule(s)

Maintenance Service Interval	Maintenance Procedure
After the first 20 hours	• Change the engine oil. • Clean the fuel cup and fuel-tank screen.
Before each use or daily	• Check the operation of the interlock switches. • Check the engine-oil level.
Every 50 hours	• Change the engine oil. • Clean the air cleaner (more often in dirty or dusty conditions).
Every 100 hours	• Replace the paper air filter element (more often in dirty or dusty conditions). • Check the spark plug. • Clean the fuel cup and fuel-tank screen.
Every 500 hours	• Replace the clutch oil. • Clean the carburetor. • Inspect the intake and exhaust valves. Adjust as necessary.
Every 1,000 hours	• Replace the fuel line. • Inspect the reel-drive belt. • Inspect the transmission bearings and replace as necessary.
Before storage	• Paint chipped surfaces.

Important: **Refer to your engine owner's manual for additional maintenance procedures.**

Daily Maintenance Checklist

Important: **Duplicate this page for routine use.**

Maintenance Check Item	For the week of:						
	Mon.	Tues.	Wed.	Thurs.	Fri.	Sat.	Sun.
Check the safety interlock operation.							
Check the parking brake operation.							
Check that pivot joints operate freely.							
Check the fuel level.							
Check the engine oil level.							
Check the air filter.							
Clean the engine cooling fins.							
Check for unusual engine noises.							
Check for unusual operating noises.							
Check the reel-to-bedknife adjustment.							
Check the height-of-cut adjustment.							
Touch up damaged paint.							

Notation for Areas of Concern		
Inspection performed by:		
Item	Date	Information

Engine Maintenance

Servicing the Engine Oil

Fill the crankcase with approximately 0.6 L (20 fl oz) of the proper viscosity oil before starting. Use a high-quality oil having the American Petroleum Institute (API) service classification SE or higher. Select the proper oil viscosity (weight) based on the ambient temperature. Figure 33 illustrates the temperature/viscosity recommendations.

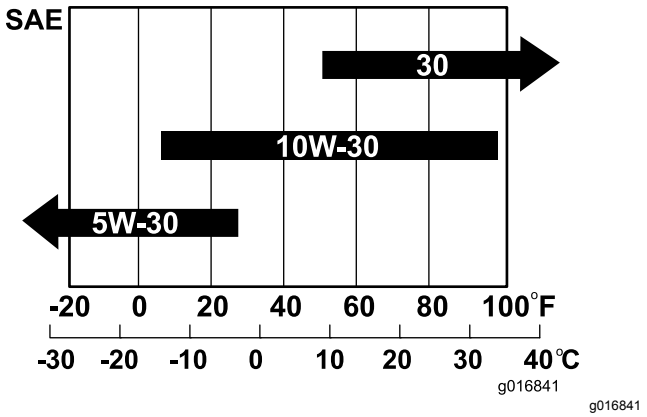

Figure 33

Note: Using multi-grade oils (5W-20, 10W-30 and 10W-40) will increase oil consumption. Check the oil level more frequently when using them.

Checking the Engine-Oil Level

Service Interval: Before each use or daily

Note: The best time to check the engine oil is when the engine is cool, before it has been started for the day. If it has already been run, allow the oil to drain back down to the sump for at least 10 minutes before checking. If the oil level is at or below the L mark on the dipstick, add oil to bring the oil level to the H mark. **Do not overfill.** If the oil level is between the H and L marks, do not add oil.

1. Remove the transport wheels (if installed).
2. Position the machine so that the engine is level and clean around the oil-level gauge (Figure 34).

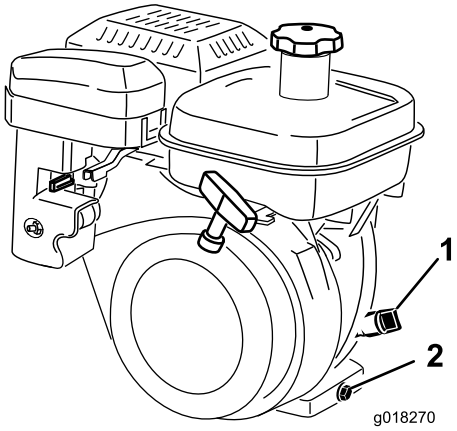

Figure 34

1. Oil-level gauge
2. Drain plug

3. Remove the oil-level gauge by rotating it counterclockwise (Figure 34).
4. Wipe the oil-level gauge clean and insert it into the filler port. Do not screw the gauge into the port. Then remove it and check the level of the oil. If the level is low, add only enough oil to raise the level until it is between the H and L marks on the gauge (Figure 35). Check the level of the oil. Do not overfill.

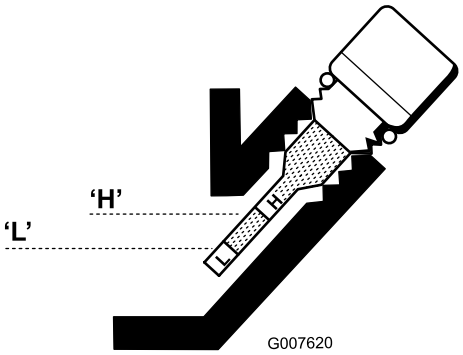

Figure 35

5. Install the oil-level gauge and wipe up any spilled oil.

Changing the Engine Oil

Service Interval: After the first 20 hours

Every 50 hours

1. Start and run the engine for a few minutes to warm the engine oil.
2. At the rear of the machine, place a drain pan under the drain plug (Figure 34). Loosen the drain plug.
3. Push down on the handle to tip the machine and engine backward, allowing all the oil to run into the drain pan.

4. Install the drain plug and refill the crankcase with the specified oil.
5. Wipe up any spilled oil.
6. Dispose of the used oil properly. Recycle according to local codes.

Servicing the Air Cleaner

Service Interval: Every 50 hours

1. Disconnect the wire from the spark plug.
2. Remove the wing nut securing the air-cleaner cover to the air cleaner and remove the cover. Clean the cover thoroughly (Figure 36 and Figure 37).

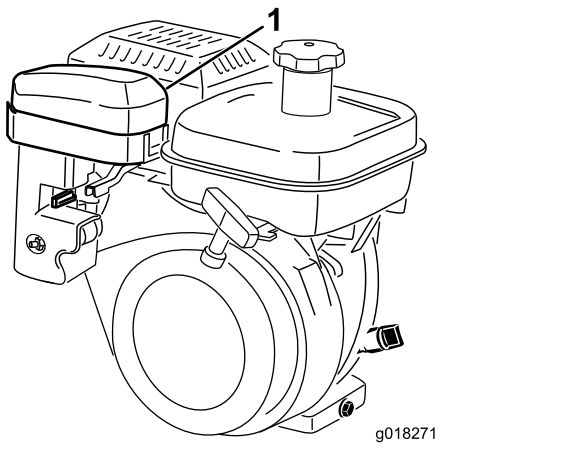

g018271

Figure 36

1. Air-cleaner cover

3. If the foam element is dirty, remove it from the paper element (Figure 37). Clean it thoroughly.
   A. Wash the foam element in a solution of liquid soap and warm water. Squeeze it to remove the dirt, but do not twist it because the foam may tear.
   B. Dry by wrapping in a clean rag. Squeeze the rag and foam element to dry, but do not twist because the foam may tear.
   C. Saturate the element with clean engine oil. Squeeze the element to remove the excess oil and to distribute the oil thoroughly.

   Note: An element damp with oil is desirable.

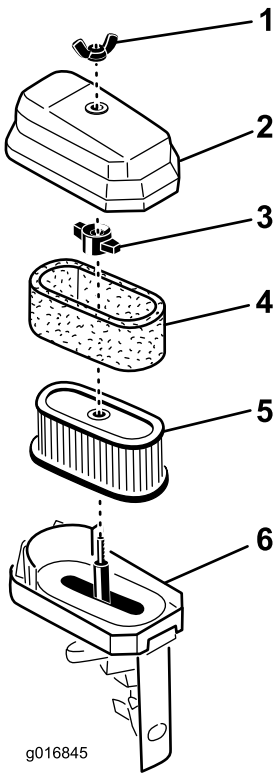

g016845

Figure 37

1. Wing nut
2. Air-cleaner cover
3. Wing nut
4. Foam element
5. Paper element
6. Air-cleaner base

4. When servicing the foam element, check the condition of the paper element. Replace as required.

   Note: Do not use compressed air to clean the paper element.
5. Install the foam element, paper element, and air-cleaner cover.

   Important: **Do not operate the engine without the air-cleaner element because extreme engine wear and damage will result.**

Servicing the Spark Plug

Service Interval: Every 100 hours

Use an NGK BR6HS spark plug or equivalent. The correct air gap is 0.6 to 0.7 mm (0.024 to 0.028 inch).

1. Pull the molded wire off the spark plug (Figure 38).

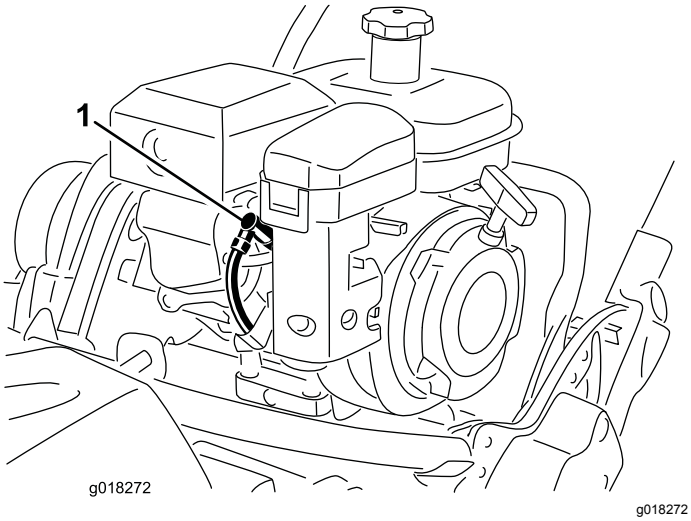

Figure 38

1. Spark-plug wire

2. Clean around the spark plug and remove the plug from the cylinder head.

   Important: **Replace a cracked, fouled, or dirty spark plug. Do not sand blast, scrape, or clean the electrodes because engine damage could result from grit entering the cylinder.**

3. Set the air gap at 0.6 to 0.7 mm (0.024 to 0.028 inch) as shown in Figure 39. Install the correctly gapped spark plug and tighten it firmly to 23 N·m (17 ft-lb).

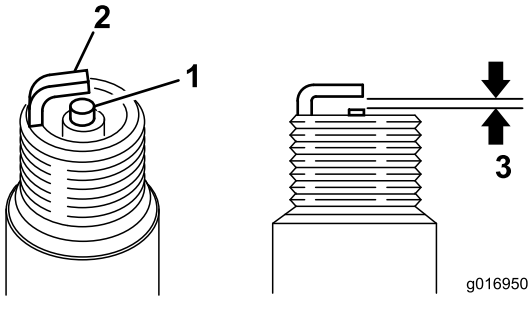

Figure 39

1. Center-electrode insulator
2. Side electrode
3. Air gap—0.6 to 0.7 mm (0.024 to 0.028 inch)

Fuel System Maintenance

Cleaning the Fuel Cup and Fuel-Tank Screen

Service Interval: After the first 20 hours

Every 100 hours/Monthly (whichever comes first)

1. Close the fuel shut off valve and unscrew the fuel cup from the filter body (Figure 40).

   Note: A 17 mm, 12 point socket fits over the body of the fuel cup and aids in the removal.

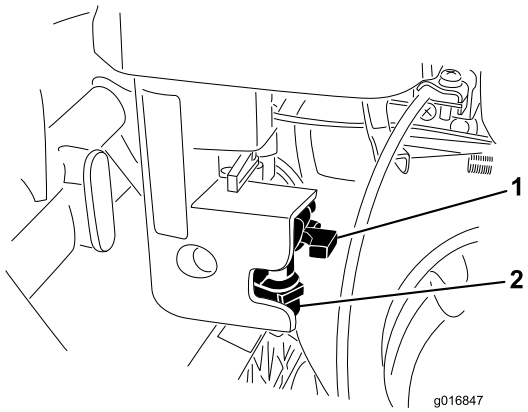

Figure 40

1. Shutoff valve
2. Fuel cup

2. Clean the fuel cup in clean fuel and install it.
3. Unscrew and remove the fuel-tank cap from the fuel tank (Figure 41).

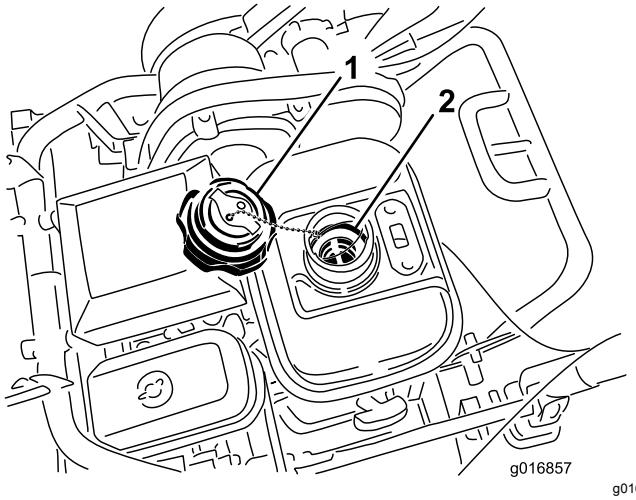

Figure 41

1. Fuel-tank cap
2. Fuel-tank screen

4. Remove the fuel-tank screen from inside the fuel tank.
5. Clean the screen in clean fuel and install it in the tank.
6. Install the fuel-tank cap to the fuel tank.

Replacing the Fuel Line

Service Interval: Every 1,000 hours

If fuel leaks from the line, replace it immediately.

Electrical System Maintenance

Servicing the Traction Interlock Switch

Use the following procedure if the switch needs adjustment or replacement.

1. Make sure that the engine is off.
2. Remove the control panel.
3. Engage the traction lever.

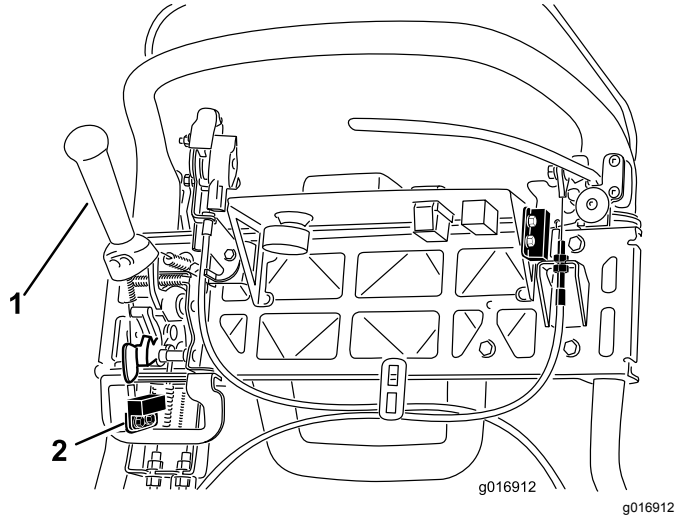

Figure 42

1. Traction lever
2. Interlock switch

4. Loosen the interlock switch mounting fasteners (Figure 42).
5. Place a 1.6 mm (0.062 inch) thick shim between the traction lever and the interlock switch (Figure 42).
6. Tighten the interlock switch mounting fasteners.
7. Engage the traction lever and check the gap. The normal operating range is between 0.76 to 3.05 mm (0.03 to 0.12 inch). With the traction lever engaged, verify that the switch loses continuity. Replace the switch if required.

Servicing the Brake-Interlock Switch

1. Make sure that the engine is off.
2. Remove the control panel.
3. Engage the service-brake lever and engage the parking-brake latch.
4. Loosen the interlock switch mounting fasteners (Figure 43).

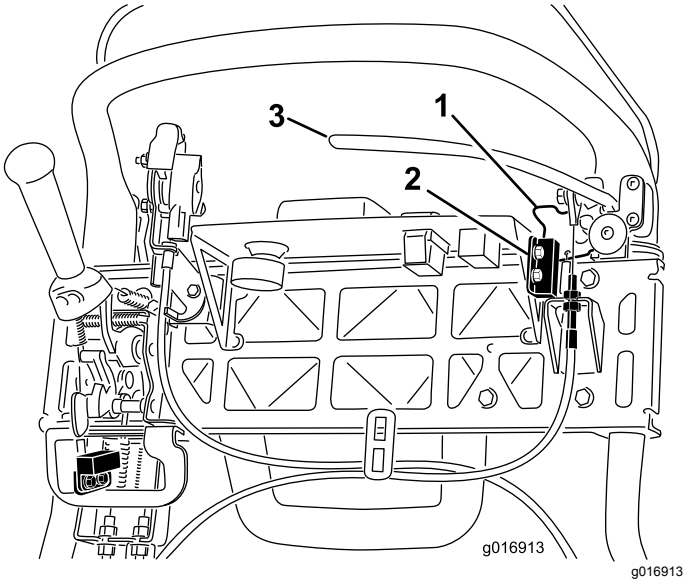

Figure 43

1. Parking-brake latch
2. Interlock switch
3. Service-brake lever

5. Place a 1.6 mm (0.062 inch) thick shim between the parking-brake latch and the interlock switch (Figure 43).
6. Tighten interlock switch mounting fasteners. Check the gap. The latch must not contact the switch.
7. Engage the brake lever and rotate the latch. Verify that the switch loses continuity. Replace the switch if required.

Brake Maintenance

Adjusting the Service/Parking Brake

If the service/parking brake slips when operated, adjust the cable as follows:

1. Move the service/parking brake lever to the OFF position.
2. Remove the control panel.
3. To increase the cable tension, loosen the upper cable jam nut and tighten the lower cable jam nut (Figure 44) until a force of 156 N (35 lb) applied to the brake lever handle is required to release the parking-brake latch. Do not over adjust it or the brake band may drag.

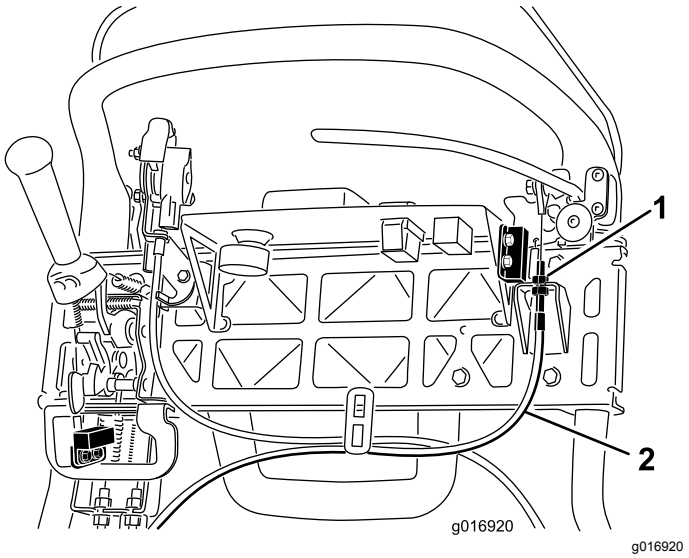

Figure 44

1. Jam nuts
2. Service-brake cable

Belt Maintenance

Inspecting the Reel-Drive Belt

Service Interval: Every 1,000 hours

1. Loosen the flange bolt securing the belt cover and remove the belt cover to expose the belt (Figure 45).

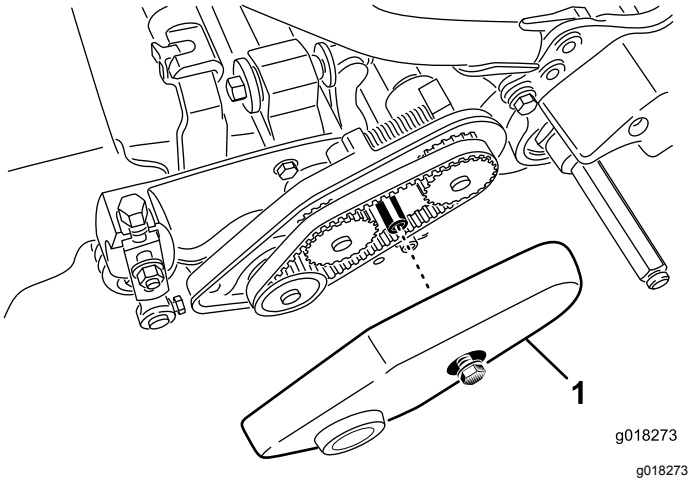

Figure 45

1. Belt cover

2. To adjust the belt tension:
   A. Loosen the bearing housing mounting nut (Figure 46).

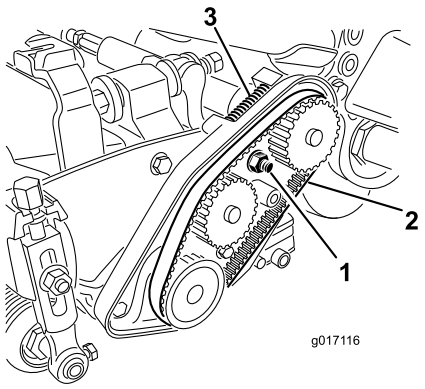

Figure 46

1. Bearing housing mounting nut
2. Reel-drive belt
3. Compression spring

   B. Using a 16 mm (5/8 inch) wrench, rotate the bearing housing to make sure that it operates freely.
   C. Clean any debris from inside the belt compartment and from around the compression spring (Figure 46).
   D. Make sure that the compression spring is applying the proper tension on the belt.
   E. Tighten the bearing housing mounting nut.
   F. Install the belt cover.

Visually Inspecting the Reel Clutch

Remove the rubber plug (Figure 47) from the hole in the front of the transmission to visually inspect the reel clutch when making adjustments.

Important: **Replace the plug when finished to prevent water and debris from contaminating the clutch.**

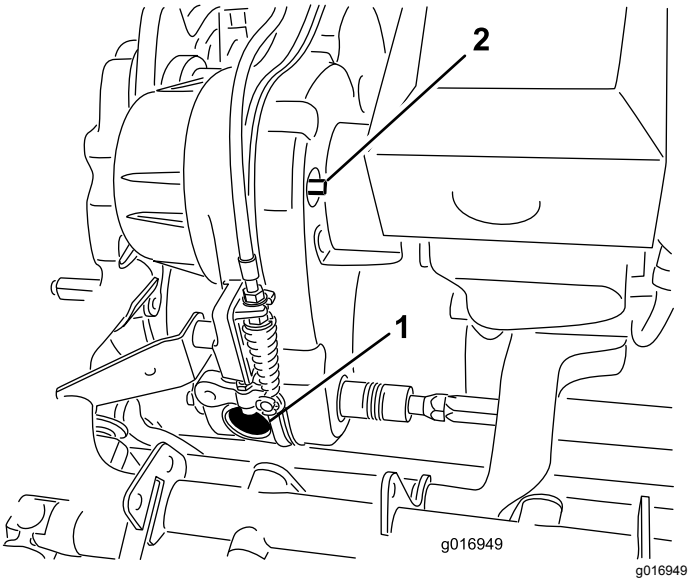

Figure 47

1. Rubber-hole plug
2. Engage/disengage shaft

Engaging/Disengaging the Transmission-Belt Tensioner

The transmission belt is tensioned by a spring loaded idler pulley. If you must engage or disengage the belt tension, use a 3/8 inch wrench to rotate the engage/disengage shaft (Figure 47) to the desired position. Rotating the shaft 1/4 turn clockwise disengages the idler from the belt (Figure 48).

Note: The belt tension must be disengaged prior to removing the transmission cover.

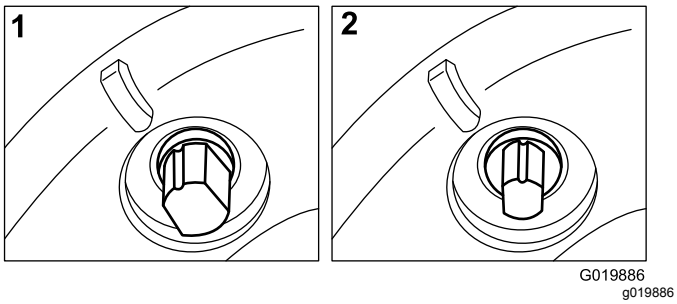

Figure 48

1. Engaged
2. Disengaged

Controls System Maintenance

Adjusting the Traction Control

Service Interval: Every 500 hours—Replace the clutch oil.

If the traction control does not engage or slips during operation, the traction control may need adjusting.

1. Move the traction control to the ENGAGED position.
2. Measure the distance from the pin on either end of the traction-control spring (Figure 49); if it is not within 7.3 to 7.6 cm (2-7/8 to 3 inches), adjust the clutch according to the steps below.

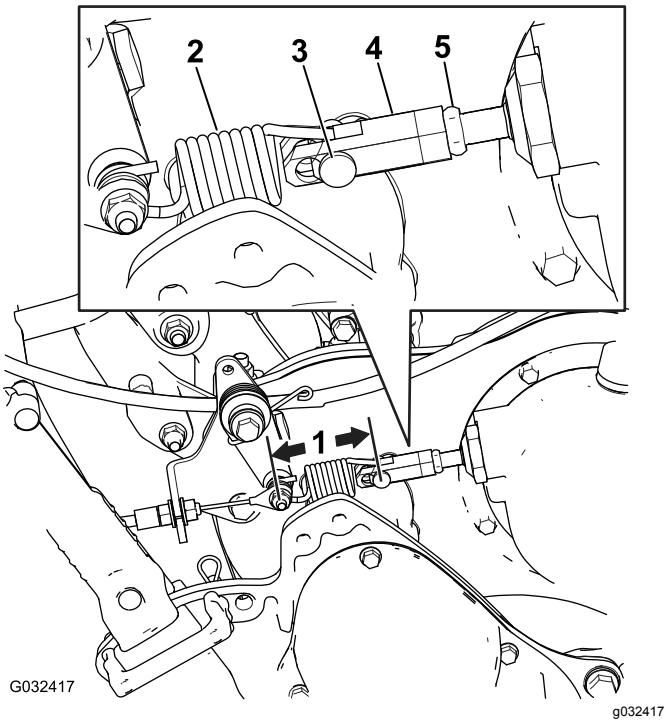

Figure 49

1. Measure this distance; should be 7.3 to 7.6 cm (2-7/8 to 3 inches)
2. Traction-control spring
3. Clevis pin
4. Turnbuckle
5. Jam nut

A. Disengage the traction-control lever.

B. Loosen the jam nut on the turnbuckle and remove the clevis pin, disconnecting the spring from the turnbuckle (Figure 49).

C. Turn the turnbuckle in or out to adjust the length as needed.

D. Install the turnbuckle to the spring using the clevis pin.

E. Move the traction control to the ENGAGED position.

F. Measure the distance from the pin on either end of the traction-control spring (Figure 49); repeat steps A through F until it is within 7.3 to 7.6 cm (2-7/8 to 3 inches).

Adjusting the Reel Control

If the reel control does not properly engage, an adjustment is required.

1. Ensure that the reel control is disengaged.
2. At the transmission bulkhead, adjust the reel-control cable (Figure 50) to attain a spring length of 70.6 to 72.4 mm (2.78 to 2.85 inches).

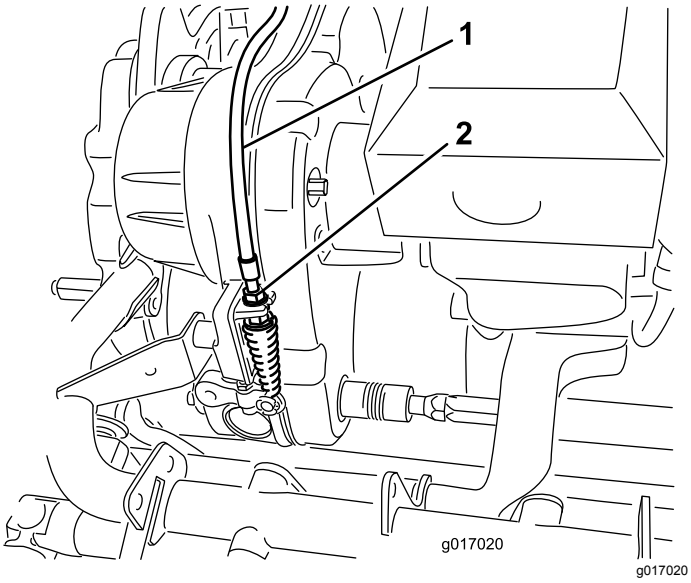

Figure 50

1. Reel-control cable
2. Jam nuts

3. At the control handle bulkhead, loosen the reel-control cable until there is slack in the cable (Figure 51).

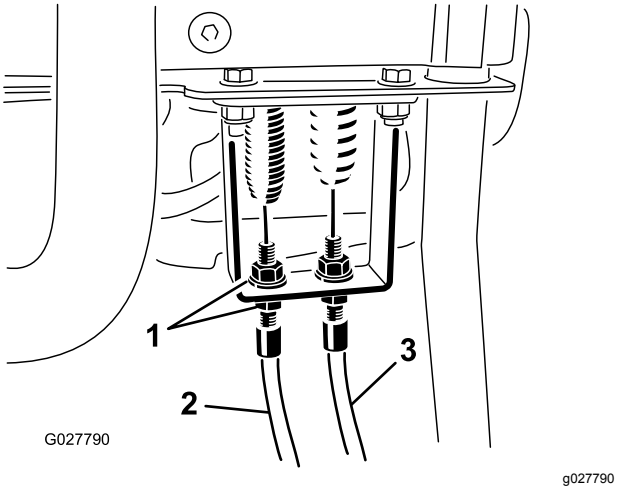

Figure 51

1. Jam nuts
2. Traction-control cable
3. Reel-control cable

4. At the control handle bulkhead, tighten the reel-control cable enough to remove the slack from the cable without extending the spring.
5. Check the operation as follows:
   - Verify that the reel clutch teeth disengage when the clutch is released and the reel clutch teeth do not bottom out when engaged.

     Note: Remove the rubber plug (Figure 47) from the hole in the front of the transmission to view reel clutch.
   - The reel stopping time must be less than 7 seconds with the reel to bedknife backed off.
   - Refer to the *Service Manual* or contact your authorized Toro distributor for further assistance.

Storage

1. Remove any grass clippings, dirt, and grime from the external parts of the entire machine, especially the engine. Clean the dirt and chaff from the outside of the engine cylinder-head fins and the blower housing.

   Important: **You can wash the machine with mild detergent and water. Do not pressure wash the machine. Avoid excessive use of water, especially near the shift lever plate, and the engine.**

2. For long-term storage (more than 30 days) add stabilizer/conditioner additive to the fuel in the tank.

   A. Run the engine to distribute conditioned fuel through the fuel system (5 minutes).

   B. Either shut off the engine, allow it to cool, and drain the fuel tank, or operate the engine until it shuts off.

   C. Start the engine and run it until it shuts off. Repeat, on CHOKE, until the engine no longer starts.

   D. Dispose of fuel properly. Recycle according to local codes.

      Note: Do not store stabilizer/conditioned fuel over 90 days.

3. Check and tighten all bolts, nuts, and screws. Repair or replace any part that is worn or damaged.

4. Paint all scratched or bare metal surfaces. Paint is available from your authorized Toro distributor.

5. Store the machine in a clean, dry garage or storage area. Cover the machine to protect it and keep it clean.

Notes:

Notes:

International Distributor List

Distributor:	Country:	Phone Number:	Distributor:	Country:	Phone Number:
Agrolanc Kft	Hungary	36 27 539 640	Maquiver S.A.	Colombia	57 1 236 4079
Asian American Industrial (AAI)	Hong Kong	852 2497 7804	Maruyama Mfg. Co. Inc.	Japan	81 3 3252 2285
B-Ray Corporation	Korea	82 32 551 2076	Mountfield a.s.	Czech Republic	420 255 704 220
Brisa Goods LLC	Mexico	1 210 495 2417	Mountfield a.s.	Slovakia	420 255 704 220
Casco Sales Company	Puerto Rico	787 788 8383	Munditol S.A.	Argentina	54 11 4 821 9999
Ceres S.A.	Costa Rica	506 239 1138	Norma Garden	Russia	7 495 411 61 20
CSSC Turf Equipment (pvt) Ltd.	Sri Lanka	94 11 2746100	Oslinger Turf Equipment SA	Ecuador	593 4 239 6970
Cyril Johnston & Co.	Northern Ireland	44 2890 813 121	Oy Hako Ground and Garden Ab	Finland	358 987 00733
Cyril Johnston & Co.	Republic of Ireland	44 2890 813 121	Parkland Products Ltd.	New Zealand	64 3 34 93760
Fat Dragon	China	886 10 80841322	Perfetto	Poland	48 61 8 208 416
Femco S.A.	Guatemala	502 442 3277	Pratoverde SRL.	Italy	39 049 9128 128
FIVEMANS New-Tech Co., Ltd	China	86-10-6381 6136	Prochaska & Cie	Austria	43 1 278 5100
ForGarder OU	Estonia	372 384 6060	RT Cohen 2004 Ltd.	Israel	972 986 17979
G.Y.K. Company Ltd.	Japan	81 726 325 861	Riversa	Spain	34 9 52 83 7500
Geomechaniki of Athens	Greece	30 10 935 0054	Lely Turfcare	Denmark	45 66 109 200
Golf international Turizm	Turkey	90 216 336 5993	Lely (U.K.) Limited	United Kingdom	44 1480 226 800
Hako Ground and Garden	Sweden	46 35 10 0000	Solvert S.A.S.	France	33 1 30 81 77 00
Hako Ground and Garden	Norway	47 22 90 7760	Spypros Stavrinides Limited	Cyprus	357 22 434131
Hayter Limited (U.K.)	United Kingdom	44 1279 723 444	Surge Systems India Limited	India	91 1 292299901
Hydroturf Int. Co Dubai	United Arab Emirates	97 14 347 9479	T-Markt Logistics Ltd.	Hungary	36 26 525 500
Hydroturf Egypt LLC	Egypt	202 519 4308	Toro Australia	Australia	61 3 9580 7355
Irrimac	Portugal	351 21 238 8260	Toro Europe NV	Belgium	32 14 562 960
Irrigation Products Int'l Pvt Ltd.	India	0091 44 2449 4387	Valtech	Morocco	212 5 3766 3636
Jean Heybroek b.v.	Netherlands	31 30 639 4611	Victus Emak	Poland	48 61 823 8369

European Privacy Notice

The Information Toro Collects
Toro Warranty Company (Toro) respects your privacy. In order to process your warranty claim and contact you in the event of a product recall, we ask you to share certain personal information with us, either directly or through your local Toro company or dealer.

The Toro warranty system is hosted on servers located within the United States where privacy law may not provide the same protection as applies in your country.

BY SHARING YOUR PERSONAL INFORMATION WITH US, YOU ARE CONSENTING TO THE PROCESSING OF YOUR PERSONAL INFORMATION AS DESCRIBED IN THIS PRIVACY NOTICE.

The Way Toro Uses Information
Toro may use your personal information to process warranty claims, to contact you in the event of a product recall and for any other purpose which we tell you about. Toro may share your information with Toro's affiliates, dealers or other business partners in connection with any of these activities. We will not sell your personal information to any other company. We reserve the right to disclose personal information in order to comply with applicable laws and with requests by the appropriate authorities, to operate our systems properly or for our own protection or that of other users.

Retention of your Personal Information
We will keep your personal information as long as we need it for the purposes for which it was originally collected or for other legitimate purposes (such as regulatory compliance), or as required by applicable law.

Toro's Commitment to Security of Your Personal Information
We take reasonable precautions in order to protect the security of your personal information. We also take steps to maintain the accuracy and current status of personal information.

Access and Correction of your Personal Information
If you would like to review or correct your personal information, please contact us by email at legal@toro.com.

Australian Consumer Law

Australian customers will find details relating to the Australian Consumer Law either inside the box or at your local Toro Dealer.

Toro General Commercial Product Warranty

A Two-Year Limited Warranty

Conditions and Products Covered

The Toro Company and its affiliate, Toro Warranty Company, pursuant to an agreement between them, jointly warrant your Toro Commercial product ("Product") to be free from defects in materials or workmanship for two years or 1500 operational hours*, whichever occurs first. This warranty is applicable to all products with the exception of Aerators (refer to separate warranty statements for these products). Where a warrantable condition exists, we will repair the Product at no cost to you including diagnostics, labor, parts, and transportation. This warranty begins on the date the Product is delivered to the original retail purchaser.
* Product equipped with an hour meter.

Instructions for Obtaining Warranty Service

You are responsible for notifying the Commercial Products Distributor or Authorized Commercial Products Dealer from whom you purchased the Product as soon as you believe a warrantable condition exists. If you need help locating a Commercial Products Distributor or Authorized Dealer, or if you have questions regarding your warranty rights or responsibilities, you may contact us at:

Toro Commercial Products Service Department
Toro Warranty Company
8111 Lyndale Avenue South
Bloomington, MN 55420-1196

952–888–8801 or 800–952–2740
E-mail: commercial.warranty@toro.com

Owner Responsibilities

As the Product owner, you are responsible for required maintenance and adjustments stated in your *Operator's Manual*. Failure to perform required maintenance and adjustments can be grounds for disallowing a warranty claim.

Items and Conditions Not Covered

Not all product failures or malfunctions that occur during the warranty period are defects in materials or workmanship. This warranty does not cover the following:

- Product failures which result from the use of non-Toro replacement parts, or from installation and use of add-on, or modified non-Toro branded accessories and products. A separate warranty may be provided by the manufacturer of these items.
- Product failures which result from failure to perform recommended maintenance and/or adjustments. Failure to properly maintain your Toro product per the Recommended Maintenance listed in the *Operator's Manual* can result in claims for warranty being denied.
- Product failures which result from operating the Product in an abusive, negligent, or reckless manner.
- Parts subject to consumption through use unless found to be defective. Examples of parts which are consumed, or used up, during normal Product operation include, but are not limited to, brake pads and linings, clutch linings, blades, reels, rollers and bearings (sealed or greasable), bed knives, spark plugs, castor wheels and bearings, tires, filters, belts, and certain sprayer components such as diaphragms, nozzles, and check valves, etc.
- Failures caused by outside influence. Conditions considered to be outside influence include, but are not limited to, weather, storage practices, contamination, use of unapproved fuels, coolants, lubricants, additives, fertilizers, water, or chemicals, etc.
- Failure or performance issues due to the use of fuels (e.g. gasoline, diesel, or biodiesel) that do not conform to their respective industry standards.
- Normal noise, vibration, wear and tear, and deterioration.
- Normal "wear and tear" includes, but is not limited to, damage to seats due to wear or abrasion, worn painted surfaces, scratched decals or windows, etc.

Parts

Parts scheduled for replacement as required maintenance are warranted for the period of time up to the scheduled replacement time for that part. Parts replaced under this warranty are covered for the duration of the original product warranty and become the property of Toro. Toro will make the final decision whether to repair any existing part or assembly or replace it. Toro may use remanufactured parts for warranty repairs.

Deep Cycle and Lithium-Ion Battery Warranty:

Deep cycle and Lithium-Ion batteries have a specified total number of kilowatt-hours they can deliver during their lifetime. Operating, recharging, and maintenance techniques can extend or reduce total battery life. As the batteries in this product are consumed, the amount of useful work between charging intervals will slowly decrease until the battery is completely worn out. Replacement of worn out batteries, due to normal consumption, is the responsibility of the product owner. Battery replacement may be required during the normal product warranty period at owner's expense. Note: (Lithium-Ion battery only): A Lithium-Ion battery has a part only prorated warranty beginning year 3 through year 5 based on the time in service and kilowatt hours used. Refer to the *Operator's Manual* for additional information.

Maintenance is at Owner's Expense

Engine tune-up, lubrication, cleaning and polishing, replacement of filters, coolant, and completing recommended maintenance are some of the normal services Toro products require that are at the owner's expense.

General Conditions

Repair by an Authorized Toro Distributor or Dealer is your sole remedy under this warranty.

Neither The Toro Company nor Toro Warranty Company is liable for indirect, incidental or consequential damages in connection with the use of the Toro Products covered by this warranty, including any cost or expense of providing substitute equipment or service during reasonable periods of malfunction or non-use pending completion of repairs under this warranty. Except for the Emissions warranty referenced below, if applicable, there is no other express warranty. All implied warranties of merchantability and fitness for use are limited to the duration of this express warranty.

Some states do not allow exclusions of incidental or consequential damages, or limitations on how long an implied warranty lasts, so the above exclusions and limitations may not apply to you. This warranty gives you specific legal rights, and you may also have other rights which vary from state to state.

Note regarding engine warranty:

The Emissions Control System on your Product may be covered by a separate warranty meeting requirements established by the U.S. Environmental Protection Agency (EPA) and/or the California Air Resources Board (CARB). The hour limitations set forth above do not apply to the Emissions Control System Warranty. Refer to the Engine Emission Control Warranty Statement supplied with your product or contained in the engine manufacturer's documentation for details

Countries Other than the United States or Canada

Customers who have purchased Toro products exported from the United States or Canada should contact their Toro Distributor (Dealer) to obtain guarantee policies for your country, province, or state. If for any reason you are dissatisfied with your Distributor's service or have difficulty obtaining guarantee information, contact the Toro importer.

374-0253 Rev C