Form No. 3401-886 Rev B

TORO®

Count on it.

Operator's Manual

Groundsmaster® 4100 Rotary Mower

Model No. 30608—Serial No. 315000001 and Up

Register at www.Toro.com.
Original Instructions (EN)

CE

3401-886 B

This product complies with all relevant European directives; for details, please see the separate product specific Declaration of Conformity (DOC) sheet.

WARNING

CALIFORNIA
Proposition 65 Warning

Diesel engine exhaust and some of its constituents are known to the State of California to cause cancer, birth defects, and other reproductive harm.

Genuine Toro spark arresters are approved by the USDA Forestry Service.

It is a violation of California Public Resource Code Section 4442 or 4443 to use or operate the engine on any forest-covered, brush-covered, or grass-covered land unless the engine is equipped with a spark arrester, as defined in Section 4442, maintained in effective working order or the engine is constructed, equipped, and maintained for the prevention of fire.

Introduction

This machine is a ride-on, rotary-blade lawn mower intended to be used by professional, hired operators in commercial applications. It is primarily designed for cutting grass on well-maintained lawns in parks, sports fields, and on commercial grounds. It is not designed for cutting brush, mowing grass and other growth alongside highways, or for agricultural uses.

Read this information carefully to learn how to operate and maintain your product properly and to avoid injury and product damage. You are responsible for operating the product properly and safely.

You may contact Toro directly at www.Toro.com for product safety and operation training materials, accessory information, help finding a dealer, or to register your product.

Whenever you need service, genuine Toro parts, or additional information, contact an Authorized Service Dealer or Toro Customer Service and have the model and serial numbers of your product ready. Figure 1 identifies the location of the model and serial numbers on the product. Write the numbers in the space provided.

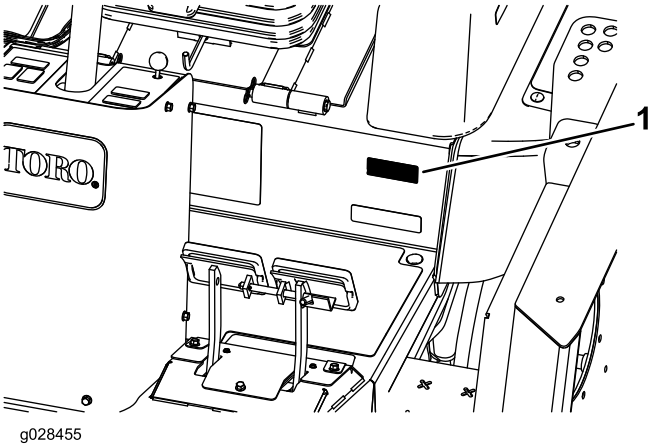

g028455

Figure 1

1. Model and serial number location

Model No. _____

Serial No. _____

This manual identifies potential hazards and has safety messages identified by the safety-alert symbol (Figure 2), which signals a hazard that may cause serious injury or death if you do not follow the recommended precautions.



g000502

Figure 2

1. Safety-alert symbol

This manual uses 2 words to highlight information. **Important** calls attention to special mechanical information and **Note** emphasizes general information worthy of special attention.

© 2017—The Toro® Company
8111 Lyndale Avenue South
Bloomington, MN 55420

Contact us at www.Toro.com.
Printed in the USA
All Rights Reserved

Contents

Safety 4
General Safety 4
Sound Power Level 4
Sound Pressure Level 5
Vibration Level 5
Engine Emission Certification 5
Safety and Instructional Decals 5
Setup 13
1 Greasing the Machine 13
2 Replacing the Warning Decal 13
3 Checking the Tire Pressure 13
4 Checking the Fluid Levels 14
Product Overview 14
Controls 14
Specifications 21
Attachments/Accessories 21
Before Operation 22
Before Operation Safety 22
Checking the Engine-Oil Level 23
Checking the Cooling System 23
Checking the Hydraulic System 23
Filling the Fuel Tank 23
Checking the Tire Pressure 24
Checking the Torque of the Wheel-Lug Nuts 25
Adjusting the Rollover Protection System (ROPS) 25
Adjusting the Height of Cut 26
Adjusting the Skids 28
Adjusting the Mower-Deck Rollers 29
Adjusting the Blade 29
Correcting a Mismatch Between Mower Decks 29
Checking the Safety-Interlock Switches 31
During Operation 31
During Operation Safety 31
Starting and Stopping the Engine 32
Understanding Smart Power™ Traction 33
Reversing Fan Operation 33
Understanding Auto Idle 33
Cutting Grass with the Machine 33
Diesel Particulate Filter Regeneration 34
Using Cruise Control 42
Using the Engine-Speed Switch 42
Adjusting the Mowing Speed 42
Adjusting the Transport Speed 42
Understanding the Operating Characteristics of the Machine 43
Operating Tips 43
After Operation 44
After Operation Safety 44
Pushing or Towing the Machine 44
Locating the Jacking Points 45
Hauling the Machine 45
Locating the Tie-Down Points 45
Maintenance 46
Recommended Maintenance Schedule(s) 46
Daily Maintenance Checklist 47
Service Interval Chart 49
Pre-Maintenance Procedures 49
Pre-Maintenance Safety 49
Preparing the Machine for Maintenance 50
Removing the Hood 50
Lubrication 51
Greasing the Bearings and Bushings 51
Engine Maintenance 53
Engine Safety 53
Servicing the Air Cleaner 53
Servicing the Engine Oil 54
Servicing the Diesel-Oxidation Catalyst (DOC) and the Soot Filter 56
Fuel System Maintenance 56
Servicing the Water Separator 56
Servicing the Fuel System 57
Electrical System Maintenance 57
Electrical System Safety 57
Servicing the Battery 57
Locating the Fuses 59
Drive System Maintenance 59
Checking the Planetary-Gear-Drive Oil 59
Changing the Planetary-Gear-Drive Oil 60
Checking the Rear-Axle-Gearbox Lubricant 60
Changing the Rear-Axle Lubricant 61
Checking the Rear Wheel Toe-In 62
Changing the Front Tires 62
Adjusting the Traction-Pedal Angle 62
Cooling System Maintenance 62
Cooling System Safety 62
Checking the Cooling System 62
Servicing the Engine-Cooling System 63
Brake Maintenance 64
Adjusting the Service Brakes 64
Belt Maintenance 65
Servicing the Alternator Belt 65
Tensioning the Blade-Drive Belts 65
Replacing the Blade-Drive Belt 65
Hydraulic System Maintenance 66
Hydraulic System Safety 66
Checking the Hydraulic Fluid 66
Changing the Hydraulic Fluid 68
Replacing the Hydraulic Filters 68
Checking the Hydraulic Lines and Hoses 68
Adjusting the Counterbalance Pressure 69
Mower Maintenance 69
Pivoting (Tilting) the Center Mower Deck to the Upright Position 69
Pivoting the Center Mower Deck Down 70
Adjusting the Mower-Deck Pitch 70
Servicing the Caster-Arm Bushings 71

Servicing the Caster Wheels and Bearings 71
Replacing the Mower-Deck-Hinge Covers 72
Blade Maintenance 73
Blade Safety 73
Checking for a Bent Blade 73
Removing and Installing the Mower Blade(s) 73
Inspecting and Sharpening the Mower Blade(s) 74
Correcting a Mower-Deck Mismatch 75
Storage 76
Preparing for Seasonal Storage 76

Safety

This machine has been designed in accordance with EN ISO 5395:2013 and ANSI B71.4-2012.

Improper use or maintenance by the operator or owner can result in injury. To reduce the potential for injury, comply with these safety instructions and always pay attention to the safety alert symbol, which means Caution, Warning, or Danger—personal safety instruction. Failure to comply with the instruction may result in personal injury or death.

General Safety

This product is capable of amputating hands and feet and of throwing objects. Always follow all safety instructions to avoid serious personal injury.

Using this product for purposes other than its intended use could prove dangerous to you and bystanders.

- Read and understand the contents of this *Operator's Manual* before you start the engine. Ensure that everyone using this product knows how to use it and understands the warnings.
- Do not put your hands or feet near moving components of the machine.
- Do not operate the machine without all guards and other safety protective devices in place and working on the machine.
- Keep clear of any discharge opening. Keep bystanders a safe distance from the machine.
- Keep children out of the operating area. Never allow children to operate the machine.
- Stop the machine and shut off the engine before servicing, fueling, or unclogging the machine.

Improperly using or maintaining the machine can result in injury. To reduce the potential for injury, comply with these safety instructions and always pay attention to the safety-alert symbol, which means Caution, Warning, or Danger—personal safety instruction. Failure to comply with these instructions may result in personal injury or death.

You can find additional items of safety information in their respective sections throughout this manual.

Sound Power Level

This unit has a guaranteed sound power level of 105 dBA, which includes an Uncertainty Value (K) of 1 dBA.

Sound power level was determined according to the procedures outlined in ISO 11094.

Sound Pressure Level

This unit has a sound pressure level at the operator's ear of
94 dBA, which includes an Uncertainty Value (K) of 1 dBA.

Sound pressure level was determined according to the procedures outlined in EN ISO 5395:2013.

Vibration Level

Hand-Arm

Measured vibration level for right hand = .92 m/s^2

Measured vibration level for left hand = 1 m/s^2

Uncertainty Value (K) = 0.5 m/s^2

Measured values were determined according to the procedures outlined in EN ISO 5395:2013.

Whole Body

Measured vibration level = 0.34 m/s^2

Uncertainty Value (K) = 0.17 m/s^2

Measured values were determined according to the procedures outlined in EN ISO 5395:2013.

Engine Emission Certification

The engine in this machine is EPA Tier 4 final and EU Stage 3b compliant.

Safety and Instructional Decals

Safety decals and instructions are easily visible to the operator and are located near any area of potential danger. Replace any decal that is damaged or lost.



decal58-6520

58-6520

1. Grease

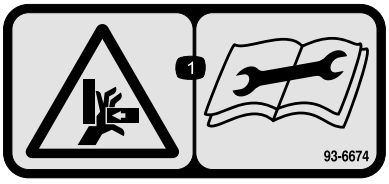

decal93-6674

93-6674

1. Crushing hazard, hand—read the instructions before servicing or performing maintenance.

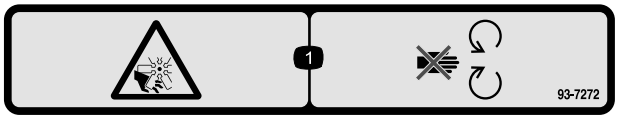

decal93-7272

93-7272

1. Cutting/dismemberment hazard; fan—stay away from moving parts.

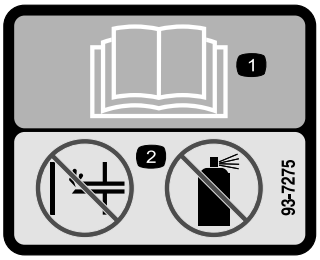

decal93-7275

93-7275

1. Read the *Operator's Manual.*
2. Do not use starting aids.

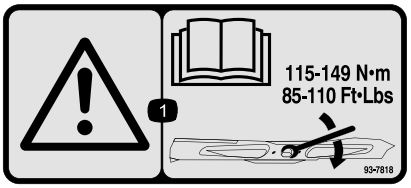

decal93-7818

93-7818

1. Warning—read the *Operator's Manual* for instructions on torquing the blade bolt/nut to 115 to 149 N·m (85 to 110 ft-lb).



decal98-4387

98-4387

1. Warning—wear hearing protection.

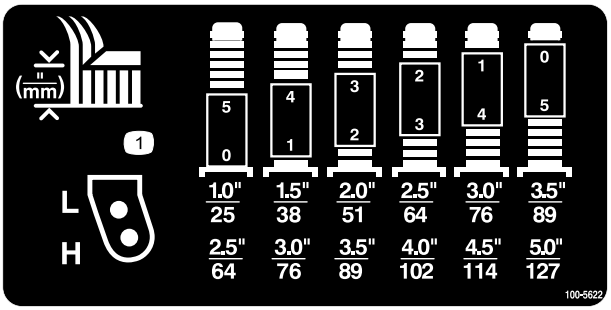

decal100-5622

100-5622

1. Height-of-cut adjustment

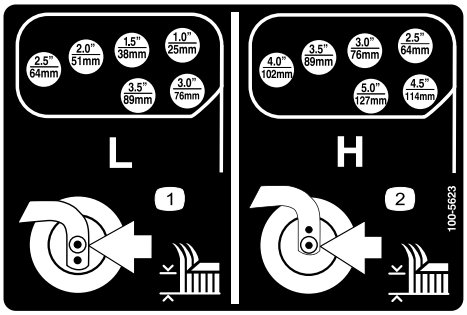

decal100-5623

100-5623

1. Low height-of-cut adjustment
2. High height-of-cut adjustment

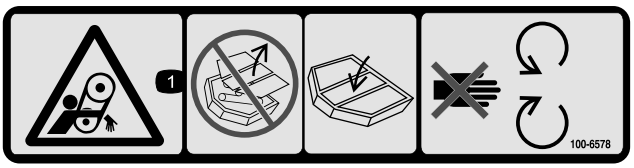

decal100-6578

100-6578

1. Entanglement hazard, belt—do not operate the machine with the shields or guards removed; always keep the shields and guards in place; stay away from moving parts.

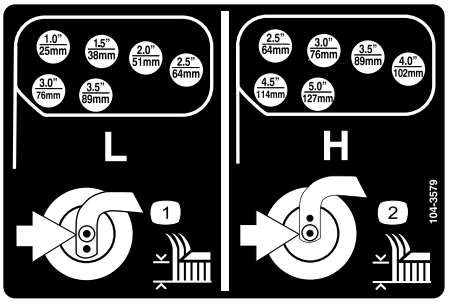

decal104-3579

104-3579

1. Low height-of-cut adjustment
2. High height-of-cut adjustment

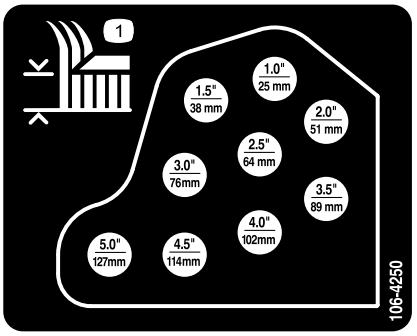

decal106-4250

106-4250

1. Height of cut

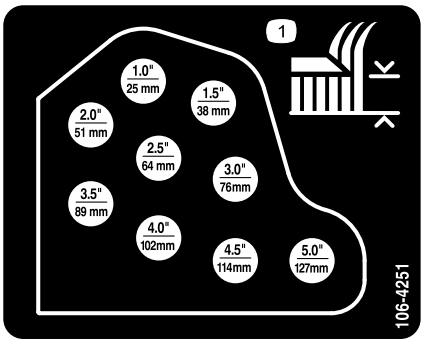

decal106-4251

106-4251

1. Height of cut

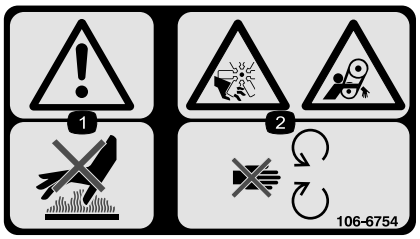

decal106-6754

106-6754

1. Warning—do not touch the hot surface.
2. Cutting/dismemberment hazard, fan and entanglement hazard, belt—stay away from moving parts.

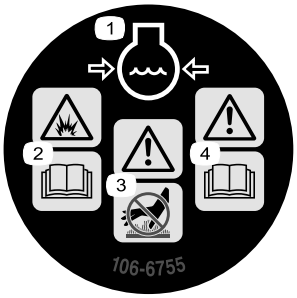

decal106-6755

106-6755

1. Engine coolant under pressure.
2. Explosion hazard—read the *Operator's Manual.*
3. Warning—do not touch the hot surface.
4. Warning—read the *Operator's Manual.*



decal114-0845

114-0845

1. Steering-wheel tilt lever
2. Horn

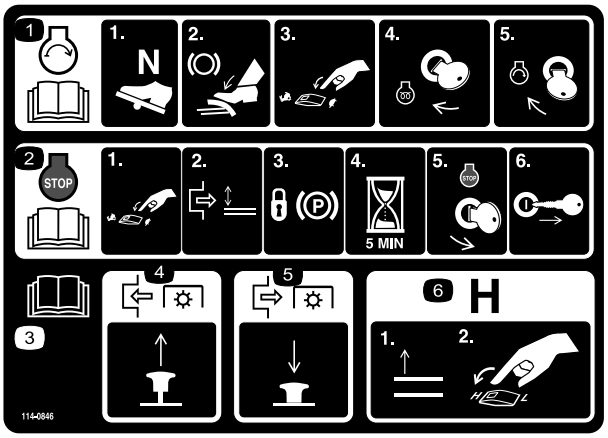

decal114-0846

114-0846

1. Read the *Operator's Manual* for information on starting the engine—1) Set to neutral; 2) Engage the brake; 3) Set the engine speed to slow; 4) Turn the ignition key to preheat; 5) Turn the ignition key to engine start.
2. Read the *Operator's Manual* for information on stopping the engine—1) Set the engine speed to slow; 2) Disengage the deck; 3) Lock the parking brake; 4) Wait 5 minutes; 5) Turn the ignition key to engine stop; 6)Remove the key from the ignition.
3. Read the *Operator's Manual*.
4. Pull the knob out to engage the PTO.
5. Push the knob in to disengage the PTO.
6. Raise the decks to go to H range.

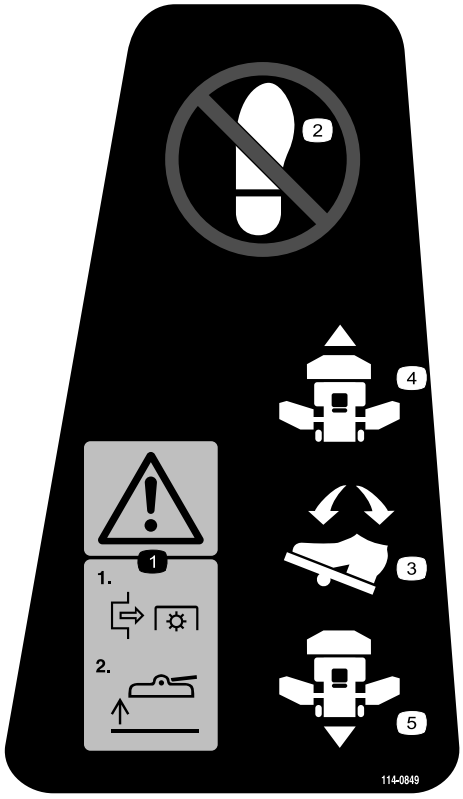

decal114-0849

114-0849

1. Warning—1) Disengage the PTO; 2) Raise the deck.
2. Do not place your foot here.
3. Direction pedal
4. Forward direction
5. Reverse direction

CALIFORNIA SPARK ARRESTER WARNING
Operation of this equipment may create sparks that can start fires around dry vegetation. A spark arrester may be required. The operator should contact local fire agencies for laws or regulations relating to fire prevention requirements. 117-2718

decal117-2718

117-2718

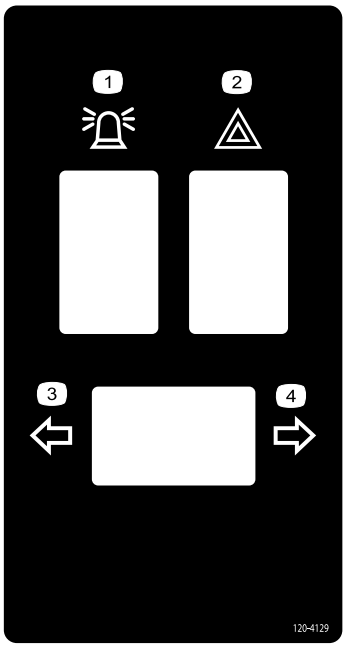

decal120-4129

120-4129

1. Beacon
2. Hazard light
3. Left-turn signal
4. Right-turn signal

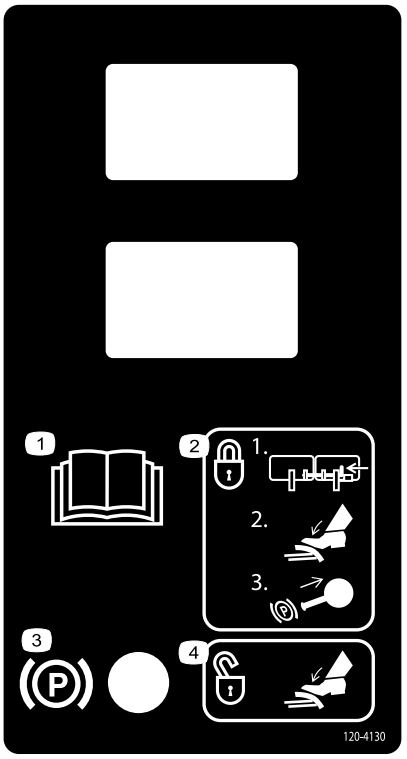

decal120-4130

120-4130

1. Read the *Operator's Manual*.
2. To engage the parking brake—1) Lock the pedals together; 2) Push down on the brake; 3) Pull out the parking brake knob.
3. Parking brake
4. To disengage the parking brake, push down on the brake pedal.

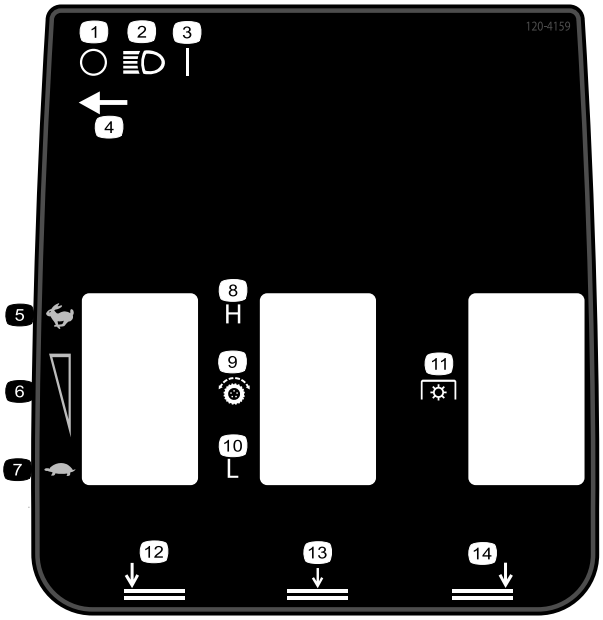

decal120-4159

120-4159

1. Off
2. Lights
3. On
4. Light-switch location
5. Fast
6. Variable-speed adjustment
7. Slow
8. High
9. Traction drive
10. Low
11. Power takeoff (PTO)
12. Lower, left deck
13. Lower, center deck
14. Lower, right deck

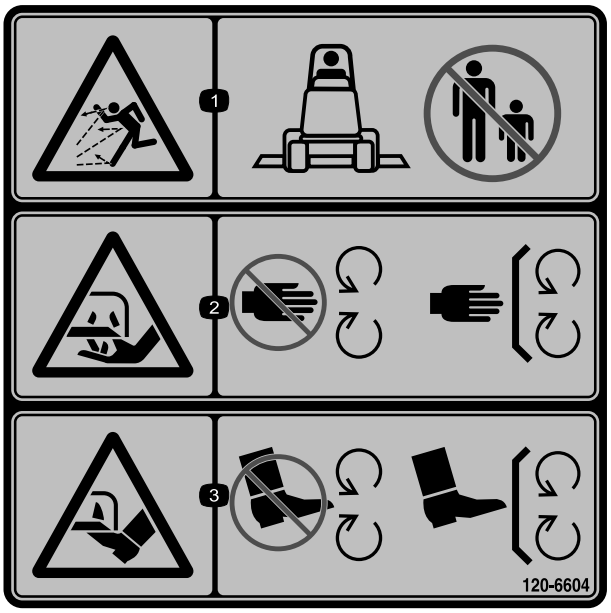

decal120-6604

120-6604

1. Thrown object hazard—keep bystanders away from the machine.
2. Cutting/dismemberment hazard of hand, mower blade—stay away from moving parts, keep all guards and shields in place.
3. Cutting/dismemberment hazard of foot, mower blade—stay away from moving parts, keep all guards and shields in place.

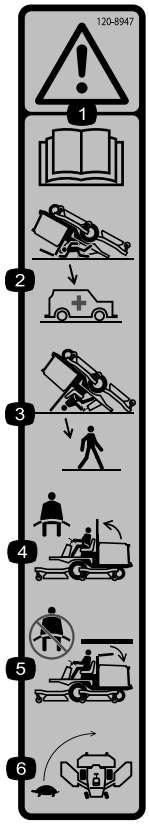

decal120-8947

120-8947

1. Warning—read the *Operator's Manual*.
2. There is no rollover protection when the roll bar is down.
3. There is rollover protection when the roll bar is up.
4. If the roll bar is raised, wear the seat belt.
5. If the roll bar is lowered, do not wear the seat belt.
6. Drive slowly when turning.

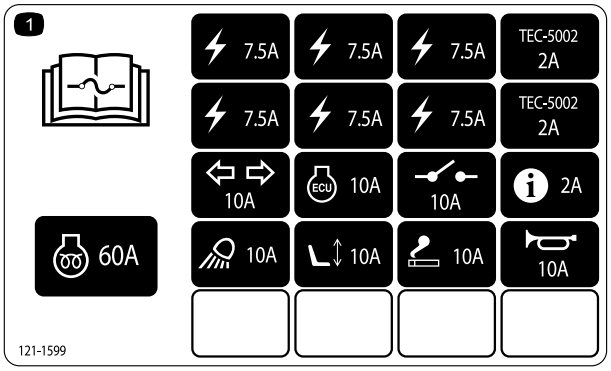

decal121-1599

121-1599

1. Read the *Operator's Manual* for information on fuses.

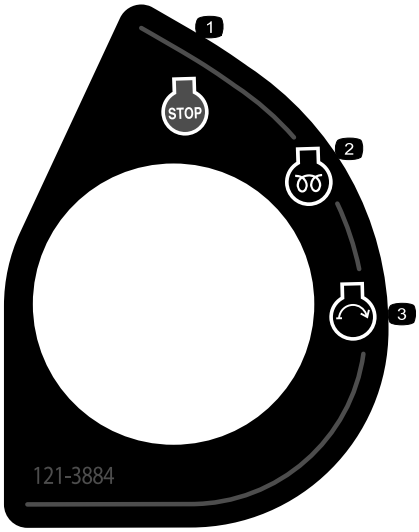

decal121-3884

121-3884

1. Engine—stop
2. Engine—preheat
3. Engine—start

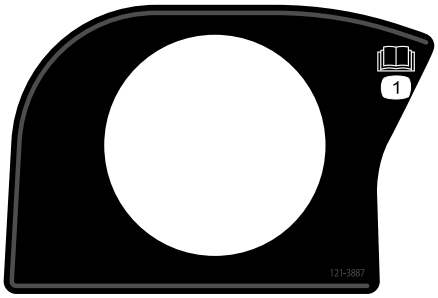

decal121-3887

121-3887

1. Read the *Operator's Manual*.

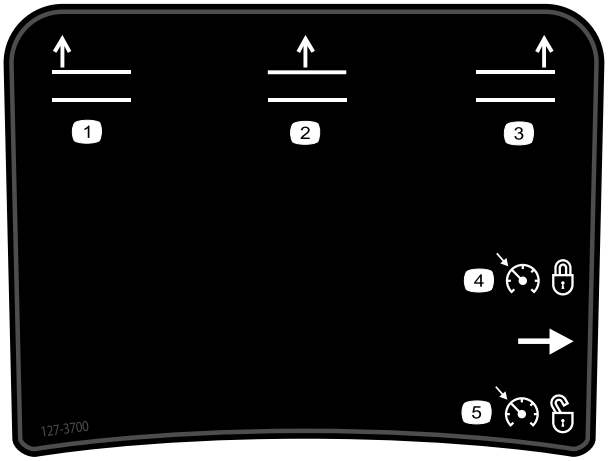

decal127-3700

127-3700

1. Raise the left deck
2. Raise the center deck
3. Raise the right deck
4. Lock the engine speed
5. Unlock the engine speed



decalbatterysymbols

Battery Symbols

Some or all of these symbols are on your battery.

1. Explosion hazard
2. No fire, open flame, or smoking.
3. Caustic liquid/chemical burn hazard
4. Wear eye protection.
5. Read the *Operator's Manual.*
6. Keep bystanders a safe distance from the battery.
7. Wear eye protection; explosive gases can cause blindness and other injuries.
8. Battery acid can cause blindness or severe burns.
9. Flush eyes immediately with water and get medical help fast.
10. Contains lead; do not discard.

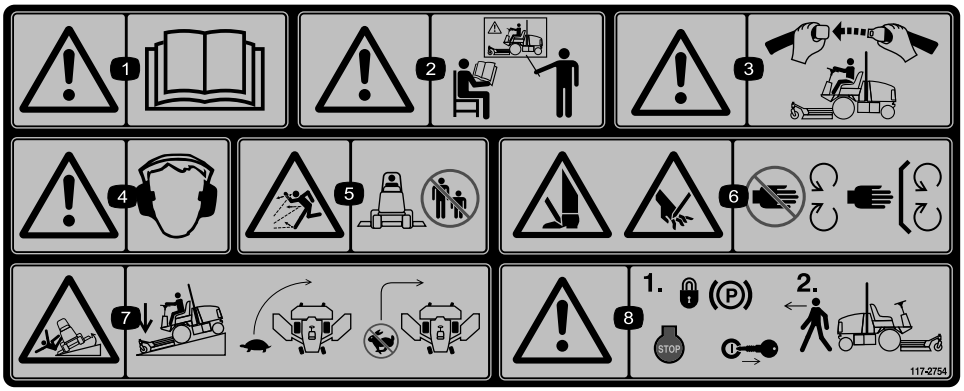

decal117-2754

117-2754

1. Warning—read the *Operator's Manual.*
2. Warning—do not operate this machine unless you are trained.
3. Warning—wear the seat belt when seated in the operator's position.
4. Warning—wear hearing protection.
5. Thrown object hazard—keep bystanders a safe distance from the machine.
6. Cutting hazard of hand or foot—stay away from moving parts; keep all guards in place.
7. Tipping hazard—lower the cutting unit when driving down slopes; slow machine before turning, do not turn at high speeds
8. Warning—lock the parking brake, stop the engine and remove the ignition key before leaving the machine.

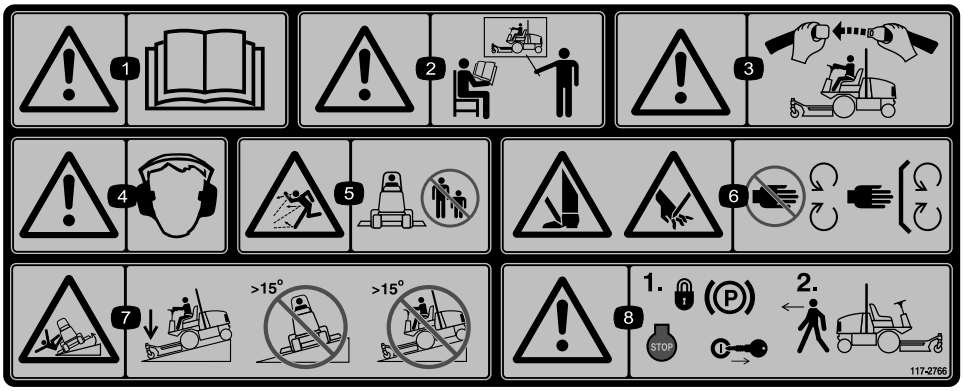

decal117-2766

117-2766

(Affix over Part No. 117-2754 for CE*)

* This safety decal includes a slope warning required on the machine for compliance to the European Lawn Mower Safety Standard EN836:1997. The conservative maximum slope angles indicated for operation of this machine are prescribed by and required by this standard.

1. Warning—read the *Operator's Manual.*
2. Warning—do not operate this machine unless you are trained.
3. Warning—wear the seat belt when seated in the operator's position.
4. Warning—wear hearing protection.
5. Thrown object hazard—keep bystanders a safe distance from the machine.
6. Cutting hazard of hand or foot—stay away from moving parts; keep all guards in place.
7. Tipping hazard—lower the cutting unit when driving down slopes; do not operate machine on slopes greater than 15 degrees.
8. Warning—lock the parking brake, stop the engine and remove the ignition key before leaving the machine.

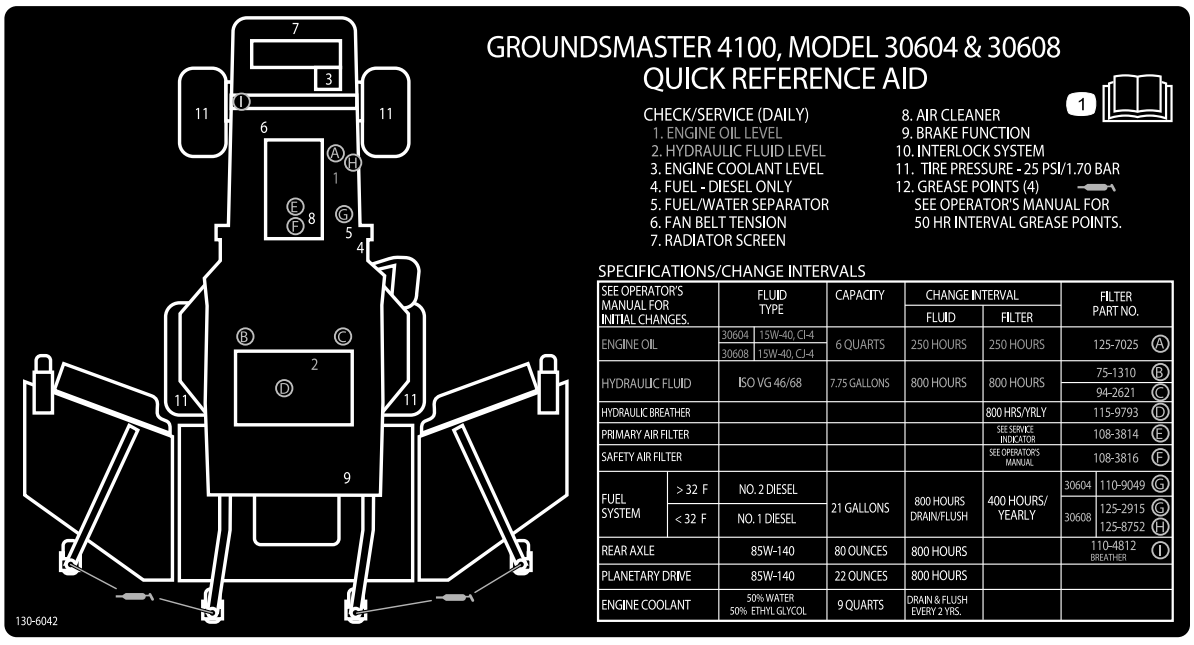

decal130-6042

130-6042

1. Read the *Operator's Manual* for maintenance information.

Setup

Loose Parts

Use the chart below to verify that all parts have been shipped.

Procedure	Description	Qty.	Use
1	No parts required	–	Grease the machine.
2	Warning decal	1	Replace the warning decal.
3	No parts required	–	Check the tire pressure.
4	No parts required	–	Check the fluid levels.

Media and Additional Parts

Description	Qty.	Use
Operator's Manual	1	Review before operating machine
Engine owner's Manual	1	Use to reference engine information
Parts Catalog	1	Use to reference part numbers
Operator training materials	1	Review before operating machine
Declaration of Conformity	1	

Note: Determine the left and right sides of the machine from the normal operating position.

1

Greasing the Machine

No Parts Required

Procedure

Before operating the machine, grease it to ensure proper lubricating characteristics; refer to Lubrication (page 51).

Important: **Failure to properly grease the machine will result in premature failure of critical parts.**

2

Replacing the Warning Decal

For CE Models Only

Parts needed for this procedure:

1	*Warning decal*

Procedure

On machines requiring European CE compliance, replace the warning decal Part No. 117-2754 with the warning decal Part No. 117-2766.

3

Checking the Tire Pressure

No Parts Required

Procedure

Check the tire pressure; refer to Checking the Tire Pressure (page 24).

Important: **Maintain pressure in all tires to ensure a good quality-of-cut and proper machine performance. Do not underinflate the tires.**

4

Checking the Fluid Levels

No Parts Required

Procedure

1. Check the engine-oil level; refer to Checking the Engine-Oil Level (page 54).
2. Check the hydraulic fluid level; refer to Checking the Hydraulic Fluid (page 66).
3. Check the cooling system; refer to Checking the Cooling System (page 62).
4. Check the planetary-gear-drive oil; refer to Checking the Planetary-Gear-Drive Oil (page 59).
5. Check the rear-axle lubricant; refer to Checking the Rear-Axle-Gearbox Lubricant (page 60).
6. Check the rear-axle-gearbox lubricant; refer to Checking the Rear-Axle-Gearbox Lubricant (page 60).

Product Overview

Controls

Note: Determine the left and right sides of the machine from the normal operating position.

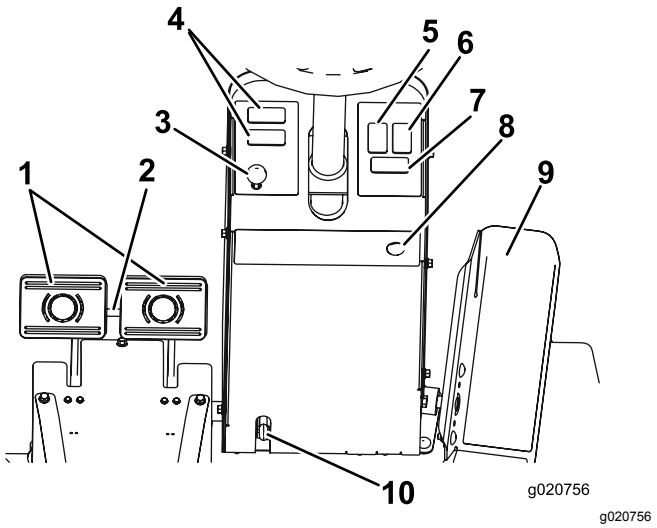

Figure 3

1.	Brake pedals	6.	Hazard-light switch (optional)
2.	Pedal-locking latch	7.	Turn-signal switch (optional)
3.	Parking-brake latch	8.	Horn button (optional)
4.	Space for optional accessory	9.	Traction pedal
5.	Beacon switch (optional)	10.	Tilt-steering lever

Traction Pedal

To stop, reduce your foot pressure on the traction pedal and allow it to return to the center position (Figure 3).

Brake Pedals

There are 2 foot pedals that operate individual wheel brakes for turning assistance, parking, and to aid in better side-hill traction. A latch connects the pedals for parking-brake operation and transport (Figure 3).

Pedal-Locking Latch

The pedal-locking latch connects the pedals together to engage the parking brake (Figure 3).

Tilt-Steering Lever

Press the tilt-steering lever down to tilt the steering wheel to the desired position, then release the lever to lock the adjustment (Figure 3).

Parking-Brake Latch

A knob on the left side of the console actuates the parking-brake lock (Figure 3).

To engage the parking brake, connect the pedals with the locking latch, push down on both pedals, and pull the parking-brake latch out. To release the parking brake, press both pedals until the parking-brake latch retracts.

Hazard-Light Switch (Optional)

Press the hazard-light switch to activate the hazard lights (Figure 3).

Turn-Signal Switch (Optional)

Press the left side of the turn-signal switch to activate the left-turn signal and the right side of the switch to activate the right-turn signal (Figure 3).

Key Switch

The key switch (Figure 4) has 3 positions: OFF, ON/PREHEAT, and START.

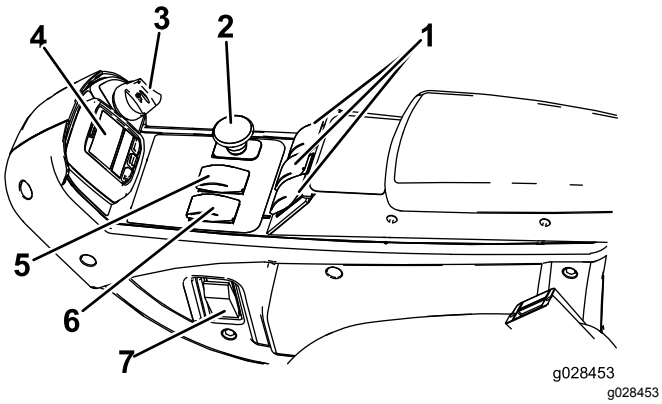

Figure 4

1. Lift switches
2. PTO switch
3. Key switch
4. InfoCenter
5. High-Low speed control
6. Engine-speed switch
7. Light switch (optional)

Engine-Speed Switch

The engine-speed switch has 2 modes to change the engine speed (Figure 4).

By momentarily tapping the switch, you can increase or decrease the engine speed in 100-rpm increments. When you hold the switch down, the engine automatically moves to HIGH or LOW IDLE, depending on which switch you press.

PTO Switch

The PTO switch has 2 positions: OUT (START) and IN (STOP). Pull the PTO button out to engage the mower-deck blades. Push the button in to disengage the mower-deck blades (Figure 4).

High-Low Speed-Control Switch

The High-Low speed-control switch allows the speed range to increase for transport of the machine (Figure 4).

Mower decks do not operate in high range. To switch between the HIGH and LOW range, raise the decks, disengage the PTO, disengage the cruise control, move the traction pedal in the NEUTRAL position, and move the machine at a slow speed.

Lift Switches

The lift switches raise and lower the mower decks (Figure 4). Press the switches forward to lower the mower decks and rearward to raise the mower decks. When starting the machine, with the mower decks in the down position, press the lift switch down to allow the mower decks to float and mow.

Note: The decks do not lower while in the High-speed range and they do not raise or lower if the operator is out of the seat when the engine is running. Also, the decks lower with the key in the ON position and the operator in the seat.

Cruise-Control Switch

The cruise-control switch locks in the pedal position to maintain the desired ground speed (Figure 5). Pressing the rear of the switch turns off the cruise control, the middle position of the switch enables the cruise-control function, and the front of the switch sets the desired ground speed.

Note: Pressing either brake pedal or moving the traction pedal into the REVERSE position, for 1 second, also disengages the pedal position.

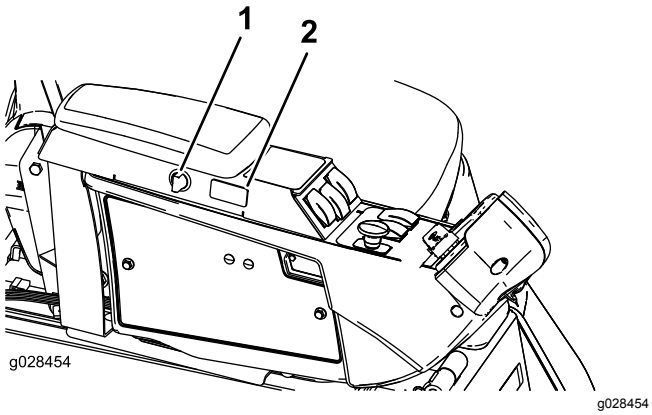

Figure 5

1. Power-point port
2. Cruise-control switch

Power-Point Port

The power-point port is used to power optional electrical accessories (Figure 5).

Adjusting the Seat

Seat-Adjustment Lever

Move the seat-adjustment lever on the side of the seat outward, slide the seat to the desired position, and release the lever to lock the seat into position (Figure 6).

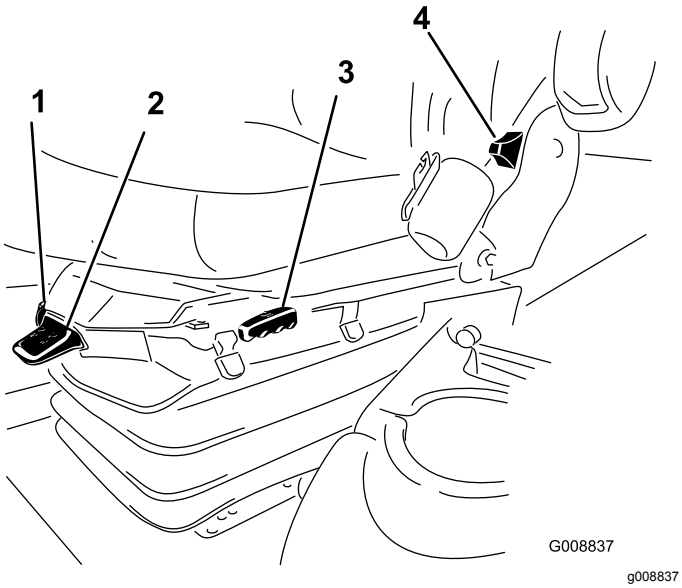

Figure 6

1. Weight gauge
2. Weight-adjustment lever
3. Seat-adjustment lever
4. Seat-back adjustment lever
5. Armrest-adjustment knob (not shown; located under arm rest)

Armrest-Adjustment Knob

Rotate the knob to adjust the armrest angle (Figure 6).

Seat-Back-Adjustment Lever

Move the lever to adjust the seat-back angle (Figure 6).

Weight Gauge

The weight gauge indicates when the seat is adjusted to the weight of the operator (Figure 6). Adjust the height by positioning the suspension within the range of the green region.

Weight-Adjustment Lever

Use this lever to adjust to the proper weight of the operator (Figure 6). Pull up the lever to increase the air pressure and push down to decrease the air pressure. The proper adjustment is correct when the weight gauge is in the green region.

Using the InfoCenter Control

The InfoCenter LCD display shows information about your machine such as the operating status, various diagnostics and other information about the machine (Figure 7). There is a splash screen and main information screen of the InfoCenter. You can switch between the splash screen and main information screen at any time by pressing any of the InfoCenter buttons and then selecting the appropriate directional arrow.

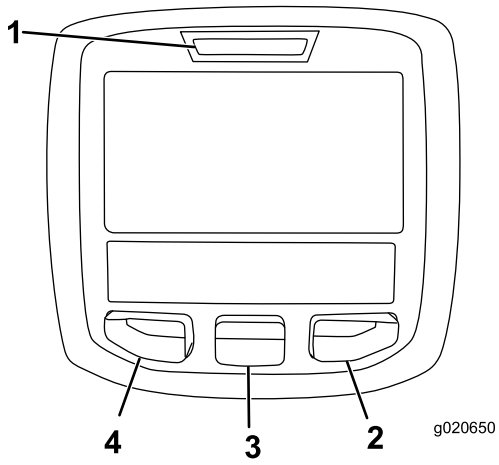

g020650

Figure 7

1. Indicator light
2. Right button
3. Middle button
4. Left button

- Left Button, Menu Access/Back Button—press this button to access the InfoCenter menus. You can use it to exit any menu that you are currently using.
- Middle Button—use this button to scroll down menus.
- Right Button—use this button to open a menu where a right arrow indicates additional content.
- Beeper—activated when lowering the decks or for advisories and faults.

Note: The purpose of each button may change depending on what is required at the time. Each button is labeled with an icon displaying its current function.

InfoCenter Icon Description

SERVICE DUE	Indicates when scheduled service should be performed
n min	Engine rpm/status—indicates the engine rpm
	Hour meter
	Info icon
	Sets the maximum traction speed
	Fast
	Slow
	Fan Reversal—indicates when the fan is reversed
	Fuel level
	Stationary regeneration required
	Air intake heater is active
	Raise the left deck
	Raise the center deck
	Raise the right deck
	Operator must sit in seat
	Parking Brake Indicator—indicates when the parking brake is on
H	Identifies the range as High
N	Neutral
L	Identifies the range as Low
	Coolant Temperature-indicates the engine coolant temperature in either °C or °F
	Temperature (hot)
	Traction or Traction Pedal

InfoCenter Icon Description (cont'd.)

	Denied or not allowed
	Engine Start
	PTO—indicates that the PTO is on
	Stop or shutdown
	Engine
	Key switch
	Indicates when the mower decks are being lowered
	Indicates when the mower decks are being raised
	PIN code
	Hydraulic-Oil Temperature—indicates the hydraulic-oil temperature
	CAN bus
	InfoCenter
	Bad or failed
	Center
	Right
	Left
	Bulb
	Output of TEC controller or control wire in harness
	High: over-allowed range
	Low: under-allowed range
	Out of range
	Switch
	Operator must release the switch

InfoCenter Icon Description (cont'd.)

	Operator should change to the indicated state
Symbols are often combined to form sentences. Some examples are shown below	
	Operator should put the machine in neutral
	Engine start denied
	Engine shutdown
	Engine coolant is too hot
	Hydraulic fluid is too hot
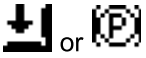 or	Sit down or set the parking brake

Using the Menus

To access the InfoCenter menu system, press the menu access button while at the main screen. This brings you to the main menu. Refer to the following tables for a synopsis of the options available from the menus:

Main Menu	
Menu Item	**Description**
Faults	The Faults menu contains a list of the recent machine faults. Refer to the Service Manual or your Authorized Toro Distributor for more information on the Faults menu and the information contained there.
Service	The Service menu contains information on the machine such as hours of use and other similar numbers.
Diagnostics	The Diagnostics menu displays the state of each machine switch, sensor and control output. You can use this to troubleshoot certain issues as it will quickly tell you which machine controls are on and which are off.

Main Menu	
Settings	The Settings menu allows you to customize and modify configuration variables on the InfoCenter display.
About	The About menu lists the model number, serial number, and software version of your machine.

Service	
Menu Item	**Description**
Hours	Lists the total number of hours that the machine, engine and fan have been on, as well as the number of hours that the machine has been transported and overheated
Counts	Lists the number of preheats and starts that the machine has experienced

Diagnostics	
Menu Item	**Description**
Engine Run	Refer to the Service Manual or your Authorized Toro Distributor for more information on the Engine Run menu and the information contained there.
Glowplugs	Indicates if the following items are active: Key start, timeout limited, and glowplugs
Fan	Indicates if the fan is active in the following instances: Engine high temp, oil high temp, engine or hydraulic high temp, and fan on

Settings	
Menu Item	**Description**
Units	Controls the units used on the InfoCenter; the menu choices are English or Metric
Language	Controls the language used on the InfoCenter*
LCD Backlight	Controls the brightness of the LCD display
LCD Contrast	Controls the contrast of the LCD display
Protected Menus	Allows a person authorized by your company with the PIN code to access protected menus.
Auto Idle	Controls the amount of time allowed before idling the engine when the machine is not in use
Mow Speed	Controls the maximum speed while in mow (low range)
Trans Speed	Controls the maximum speed while in transport (high range)
Smart Power	Smart Power prevents bogging down in heavy turf by automatically controlling the machine speed and optimizing cutting performance.

*Only "operator-faced" text is translated. Faults, Service, and Diagnostics screens are "service-faced." Titles are in the selected language, but menu items are in English.

About	
Menu Item	**Description**
Model	Lists the model number of the machine
SN	Lists the serial number of the machine
Machine Controller Revision	Lists the software revision of the master controller
InfoCenter Revision	Lists the software revision of the InfoCenter
CAN Bus	Lists the machine communication bus status

Protected Menus

There are 4 operating configuration settings that are adjustable within the Settings Menu of the InfoCenter: auto idle time delay, maximum mowing ground speed, maximum transport ground speed, and Smart Power. These settings are in the Protected Menu.

Accessing Protected Menus

Note: The factory default PIN code for you machine is either 0000 or 1234.

If you changed the PIN code and forgot the code, contact your Authorized Toro Distributor for assistance.

1. From the MAIN MENU, use the center button to scroll down to the SETTINGS MENU and press the right button (Figure 8).

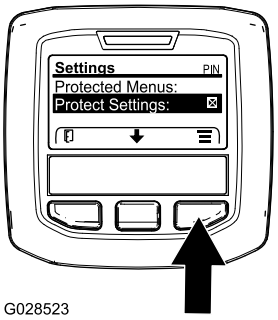

g028523

Figure 8

2. In the SETTINGS MENU, use the center button to scroll down to the PROTECTED MENU and press the right button (Figure 9A).

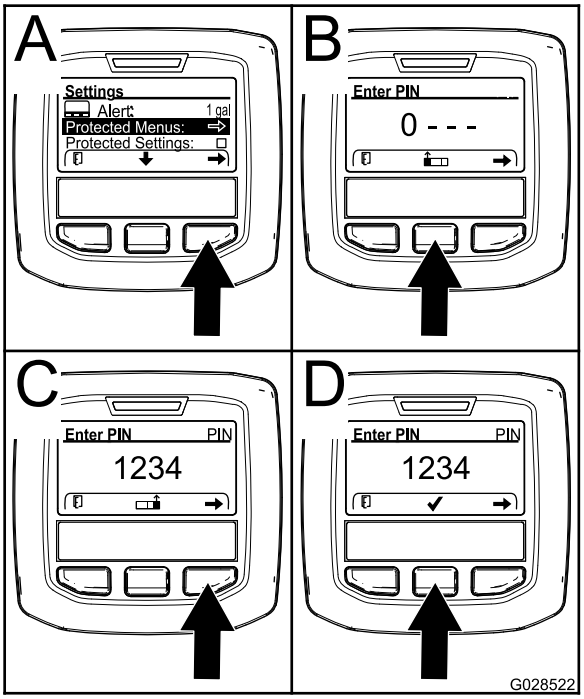

g028522

Figure 9

3. To enter the PIN code, press the center button until the correct first digit appears, then press the right button to move on to the next digit (Figure 9B and Figure 9C). Repeat this step until the last digit is entered and press the right button once more.
4. Press the middle button to enter the PIN code (Figure 9D).

   Wait until the red indicator light of the InfoCenter illuminates.

   Note: If the InfoCenter accepts the PIN code and the protected menu is unlocked, the word “PIN” displays in the upper right corner of the screen.

Note: Rotate the key switch to the OFF position and then to the ON position locks the protected menu.

You have the ability to view and change the settings in the Protected Menu. Once you access the Protected Menu, scroll down to Protect Settings option. Use the right button to change the setting. Setting the Protect Settings to OFF allows you to view and change the settings in the Protected Menu without entering the PIN code. Setting the Protect Settings to ON hides the protected options and requires you to enter the PIN code to change the setting in the Protected Menu. After you set the PIN code, rotate the key switch OFF and back to the ON position to enable and save this feature.

Setting the Auto Idle

1. In the Settings Menu, scroll down to Auto Idle.
2. Press the right button to change the auto idle time between Off, 8S, 10S, 15S, 20S, and 30S.

Setting the Maximum Allowed Mow Speed

1. In the Settings Menu, scroll down to Mow Speed and press the right button.
2. Use the right button to increase the max full mow speed (50%, 75%, or 100%).
3. Use the center button to decrease the max full mow speed (50%, 75%, or 100%).
4. Press the left button to exit.

Setting the Maximum Allowed Transport Speed

1. In the Settings Menu, scroll down to Transport Speed and press the right button.
2. Use the right button to increase the max transport speed (50%, 75%, or 100%).
3. Use the center button to decrease the max transport speed (50%, 75%, or 100%).
4. Press the left button to exit.

When finished with the Protected Menu, press the left button to exit to the Main Menu, then press the left button to exit to the Run Menu.

Specifications

Note: Specifications and design are subject to change without notice.

Width of cut	
Overall	315 cm (124 inches)
Center mower deck	137 cm (54 inches)
Wing mower deck	94 cm (37 inches)
Front and one wing mower deck	226 cm (89 inches)
Overall width	
Mower decks down	323 cm (127 inches)
Mower decks up (transports)	180 cm (71 inches)
Overall length	366 cm (144 inches)
Height	140 cm (55 inches)
Height with ROPS	217 cm (85.3 inches)
Ground clearance	15 cm (6 inches)
Wheel tread (to center of tire)	
Front	114 cm (45 inches)
Rear	107 cm (42 inches)
Wheel base	141 cm (55-1/2 inches)
Net Weight	1,922 kg (4,237 lbs)

Attachments/Accessories

A selection of Toro approved attachments and accessories is available for use with the machine to enhance and expand its capabilities. Contact your Authorized Service Dealer or Distributor or go to www.Toro.com for a list of all approved attachments and accessories.

Operation

Note: Determine the left and right sides of the machine from the normal operating position.

Before Operation

Before Operation Safety

General Safety

- Never allow children or untrained people to operate or service the machine. Local regulations may restrict the age of the operator. The owner is responsible for training all operators and mechanics.
- Become familiar with the safe operation of the equipment, operator controls, and safety signs. Know how to stop the machine and engine quickly.
- Check that all safety devices are attached and functioning properly. This includes, but is not limited to, operator-presence controls; safety switches and shields; the rollover protection system (ROPS); attachments; and brakes. Do not operate the machine unless all safety devices are in position and functioning as intended by the manufacturer.
- Always inspect the machine to ensure that the blades, blade bolts, and cutting assembly are not worn or damaged. Replace worn or damaged blades and bolts in sets to preserve balance.
- Inspect the area where you will use the machine and remove all objects that the machine could potentially throw.
- Evaluate the terrain to determine the appropriate equipment and any attachments or accessories required to operate the machine properly and safely.

Fuel Safety

⚠ DANGER

In certain conditions, fuel is extremely flammable and highly explosive. A fire or explosion from fuel can burn you and others and can damage property.

- **Fill the fuel tank outdoors, in an open area, when the engine is cold. Wipe up any fuel that spills.**
- **Never fill the fuel tank inside an enclosed trailer.**
- **Never smoke when handling fuel, and stay away from an open flame or where fuel fumes may be ignited by a spark.**
- **Store fuel in an approved container and keep it out of the reach of children. Never buy more than a 180-day supply of fuel.**
- **Do not operate the machine without the entire exhaust system in place and in proper working condition.**

⚠ WARNING

Fuel is harmful or fatal if swallowed. Long-term exposure to vapors can cause serious injury and illness.

- **Avoid prolonged breathing of vapors.**
- **Keep your hands and face away from the nozzle and the fuel-tank opening.**
- **Keep fuel away from your eyes and skin.**
- Use only an approved fuel container.
- Never remove the fuel cap or add fuel to the fuel tank while the engine is running.
- Never fill containers inside a vehicle or on a truck or trailer bed with a plastic liner. Always place containers on the ground and away from your vehicle before filling.
- Remove the equipment from the truck or trailer and add fuel to it while it is on the ground. If this is not possible, then add fuel using a portable container rather than from a fuel-dispenser nozzle.
- Keep the fuel-dispenser nozzle in contact with the rim of the fuel tank or container opening at all times until fueling is complete. Do not use a nozzle lock-open device.
- If you spill fuel on your clothing, change your clothing immediately.
- Fill the fuel tank until the fuel level is 25 mm (1 inch) below the bottom of the filler neck. Do not

overfill the fuel tank. Replace the fuel-tank cap and tighten it securely.

Checking the Engine-Oil Level

Before you start the engine and use the machine, check the oil level in the engine crankcase; refer to Checking the Engine-Oil Level (page 54).

Checking the Cooling System

Before you start the engine and use the machine, check the cooling system; refer to Checking the Cooling System (page 62).

Checking the Hydraulic System

Before you start the engine and use the machine, check the hydraulic system; refer to Checking the Hydraulic Fluid (page 66).

Filling the Fuel Tank

Fuel Tank Capacity

Fuel tank capacity: 79 L (21 US gallons)

Fuel Specification

Important: **Use only ultra-low sulphur diesel fuel. Fuel with higher rates of sulfur degrades the diesel oxidation catalyst (DOC), which causes operational problems and shortens the service life of engine components.**

Failure to observe the following cautions may damage the engine.

- Never use kerosene or gasoline instead of diesel fuel.
- Never mix kerosene or used engine oil with the diesel fuel.
- Never keep fuel in containers with zinc plating on the inside.
- Do not use fuel additives.

Petroleum Diesel

Cetane rating: 45 or higher

Sulfur content: Ultra-low sulfur (<15 ppm)

Fuel Table

Diesel fuel specification	Location
ASTM D975 No. 1-D S15 No. 2-D S15	USA
EN 590	European Union
ISO 8217 DMX	International
JIS K2204 Grade No. 2	Japan
KSM-2610	Korea

- Use only clean, fresh diesel fuel or biodiesel fuels.
- Purchase fuel in quantities that can be used within 180 days to ensure fuel freshness.

Use summer-grade diesel fuel (No. 2-D) at temperatures above -7°C (20°F) and winter-grade fuel (No. 1-D or No. 1-D/2-D blend) below that temperature.

Note: Use of winter-grade fuel at lower temperatures provides lower flash point and cold flow characteristics which eases starting and reduces fuel filter plugging.

Using summer-grade fuel above -7°C (20°F) contributes toward longer fuel pump life and increased power compared to winter-grade fuel.

Biodiesel

This machine can also use a biodiesel blended fuel of up to B20 (20% biodiesel, 80% petroleum diesel).

Sulfur content: Ultra-low sulfur (<15 ppm)

Biodiesel fuel specification: ASTM D6751 or EN14214

Blended fuel specification: ASTM D975, EN590, or JIS K2204

Important: **The petroleum diesel portion must be ultra-low sulfur.**

Observe the following precautions:

- Biodiesel blends may damage painted surfaces.
- Use B5 (biodiesel content of 5%) or lesser blends in cold weather.
- Monitor seals, hoses, gaskets in contact with fuel as they may be degraded over time.
- Fuel filter plugging may be expected for a time after converting to biodiesel blends.
- Contact your Authorized Toro Distributor if you wish for more information on biodiesel.

Adding Fuel

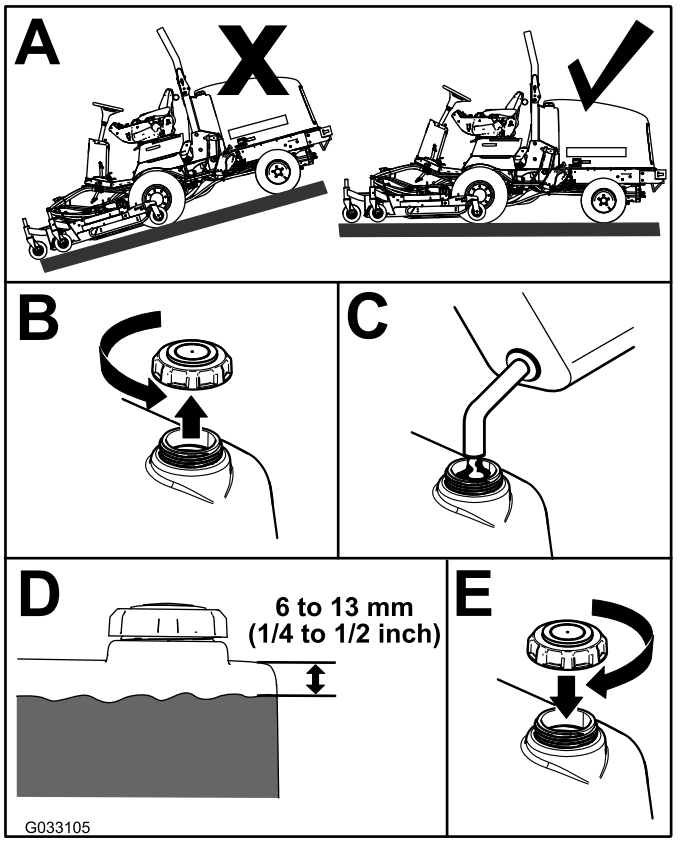

Figure 10

Note: If possible, fill the fuel tank after each use; this minimizes possible buildup of condensation inside the fuel tank.

Checking the Tire Pressure

Service Interval: Before each use or daily

⚠ DANGER

Low tire pressure decreases machine side-hill stability. This could cause a rollover, which may result in personal injury or death.

Do not underinflate the tires.

The correct air pressure in the tires is 172 to 207 kPa (25 to 30 psi).

Important: **Maintain the recommended pressure in all tires to ensure a good quality of cut and proper machine performance. Do not under-inflate the tires.**

Check the air pressure in all the tires before operating the machine.

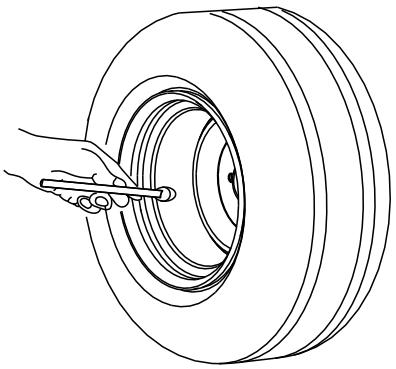

Figure 11

Checking the Torque of the Wheel-Lug Nuts

Service Interval: After the first hour

After the first 10 hours

Every 200 hours

Torque the wheel-lug nuts to 115 to 136 N·m (85 to 100 ft-lb) in the order shown in Figure 12 and Figure 13.

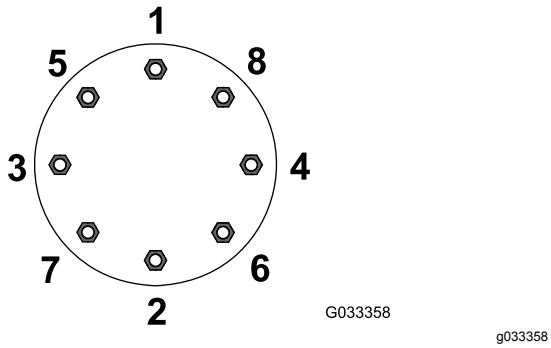

Figure 12
Front Wheels

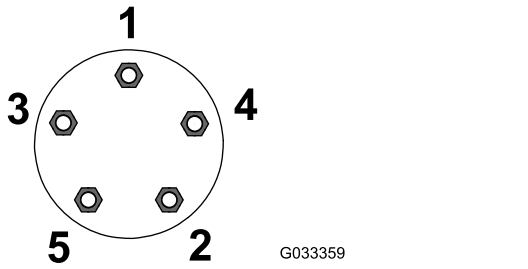

Figure 13
Rear Wheels

⚠ WARNING

Failing to maintain proper torque of the wheel-lug nuts could result in personal injury.

Torque the wheel-lug nuts to the proper torque value.

Adjusting the Rollover Protection System (ROPS)

⚠ WARNING

To avoid injury or death from rollover: keep the roll bar in the raised locked position and use the seat belt.

Ensure that the seat is secured with the seat latch.

⚠ WARNING

There is no rollover protection when the roll bar is in the down position.

- **Do not operate the machine on uneven ground or on a hillside with the rollover protection in the down position.**
- **Lower the roll bar only when absolutely necessary.**
- **Do not wear the seat belt when the roll bar is in the down position.**
- **Drive slowly and carefully.**
- **Raise the roll bar as soon as clearance permits.**
- **Check carefully for overhead clearances (i.e., branches, doorways, electrical wires) before driving under any objects and do not contact them.**

Important: **Always use the seat belt when the roll bar is in the raised and locked position. Do not use the seat belt when the roll bar is in the lowered position.**

Lowering the ROPS

Important: **Lower the roll bar only when absolutely necessary.**

Important: **Ensure that the seat is secured with the seat latch.**

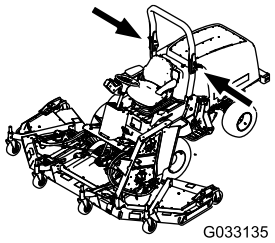

g033135

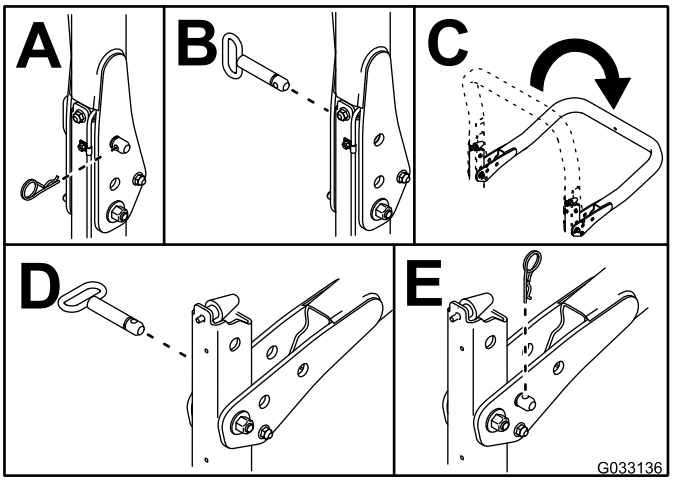

g033136

Figure 14

Raising the ROPS

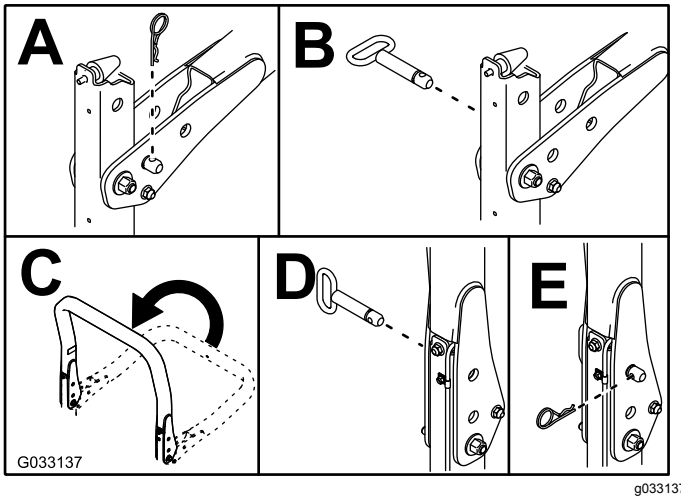

g033137

Figure 15

Adjusting the Height of Cut

Center Mower Deck

The height of cut is adjustable from 25 to 127 mm (1 to 5 inches) in 13 mm (1/2 inch) increments. To adjust the height of cut on the center mower deck, position the castor wheel axles in the upper or lower holes of the castor forks, add or remove an equal number of spacers from the castor forks, and secure the rear chain to the desired hole.

1. Start the engine and raise the mower decks to change height of cut.
2. Shut off the engine and remove the key after the mower deck is raised.
3. Position the caster-wheel axles in the same holes in all caster forks.

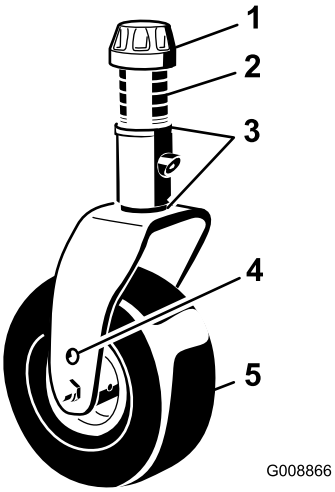

g008866

Figure 16

1. Tensioning cap
2. Spacers
3. Shims
4. Top axle-mounting hole
5. Caster wheel

Note: When operating in 64 mm (2-1/2 inch) height of cut or higher, install the axle bolt in the lower caster-fork hole to prevent grass buildup between the wheel and the fork. When operating at heights of cuts lower than 64 mm (2-1/2 inches) and grass buildup is detected, reverse the machines direction to pull any clippings away from the wheel/fork area.

4. Remove the tensioning cap from the spindle shaft and slide the spindle out of the caster arm (Figure 16).
5. Install 2 shims onto the spindle shaft as they were originally installed.

Note: These shims require a level across the entire width of the mower decks. Slide the appropriate number of 13 mm (1/2 inch) spacers (refer to the chart below) onto the spindle shaft

to attain the desired height of cut; then slide the washer onto the shaft.

Refer to the following chart to determine the combinations of spacers for the setting (Figure 17):

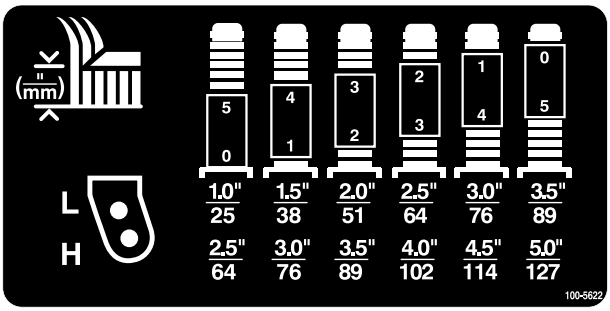

decal100-5622nc

Figure 17

6. Push the caster spindle through the front caster arm.
7. Install the shims (as they were originally installed) and the remaining spacers onto the spindle shaft.
8. Install the tensioning cap to secure the assembly.
9. Remove the hairpin cotter and clevis pin securing the height-of-cut chains to the rear of the mower deck (Figure 18).

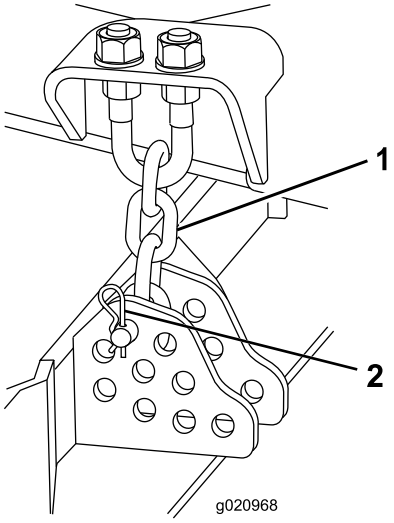

g020968

Figure 18

1. Height-of-cut chain
2. Clevis pin and hairpin cotter

10. Mount the height-of-cut chains to the desired height-of-cut hole with the clevis pin and hairpin cotter (Figure 19).

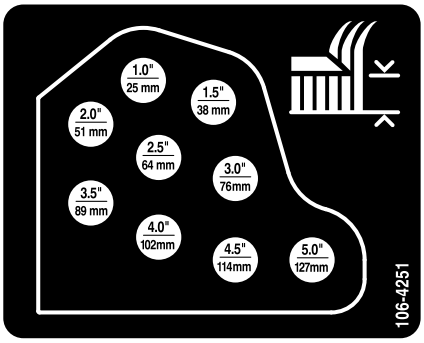

decal106-4251nc

Figure 19

Note: When using 25 mm (1 inch), 38 mm (1-1/2 inch), or occasionally 51 mm (2 inch) height of cut, move the skids and gage wheels to the highest position.

Wing Mower Decks

To adjust the height of cut on the wing mower decks, add or remove an equal number of spacers from the caster forks, position the caster-wheel axles in the high or low height-of-cut holes in the caster forks, and secure the pivot arms to the selected height-of-cut bracket holes.

1. Position the caster-wheel axles in the same holes in all of the caster forks (Figure 20 and Figure 22).
2. Remove the tensioning cap from the spindle shaft and slide the spindle out of the caster arm (Figure 20).

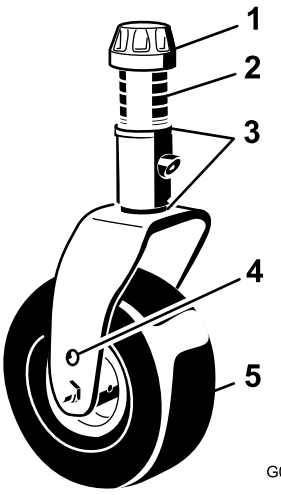

g008866

Figure 20

1. Tensioning cap
2. Spacers
3. Shims
4. Top axle-mounting hole
5. Caster wheel

3. Install 2 shims onto the spindle shaft as they were originally installed.

Note: These shims are required to achieve a level across the entire width of the mower decks. Slide the appropriate number of 13 mm (1/2 inch) spacers (refer to the chart below) onto the spindle shaft to attain the desired height of cut; then slide the washer onto the shaft.

Refer to the following chart to determine the combinations of spacers for the setting (Figure 21).

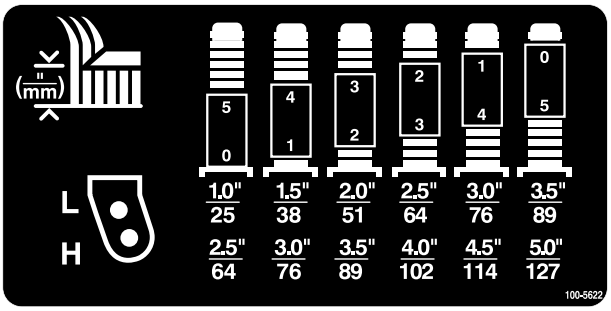

decal100-5622nc

Figure 21

4. Push the caster spindle through the front caster arm.
5. Install the shims (as they were originally installed) and the remaining spacers onto the spindle shaft.
6. Remove the hairpin cotter and clevis pins from the caster-pivot arms (Figure 22).
7. Rotate the tension rod to raise or lower the pivot arm until the holes are aligned with the selected height-of-cut bracket holes in the mower-deck frame (Figure 22 and Figure 23).

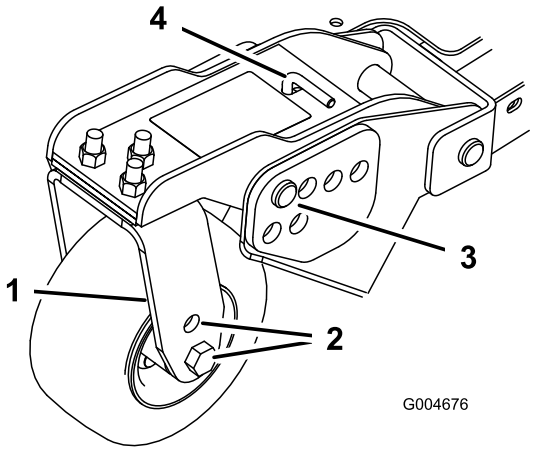

g004676

Figure 22

1. Caster-pivot arm
2. Axle-mounting holes
3. Clevis pin and hairpin cotter
4. Tension rod

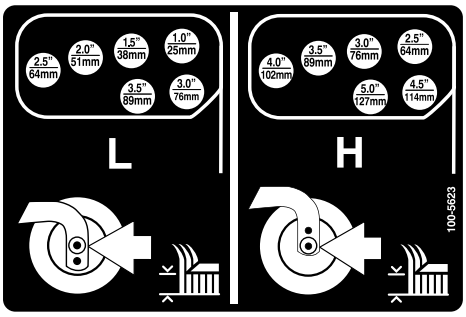

decal100-5623nc

Figure 23

8. Insert the clevis pins and install the hairpin cotters.
9. Rotate the tension rod counterclockwise (finger tight) to put tension on adjustment.

Adjusting the Skids

Mount the skids in the lower position when operating at heights of cut greater than 64 mm (2-1/2 inches) and in the higher position when operating at heights of cut lower than 64 mm (2-1/2 inches).

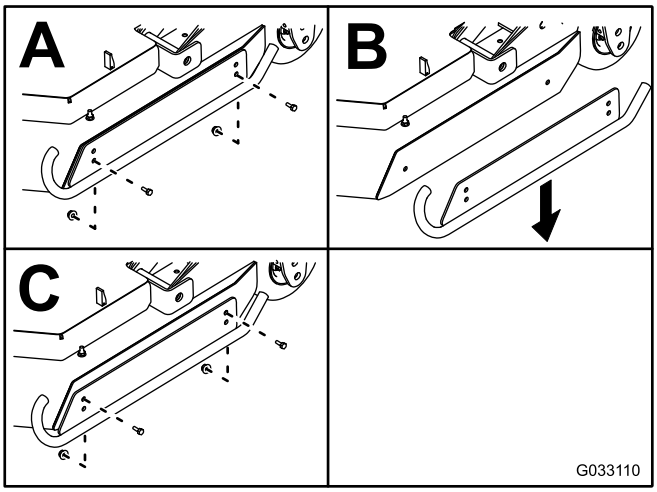

g033110

Figure 24

Adjusting the Mower-Deck Rollers

The mower-deck rollers should be mounted in the lower position when operating at height of cuts greater than 64 mm (2-1/2 inches) and in the higher position when operating in height of cuts lower than 64 mm (2-1/2 inches).

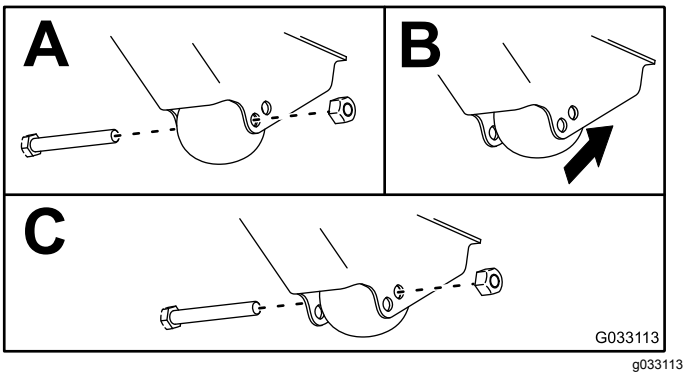

Figure 25

Adjusting the Blade

To ensure proper operation of the mower deck, there must be a 10 to 16 mm (0.38 to 0.62 inch) clearance between the tips of the side and center mower-deck blades (Figure 26).

1. Raise mower deck so the blades are visible and block the center deck section so it cannot fall accidentally.

   Note: The wing decks must be horizontal to the center mower deck.

2. Rotate a center and adjoining side blade so the blade tips are aligned. Measure the distance between the blade tips (Figure 26).

   Note: The distance should be approximately 10 to 16 mm (0.38 to 0.62 inch)

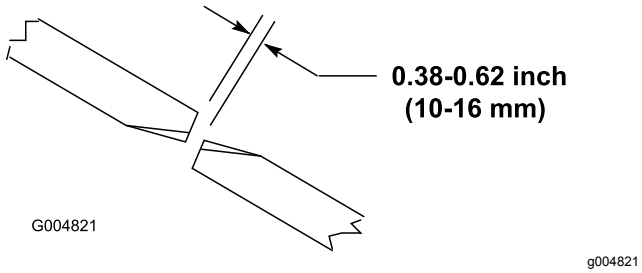

Figure 26

3. To adjust distance, locate adjuster bolt on rear pivot link of the mower deck (Figure 27).
4. Loosen the jam nut on the adjuster bolt.
5. Loosen or tighten the adjuster bolts until you attain a 10 to 16 mm (0.38 to 0.62 inch) clearance, then tighten the jam nut.
6. Repeat the procedure on the opposite side of the mower deck.

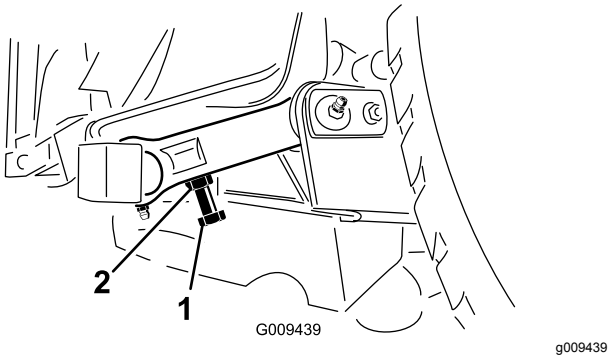

Figure 27

1. Adjuster bolt
2. Jam nut

Correcting a Mismatch Between Mower Decks

Due to differences in grass conditions and the counterbalance setting of the traction unit, a sample area of grass should be cut and the appearance checked before formal cutting is started.

1. Set all mower decks to the desired height of cut; refer to Adjusting the Height of Cut (page 26).
2. Check and adjust the front and rear tire pressures to 172 to 207 kPa (25 to 30 psi).
3. Check and adjust all of caster tire pressures to 345 kPa (50 psi).
4. Check the charge and counterbalance pressures with the engine at HIGH IDLE, using hydraulic-test ports.

   Note: Adjust the counterbalance to 2,241 kPa (325 psi).
5. Check for bent blades; refer to Checking for a Bent Blade (page 73).
6. Cut grass in a test area to determine if all mower decks are cutting at the same height.
7. If mower-deck adjustments are still needed, find a flat surface using a 2 m (6 foot) or a longer straight edge.
8. To ease measuring the blade plane, raise the height of cut to 7.6 to 10.1 cm (3 to 4 inches); refer to Adjusting the Height of Cut (page 26).

9. Lower the mower decks onto a flat surface and remove the covers from the top of the mower decks.
10. Loosen the flange nut, securing the idler pulley, to release the belt tension on each mower deck.

Setting up the Center Mower Deck

1. Rotate the blade on each spindle until the ends face forward and backward.
2. Measure from the floor to the front tip of the cutting edge.
3. Adjust the shims (3 mm or 1/8 inch) on the front caster fork(s) to match the height-of-cut decal (Figure 28); refer to Adjusting the Mower-Deck Pitch (page 70).

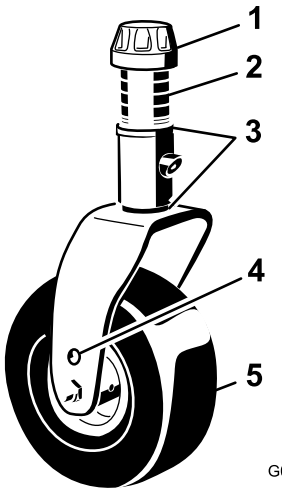

g008866

Figure 28

1. Tensioning cap
2. Spacers
3. Shims
4. Top axle-mounting hole
5. Caster wheel

Setting up the Wing Mower Decks

1. Rotate the blade of each spindle until the ends face forward and backward.
2. Measure from the floor to the front tip of the cutting edge.
3. Adjust the shims (3 mm or 1/8 inch) on front caster arm(s) to match the height-of-cut decal (Figure 29).

   Note: For the outside blade spindle only, refer to Adjusting the Mower-Deck Pitch (page 70).

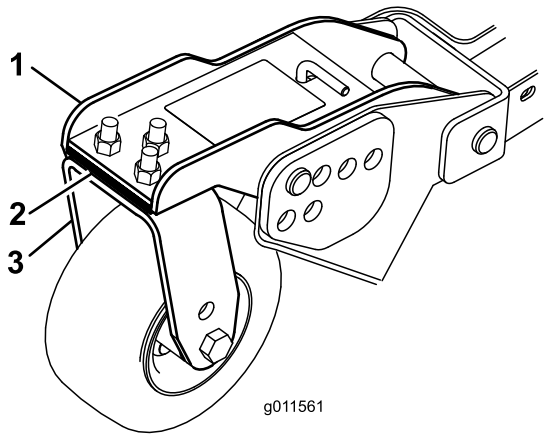

g011561

Figure 29

1. Front caster arm
2. Shims
3. Front caster fork

Matching the Height of Cut Between Mower Decks

1. Position blade side to side on outside spindle of both wing mower decks.
2. Measure from the floor to the tip of the cutting edge on both units and compare.

   Note: These numbers should be within 3 mm (1/8 inch) of each other.
3. Add or remove shims (1/8 inch) as needed on side castor wheels.
4. Check the measurement between the outside edges of both wing mower decks and adjust as necessary.

Checking the Safety-Interlock Switches

Service Interval: Before each use or daily

The machine has interlock switches in the electrical system. These switches disable either the traction or the PTO functions when you leave the seat. Although the engine will continue to run if the PTO switch is disengaged and the traction pedal is released, stop the engine before rising from the seat.

To check the operation of the interlock switches, perform the following procedure:

1. Drive the machine slowly to a large, relatively open area. Lower the mower deck, stop the engine, and apply the parking brake.
2. Sit on the seat and press the traction pedal. Try to start the engine. The engine should not start. If the engine starts, there is a malfunction in the interlock system that should be corrected before beginning operation.
3. Sit on the seat and start the engine. Rise from the seat and move the PTO switch to ON. The PTO should not engage. If the PTO engages, there is a malfunction in the interlock system that should be corrected before beginning operation.
4. Sit on the seat, engage the parking brake and start the engine. Move the traction pedal out of the NEUTRAL position. The InfoCenter will display “traction not allowed” and the machine should not move. If the engine does move, there is a malfunction in the interlock system that should be corrected before beginning operation.

During Operation

During Operation Safety

General Safety

- The owner/user can prevent and is responsible for accidents that may cause injuries to himself/herself and others and for damage to property.
- Wear appropriate clothing, including eye protection; slip-resistant, substantial footwear; and hearing protection. Wearing safety shoes and long pants is advisable and required by some local ordinances and insurance regulations. Tie back long hair, secure loose clothing, and do not wear jewelry.
- Ensure that all drives are in the NEUTRAL position, the parking brake is engaged, and you are in the operating position before you start the engine.
- Keep all body parts, including hands and feet, away from all moving parts.
- Do not operate the machine while ill, tired, or under the influence of alcohol or drugs.
- Keep the direction of the mower discharge away from people and pets.
- Do not mow in reverse unless it is absolutely necessary. If you must mow in reverse, look behind and down for small children before and while moving the machine in reverse. Stay alert and stop the machine if a child enters the area.
- Use extreme care when approaching blind corners, shrubs, trees, or other objects that may block your view.
- Do not mow near drop-offs, ditches, or embankments. The machine could suddenly roll over if a wheel goes over the edge or if the edge caves in.
- Never carry passengers on the machine.
- Operate the machine only in good visibility and appropriate weather conditions. Do not operate the machine when there is the risk of lighting.
- Do not mow on wet grass. Reduced traction could cause the machine to slide.
- Never raise the mower deck with the blades running.
- Stop the machine and inspect the blades after striking an object or if there is an abnormal vibration in the machine. Make all necessary repairs before resuming operation.
- Stop the blades whenever you are not mowing, especially while crossing loose terrain such as gravel.
- Slow down and use caution when making turns and crossing roads and sidewalks with the machine. Always yield the right-of-way.
- Turn on the flashing warning lights on the machine whenever you travel on a public road, except where such use is prohibited by law.
- Disengage the drive to the attachment and shut off the engine before adding fuel and adjusting the height of cut.
- Reduce the throttle setting before stopping the engine and, if the engine has a fuel-shutoff valve, shut off the fuel when you have finished operating the machine.
- Never run an engine in an area where exhaust gases are enclosed.
- Never leave a running engine unattended.
- Before leaving the operating position, do the following:

  - Stop the machine on level ground.
  - Disengage the power take-off and lower the attachments.
  - Set the parking brake.
  - Shut off the engine and remove the key.
  - Wait for all moving parts to stop.
- Do not change the governor settings on or overspeed the engine. Operating the engine at excessive speed may increase the potential for personal injury.
- Do not use the machine as a towing vehicle.
- Use accessories and attachments approved by The Toro® Company only.

Rollover Protection System (ROPS) Safety

- **Do not** remove the ROPS from the machine.
- Ensure that the seat belt is attached and that you can release it quickly in the event of an emergency.
- Always wear your seat belt when the ROPS is up.
- Check carefully for overhead clearances, such as branches, doorways, and electrical wires, before driving the machine under them. Do not contact them.
- Keep the ROPS in safe operating condition by thoroughly inspecting it periodically for damage and keeping all the mounting fasteners tight.
- Replace a damaged ROPS. Do not repair or revise it.
- Any alterations to a ROPS must be approved by The Toro® Company.

Slope Safety

- Slow down the machine and use extra care on hillsides. Travel in the recommended direction on hillsides. Turf conditions can affect the stability of the machine.
- Avoid starting, stopping, or turning the machine on a slope. If the tires lose traction, disengage the blade(s) and proceed slowly straight down the slope.
- Do not turn the machine sharply. Use care when reversing the machine.
- When operating the machine on a slope, always keep all cutting units lowered.
- Avoid turning the machine on slopes. If you must turn, turn slowly and gradually downhill, if possible.
- Use extra care while operating the machine with attachments; they can affect the stability of the machine.

Starting and Stopping the Engine

Starting the Engine

Important: **The fuel system automatically bleeds itself when any of the following situations occur:**

- Initial start up of a new machine.
- The engine has ceased running due to lack of fuel.
- Maintenance has been performed upon the fuel system components.

1. Remove your foot from the traction pedal and ensure that it is in neutral. Ensure that the parking brake is set.
2. Move the engine-speed switch to the LOW-IDLE position.
3. Turn the ignition key to the RUN position.

   Note: The glow indicator will light.
4. When the glow indicator dims, turn the ignition key to the START position. Release the key immediately when the engine starts and allow it to return to the RUN position.

   Important: **Do not run the starter motor more than 30 seconds at a time or premature starter failure may result. If the engine fails to start after 30 seconds, turn the key to the OFF position, check the controls and procedures, wait 30 additional seconds, and repeat the starting procedure.**
5. Allow engine to warm up at mid speed (without load), then move the throttle control to the desired position.

Important: **Allow engine to idle for 5 minutes before shutting it off after a full-load operation. Failure to do so may lead to turbo-charger trouble.**

Stopping the Engine

Important: **Allow the engine to idle for 5 minutes before shutting it off after a full-load operation. This allows the turbocharger to cool down before shutting the engine off. Failure to do so may lead to turbocharger trouble.**

Note: Lower the mower decks to the ground whenever you park the machine. This relieves the hydraulic load from the system, prevents wear on system parts, and also prevents accidental lowering of the mower decks.

1. Move the PTO switch to the OFF position.
2. Set the parking brake.

3. Move the engine-speed switch to the LOW IDLE position.
4. Rotate the ignition key to the OFF position.
5. Remove the key from the switch to prevent accidental starting.

Understanding Smart Power™ Traction

With Toro Smart Power™ traction, you do not have to manually balance the traction speed with the engine speed in heavy conditions. Smart Power prevents bogging down in heavy turf by automatically controlling the machine speed and optimizing cutting performance. You can simply set a max ground speed, that is comfortable, and mow without having to manually reduce the traction speed when mowing in heavy conditions.

Reversing Fan Operation

The fan speed is controlled by the hydraulic-oil temperature and engine-coolant temperature. A reverse cycle is automatically initiated when either the engine coolant or hydraulic-oil temperature reaches a certain point. This reversal helps blow debris off the rear screen and lower the engine and hydraulic-oil temperatures. By simultaneously pressing the right and left buttons on the InfoCenter, the fan will complete a manually-initiated reverse cycle. It is recommended to manually reverse the fan prior to leaving the work area, entering the shop, or storage area.

Understanding Auto Idle

The machine is equipped with auto idle, which automatically idles the engine when all of the following functions are not used, for a pre-determined time, previously set in the InfoCenter.

- The traction pedal is returned to the NEUTRAL position.
- The PTO is disengaged.
- None of the lift switches are activated.

  When any of the above functions are initiated, the machine will automatically return to the previous throttle position.

Cutting Grass with the Machine

Note: Cutting grass at a rate that loads the engine promotes DPF regeneration.

1. Move the machine to the job site.
2. Whenever possible, set the engine-speed switch to high idle.
3. Engage the PTO switch.
4. Gradually move the traction pedal forward and slowly drive the machine over the mowing area.
5. Once the front of the cutting units are over the mowing area, lower the cutting units.
6. Cut grass so that the blades can cut and discharge clippings at a high rate while producing a good quality of cut.

   Note: If the cutting rate is too high, the quality of cut may deteriorate. Reduce the ground speed of the machine or reduce the width of cut to regain high idle engine speed.
7. When the cutting units are over the far edge of the mowing area, lift the cutting units.
8. Perform a tear-shaped turn to quickly line up for your next pass.

Diesel Particulate Filter Regeneration

The diesel particulate filter (DPF) is part of the exhaust system. The diesel-oxidation catalyst of the DPF reduces harmful gasses and the soot filter removes soot from the engine exhaust.

The DPF regeneration process uses heat from the engine exhaust to incinerate the soot accumulated on the soot filter, converting the soot to ash, and clears the channels of the soot filter so that filtered engine exhaust flows out the DPF.

The engine computer monitors the accumulation of soot by measuring the back pressure in the DPF. If the back pressure is too high, soot is not incinerating in the soot filter through normal engine operation. To keep the DPF clear of soot, remember the following:

- Passive regeneration occurs continuously while the engine is running—run the engine at full engine speed when possible to promote DPF regeneration.
- If the back pressure is too high, the engine computer signals you through the InfoCenter when additional processes (assist and reset regeneration) are running.
- Allow the assist and reset regeneration process to complete before shutting off the engine.

Operate and maintain your machine with the function of the DPF in mind. Engine load at high idle engine speed generally produce adequate exhaust temperature for DPF regeneration.

Important: **Minimize the amount of time that you idle the engine or operate the engine at low-engine speed to help reduce the accumulation of soot in the soot filter.**

⚠ CAUTION

The exhaust temperature is hot (approximately 600°C (1112°F) during DPF parked regeneration or recovery regeneration. Hot exhaust gas can harm you or other people.

- **Never operate the engine in an enclosed area.**
- **Make sure that there are no flammable materials around the exhaust system.**
- **Never touch a hot exhaust system component.**
- **Never stand near or around the exhaust pipe of the machine.**

DPF Soot Accumulation

- Over time, the DPF accumulates soot in the soot filter. The computer for the engine monitors the soot level in the DPF.
- When enough soot accumulates, the computer informs you that it is time to regenerate the diesel particulate filter.
- DPF regeneration is a process that heats the DPF to convert the soot to ash.
- In addition to the warning messages, the computer reduces the power produced by the engine at different soot-accumulation levels.

Engine Warning Messages—Soot Accumulation

Indication Level	Fault Code	Engine Power Rating	Recommended Action
Level 1: Engine Warning	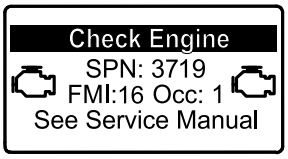 g213866 **Figure 30** Check Engine SPN 3719, FMI 16	The computer de-rates the engine power to 85%	Perform a parked regeneration as soon as possible; refer to Parked Regeneration (page 38).
Level 2: Engine Warning	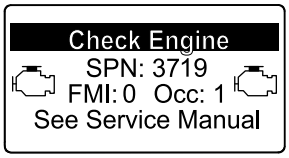 g213867 **Figure 31** Check Engine SPN 3719, FMI 0	The computer de-rates the engine power to 50%	Perform a recovery regeneration as soon as possible; refer to Recovery Regeneration (page 41).

DPF Ash Accumulation

- The lighter ash is discharged through the exhaust system; the heavier ash collects in the soot filter.
- Ash is a residue of the regeneration process. Over time, the diesel particulate filter accumulates ash that does not discharge with the engine exhaust.
- The computer for the engine calculates the amount of ash accumulated in the DPF.
- When enough ash accumulates, the engine computer sends information to the InfoCenter in the form of a system advisory or an engine fault to indicate the accumulation of ash in the DPF.
- The advisory and faults are indications that it is time to service the DPF.
- In addition to the warnings, the computer reduces the power produced by the engine at different ash-accumulation levels.

InfoCenter Advisory and Engine Warning Messages—Ash Accumulation

Indication Level	Advisory or Fault Code	Engine Speed Reduction	Engine Power Rating	Recommended Action
Level 1: System Advisory	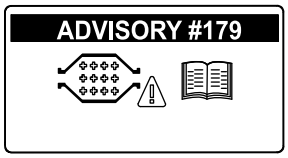 g213865 **Figure 32** Advisory #179	None	100%	Notify your service department that advisory #179 displays in the InfoCenter.
Level 2: Engine Warning	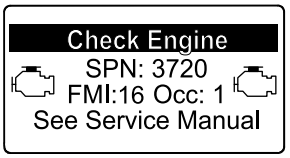 g213863 **Figure 33** Check Engine SPN 3720, FMI 16	None	The computer de-rates the engine power to 85%	Service the DPF; refer to Servicing the Diesel-Oxidation Catalyst (DOC) and the Soot Filter (page 56)
Level 3: Engine Warning	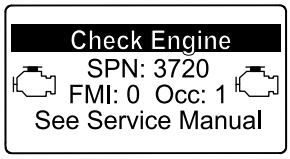 g213864 **Figure 34** Check Engine SPN 3720, FMI 0	None	The computer de-rates the engine power to 50%	Service the DPF; refer to Servicing the Diesel-Oxidation Catalyst (DOC) and the Soot Filter (page 56)
Level 4: Engine Warning	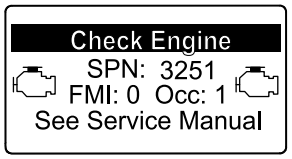 g214715 **Figure 35** Check Engine SPN 3251, FMI 0	Engine speed at max torque + 200 rpm	The computer de-rates the engine power to 50%	Service the DPF; refer to Servicing the Diesel-Oxidation Catalyst (DOC) and the Soot Filter (page 56)

Types of Diesel Particulate Filter Regeneration

Types of diesel particulate filter regeneration that are performed while the machine is operating:

Type of Regeneration	Conditions for DPF regeneration	DPF description of operation
Passive	Occurs during normal operation of the machine at high-engine speed or high-engine load	The InfoCenter does not display an icon indicating passive regeneration. During passive regeneration, the DPF processes high-heat exhaust gasses; oxidizing harmful emissions and burning soot to ash. Refer to Passive DPF Regeneration (page 37).
Assist	Occurs as a result of low-engine speed, low-engine load, or after the computer detects back pressure in the DPF	 When the assist/reset-regeneration icon is displayed in the InfoCenter, an assist regeneration is in progress. During assist regeneration, the computer controls the intake throttle to increase the exhaust temperature, enabling assist regeneration to occur. Refer to Assist DPF Regeneration (page 37).
Reset	Occurs after assist regeneration only if the computer detects that assist regeneration did not sufficiently reduce the soot level Also occurs every 100 hours to reset baseline sensor readings	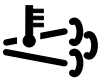 When the assist/reset-regeneration icon is displayed in the InfoCenter, a regeneration is in progress. During reset regeneration, the computer controls the intake throttle and fuel injectors to increase the exhaust temperature during regeneration. Refer to Reset Regeneration (page 38).

Types of diesel particulate filter regeneration that require you to park the machine:

Type of Regeneration	Conditions for DPF regeneration	DPF description of operation
Parked	Soot buildup occurs as a result of prolonged operation at low-engine speed or low-engine load. May also occur as a result of using incorrect fuel or oil The computer detects back pressure due to soot buildup and requests a parked regeneration	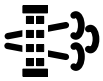 When the parked-regeneration icon is displayed in the InfoCenter, a regeneration is requested. • Perform the parked regeneration as soon as possible to avoid needing a recovery regeneration. • A parked regeneration requires 30 to 60 minutes to complete. • You must have at least a 1/4 tank of fuel in the tank. • You must park the machine to perform a recovery regeneration. Refer to Parked Regeneration (page 38).

Types of diesel particulate filter regeneration that require you to park the machine: (cont'd.)

Type of Regeneration	Conditions for DPF regeneration	DPF description of operation
Recovery	Occurs as a result of ignoring parked regeneration requests and continuing operation, adding more soot when the DPF is already in need of a parked regeneration	When the recovery-regeneration icon 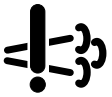 is displayed in the InfoCenter, a recovery regeneration is requested. Contact your Authorized Toro Distributor to have a service technician perform the recovery regeneration. • A recovery regeneration requires up to 4 hours to complete. • You must have at least a 1/2 tank of fuel in the machine. • You must park the machine to perform a recovery regeneration. Refer to Recovery Regeneration (page 41).

Passive DPF Regeneration

- Passive regeneration occurs as part of normal engine operation.
- While operating the machine, run the engine at full-engine speed when possible to promote DPF regeneration.

Assist DPF Regeneration

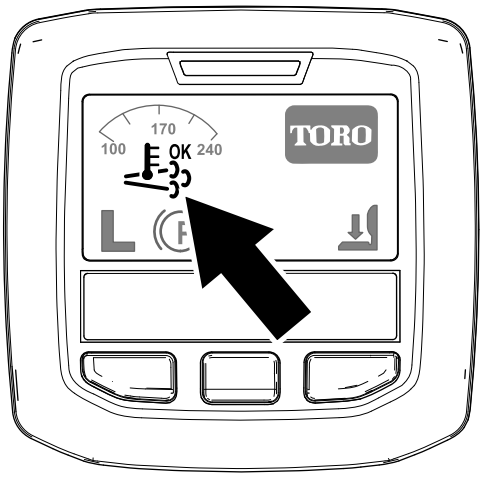

g214711

Figure 36
Assist/reset-regeneration icon

- The assist/reset-regeneration icon displays in the InfoCenter (Figure 36).
- The computer takes control of the intake throttle to increase the temperature of the engine exhaust.
- While operating the machine, run the engine at full engine speed when possible to promote DPF regeneration.
- The 

icon displays in the InfoCenter while the assist regeneration is processing.
- Whenever possible, do not shut off the engine or reduce engine speed while the assist regeneration is processing.

Important: **Allow the machine to complete the assist regeneration process before shutting off the engine.**

Note: The assist regeneration is finished processing when the 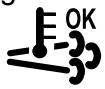

icon disappears from the InfoCenter.

Reset Regeneration

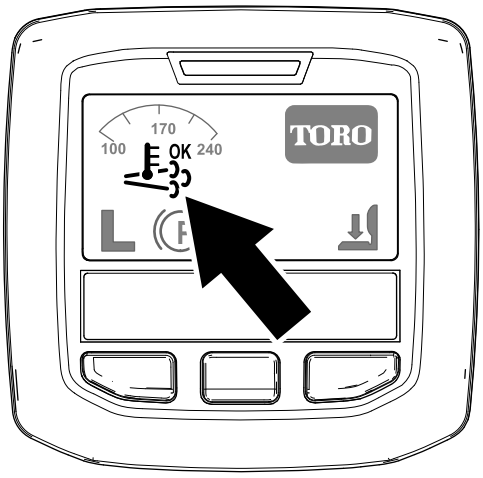

g214711

Figure 37
Assist/reset-regeneration icon

- The assist/reset-regeneration icon displays in the InfoCenter (Figure 37).
- The computer takes control of the intake throttle and changes the fuel injection operation to increase the temperature of the engine exhaust.

  Important: **The assist/reset-regeneration icon indicates that the exhaust temperature discharged from of your machine may be hotter than during regular operation.**
- While operating the machine, run the engine at full engine speed when possible to promote DPF regeneration.
- The 

icon displays in the InfoCenter while the reset regeneration is processing.
- Whenever possible, do not shut off the engine or reduce engine speed while the reset regeneration is processing.

  Important: **Allow the machine to complete the reset regeneration process before shutting off the engine.**

  Note: The reset regeneration is finished processing when the 

icon disappears from the InfoCenter.

Parked Regeneration

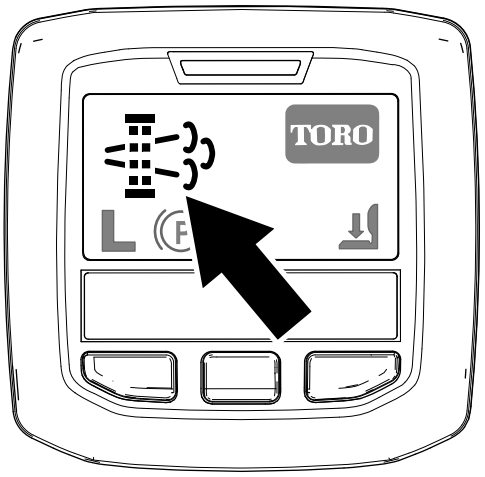

g214713

Figure 38
Parked-regeneration request icon

- The parked-regeneration requested icon displays in the InfoCenter (Figure 38).
- If a parked regeneration is needed, the InfoCenter displays engine warning SPN 3719, FMI 16 (Figure 39) and the engine computer derates engine power to 85%.

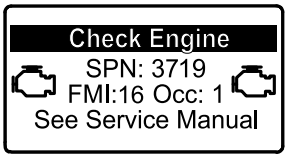

g213866

Figure 39

Important: **If you do not complete a parked regeneration within 2 hours, the engine computer derates engine power to 50%.**

- A parked regeneration requires 30 to 60 minutes to complete.
- If you are authorized by your company, you need the PIN code to perform the parked-regeneration process.

Preparing to Perform a Parked or Recovery Regeneration

1. Ensure that the machine has at least 1/4 tank of fuel.
2. Move the machine outside to an area away from combustible materials.
3. Park the machine on a level surface.
4. Ensure that the traction control or motion-control levers are in the NEUTRAL position.
5. If applicable, lower the cutting units and shut them off.

6. Engage the parking brake.
7. Set the throttle to the low IDLE position.

Performing a Parked Regeneration

Note: For instructions on unlocking protected menus, refer to Accessing Protected Menus (page 20).

1. Access the protected menu and unlock the protected settings submenu (Figure 40); refer to Accessing Protected Menus (page 20).

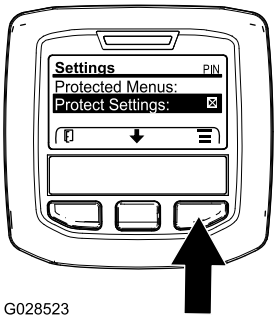

g028523

Figure 40

2. Navigate to the MAIN MENU, press the center button to scroll down to the SERVICE MENU, and press the right button to select the SERVICE option (Figure 41).

   Note: The InfoCenter should display the PIN indicator in the upper right corner of the display.

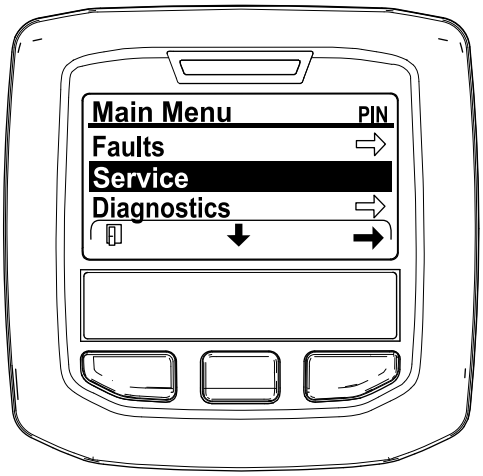

g212371

Figure 41

3. In the SERVICE MENU, press the middle button until the DPF REGENERATION options displays, and press the right button to select the DPF REGENERATION option (Figure 42).

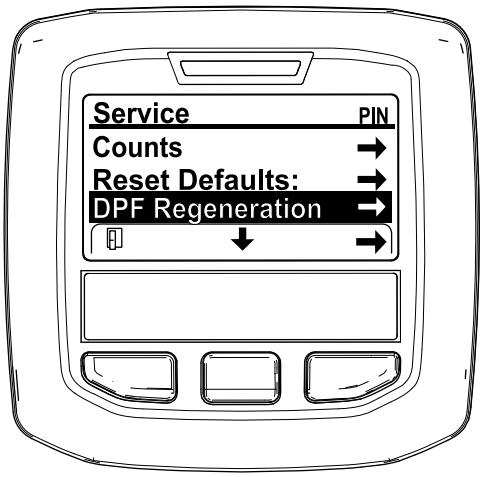

g212138

Figure 42

4. When the “Initiate DPF Regen. Are you sure?” message displays, press the center button (Figure 43).

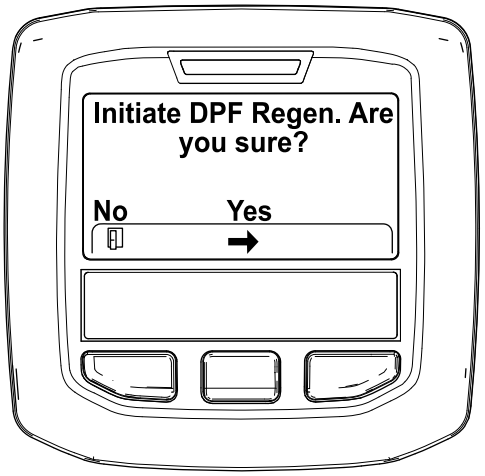

g212125

Figure 43

5. If the coolant temperature is below 60°C (140°F) the “Insure is running and above 60C/140F” message displays. (Figure 44).

   Observe the temperature in the display, and run the machine at full throttle until the temperature reaches 60°C (140°F), then press the center button.

   Note: If the coolant temperature is above 60°C (140°F) this screen is skipped.



g211986

Figure 44

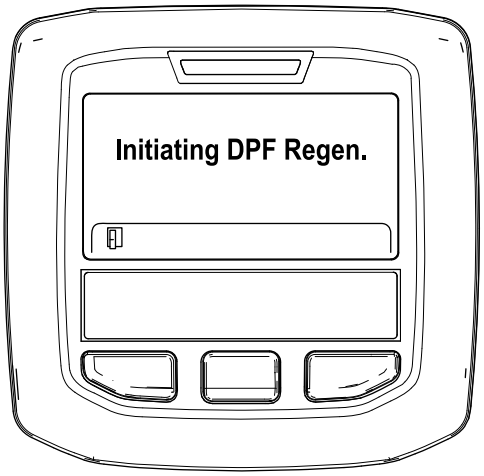

g212405

Figure 46

6. Move the throttle control to LOW IDLE and press the center button (Figure 45).

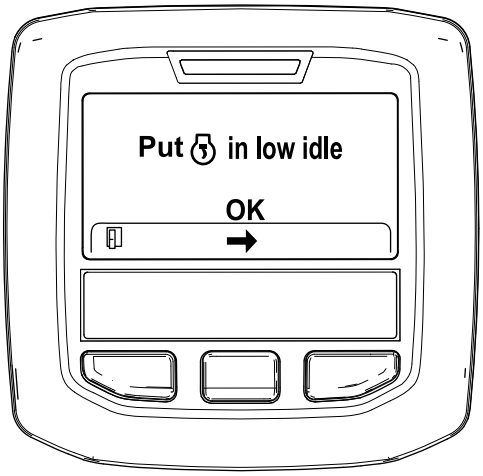

g212372

Figure 45

7. The following messages display as the parked regeneration process begins:
   A. The “Initiating DPF Regen.” message displays (Figure 46).
   B. The “Waiting on ” message displays (Figure 47).



g212406

Figure 47

   C. The computer determines whether the regeneration runs. One of the following messages displays in the InfoCenter:
      - If the regeneration is allowed, the “Regen Initiated. Allow up to 30 minutes for completion” message displays in the InfoCenter, wait for the machine to complete the parked regeneration process (Figure 48).

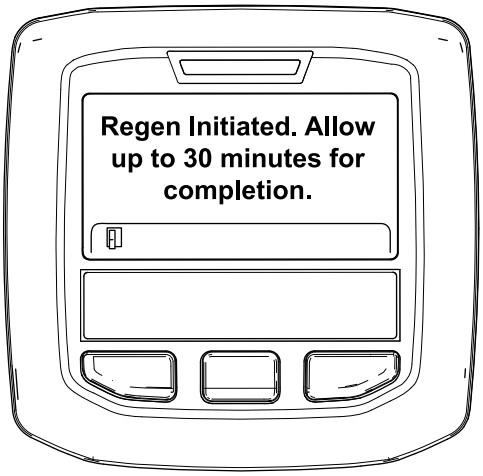

g213424

Figure 48

- If the regeneration process is not allowed by the engine computer, the “DPF Regen Not Allowed” message displays in the InfoCenter (Figure 49). Press the left button to exit to the home screen

  Important: **If you did not meet all the requirements for regeneration or if less than 50 hours have passed since the last regeneration, the “DPF Regen Not Allowed” message appears.**

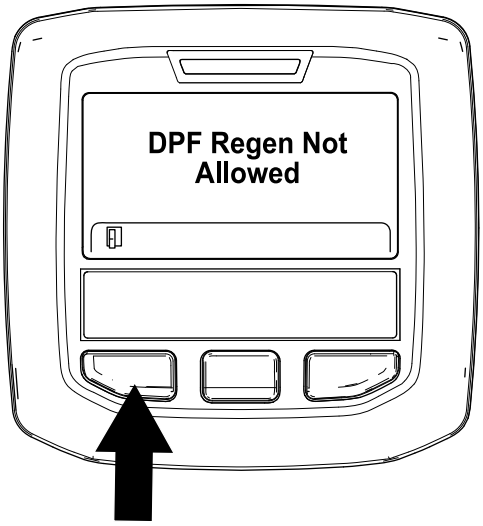

g212410

Figure 49

8. While the regeneration is running, the InfoCenter returns to the home screen and shows the following icons:



The engine is cold—wait.



The engine is warm—wait.



The engine hot—regeneration in progress (percent complete).

9. The parked regeneration is complete when the “Regen Complete” message displays in the InfoCenter. Press the left button to exit to the home screen (Figure 50).

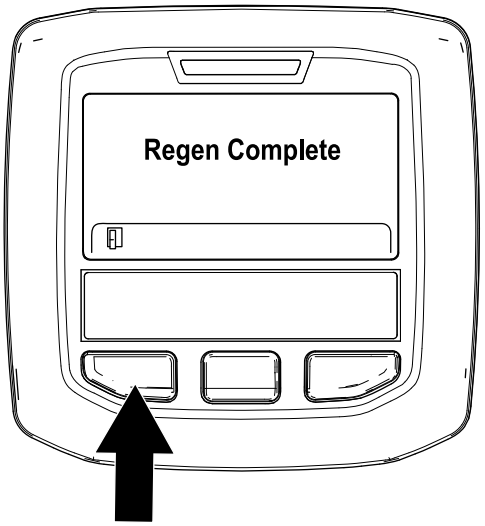

g212404

Figure 50

Recovery Regeneration

- If you ignore the request for a parked regeneration (displayed in the InfoCenter) and continue to operate the machine, a critical amount of soot builds up in the DPF.
- If a recovery regeneration is needed, the InfoCenter displays engine warning SPN 3719, FMI 16 (Figure 51) and the engine computer derates engine power to 85%.

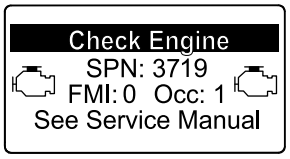

g213867

Figure 51

Important: **If you do not complete a recovery regeneration within 15 minutes, the engine computer derates engine power to 50%.**

- Perform a recovery-regeneration whenever there is a loss of engine power and a parked regeneration cannot effectively clean the DPF of soot.
- A recovery regeneration requires up to 4 hours to complete.
- You need a distributor technician to perform the recovery regeneration process; contact your Authorized Toro Distributor.

Using Cruise Control

The cruise-control switch locks in the pedal position to maintain the desired ground speed. Pressing the rear of the switch turns cruise control off, the middle position of the switch enables the cruise-control function, and the front of the switch sets the desired ground speed.

Note: Pressing either the brake pedal or moving the traction pedal into the reverse position, for 1 second, will also disengage the cruise control.

Using the Engine-Speed Switch

The engine speed switch has 2 modes to change the engine speed. By momentarily tapping the switch, the engine speed can be increased or decreased in 100-rpm increments. By holding the switch down, the engine will automatically move to HIGH or LOW IDLE, depending on which side of the switch you press.

Adjusting the Mowing Speed

Supervisor (Protected Menu)

Allows the supervisor to set the maximum mowing speed, in increments of 50%, 75% or 100%, at which the operator can mow (low range).

Refer to Using the InfoCenter Control (page 17) for the procedure to set the mow speed.

Operator

Allows the operator to adjust the maximum mowing speed (low range), within the supervisors pre-adjusted settings. When in the InfoCenter splash or main screen, press the middle button (icon) to adjust the speed.

Note: When switching between low and high ranges, the settings will transfer based on the previous setting. The settings are reset when the machine is turned off.

Note: This feature may also be used in conjunction with cruise control.

Adjusting the Transport Speed

Supervisor (Protected Menu)

Allows the supervisor to set the maximum transport speed, in increments of 50%, 75% or 100%, at which the operator can transport (high range).

Refer to Using the InfoCenter Control (page 17) for the procedure to set the transport speed.

Operator

Allows the operator to adjust the maximum transport speed (high range), within the supervisors pre-adjusted settings. When in the InfoCenter splash or main screen, press the middle button (icon) to adjust the speed.

Note: When switching between low and high ranges, the settings will transfer based on the previous setting. The settings are reset when the machine is turned off.

Note: This feature may also be used in conjunction with cruise control.

Understanding the Operating Characteristics of the Machine

Practice driving the machine because it has a hydrostatic transmission and its characteristics are different than many turf-maintenance machines. Some points to consider when operating the traction unit, mower deck, or other implements, are the transmission, engine speed, load on the mower blades or other implement components, and the importance of the brakes.

With Toro Smart Power™, you do not have to manually balance the traction speed with the engine speed in heavy conditions. Smart Power prevents bogging down in heavy turf by automatically controlling the machine speed and optimizing cutting performance.

The brakes can be used to assist in turning the machine. However, use them carefully, especially on soft or wet grass because the turf may be torn accidentally. Another benefit of the brakes is to maintain traction. For example, in some slope conditions, the uphill wheel slips and loses traction. If this situation occurs, depress the uphill turn pedal gradually and intermittently until the uphill wheel stops slipping, thus, increasing traction on the downhill wheel.

Traction Assist is now automatic and requires no operator input. When a wheel starts to slip, flow is automatically split between the front and rear wheels to minimize wheel slip and loss of traction.

Use extra care when operating the machine on slopes. Ensure that the ROPS is in the raised position, the seat latch is properly secured and the seat belt is buckled. Drive slowly and avoid sharp turns on slopes to prevent roll overs. For steering control, the mower deck must be lowered when going downhill.

Before stopping the engine, disengage all controls and change the throttle to LOW IDLE. Changing the throttle to LOW IDLE reduces high engine speed, noise, and vibration. Turn the key to the OFF position to stop the engine.

Before transporting the machine, raise the mower decks and secure the transport latches (Figure 52).

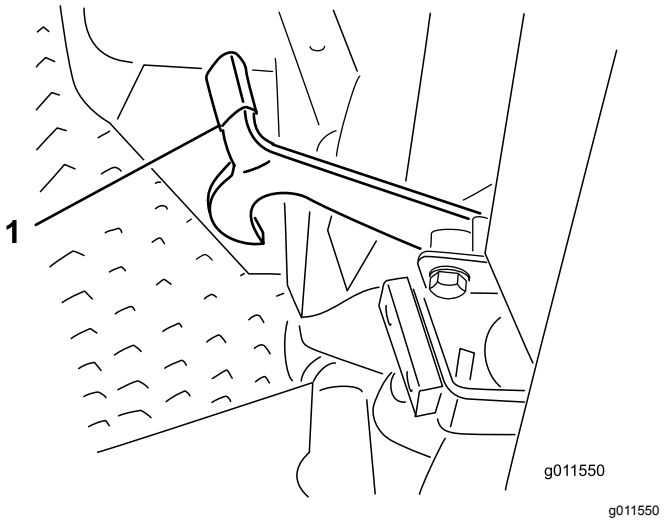

g011550

Figure 52

1. Transport latch (wing mower decks)

Operating Tips

Mowing When the Grass Is Dry

Mow either in the late morning to avoid the dew, which causes grass clumping, or late afternoon to avoid the damage that direct sunlight can cause on the sensitive, freshly mowed grass.

Selecting the Proper Height-of-Cut Setting

Remove approximately 25 mm (1 inch) or no more than 1/3 of the grass blade when cutting. In exceptionally lush and dense grass, you may need to raise your height-of-cut setting.

Mowing at Correct Intervals

Grass grows at different rates at different times of the year. To maintain the same cutting height, mow more often in early spring. As the grass growth rate slows in mid summer, mow less frequently. If you cannot mow for an extended period, first mow at a high cutting height, then mow again 2 days later at a lower height setting.

Transporting

Use the transport latches when transporting over long distances, rough terrain, or when trailering.

After Operating

To ensure optimum performance, clean the underside of the mower housing after each use. If residue

builds up in the mower housing, cutting performance decreases.

Also, remove any debris which may have collected between the deck-lift cylinders and the foam deck pads (Figure 53).

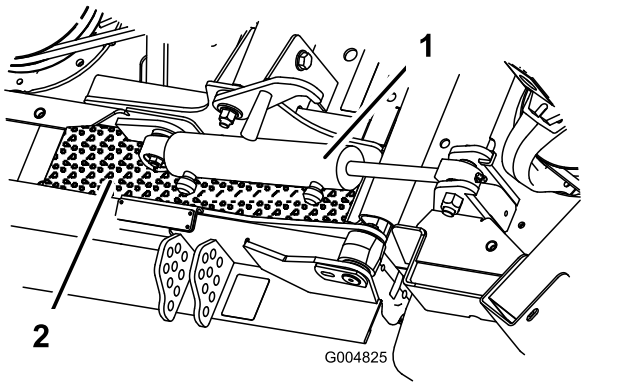

Figure 53

1. Deck-lift cylinder
2. Foam deck pad

Mower Deck Pitch

A blade pitch of 8 to 11 mm (5/16 to 7/16 inch) is recommended. A pitch larger than 8 to 11 mm (5/16 to 7/16 inch) results in less power required, larger clippings, and a poorer quality of cut. A pitch less than 8 to 11 mm (5/16 to 7/16 inch) results in more power required, smaller clippings and a better quality of cut.

After Operation

After Operation Safety

General Safety

- Clean grass and debris from the cutting units, drives, mufflers, and engine to help prevent fires. Clean up oil or fuel spills.
- Shut off the fuel while storing or transporting the machine, if applicable.
- Disengage the drive to the attachment whenever you are transporting or not using the machine.
- Allow the engine to cool before storing the machine in any enclosure.
- Never store the machine or fuel container where there is an open flame, spark, or pilot light, such as on a water heater or on other appliances.

Pushing or Towing the Machine

In an emergency, the machine can be moved forward by actuating the bypass valve in the variable-displacement hydraulic pump and pushing or towing the machine.

Important: **Do not push or tow the machine faster than 3 to 4.8 km/h (2 to 3 mph), because internal-transmission damage may occur. The bypass valves must be open whenever the machine is pushed or towed.**

1. Raise the seat and locate the bypass valves, which are located below the front of the fuel tank (Figure 54).

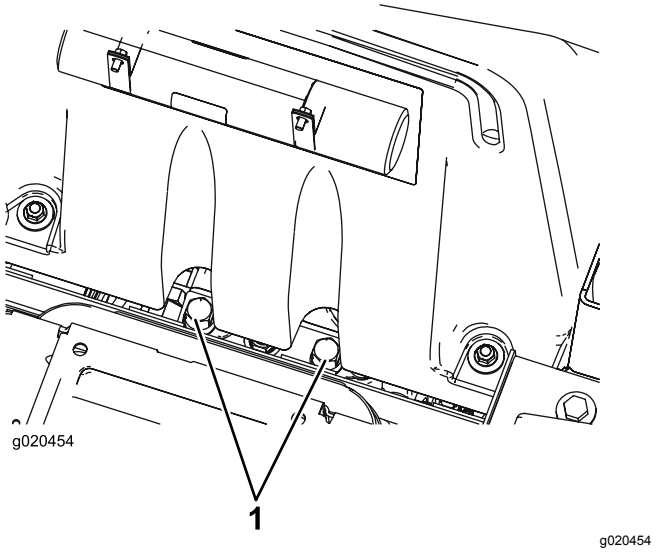

Figure 54

1. Bypass valve

2. Rotate each valve 3 turns counter-clockwise to open and allow oil to bypass internally.

   Note: Do not open more than 3 turns. Because fluid is bypassed, the machine can be slowly moved without damaging the transmission.

3. Close the bypass valves before starting the engine.
4. Torque to 70 N·m (52 ft-lb) to close the valve.

Important: **If you must push or tow the machine in reverse, bypass the check valve in the 4-wheel drive manifold. To bypass the check valve, connect a hose assembly that consists of a hose (Part No. 95-8843), 2 coupler fittings (No. 95-0985), and 2 hydraulic fittings (No. 340-77) to the reverse-traction, pressure-test port, located on the hydrostat, and to the port located between ports M8 and P2 on the rear traction manifold, located behind the front tire.**

Locating the Jacking Points

⚠ WARNING

Always use jack stands. Do not rely on a jack or hoist to hold the machine.

Mechanical or hydraulic jacks may fail to support the machine and cause a serious injury.

There are jacking points located at the front and rear of the machine.

- On the frame at the inside of each front drive tire
- At the center of the rear axle

Hauling the Machine

- Use care when loading or unloading the machine into a trailer or a truck.
- Use full-width ramps for loading the machine into a trailer or a truck.
- Tie the machine down securely using straps, chains, cable, or ropes. Both front and rear straps should be directed down and outward from the machine.

Locating the Tie-Down Points

There are tie downs located at the front and rear sides of the machine (Figure 55).

Note: Use properly-rated DOT-approved straps in 4 corners to tie down the machine.

- 2 on the front of the operator's platform
- Rear bumper

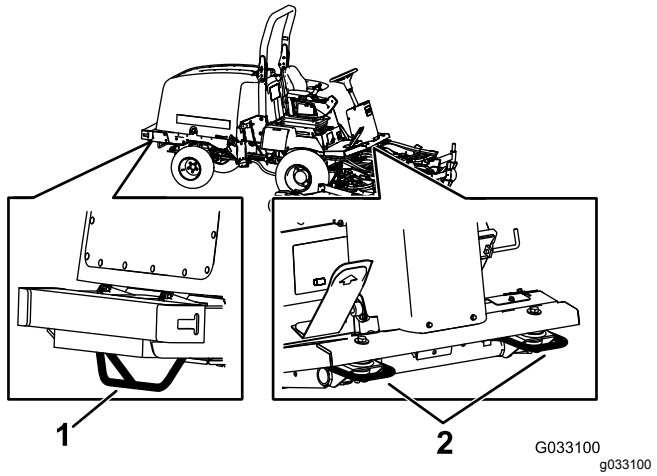

Figure 55

1. Rear tie-down point
2. Front tie-down points

Maintenance

Note: Determine the left and right sides of the machine from the normal operating position.

Download a free copy of the schematic by visiting www.Toro.com and searching for your machine from the Manuals link on the home page.

Recommended Maintenance Schedule(s)

Maintenance Service Interval	Maintenance Procedure
After the first hour	• Torque the wheel-lug nuts.
After the first 10 hours	• Torque the wheel-lug nuts. • Check the alternator-belt tension. • Check the blade-drive-belt tension.
After the first 200 hours	• Change the front planetary-gear oil. • Change the rear-axle lubricant. • Change the hydraulic filters.
Before each use or daily	• Check the tire pressure. • Check the safety-interlock switches. • Check the air-cleaner indicator • Check the engine-oil level. • Drain water or other contaminants from the water separator. • Check the coolant level. • Check the hydraulic-fluid level. • Remove all debris and chaff from the engine compartment, radiator, and oil cooler.
Every 25 hours	• Check the electrolyte level (or every 30 days if the machine is in storage).
Every 50 hours	• Lubricate all bearings and bushings. • Inspect the air cleaner. • Check the condition of the battery. • Check the blade-drive-belt tension.
Every 100 hours	• Inspect the cooling-system hoses and clamps. • Check the alternator-belt tension.
Every 200 hours	• Torque the wheel-lug nuts.
Every 250 hours	• Change the engine oil and filter.
Every 400 hours	• Service the air cleaner (earlier if the air cleaner indicator shows red, and more frequently in extremely dirty or dusty conditions). • Replace the filter canister. • Inspect the fuel lines and connections. • Check the planetary-gear-drive oil (check if you notice external leakage). • Check for end-play in the planetary drives. • Check the rear-axle-gearbox lubricant.
Every 800 hours	• Drain and clean the fuel tank (also if the fuel system is contaminated). • Change the front planetary-gear oil. • Change the rear-axle lubricant. • Check the rear wheel toe-in. • Inspect the blade-drive belt. • Change the hydraulic fluid. • Change the hydraulic filters. • Inspect the mower deck caster-wheel assemblies.
Every 1,000 hours	• Check and adjust the engine-valve clearance.

Maintenance Service Interval	Maintenance Procedure
Every 6,000 hours	• Disassemble, clean, and assemble the soot filter of the DPF. or clean the soot filter if engine faults SPN 3720 FMI 16, SPN 3720 FMI 0, or SPN 3720 FMI 16 display in the InfoCenter.
Every 2 years	• Flush the cooling system and replace the fluid. • Replace moving hoses.

⚠ CAUTION

If you leave the key in the ignition switch, someone could accidently start the engine and seriously injure you or other bystanders.

Remove the key from the ignition before you do any maintenance.

Daily Maintenance Checklist

Duplicate this page for routine use.

Maintenance Check Item	For the week of:						
	Monday	Tuesday	Wednesday	Thursday	Friday	Saturday	Sunday
Check the safety-interlock operation.							
Check the brake operation.							
Check the engine-oil level.							
Check the cooling-system-fluid level.							
Drain the water/fuel separator.							
Check the air filter, dust cup, and burp valve.							
Check for unusual engine noises.[2]							
Check the radiator and screen for debris							
Check for unusual operating noises.							
Check the hydraulic-system-oil level.							
Check the hydraulic hoses for damage.							
Check for fluid leaks.							
Check the fuel level.							
Check the tire pressure.							
Check the instrument operation.							
Check the height-of-cut adjustment.							
Lubricate all the grease fittings.[2]							

Maintenance Check Item	For the week of:						
	Monday	**Tuesday**	**Wednesday**	**Thursday**	**Friday**	**Saturday**	**Sunday**
Touch up any damaged paint.							
[1]Check the glow plug and injector nozzles if starting is hard, there is excess smoke, or rough running is noted.							
[2]Immediately **after every** washing, regardless of the interval listed.							

Important: **Refer to your engine operator's manual for additional maintenance procedures.**

Notation for Areas of Concern

Inspection performed by:		
Item	**Date**	**Information**

Service Interval Chart

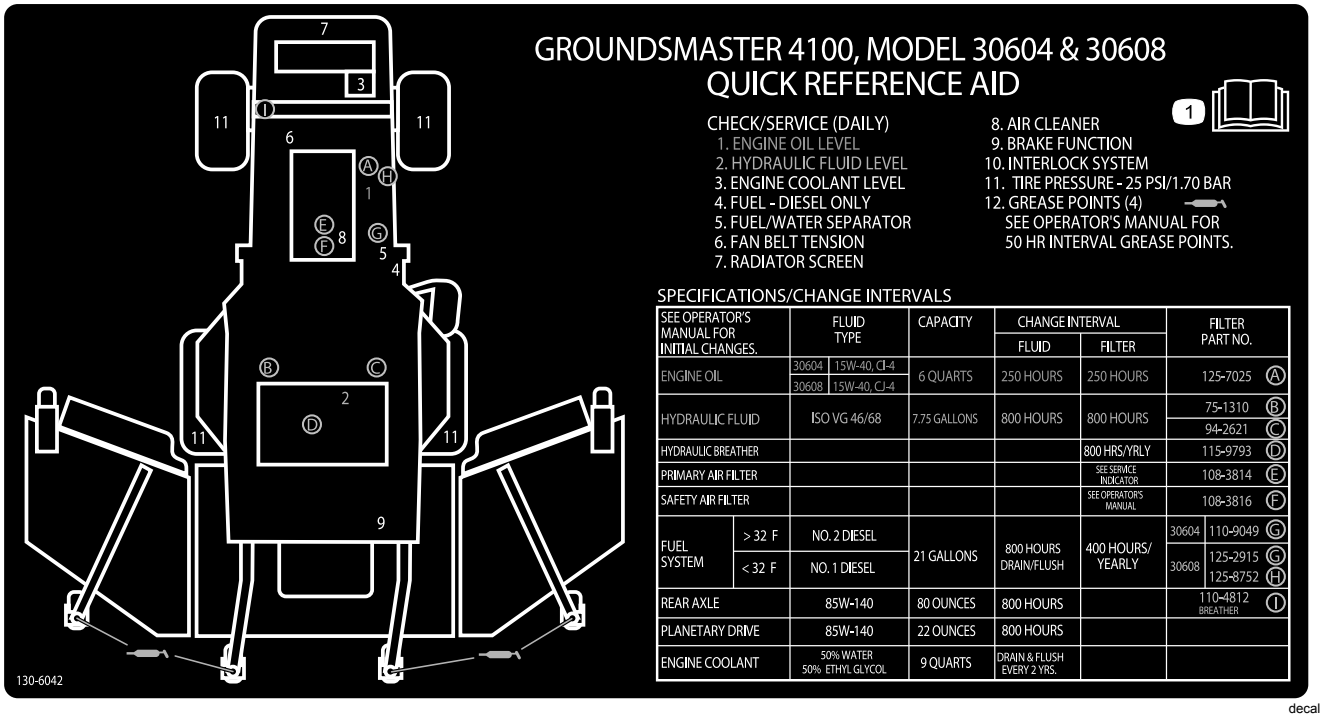

SEE OPERATOR'S MANUAL FOR INITIAL CHANGES.		FLUID TYPE	CAPACITY	CHANGE INTERVAL		FILTER PART NO.	
				FLUID	FILTER		
ENGINE OIL		30604 15W-40, CI-4 30608 15W-40, CJ-4	6 QUARTS	250 HOURS	250 HOURS	125-7025	A
HYDRAULIC FLUID		ISO VG 46/68	7.75 GALLONS	800 HOURS	800 HOURS	75-1310	B
						94-2621	C
HYDRAULIC BREATHER					800 HRS/YRLY	115-9793	D
PRIMARY AIR FILTER					SEE SERVICE INDICATOR	108-3814	E
SAFETY AIR FILTER					SEE OPERATOR'S MANUAL	108-3816	F
FUEL SYSTEM	> 32 F	NO. 2 DIESEL	21 GALLONS	800 HOURS DRAIN/FLUSH	400 HOURS/ YEARLY	30604 110-9049	G
	< 32 F	NO. 1 DIESEL				30608 125-2915	G
						125-8752	H
REAR AXLE		85W-140	80 OUNCES	800 HOURS		110-4812 BREATHER	I
PLANETARY DRIVE		85W-140	22 OUNCES	800 HOURS			
ENGINE COOLANT		50% WATER 50% ETHYL GLYCOL	9 QUARTS	DRAIN & FLUSH EVERY 2 YRS.			

decal130-6042

Figure 56

Pre-Maintenance Procedures

Pre-Maintenance Safety

- Keep all parts of the machine in good working condition and all hardware tightened, especially blade-attachment hardware. Replace all worn or damaged decals.
- Never allow untrained personnel to service the machine.
- Before adjusting, cleaning, or repairing the machine, do the following:
  1. Move the machine to level ground.
  2. Disengage the drives.
  3. Lower the cutting units.
  4. Move the traction pedal to the NEUTRAL position.
  5. Engage the parking brake.
  6. Move the throttle switch to the LOW-IDLE position.
  7. Shut off the engine and remove the key.
  8. Wait for all moving parts to stop.
- Whenever you park or store the machine, or leave it unattended, lower the cutting units unless you use a positive mechanical lock.
- If possible, do not perform maintenance on the machine while the engine is running. If you must run the engine to perform maintenance on the machine, keep your hands, feet, other body parts,

and clothing away from all moving parts, the mower-discharge area, and the underside of the mowers.

- Do not touch parts of the machine or an attachment that may be hot from operation. Allow the parts to cool before attempting to maintain, adjust, or service them.
- Use jack stands to support the machine and/or its components when required.
- Carefully release pressure from components with stored energy.
- If your machine requires major repairs or if you desire assistance, contact an Authorized Toro Distributor.
- Use only genuine Toro replacement parts and accessories. Replacement parts and accessories made by other manufacturers could be dangerous, and such use could void the product warranty.

Preparing the Machine for Maintenance

1. Ensure that the PTO is disengaged.
2. Park the machine on a level surface.
3. Set the parking brake.
4. Lower the mower deck(s) if necessary.
5. Shut off the engine and wait for all moving parts to stop.
6. Turn the ignition key to the STOP position and remove it.
7. Allow machine components to cool before performing maintenance.

Removing the Hood

1. Unlatch and raise the hood.
2. Remove the hairpin cotter securing the hood pivot to the mounting brackets (Figure 57).

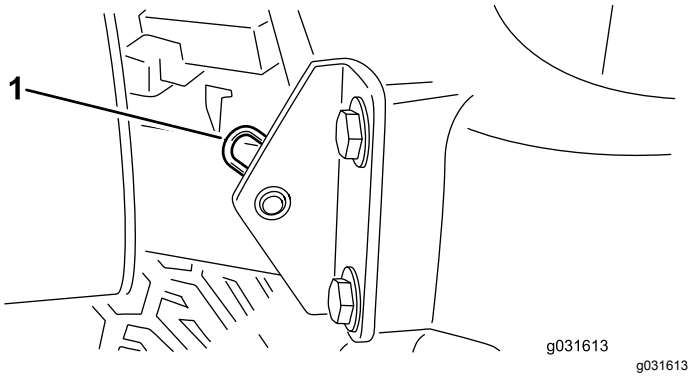

Figure 57

1. Hairpin cotter

3. Slide the hood to the right side, lift the other side, and pull it out of the brackets.

Note: Reverse this procedure to install the hood.

Lubrication

Greasing the Bearings and Bushings

Service Interval: Every 50 hours

The machine has grease fittings that you must lubricate regularly with No. 2 lithium grease. Also, lubricate the machine immediately after every washing.

The grease-fitting locations and quantities are:

Traction Unit

- 2 brake pedal pivot-shaft bearings (Figure 58)
- 2 front and rear-axle-pivot bushings (Figure 59)
- 2 steering-cylinder-ball joints (Figure 60)
- 2 tie-rod-ball joints (Figure 60)
- 2 king-pin bushings (Figure 60).

Note: Lubricate only the top fitting on the king pin annually (2 pumps).

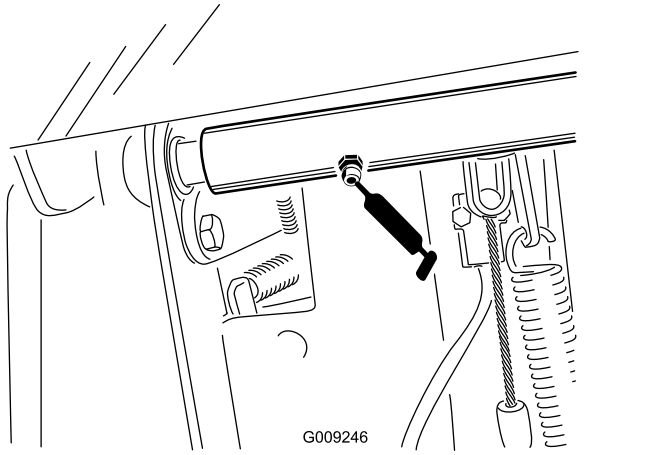

Figure 58

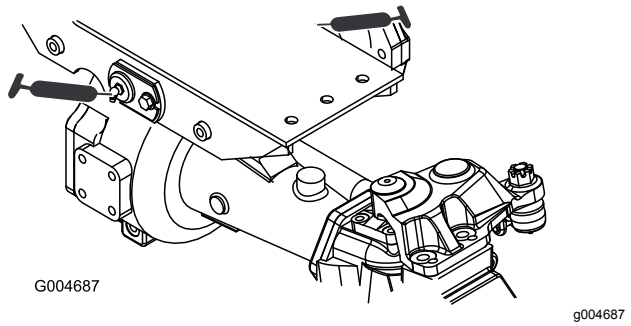

Figure 59

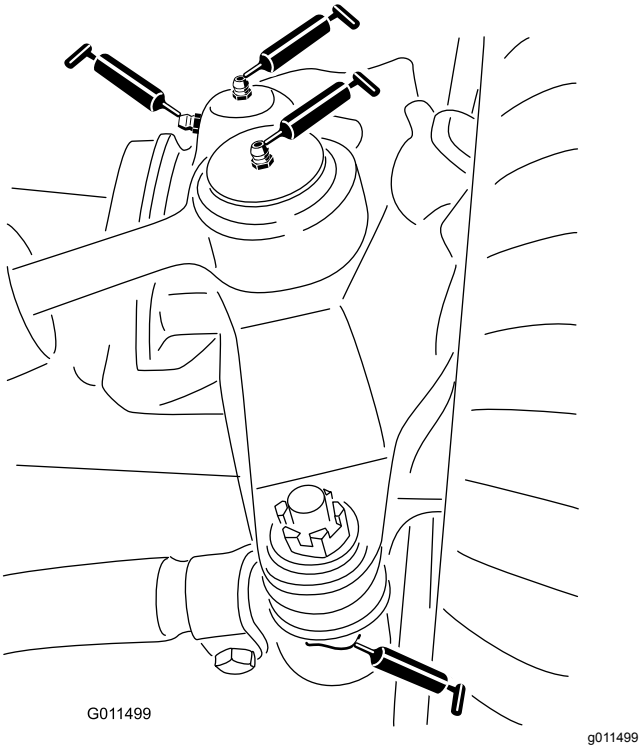

Figure 60

Center Mower Deck

Note: You may need to raise the deck to expose the grease fittings for the latch pivot and the lower link.

- 2 latch pivots (Figure 62)

  Note: You may need to manually trip the latches to gain access to the grease fittings (Figure 61). Use a prybar to close and open the latch.
- 2 castor-fork-shaft bushings (Figure 63)
- 3 spindle-shaft bearings—located under the pulley (Figure 64)
- 2 idler-arm-pivot bushings (Figure 64)

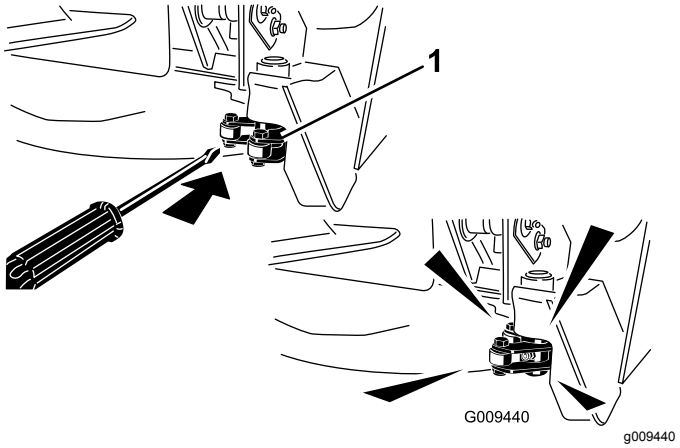

Figure 61

1. Latch

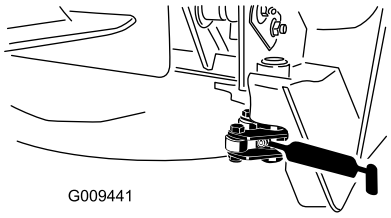

g009441

Figure 62

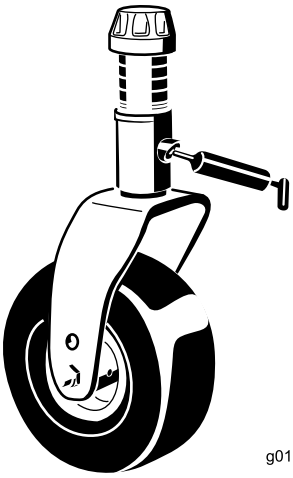

g011557

g011557

Figure 63

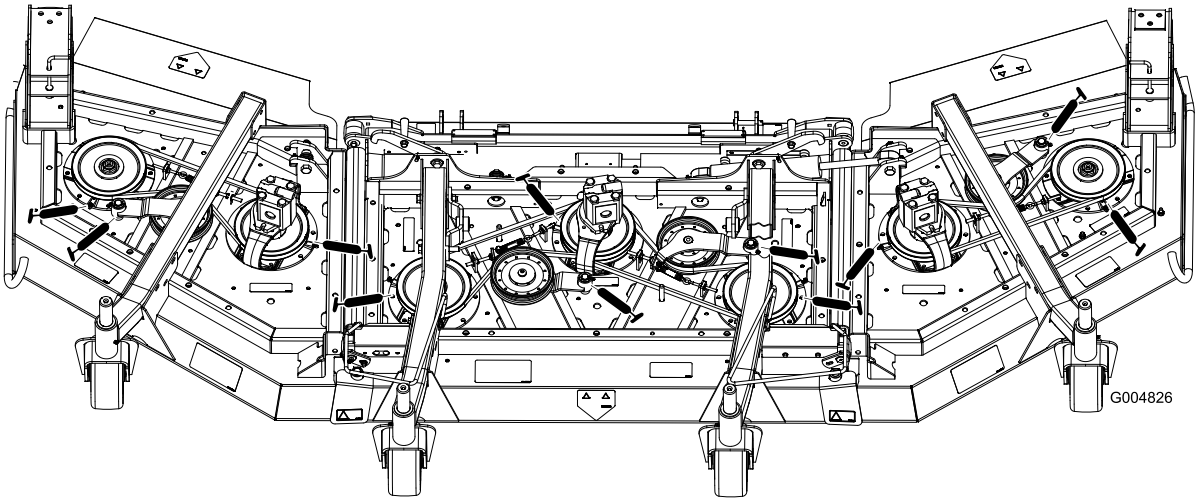

g004826

Figure 64

Center-Deck-Lift Assemblies

- 2 (each side) lift-arm-cylinder bushings (Figure 65)
- 2 lift-arm ball joints (Figure 66)

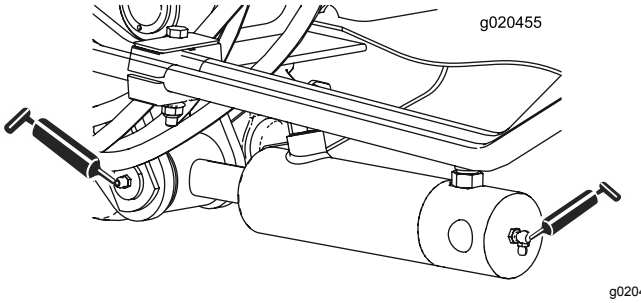

g020455

g020455

Figure 65

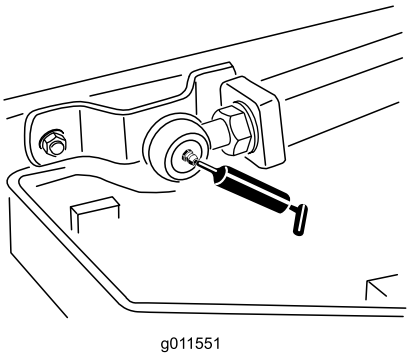

g011551

g011551

Figure 66

Wing-Deck-Lift Assemblies

4 wing-deck-lift cylinder (Figure 67)

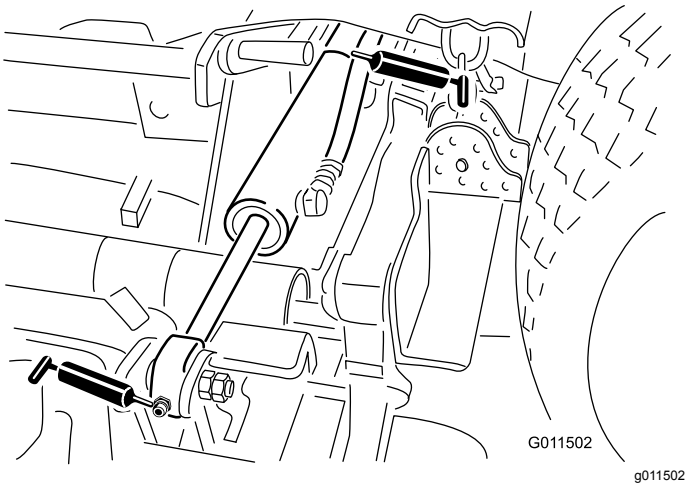

Figure 67

Wing Mower Decks

- 1 caster-fork-shaft bushing (Figure 68)
- 2 (each side) spindle-shaft bearings—located under the pulley
- 1 idler-arm-pivot bushings—located on the idler arm

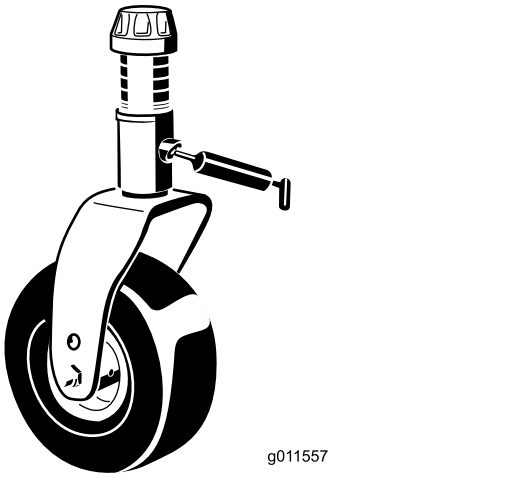

Figure 68

Engine Maintenance

Engine Safety

Shut off the engine before checking the oil or adding oil to the crankcase.

Servicing the Air Cleaner

Service Interval: Before each use or daily—Check the air-cleaner indicator

Every 50 hours—Inspect the air cleaner.

Every 400 hours—Service the air cleaner (earlier if the air cleaner indicator shows red, and more frequently in extremely dirty or dusty conditions).

Check the air-cleaner body for damage, which could cause an air leak. Replace it if it is damaged. Check the whole intake system for leaks, damage, or loose hose clamps.

Service the air-cleaner filter only when the service indicator requires it (Figure 69). Changing the air filter before it is necessary only increases the chance of dirt entering the engine when you remove the filter.

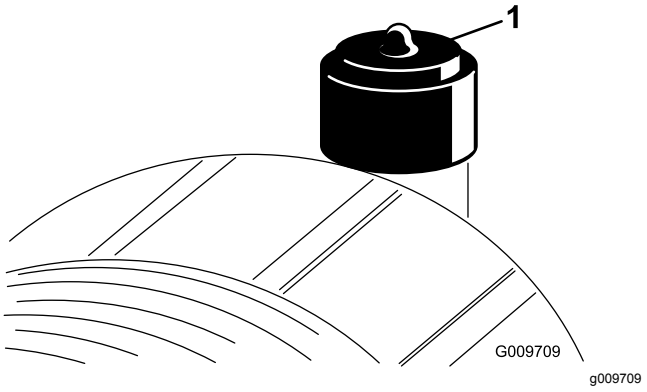

Figure 69

1. Air-cleaner indicator

Important: **Be sure that the cover is seated correctly and seals with the air-cleaner body.**

1. Replace the air cleaner (Figure 70).

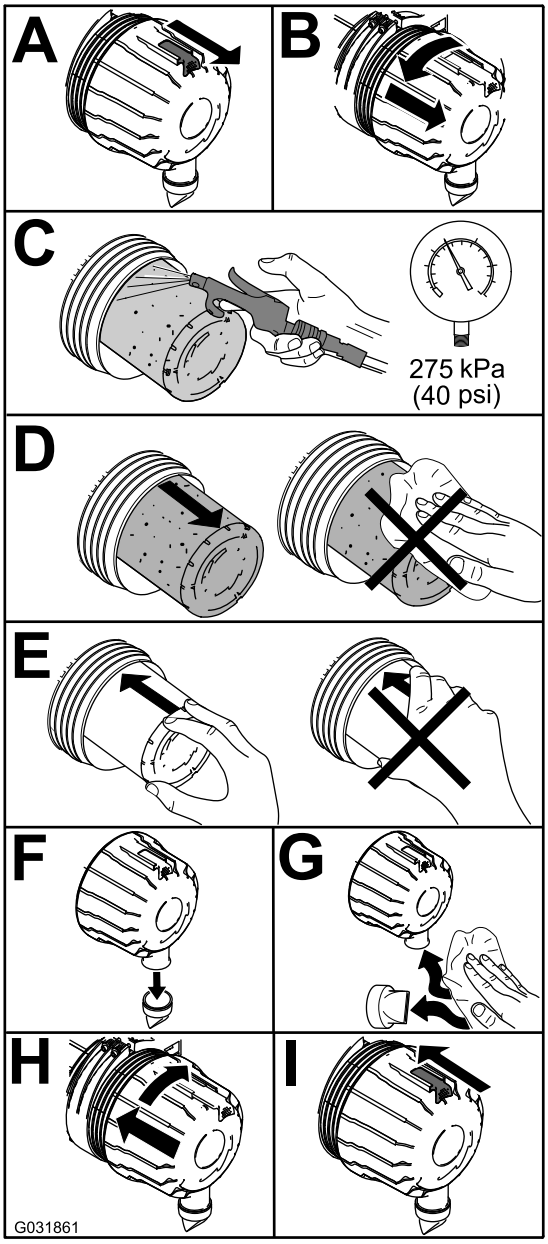

g031861

Figure 70

Note: Do not clean the used element due to the possibility of damage to the filter media.

Important: **Never attempt to clean the safety filter (Figure 71). Replace the safety filter after every 3 primary filter services.**

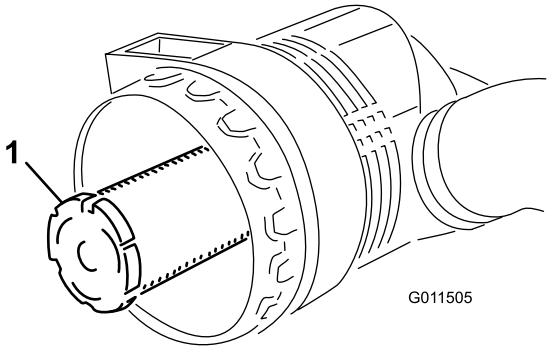

g011505

Figure 71

1. Air-cleaner safety filter

2. Reset the indicator (Figure 69) if it shows red.

Servicing the Engine Oil

Oil Specification

Use high-quality, low-ash engine oil that meets or exceeds the following specifications:

- API service category CJ-4 or higher
- ACEA service category E6
- JASO service category DH-2

Important: **Using engine oil other than API CJ-4 or higher, ACEA E6, or JASO DH-2 may cause the diesel particulate filter to plug or cause engine damage.**

Use the following engine oil viscosity grade:

- Preferred oil: SAE 15W-40 (above 0°F)
- Alternate oil: SAE 10W-30 or 5W-30 (all temperatures)

Toro Premium Engine Oil is available from your Authorized Toro Distributor in either 15W-40 or 10W-30 viscosity grades. See the parts catalog for part numbers.

Checking the Engine-Oil Level

Service Interval: Before each use or daily

The engine is shipped with oil in the crankcase; however, the oil level must be checked before and after the engine is first started.

Important: **Check the engine oil daily. If the engine-oil level is above the Full mark on the dipstick, the engine oil may be diluted with fuel; If the engine oil level is above the Full mark, change the engine oil.**

The best time to check the engine oil is when the engine is cool before it has been started for the day. If it has already been run, allow the oil to drain back

down to the sump for at least 10 minutes before checking. If the oil level is at or below the Add mark on the dipstick, add oil to bring the oil level to the Full mark. **Do not overfill the engine with oil**.

Important: **Keep the engine oil level between the upper and lower limits on the dipstick; the engine may fail if you run it with too much or too little oil.**

1. Park the machine on a level surface.
2. Check the engine-oil level (Figure 72).

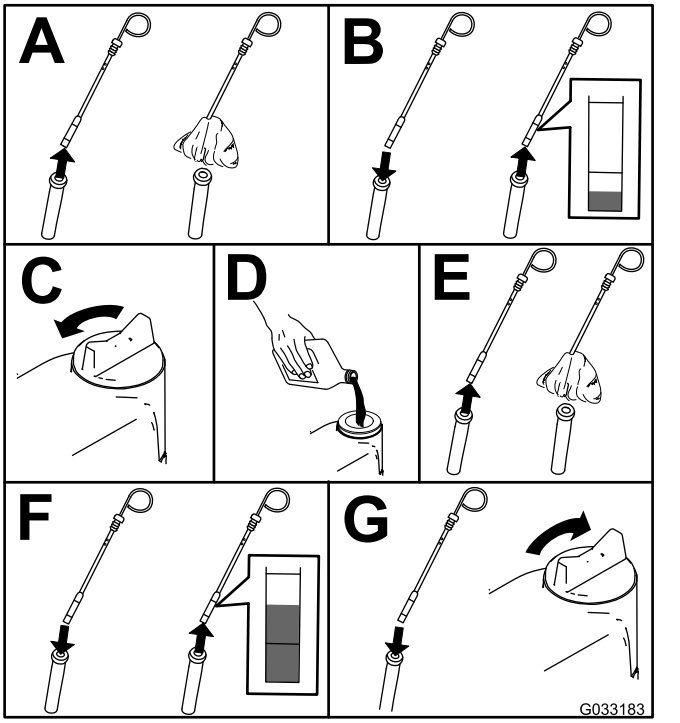

g033183

Figure 72

Note: When using different oil, drain all old oil from the crankcase before adding new oil.

Crankcase Oil Capacity

Approximately 5.7 L (6 US qt) with the filter.

Changing the Engine Oil and Filter

Service Interval: Every 250 hours

1. Start the engine and let it run 5 minutes to allow the oil to warm up.
2. Park the machine on a level surface, shut off the engine, remove the key, and wait for all moving parts to stop before leaving the operating position.
3. Replace the engine oil and filter (Figure 73).

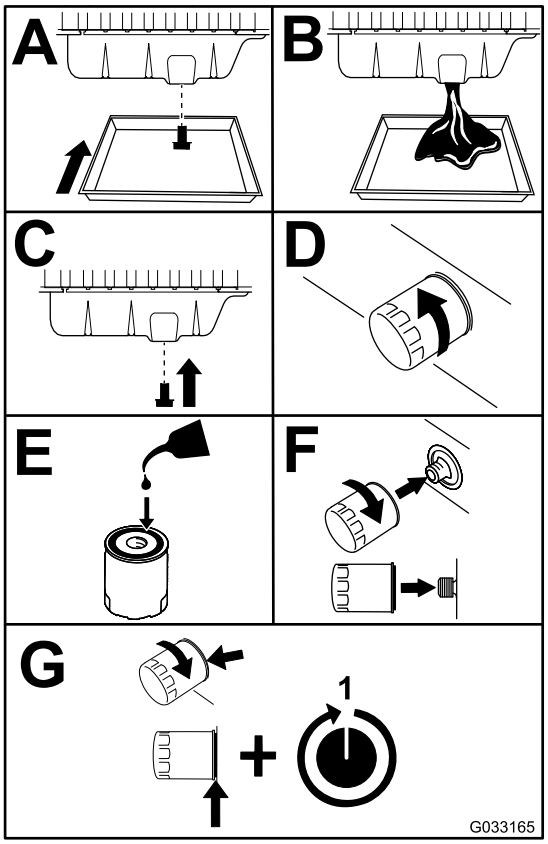

g033165

Figure 73

4. Add oil to the crankcase; refer to Checking the Engine-Oil Level (page 54).

Servicing the Diesel-Oxidation Catalyst (DOC) and the Soot Filter

Service Interval: Every 6,000 hours or clean the soot filter if engine faults SPN 3720 FMI 16, SPN 3720 FMI 0, or SPN 3720 FMI 16 display in the InfoCenter.

- If advisory message ADVISORY 179 displays in the InfoCenter, the DPF is nearing the recommended point for servicing the diesel-oxidation catalyst and the soot filter.

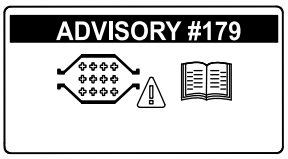

g213865

Figure 74

- If engine faults CHECK ENGINE SPN 3251 FMI 0, CHECK ENGINE SPN 3720 FMI 0, or CHECK ENGINE SPN 3720 FMI 16in the InfoCenter (Figure 75) display in the InfoCenter, clean the soot filter using the steps that follow:

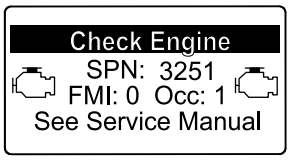

g214715

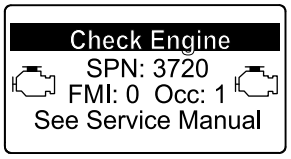

g213864

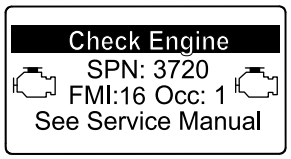

g213863

Figure 75

1. Refer to the Engine section in the *Service Manual* for information on disassembling and assembling the diesel-oxidation catalyst and the soot filter of the DPF.
2. Refer to your Authorized Toro Distributor for diesel-oxidation catalyst and the soot filter replacement parts or service.
3. Contact your Authorized Toro Distributor to have them reset the engine ECU after you install a clean DPF.

Fuel System Maintenance

Servicing the Water Separator

Service Interval: Before each use or daily—Drain water or other contaminants from the water separator.

Every 400 hours

Service the water separator as shown in Figure 76.

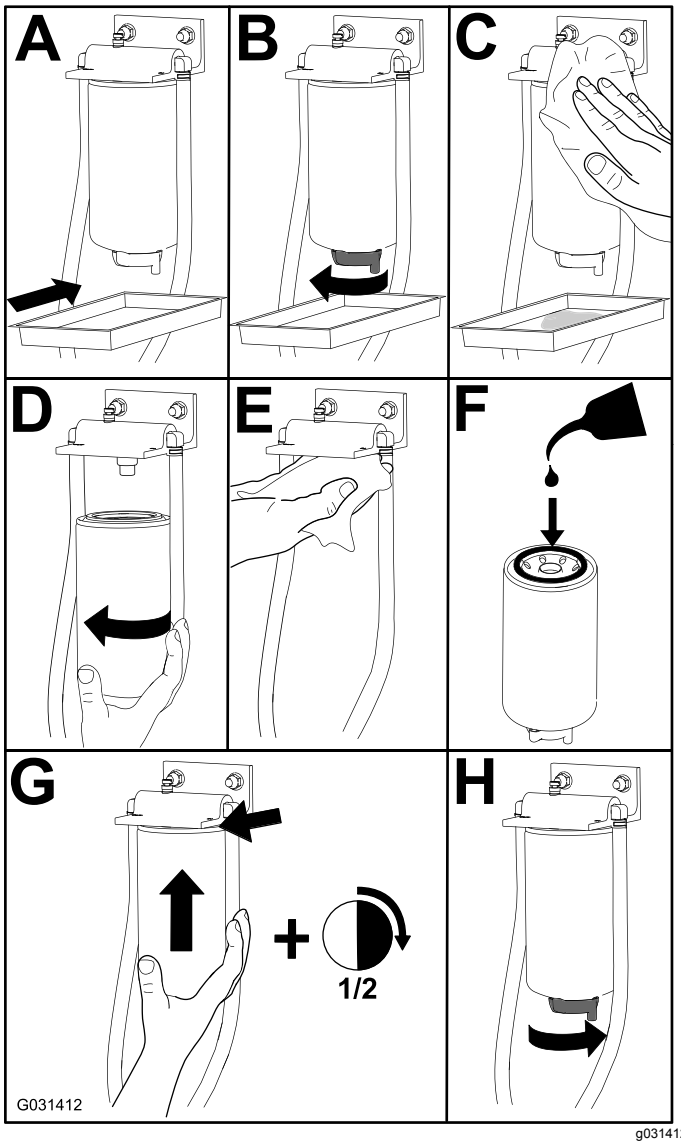

g031412

Figure 76

Servicing the Fuel System

Draining the Fuel Tank

Service Interval: Every 800 hours (also if the fuel system is contaminated).

Use clean fuel to flush out the tank.

Inspecting the Fuel Lines and Connections

Service Interval: Every 400 hours

Inspect the fuel lines and connections for deterioration, damage, or loose connections.

Electrical System Maintenance

Electrical System Safety

- Disconnect the battery before repairing the machine. Disconnect the negative terminal first and the positive last. Connect the positive terminal first and the negative last.
- Battery acid is poisonous and can cause burns. Avoid contact with your skin, eyes, and clothing. Protect your face, eyes, and clothing when working with a battery.
- Battery gases can explode. Keep cigarettes, sparks, and flames away from the battery.
- Charge the batteries in an open, well-ventilated area, away from sparks and flames. Unplug the charger before connecting or disconnecting the battery. Wear protective clothing and use insulated tools.
- Do not use a pressure washer near any electronic components.

WARNING

CALIFORNIA
Proposition 65 Warning

Battery posts, terminals, and related accessories contain lead and lead compounds, chemicals known to the State of California to cause cancer and reproductive harm. Wash hands after handling.

Servicing the Battery

Service Interval: Every 25 hours—Check the electrolyte level (or every 30 days if the machine is in storage).

Every 50 hours—Check the condition of the battery.

Important: **Before welding on the machine, disconnect the negative cable from the battery to prevent damage to the electrical system.**

Note: Keep the terminals and the entire battery case clean because a dirty battery discharges slowly. To clean the battery, wash the entire case with a solution of baking soda and water. Rinse with clear water. Coat the battery posts and cable connectors with Grafo 112X (skin-over) grease (Toro Part No. 505-47) or petroleum jelly to prevent corrosion.

1. Open the battery cover on the side of the shroud (Figure 77).

   Note: Press down on the flat surface above the battery cover to ease the removal of the cover (Figure 77).

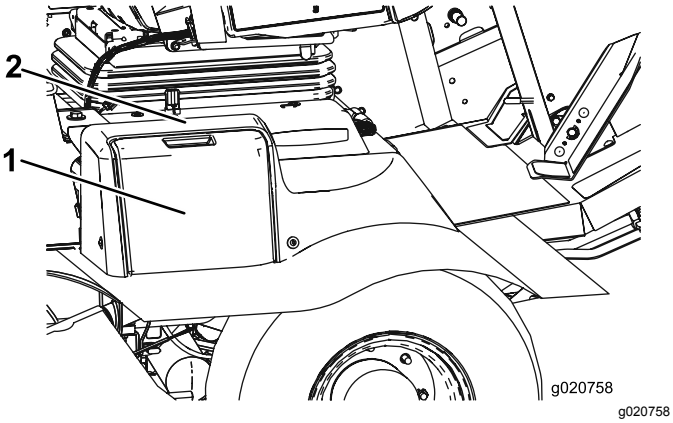

Figure 77

1. Battery cover
2. Press down here.

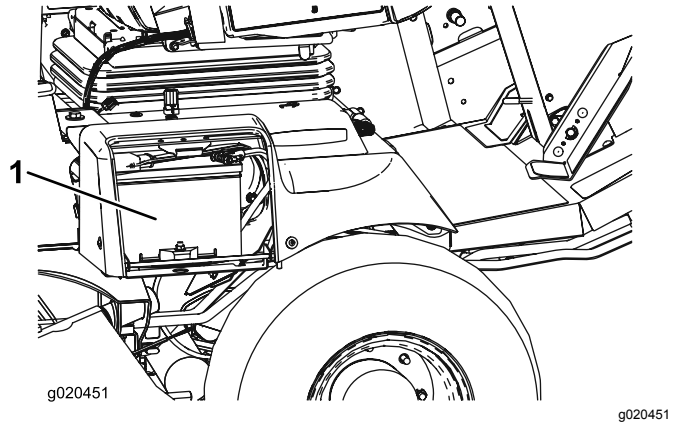

Figure 78

1. Battery

2. Remove the rubber boot from the positive terminal and inspect the battery.

⚠ WARNING

Battery terminals or metal tools could short against metal components causing sparks. Sparks can cause the battery gasses to explode, resulting in personal injury.

- **When removing or installing the battery, do not allow the battery terminals to touch any metal parts of the machine.**
- **Do not allow metal tools to short between the battery terminals and metal parts of the machine.**

⚠ WARNING

Incorrect battery cable routing could damage the machine and cables causing sparks. Sparks can cause the battery gasses to explode, resulting in personal injury.

- **Always *disconnect* the negative (black) battery cable before disconnecting the positive (red) cable.**
- **Always *connect* the positive (red) battery cable before connecting the negative (black) cable.**

3. Coat both battery connections with Grafo 112X (skin-over) grease (Toro Part No. 505-47), petroleum jelly, or light grease to prevent corrosion.
4. Slide the rubber boot over the positive terminal.
5. Close the battery cover.

Locating the Fuses

The traction-unit fuses are located under the power-center cover (Figure 79, Figure 80, and Figure 81).

Remove the 2 screws securing the power-center cover to the frame and remove the cover (Figure 79).

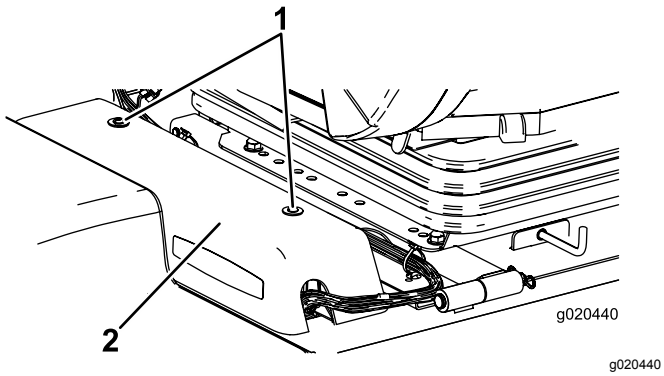

g020440

Figure 79

1. Power-center cover
2. Screws

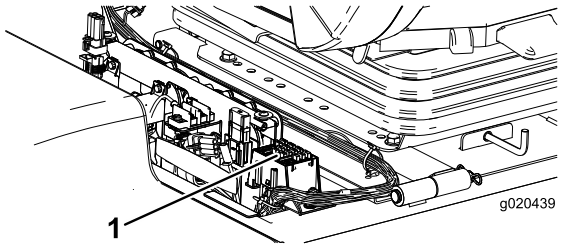

g020439

Figure 80

1. Fuses

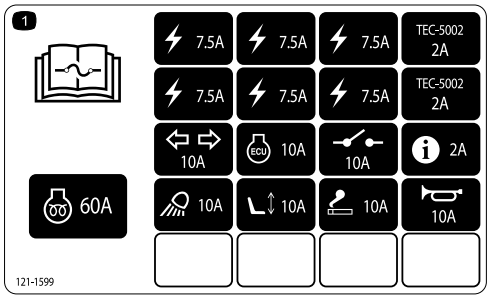

decal121-1599

Figure 81

Drive System Maintenance

Checking the Planetary-Gear-Drive Oil

Service Interval: Every 400 hours (check if you notice external leakage).

Every 400 hours

Use high quality SAE 85W-140 gear lube as a replacement.

1. With machine on level surface, position the wheel so 1 check plug is at the 12 o'clock position and the other is at 3 o'clock position (Figure 82).

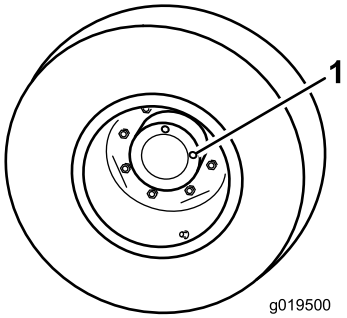

g019500

Figure 82

1. Check/drain plug (2)

2. Remove the plug at the 3 o’clock position (Figure 82).

   Note: The oil level should be at the bottom of the check-plug hole.

3. If the oil level is low, remove the plug at the 12 o’clock position and add oil until it begins to flow out of the hole at the 3 o’clock position.
4. Install both plugs.

Changing the Planetary-Gear-Drive Oil

Service Interval: After the first 200 hours

Every 800 hours/Yearly (whichever comes first)

1. With the machine on a level surface, position a wheel so a check plug is at the lowest (6 o'clock) position (Figure 83).

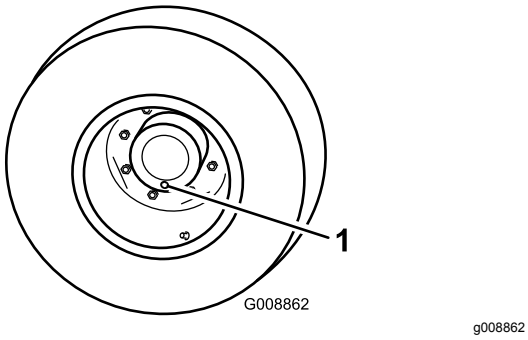

g008862

Figure 83

1. Check/drain plug

2. Place a drain pan under the planetary hub, remove the plug, and allow the oil to drain.
3. Place a drain pan under the brake housing, remove the drain plug, and allow the oil to drain (Figure 84).

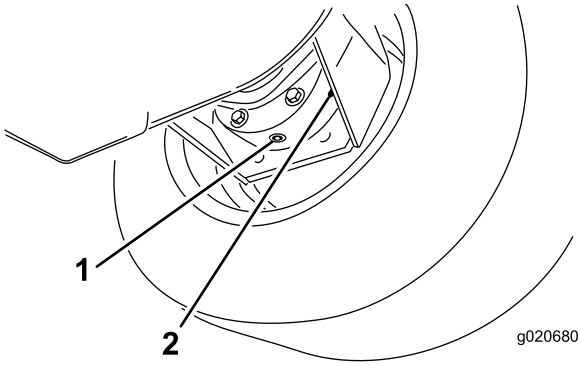

g020680

Figure 84

1. Drain plug
2. Brake housing

4. When all of the oil has drained from both locations, install the plug in the brake housing.
5. Rotate the wheel until the open plug hole in the planetary is at the 12 o'clock position.
6. Through the open hole, slowly fill the planetary with 0.65 L (22 oz) of high quality SAE 85W-140 wt gear lube.

   Important: **If the planetary fills before the 0.65 L (22 oz) of oil is added, wait 1 hour or install the plug and move the machine approximately 10 feet to distribute the oil through the brake system. Then, remove the plug and add the remaining oil.**

7. Install the plug.
8. Repeat the procedure on the opposite planetary/brake assembly.

Checking the Rear-Axle-Gearbox Lubricant

Service Interval: Every 400 hours

The gearbox is filled with SAE 85W-140 gear lube. The capacity is 0.5 L (16 oz). Visually inspect for leaks daily.

1. Position the machine on a level surface.
2. Remove the check/fill plug from the left side of the gearbox and ensure that lubricant is up to the bottom of the hole (Figure 85).

   Note: If the level is low, add enough lubricant to bring the level up to the bottom of the hole.

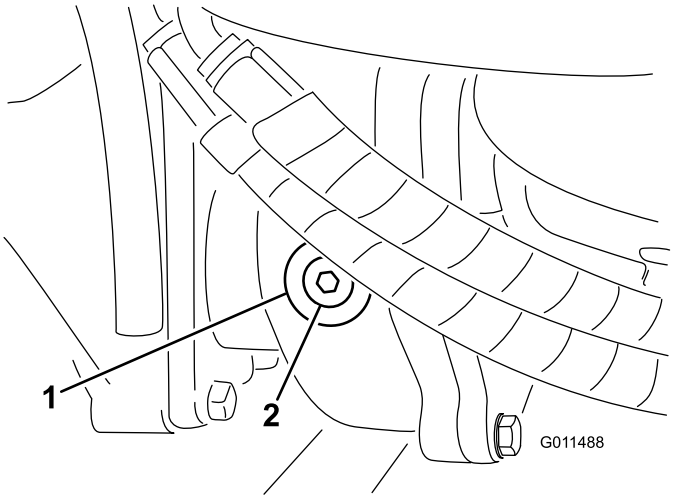

g011488

Figure 85

1. Gearbox
2. Check/fill plug

Changing the Rear-Axle Lubricant

Service Interval: After the first 200 hours

Every 800 hours

Change the lubricant initially after the first 200 hours of operation and every 800 hours of operation thereafter.

1. Position the machine on a level surface.
2. Clean the area around the 3 drain plugs; 1 on each end and 1 in the center (Figure 86).
3. Remove the check plugs to ease in the draining of the oil.
4. Remove the drain plugs and allow the oil to drain into the pans.

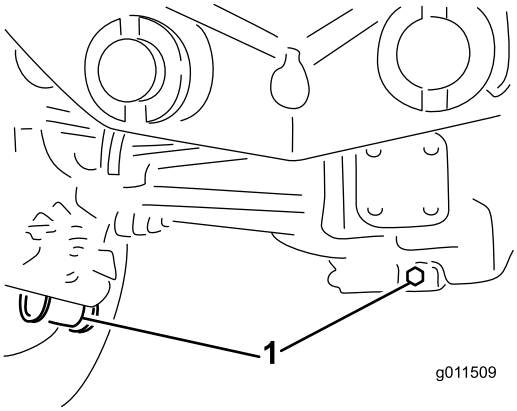

g011509

Figure 86

1. Drain-plug location

5. Clean the area around the drain plug at the bottom of the gearbox (Figure 87).
6. Remove the drain plug from the gearbox and allow the oil to drain into a pan.

   Note: Remove the fill plug to ease in the draining of the oil.

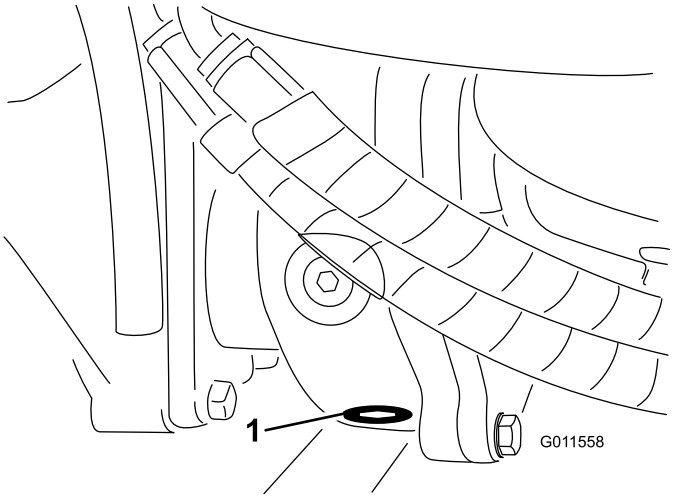

g011558

Figure 87

1. Drain plug

7. Add enough oil to bring the level up to the bottom of the check plug holes; refer to Changing the Rear-Axle Lubricant (page 61), and Checking the Rear-Axle-Gearbox Lubricant (page 60).
8. Install the plugs.

Checking the Rear Wheel Toe-In

Service Interval: Every 800 hours

1. Measure the center-to-center distance (at axle height) at the front and rear of the steering tires.

   Note: The front measurement must be 6 mm (1/4 inch) less than the rear measurement.
2. To adjust, loosen the clamps at both ends of the tie rods.
3. Rotate the tie-rod end to move the front of the tire inward or outward.
4. Tighten the tie-rod clamps when the adjustment is correct.

Changing the Front Tires

1. Lower the wing mower decks to the ground.
2. Raise the front of the machine several inches off the ground and support it with jackstands.
3. Refer to Pivoting (Tilting) the Center Mower Deck to the Upright Position (page 69).
4. Pivot the mower deck forward so you can remove the tire.

Adjusting the Traction-Pedal Angle

1. Loosen the 2 nuts and bolts securing the left side of the traction pedal to the bracket (Figure 88).

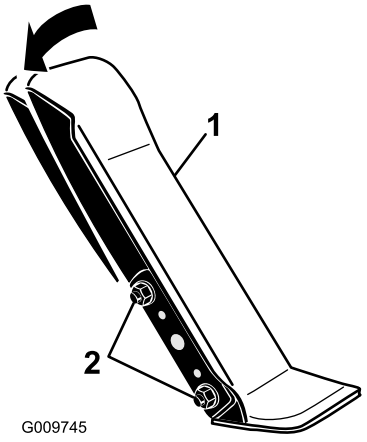

g009745

Figure 88

1. Traction pedal
2. Mounting nuts and bolts

2. Pivot the pedal to the desired operating angle and tighten the nuts (Figure 88).

Cooling System Maintenance

Cooling System Safety

⚠ CAUTION

Discharge of hot, pressurized coolant or touching a hot radiator and surrounding parts can cause severe burns.

- **Do not remove the radiator cap when the engine is hot. Always allow the engine to cool at least 15 minutes or until the radiator cap is cool enough to touch without burning your hand before removing the radiator cap.**
- **Do not touch the radiator and surrounding parts that are hot.**

⚠ DANGER

Swallowing engine coolant can cause poisoning.

- **Do not swallow engine coolant.**
- **Keep out of reach from children and pets.**

Checking the Cooling System

Service Interval: Before each use or daily

Check the coolant level at the beginning of each day. The capacity of the system is 8.5 L (9 US qt).

1. Carefully remove the radiator cap and expansion-tank cap (Figure 89).
2. Check the coolant level in the radiator.

   Note: The radiator should be filled to the top of the filler neck and the expansion tank filled to the Full mark.

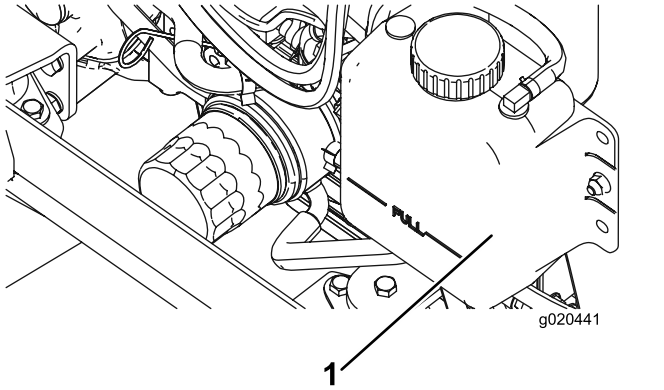

Figure 89

1. Expansion tank

3. If the coolant is low, add a 50/50 mixture of water and ethylene glycol anti-freeze.

   Important: **Do not use water only or alcohol/methanol base coolants, as this may cause damage.**

4. Install the radiator cap and expansion-tank cap.

Servicing the Engine-Cooling System

Service Interval: Every 100 hours

Every 2 years

This machine is equipped with a hydraulically driven fan-drive system that automatically (or manually) reverses to reduce the radiator/oil cooler and screen debris buildup. While this feature can help reduce the time required to clean radiator/oil cooler, it does not eliminate the need for routine cleaning. Periodic cleaning and inspection of the radiator/oil cooler is still required.

1. Shut off the engine and raise the hood.
2. Clean the engine area thoroughly of all debris.
3. Clean both sides of the radiator/oil cooler area thoroughly with compressed air (Figure 90).

   Note: Start from the fan side and blow the debris out toward the back. Then, clean from the back side and blow toward the front. Repeat this procedure several times until all chaff and debris is removed.

   Important: **Cleaning the radiator/oil cooler with water can promote premature corrosion and damage to components.**

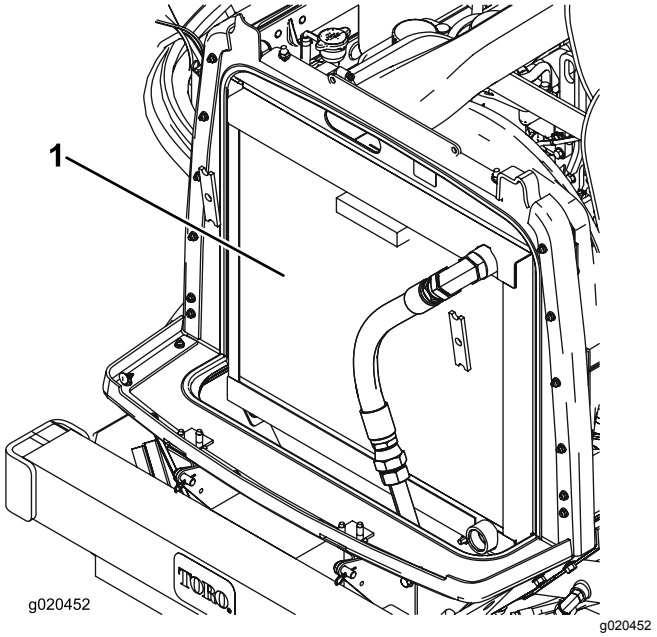

Figure 90

1. Radiator/oil cooler

4. Close the hood.

Brake Maintenance

Adjusting the Service Brakes

Adjust the service brakes when there is more than 25 mm (1 inch) of “free travel” of the brake pedal, or when the brakes do not work effectively. Free travel is the distance the brake pedal moves before you feel braking resistance.

1. Disengage the locking latch from the brake pedals so that both pedals work independently of each other.
2. To reduce free travel of the brake pedals, tighten the brakes as follows:
   A. Loosen the 2 mounting screws and remove the brake-adjustment cover (Figure 91).

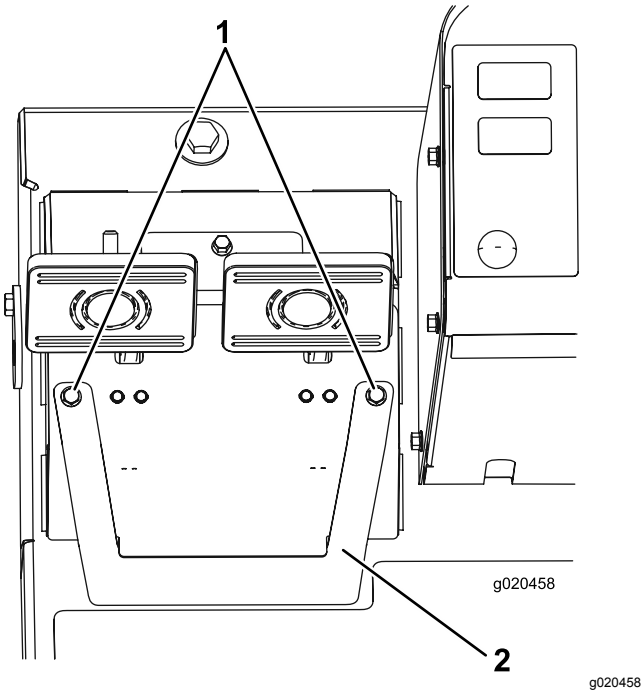

Figure 91

1. Mounting screws
2. Brake-adjustment cover

   B. Loosen the front nut on the threaded end of the brake cable (Figure 92).

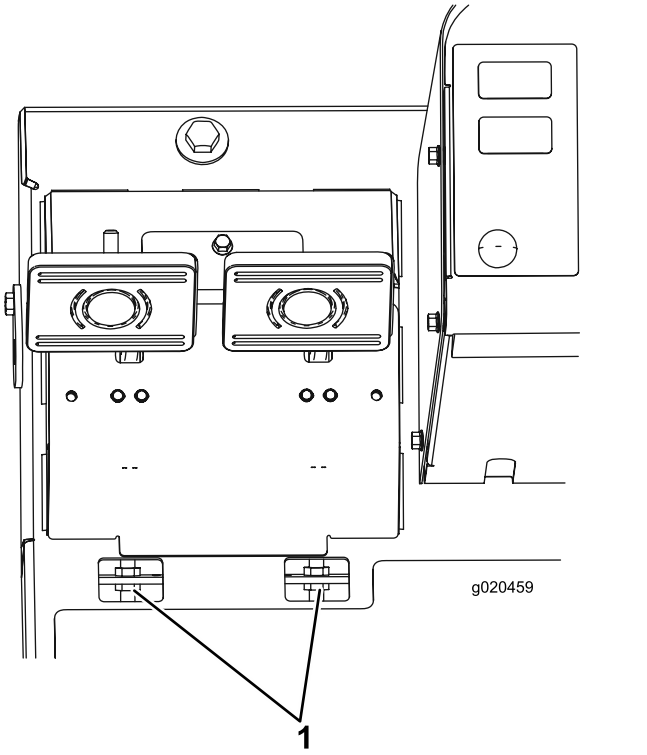

Figure 92

1. Brake-cable-adjusting nuts

   C. Tighten the rear nut to move the cable backward until the brake pedals have 13 to 25 mm (1/2 to 1 inch) of free travel.
   D. Tighten the front nuts after the brakes are adjusted correctly.
   E. Install the brake-adjustment cover.

Belt Maintenance

Servicing the Alternator Belt

Service Interval: After the first 10 hours

Every 100 hours

Proper tension allows 10 mm (3/8 inch) of deflection when a force of 44 N·m (10 ft-lb) is applied on the belt midway between the pulleys.

If the deflection is not 10 mm (3/8 inch), loosen the alternator-mounting bolts (Figure 93).

Note: Increase or decrease the alternator-belt tension and tighten the bolts. Check the deflection of the belt again to ensure that the tension is correct.

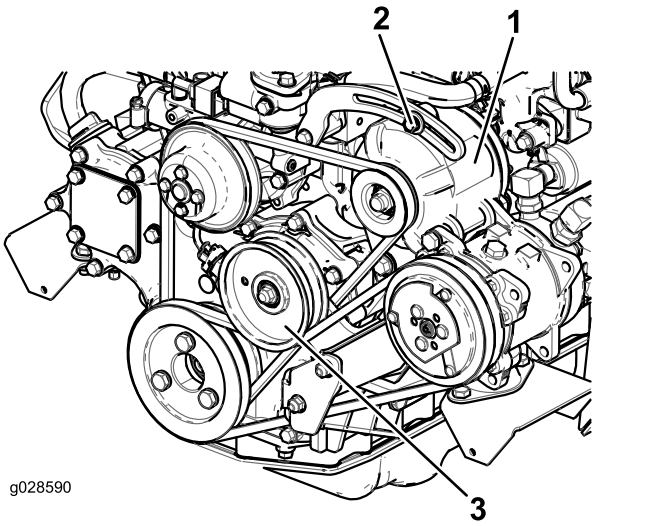

Figure 93

1. Alternator
2. Mounting bolt
3. Compressor
4. Idler pulley

Tensioning the Blade-Drive Belts

Service Interval: After the first 10 hours

Every 50 hours

When properly tensioned, the inside measurement of the extension spring (hook to hook) should be approximately 8.3 to 9.5 cm (3-1/4 to 3-3/4 inches). Once the correct spring tension is attained, adjust the stop bolt (carriage bolt) until there is approximately 2 to 5 mm (0.065 to 0.185 inch) clearance between the head of the bolt and the idler arm (Figure 94).

Note: Ensure that the belt is positioned on the spring side of the belt guide (Figure 94).

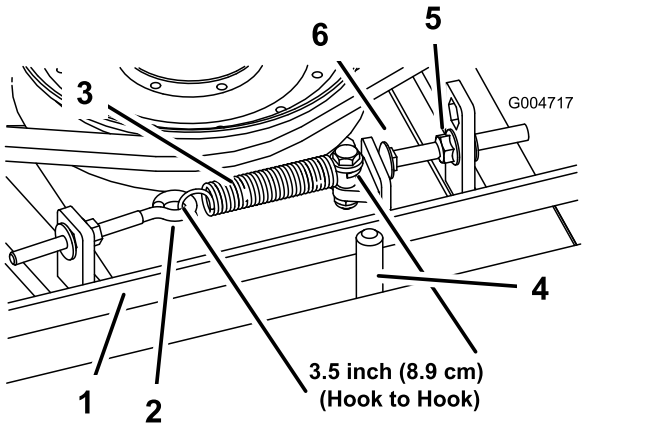

Figure 94

1. Belt
2. Eye bolt
3. Extension spring
4. Belt guide
5. Flange nut
6. Stop bolt

Replacing the Blade-Drive Belt

Service Interval: Every 800 hours

The blade-drive belt, tensioned by the spring-loaded idler pulley, is very durable. However, after many hours of use, the belt will show signs of wear. Signs of a worn belt are: squealing when the belt is rotating, blades slipping when cutting grass, frayed edges, burn marks, and cracks. Replace the belt if any of these conditions are evident.

1. Lower the mower deck to the shop floor, remove the belt covers from the top of the mower deck, and set the covers aside.
2. Loosen the eye bolt allowing the removal of the extension spring (Figure 94).
3. Loosen the flange nut securing the stop bolt to the mounting tab and move the idler pulley away from the belt to release the belt tension (Figure 94).

   Note: Loosen the nut enough to allow the idler arm to pass the stop bolt.

   Note: If the stop bolt is ever removed from the mounting tab, make sure that it is installed again in the hole that aligns the stop-bolt head with the idler arm.
4. Remove the bolts securing the hydraulic motor to the mower deck (Figure 95).

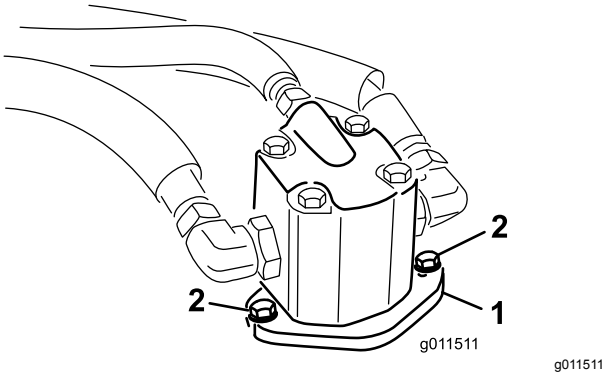

g011511

Figure 95

1. Hydraulic motor
2. Mounting bolts

5. Lift the motor off the mower deck and lay it on top of the mower deck.
6. Remove the old belt from around the spindle pulleys and idler pulley.
7. Route the new belt around the spindle pulleys and idler-pulley assembly.
8. Position the hydraulic motor on the mower deck after routing the belt around the pulleys. Mount the motor to the mower deck with the bolts previously removed.

   Note: Ensure that the belt is positioned on the spring side of the belt guide (Figure 94).
9. Connect the extension spring (Figure 94) to the eye bolt and tension the belt as follows:
   - When properly tensioned, the inside measurement of the extension spring (hook to hook) should be approximately 8.3 to 9.5 cm (3-1/4 to 3-3/4 inch).
   - When you attain the correct spring tension, adjust the stop bolt (carriage bolt) until there is approximately 2 to 5 mm (0.065 to 0.185 inches) clearance between the head of the bolt and the idler arm.

Hydraulic System Maintenance

Hydraulic System Safety

⚠ WARNING

Hydraulic fluid escaping under pressure can penetrate skin and cause injury.

- **Ensure that all hydraulic-fluid hoses and lines are in good condition and all hydraulic connections and fittings are tight before applying pressure to the hydraulic system.**
- **Keep your body and hands away from pinhole leaks or nozzles that eject high-pressure hydraulic fluid.**
- **Use cardboard or paper to find hydraulic leaks.**
- **Safely relieve all pressure in the hydraulic system before performing any work on the hydraulic system.**
- **Seek immediate medical attention if fluid is injected into skin.**

Checking the Hydraulic Fluid

Service Interval: Before each use or daily

The reservoir is filled at the factory with approximately 29 L (7.75 US gallons) of high-quality hydraulic fluid. Check the level of the hydraulic fluid before the engine is first started and daily thereafter. The recommended replacement fluid is as follows:

Toro Premium All Season Hydraulic Fluid
(Available in 19 L (5 US gallons) pails or 208 L (55 US gallons) drums. See the *Parts Catalog* or your Toro Distributor for part numbers).

Alternative fluids: If the Toro fluid is not available, other **conventional, petroleum-based** fluids may be used, provided they meet all of the following material properties and industry specifications. Check with your oil supplier to see whether the oil meets these specifications.

Note: Toro does not assume responsibility for damage caused by improper substitutions, so use only products from reputable manufacturers who will stand behind their recommendation.

High Viscosity Index/Low Pour Point Anti-wear Hydraulic Fluid, ISO VG 46

Material Properties:	
Viscosity, ASTM D445	St @ 40° C 44 to 50
	St @ 100° C 7.9 to 8.5
Viscosity Index ASTM D2270	140 to 160
Pour Point, ASTM D97	-34° F to -49° F
Industry Specifications:	Vickers I-286-S (Quality Level), Vickers M-2950-S (Quality Level), Denison HF-0

The proper hydraulic fluids must be specified for mobile machinery (as opposed to industrial plant usage), multi-weight type, with ZnDTP or ZDDP anti-wear additive package (not an ashless-type fluid).

Toro Synthetic Biodegradable Hydraulic Fluid (Available in 19 L (5 US gallon) pails or 208 L (55 US gallon) drums. See the *Parts Catalog* or your Toro Distributor for part numbers)

This high quality synthetic, biodegradable fluid has been tested and found compatible for this Toro model. Other brands of synthetic fluid may have seal compatibility problems and Toro cannot assume responsibility for unauthorized substitutions.

Important: **This synthetic fluid is not compatible with the Toro Biodegradable Fluid previously sold. See your Toro Distributor for more information.**

Alternative biodegradable fluids:

Mobil EAL Envirosyn H 46 (US)

Mobil EAL Hydraulic Oil 46 (International)

Important: **Many hydraulic fluids are almost colorless, making it difficult to spot leaks. A red dye additive for the hydraulic system oil is available in 20 ml (2/3 fl oz) bottles. 1 bottle is sufficient for 15 to 22 L (4 to 6 US gallons) of hydraulic oil. Order Part No. 44-2500 from your Toro Distributor.**

1. Position the machine on a level surface, lower the mower decks, shut off the engine, and remove the key from the ignition.
2. Check the hydraulic-fluid level (Figure 96).

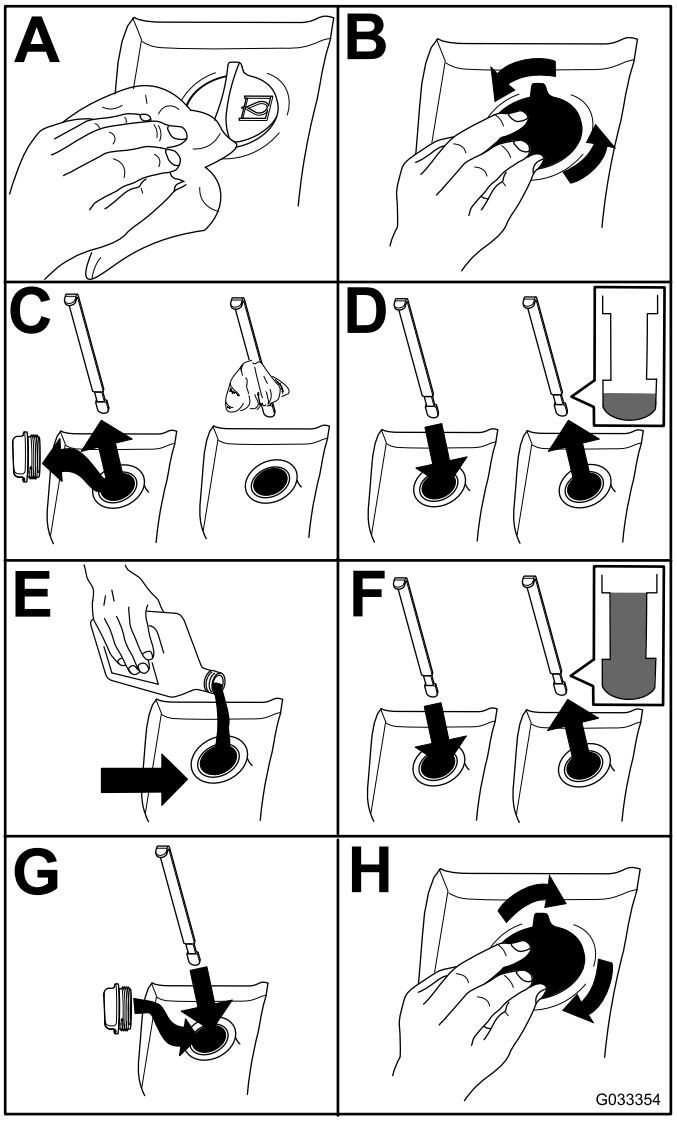

g033354

Figure 96

Changing the Hydraulic Fluid

Service Interval: Every 800 hours

Change the hydraulic fluid after every 800 operating hours, in normal conditions. If the fluid becomes contaminated, contact your local Toro distributor because the system must be flushed. Contaminated fluid looks milky or black when compared to clean oil.

1. Position the machine on a level surface, lower the mower decks, shut off the engine, and remove the key.
2. Remove the drain plug from the bottom, front of the reservoir and let the hydraulic fluid flow into a large drain pan.
3. Install and tighten the plug when the hydraulic fluid stops draining.
4. Fill the reservoir (Figure 97) with hydraulic fluid; refer to Checking the Hydraulic Fluid (page 66).

   Important: **Use only the hydraulic fluids specified. Other fluids could cause system damage.**

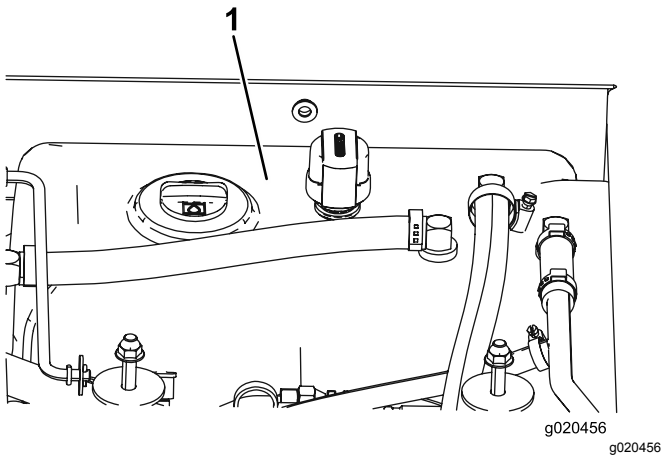

Figure 97

1. Hydraulic reservoir

5. Install the reservoir cap, start the engine, and use all of the hydraulic controls to distribute hydraulic fluid throughout the system.
6. Check for leaks; then shut off the engine.
7. Check the fluid level and add enough to raise level the level to the Full mark on the dipstick.

   Note: Do not overfill.

Replacing the Hydraulic Filters

Service Interval: After the first 200 hours
Every 800 hours

Use Toro replacement filters Part No. 94-2621 for the rear (mower deck) of the machine and Part No. 75-1310 for the front (charge) of the machine.

Important: **Use of any other filter may void the warranty on some components.**

1. Position the machine on a level surface, lower the mower decks, shut off the engine, engage the parking brakes, and remove the ignition key.
2. Replace the hydraulic filters (Figure 98).

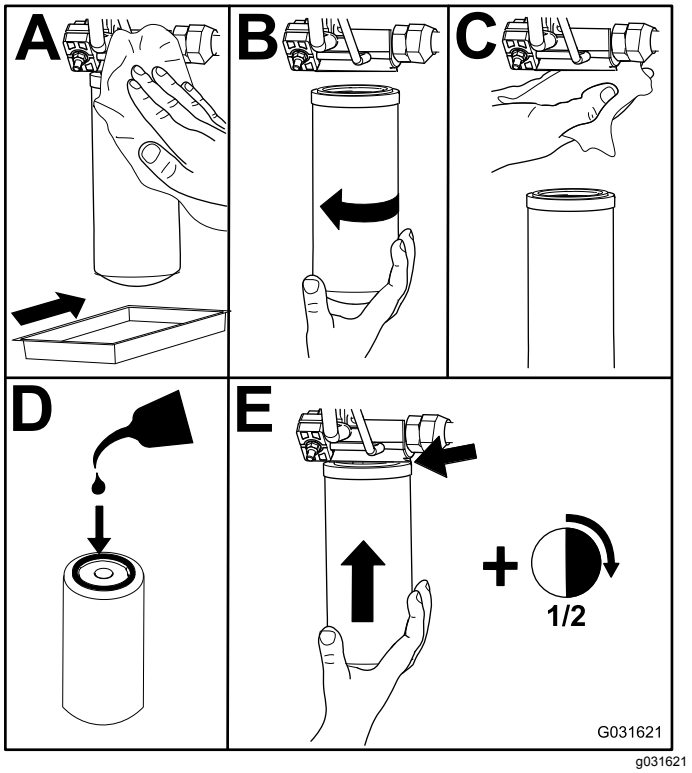

Figure 98

3. Start the engine and let it run for about 2 minutes to purge air from the system and shut off the engine and check for leaks.

Checking the Hydraulic Lines and Hoses

Service Interval: Every 2 years

Inspect the hydraulic lines and hoses daily for leaks, kinked lines, loose mounting supports, wear, loose fittings, weather deterioration, and chemical deterioration. Make all necessary repairs before operating the machine.

Adjusting the Counterbalance Pressure

The counterbalance test port is used to test the pressure in the counterbalance circuit (Figure 99). The recommended counterbalance pressure is 2,241 kPa (325 psi). To adjust the counterbalance pressure, loosen the locknut, rotate the adjusting screw (Figure 99) clockwise to increase the pressure, or counterclockwise to decrease the pressure and tighten the locknut. The engine must be running, the deck lowered and in the float position to check the pressure.

Note: The caster wheels of all 3 mower decks should remain on the ground when adjusting the counterbalance and with counterbalance applied.

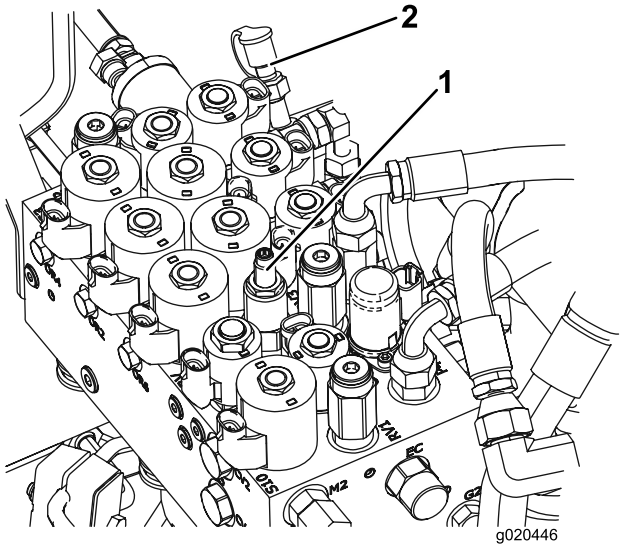

Figure 99

1. Counterbalance-adjusting screw
2. Counterbalance-test port

Mower Maintenance

Pivoting (Tilting) the Center Mower Deck to the Upright Position

Note: Although not needed for normal maintenance procedures, the center mower deck can be pivoted (tilted) to an upright position. Should you desire to tilt the mower deck, proceed as follows:

1. Raise the center mower deck slightly off the floor, set the parking brake, and shut off the engine, and remove the ignition key.
2. Remove the hairpin cotter securing the dampers to lift arms (Figure 100).

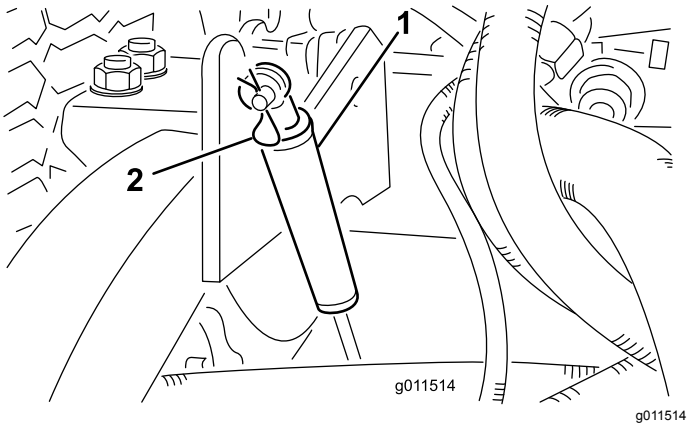

Figure 100

1. Damper
2. Hairpin cotter

3. Pivot the damper toward the deck housing.
4. Remove the hairpin cotter and clevis pin securing the height-of-cut chains to the rear of the mower deck (Figure 101).

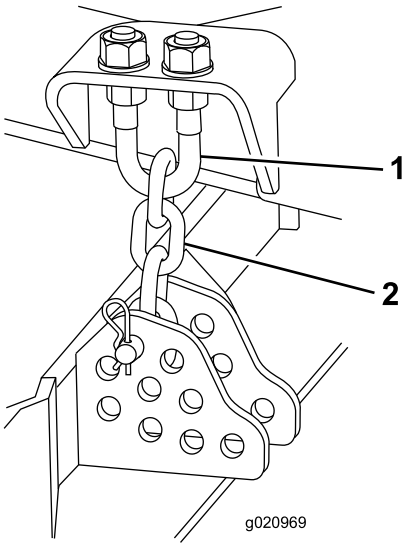

g020969

Figure 101

1. U-bolt
2. Height-of-cut chain

5. Start the engine and slowly raise the center mower deck.
6. Slowly raise each side cutting until the center of gravity shifts and the deck starts to rotate into the upright position.
7. Shut off the engine and remove the ignition key.

Pivoting the Center Mower Deck Down

1. Slowly lower the wing mower decks until the center of gravity shifts and the center mower deck rotates downward.
2. Sit on the seat, start the engine, and lower the center mower deck until it is slightly off the floor.
3. Secure the height-of-cut chains to the rear of the mower deck.
4. Pivot the dampers upward into position and secure with a clevis pin and cotter pin.

Adjusting the Mower-Deck Pitch

Measuring the Mower-Deck Pitch

Mower-deck pitch is the difference in height of cut from the front of the blade plane to the back of the blade plane. Use s a blade pitch of 8 to 11 mm (5/16 to 7/16 inch). That is the back of the blade plane is 8 to 11 mm (5/16 to 7/16 inch) higher than the front.

1. Position the machine on a level surface on the shop floor.
2. Set the mower deck to the desired height of cut.
3. Rotate a blade to point straight forward.
4. Using a short ruler, measure from the floor to the front tip of the blade.
5. Rotate the blade tip to the rear and measure from the floor to the tip of the blade.
6. Subtract the front dimension from the rear dimension to calculate the blade pitch.

Adjusting the Center Mower-Deck Pitch

1. Loosen the jam nuts on the top or bottom of the height-of-cut-chain U-bolt (Figure 102).
2. Adjust the other set of nuts to raise or lower the rear of the mower deck and attain the correct mower-deck pitch.
3. Tighten the jam nuts.

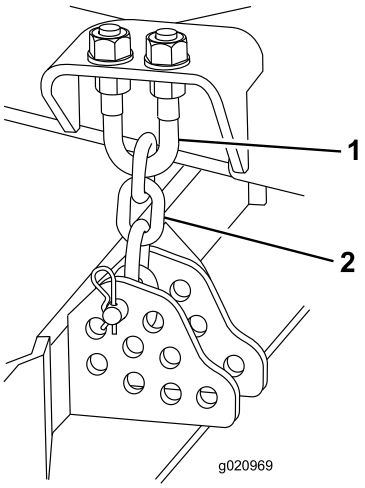

g020969

Figure 102

1. U-bolt
2. Height-of-cut chain

Adjusting the Wing Mower Decks

1. Remove the cap screws and nuts securing the castor arm to the castor fork (Figure 103).
2. Position the shims, as required, to raise or lower the castor wheel until the mower deck has the correct pitch.
3. Install the cap screws and nuts.

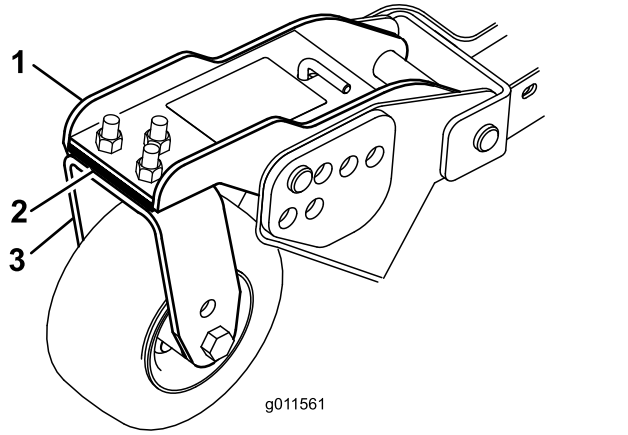

Figure 103

1. Castor arm
2. Shims
3. Castor fork

Servicing the Caster-Arm Bushings

The caster arms have bushings pressed into the top and bottom of the tube and after many hours of operation, the bushings develop wear. To check the bushings, move the caster fork back and forth and from side to side. If the caster spindle is loose inside the bushings, the bushings are worn and must be replaced.

1. Raise the mower deck so the wheels are off the floor and block the mower deck so it cannot fall.
2. Remove the tensioning cap, spacer(s), and thrust washer from the top of the caster spindle.
3. Pull the caster spindle out of the mounting tube.

   Note: Keep the thrust washer and spacer(s) on the bottom of the spindle.
4. Insert a pin punch into the top or bottom of the mounting tube and drive the bushing out of the tube (Figure 104).

   Note: Also drive the other bushing out of the tube. Clean the inside of the tubes to remove dirt.

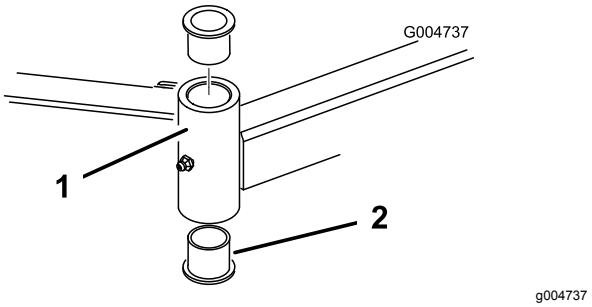

Figure 104

1. Caster-arm tube
2. Bushings

5. Apply grease to the inside and outside of the new bushings.
6. Using a hammer and flat plate, drive the bushings into the mounting tube.
7. Inspect the caster spindle for wear and replace it if it is damaged.
8. Push the caster spindle through the bushings and mounting tube.
9. Slide the thrust washer and spacer(s) onto the spindle and install the tensioning cap on the caster spindle to retain all parts in place.

Servicing the Caster Wheels and Bearings

Service Interval: Every 800 hours

1. Remove the locknut from the bolt holding the caster-wheel assembly between the caster fork (Figure 105) or the caster-pivot arm (Figure 106).

   Note: Grasp the caster wheel and slide the bolt out of the fork or pivot arm.

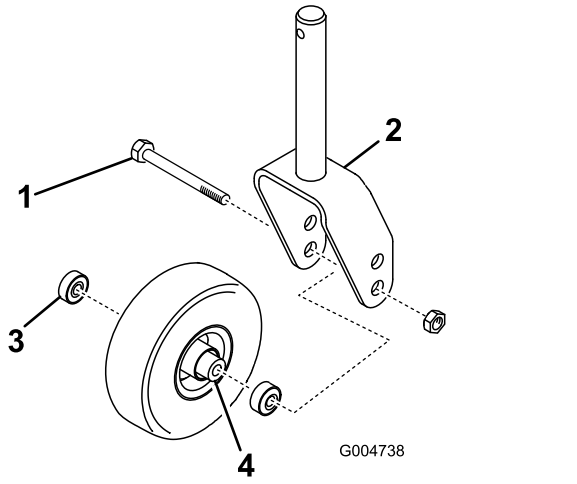

g004738

Figure 105

1. Caster bolt
2. Caster fork
3. Bearing
4. Bearing spacer

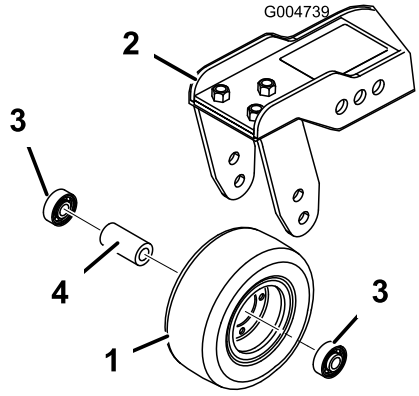

g004739

Figure 106

1. Caster wheel
2. Caster-pivot arm
3. Bearing
4. Bearing spacer

2. Remove the bearing from the wheel hub and allow the bearing spacer to fall out (Figure 105 and Figure 106).
3. Remove the bearing from the opposite side of the wheel hub.
4. Check the bearings, spacer, and inside of the wheel hub for wear and replace any damaged parts.
5. To assemble the caster wheel, push the bearing into the wheel hub.

   Note: When installing the bearings, press on the outer face of the bearing.
6. Slide the bearing spacer into the wheel hub and push the other bearing into the open end of the wheel hub to captivate the bearing spacer inside the wheel hub.
7. Install the caster-wheel assembly between the caster fork and secure it in place with the bolt and locknut.

Replacing the Mower-Deck-Hinge Covers

The hinge cover prevents debris from escaping at hinge points between mower decks. If cover(s) ever become damaged or worn they must be replaced.

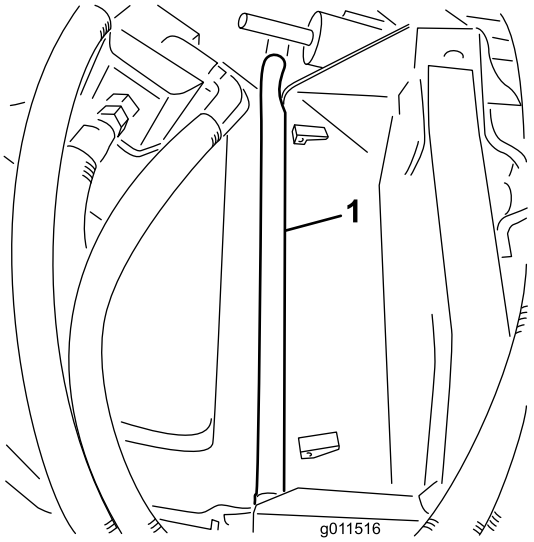

g011516

Figure 107

Blade Maintenance

Blade Safety

⚠ DANGER

A worn or damaged blade can break, and a piece of the blade could be thrown at you or bystanders, resulting in serious personal injury or death. Trying to repair a damaged blade may result in discontinued safety certification of the product.

- **Inspect the blade periodically for wear or damage.**
- **Never try to straighten a blade that is bent or weld a broken or cracked blade.**
- **Replace a worn or damaged blade.**
- Use care when checking the blades. Wrap the blades or wear gloves, and use caution when servicing the blades. Only replace the blades; never straighten or weld them.
- On multi-bladed machines, take care as rotating 1 blade can cause other blades to rotate.

Checking for a Bent Blade

After striking a foreign object, inspect the machine for damage and make repairs before starting and operating the equipment. Torque all of the spindle-pulley nuts to 176 to 203 N·m (130 to 150 ft-lb).

1. Position the machine on a level surface, raise the mower deck, engage the parking brake, put the traction pedal in NEUTRAL, put the PTO lever in the OFF position, shut off the engine, and remove the ignition key.

   Note: Block the mower deck to prevent it from accidentally falling.

2. Rotate the blade until the ends face forward and backward and measure from the inside of the mower deck to the cutting edge at the front of the blade (Figure 108).

   Note: Remember this dimension.

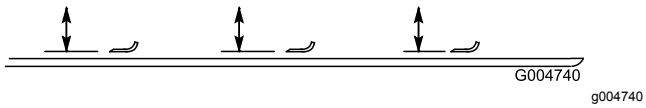

Figure 108

3. Rotate the opposite end of the blade forward and measure between the mower deck and cutting edge of the blade at the same position as in step 2.

   Note: The difference between the dimensions obtained in steps 2 and 3 must not exceed 3 mm (1/8 inch). If the dimension exceeds 3 mm (1/8 inch), the blade is bent and must be replaced; refer to Removing and Installing the Mower Blade(s) (page 73).

Removing and Installing the Mower Blade(s)

The blade must be replaced if a solid object is hit, the blade is out of balance, or if the blade is bent. Always use genuine Toro replacement blades to ensure safety and optimum performance.

1. Raise the mower deck to the highest position, engage the parking brake, shut off the engine, and remove the ignition key.

   Note: Block the mower deck to prevent it from accidentally falling.

2. Grasp the end of the blade using a rag or thickly-padded glove.
3. Remove the blade bolt, anti-scalp cup, and blade from the spindle shaft (Figure 109).

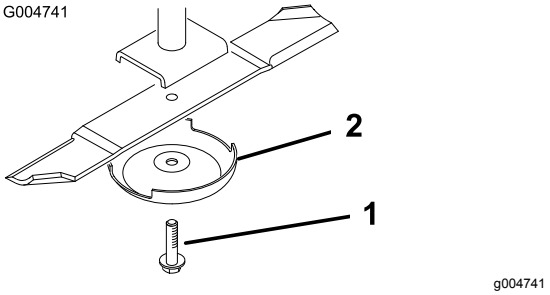

Figure 109

1. Blade bolt
2. Anti-scalp cup

4. Install the blade, anti-scalp cup, and blade bolt and tighten the blade bolt to 115 to 149 N·m (85 to 110 ft-lb).

   Important: **The curved part of the blade must be pointing toward the inside of the mower deck to ensure proper cutting.**

   Note: After striking a foreign object, torque all of the spindle-pulley nuts to 115 to 149 N·m (85 to 110 ft-lb).

Inspecting and Sharpening the Mower Blade(s)

Consider 2 areas when checking and servicing the mower blade—the sail and the cutting edge. Both cutting edges and the sail, which is the turned-up portion opposite of the cutting edge, contribute to a good quality of cut. The sail is important because it lifts the grass up straight, thereby producing an even cut. However, the sail gradually wears down during operation. As the sail wears down, the quality of cut degrades somewhat, although the cutting edges are sharp. The cutting edge of the blade must be sharp so that the grass is cut rather than torn. A dull cutting edge is evident when the tips of the grass appear brown and shredded. Sharpen the cutting edges to correct this condition.

1. Position the machine on a level surface, raise the mower deck, engage the parking brake, put the traction pedal in NEUTRAL, put the PTO lever in the OFF position, shut off the engine, and remove the ignition key.
2. Examine the cutting ends of the blade carefully, especially where the flat and curved parts of the blade meet (Figure 110).

   Note: Because sand and abrasive material can wear away the metal that connects the flat and curved parts of the blade, check the blade before using the mower. If wear is noticed (Figure 110), replace the blade.

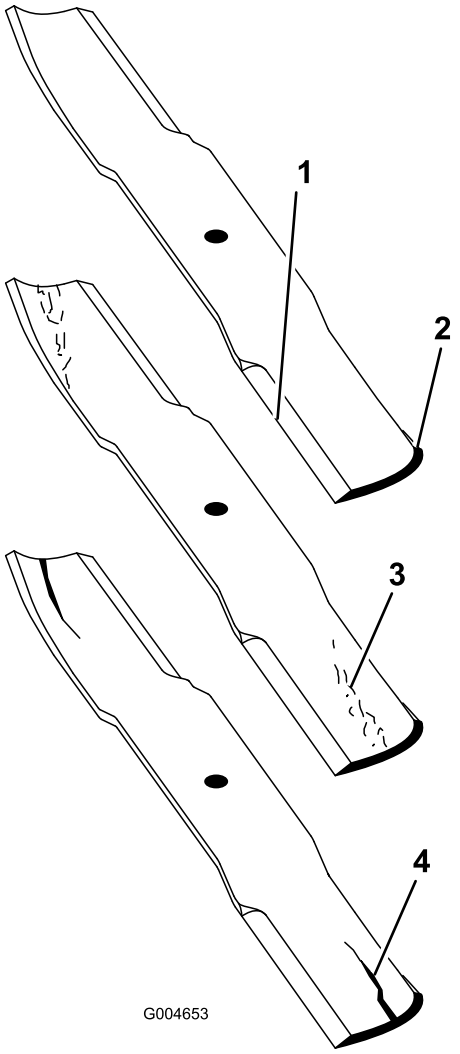

g004653

Figure 110

1. Cutting edge
2. Curved area
3. Wear/slot forming
4. Crack

3. Examine the cutting edges of all of the blades and sharpen the cutting edges if they are dull or nicked (Figure 111).

   Note: Sharpen only the top of the cutting edge and maintain the original cutting angle to ensure sharpness (Figure 111). The blade will remain balanced if the same amount of metal is removed from both cutting edges.

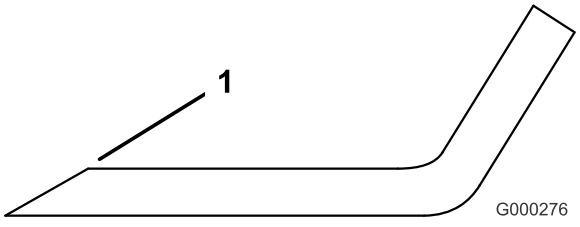

g000276

Figure 111

1. Sharpen at the original angle.

Note: Remove the blades and sharpen them on a grinder. After sharpening the cutting edges, install the blade with the anti-scalp cup and blade bolt; refer to Removing and Installing the Mower Blade(s) (page 73).

Correcting a Mower-Deck Mismatch

If there is mismatch between the blades, on a single mower deck, the grass will appear streaked when it is cut. This problem can be corrected by ensuring that the blades are straight and all of the blades are cutting on the same plane.

1. Park the machine on a level surface of the shop floor.
2. Raise the height of cut to the highest position; refer to Adjusting the Height of Cut (page 26).
3. Lower the mower deck onto the flat surface and remove the covers from the top of the mower deck.
4. Loosen the flange nut securing the idler pulley to release the belt tension.
5. Rotate the blades until the ends face forward and backward and measure from the floor to the front tip of the cutting edge.

   Note: Remember this dimension. Then rotate the same blade so that the opposite end is forward, and measure again. The difference between the dimensions must not exceed 3 mm (1/8 inch). If the dimension exceeds 3 mm (1/8 inch), replace the blade because it is bent. Make sure to measure all of the blades.
6. Compare the measurements of the outer blades with the center blade.

   Note: The center blade must not be more than 10 mm (3/8 inch) lower than the outer blades. If the center blade is more than 10 mm (3/8 inch) lower than the outer blades, proceed to step 7 and add shims between the spindle housing and the bottom of the mower deck.
7. Remove the bolts, flat washers, lock washers, and nuts from the outer spindle in the area where the shims must be added.

   Note: To raise or lower the blade, add a shim, Part No. 3256-24, between the spindle housing and the bottom of the mower deck. Continue to check the alignment of the blades and add shims until the tips of the blades are within the required dimension.

   Important: **Do not use more than 3 shims at any 1 hole location. Use decreasing numbers of shims in adjacent holes if more than 1 shim is added to any 1 hole location.**
8. Adjust the idler pulley and install the belt covers.

Storage

Preparing for Seasonal Storage

Traction Unit

1. Thoroughly clean the traction unit, mower decks, and the engine.
2. Check the tire pressure; refer to Checking the Tire Pressure (page 24).
3. Check all fasteners for looseness; tighten as necessary.
4. Grease or oil all grease fittings and pivot points. Wipe up any excess lubricant.
5. Lightly sand and use touch-up paint on painted areas that are scratched, chipped, or rusted. Repair any dents in the metal body.
6. Service the battery and cables as follows:
   A. Remove the battery terminals from the battery posts.
   B. Clean the battery, terminals, and posts with a wire brush and baking soda solution.
   C. Coat the cable terminals and battery posts with Grafo 112X skin-over grease (Toro Part No. 505-47) or petroleum jelly to prevent corrosion.
   D. Slowly recharge the battery every 60 days for 24 hours to prevent lead sulfation of the battery.

Engine

1. Drain the engine oil from the oil pan and install the drain plug.
2. Remove and discard the oil filter. Install a new oil filter.
3. Fill the oil pan with motor oil.
4. Start the engine and run it at idle speed for approximately 2 minutes.
5. Shut off the engine.
6. Flush the fuel tank with fresh, clean diesel fuel.
7. Secure all of the fuel system fittings.
8. Thoroughly clean and service the air-cleaner assembly.
9. Seal the air cleaner inlet and the exhaust outlet with weatherproof tape.
10. Check the anti freeze protection and add a 50/50 solution of water and ethylene glycol anti-freeze as needed for the expected minimum temperature in your area.

Notes:

Notes:

International Distributor List

Distributor:	Country:	Phone Number:	Distributor:	Country:	Phone Number:
Agrolanc Kft	Hungary	36 27 539 640	Maquiver S.A.	Colombia	57 1 236 4079
Asian American Industrial (AAI)	Hong Kong	852 2497 7804	Maruyama Mfg. Co. Inc.	Japan	81 3 3252 2285
B-Ray Corporation	Korea	82 32 551 2076	Mountfield a.s.	Czech Republic	420 255 704 220
Brisa Goods LLC	Mexico	1 210 495 2417	Mountfield a.s.	Slovakia	420 255 704 220
Casco Sales Company	Puerto Rico	787 788 8383	Munditol S.A.	Argentina	54 11 4 821 9999
Ceres S.A.	Costa Rica	506 239 1138	Norma Garden	Russia	7 495 411 61 20
CSSC Turf Equipment (pvt) Ltd.	Sri Lanka	94 11 2746100	Oslinger Turf Equipment SA	Ecuador	593 4 239 6970
Cyril Johnston & Co.	Northern Ireland	44 2890 813 121	Oy Hako Ground and Garden Ab	Finland	358 987 00733
Cyril Johnston & Co.	Republic of Ireland	44 2890 813 121	Parkland Products Ltd.	New Zealand	64 3 34 93760
Fat Dragon	China	886 10 80841322	Perfetto	Poland	48 61 8 208 416
Femco S.A.	Guatemala	502 442 3277	Pratoverde SRL.	Italy	39 049 9128 128
FIVEMANS New-Tech Co., Ltd	China	86-10-6381 6136	Prochaska & Cie	Austria	43 1 278 5100
ForGarder OU	Estonia	372 384 6060	RT Cohen 2004 Ltd.	Israel	972 986 17979
G.Y.K. Company Ltd.	Japan	81 726 325 861	Riversa	Spain	34 9 52 83 7500
Geomechaniki of Athens	Greece	30 10 935 0054	Lely Turfcare	Denmark	45 66 109 200
Golf international Turizm	Turkey	90 216 336 5993	Lely (U.K.) Limited	United Kingdom	44 1480 226 800
Hako Ground and Garden	Sweden	46 35 10 0000	Solvert S.A.S.	France	33 1 30 81 77 00
Hako Ground and Garden	Norway	47 22 90 7760	Spypros Stavrinides Limited	Cyprus	357 22 434131
Hayter Limited (U.K.)	United Kingdom	44 1279 723 444	Surge Systems India Limited	India	91 1 292299901
Hydroturf Int. Co Dubai	United Arab Emirates	97 14 347 9479	T-Markt Logistics Ltd.	Hungary	36 26 525 500
Hydroturf Egypt LLC	Egypt	202 519 4308	Toro Australia	Australia	61 3 9580 7355
Irrimac	Portugal	351 21 238 8260	Toro Europe NV	Belgium	32 14 562 960
Irrigation Products Int'l Pvt Ltd.	India	0091 44 2449 4387	Valtech	Morocco	212 5 3766 3636
Jean Heybroek b.v.	Netherlands	31 30 639 4611	Victus Emak	Poland	48 61 823 8369

European Privacy Notice

The Information Toro Collects
Toro Warranty Company (Toro) respects your privacy. In order to process your warranty claim and contact you in the event of a product recall, we ask you to share certain personal information with us, either directly or through your local Toro company or dealer.

The Toro warranty system is hosted on servers located within the United States where privacy law may not provide the same protection as applies in your country.

BY SHARING YOUR PERSONAL INFORMATION WITH US, YOU ARE CONSENTING TO THE PROCESSING OF YOUR PERSONAL INFORMATION AS DESCRIBED IN THIS PRIVACY NOTICE.

The Way Toro Uses Information
Toro may use your personal information to process warranty claims, to contact you in the event of a product recall and for any other purpose which we tell you about. Toro may share your information with Toro's affiliates, dealers or other business partners in connection with any of these activities. We will not sell your personal information to any other company. We reserve the right to disclose personal information in order to comply with applicable laws and with requests by the appropriate authorities, to operate our systems properly or for our own protection or that of other users.

Retention of your Personal Information
We will keep your personal information as long as we need it for the purposes for which it was originally collected or for other legitimate purposes (such as regulatory compliance), or as required by applicable law.

Toro's Commitment to Security of Your Personal Information
We take reasonable precautions in order to protect the security of your personal information. We also take steps to maintain the accuracy and current status of personal information.

Access and Correction of your Personal Information
If you would like to review or correct your personal information, please contact us by email at legal@toro.com.

Australian Consumer Law

Australian customers will find details relating to the Australian Consumer Law either inside the box or at your local Toro Dealer.

The Toro Warranty

A Two-Year Limited Warranty

Conditions and Products Covered

The Toro Company and its affiliate, Toro Warranty Company, pursuant to an agreement between them, jointly warrant your Toro Commercial product ("Product") to be free from defects in materials or workmanship for two years or 1500 operational hours*, whichever occurs first. This warranty is applicable to all products with the exception of Aerators (refer to separate warranty statements for these products). Where a warrantable condition exists, we will repair the Product at no cost to you including diagnostics, labor, parts, and transportation. This warranty begins on the date the Product is delivered to the original retail purchaser.
* Product equipped with an hour meter.

Instructions for Obtaining Warranty Service

You are responsible for notifying the Commercial Products Distributor or Authorized Commercial Products Dealer from whom you purchased the Product as soon as you believe a warrantable condition exists. If you need help locating a Commercial Products Distributor or Authorized Dealer, or if you have questions regarding your warranty rights or responsibilities, you may contact us at:

Toro Commercial Products Service Department
Toro Warranty Company
8111 Lyndale Avenue South
Bloomington, MN 55420-1196

952–888–8801 or 800–952–2740
E-mail: commercial.warranty@toro.com

Owner Responsibilities

As the Product owner, you are responsible for required maintenance and adjustments stated in your *Operator's Manual*. Failure to perform required maintenance and adjustments can be grounds for disallowing a warranty claim.

Items and Conditions Not Covered

Not all product failures or malfunctions that occur during the warranty period are defects in materials or workmanship. This warranty does not cover the following:

- Product failures which result from the use of non-Toro replacement parts, or from installation and use of add-on, or modified non-Toro branded accessories and products. A separate warranty may be provided by the manufacturer of these items.
- Product failures which result from failure to perform recommended maintenance and/or adjustments. Failure to properly maintain your Toro product per the Recommended Maintenance listed in the *Operator's Manual* can result in claims for warranty being denied.
- Product failures which result from operating the Product in an abusive, negligent, or reckless manner.
- Parts subject to consumption through use unless found to be defective. Examples of parts which are consumed, or used up, during normal Product operation include, but are not limited to, brake pads and linings, clutch linings, blades, reels, rollers and bearings (sealed or greasable), bed knives, spark plugs, castor wheels and bearings, tires, filters, belts, and certain sprayer components such as diaphragms, nozzles, and check valves, etc.
- Failures caused by outside influence. Conditions considered to be outside influence include, but are not limited to, weather, storage practices, contamination, use of unapproved fuels, coolants, lubricants, additives, fertilizers, water, or chemicals, etc.
- Failure or performance issues due to the use of fuels (e.g. gasoline, diesel, or biodiesel) that do not conform to their respective industry standards.
- Normal noise, vibration, wear and tear, and deterioration.
- Normal "wear and tear" includes, but is not limited to, damage to seats due to wear or abrasion, worn painted surfaces, scratched decals or windows, etc.

Parts

Parts scheduled for replacement as required maintenance are warranted for the period of time up to the scheduled replacement time for that part. Parts replaced under this warranty are covered for the duration of the original product warranty and become the property of Toro. Toro will make the final decision whether to repair any existing part or assembly or replace it. Toro may use remanufactured parts for warranty repairs.

Deep Cycle and Lithium-Ion Battery Warranty:

Deep cycle and Lithium-Ion batteries have a specified total number of kilowatt-hours they can deliver during their lifetime. Operating, recharging, and maintenance techniques can extend or reduce total battery life. As the batteries in this product are consumed, the amount of useful work between charging intervals will slowly decrease until the battery is completely worn out. Replacement of worn out batteries, due to normal consumption, is the responsibility of the product owner. Battery replacement may be required during the normal product warranty period at owner's expense. Note: (Lithium-Ion battery only): A Lithium-Ion battery has a part only prorated warranty beginning year 3 through year 5 based on the time in service and kilowatt hours used. Refer to the *Operator's Manual* for additional information.

Maintenance is at Owner's Expense

Engine tune-up, lubrication, cleaning and polishing, replacement of filters, coolant, and completing recommended maintenance are some of the normal services Toro products require that are at the owner's expense.

General Conditions

Repair by an Authorized Toro Distributor or Dealer is your sole remedy under this warranty.

Neither The Toro Company nor Toro Warranty Company is liable for indirect, incidental or consequential damages in connection with the use of the Toro Products covered by this warranty, including any cost or expense of providing substitute equipment or service during reasonable periods of malfunction or non-use pending completion of repairs under this warranty. Except for the Emissions warranty referenced below, if applicable, there is no other express warranty. All implied warranties of merchantability and fitness for use are limited to the duration of this express warranty.

Some states do not allow exclusions of incidental or consequential damages, or limitations on how long an implied warranty lasts, so the above exclusions and limitations may not apply to you. This warranty gives you specific legal rights, and you may also have other rights which vary from state to state.

Note regarding engine warranty:

The Emissions Control System on your Product may be covered by a separate warranty meeting requirements established by the U.S. Environmental Protection Agency (EPA) and/or the California Air Resources Board (CARB). The hour limitations set forth above do not apply to the Emissions Control System Warranty. Refer to the Engine Emission Control Warranty Statement supplied with your product or contained in the engine manufacturer's documentation for details

Countries Other than the United States or Canada

Customers who have purchased Toro products exported from the United States or Canada should contact their Toro Distributor (Dealer) to obtain guarantee policies for your country, province, or state. If for any reason you are dissatisfied with your Distributor's service or have difficulty obtaining guarantee information, contact the Toro importer.

374-0253 Rev D