Form No. 3401-829 Rev C

TORO®

Count on it.

Operator's Manual

Groundsmaster® 4500-D and 4700-D Traction Unit

Model No. 30881—Serial No. 315000001 and Up
Model No. 30881A—Serial No. 315000001 and Up
Model No. 30882—Serial No. 315000001 and Up
Model No. 30882A—Serial No. 315000001 and Up

Register at www.Toro.com.
Original Instructions (EN)

CE

3401-829 C

This product complies with all relevant European directives, for details please see the separate product specific Declaration of Conformity (DOC) sheet.

⚠ WARNING

CALIFORNIA
Proposition 65 Warning

This product contains a chemical or chemicals known to the State of California to cause cancer, birth defects, or reproductive harm.

Diesel engine exhaust and some of its constituents are known to the State of California to cause cancer, birth defects, and other reproductive harm.

Genuine Toro spark arresters are approved by the USDA Forestry Service.

It is a violation of California Public Resource Code Section 4442 or 4443 to use or operate the engine on any forest-covered, brush-covered, or grass-covered land unless the engine is equipped with a spark arrester, as defined in Section 4442, maintained in effective working order or the engine is constructed, equipped, and maintained for the prevention of fire.

This spark ignition system complies with Canadian ICES-002

The enclosed *Engine Owner's Manual* is supplied for information regarding the US Environmental Protection Agency (EPA) and the California Emission Control Regulation of emission systems, maintenance, and warranty. Replacements may be ordered through the engine manufacturer.

Introduction

This machine is a ride-on, rotary-blade lawn mower intended to be used by professional, hired operators in commercial applications. It is primarily designed for cutting grass on well-maintained lawns in parks, golf courses, sports fields, and on commercial grounds. It is not designed for cutting brush, mowing grass and other growth alongside highways, or for agricultural uses.

Read this information carefully to learn how to operate and maintain your product properly and to avoid injury and product damage. You are responsible for operating the product properly and safely.

You may contact Toro directly at www.Toro.com for product safety and operation training materials, accessory information, help finding a dealer, or to register your product.

Whenever you need service, genuine Toro parts, or additional information, contact an Authorized Service Dealer or Toro Customer Service and have the model and serial numbers of your product ready. Figure 1 identifies the location of the model and serial numbers on the right front frame member of the product. Write the numbers in the space provided.

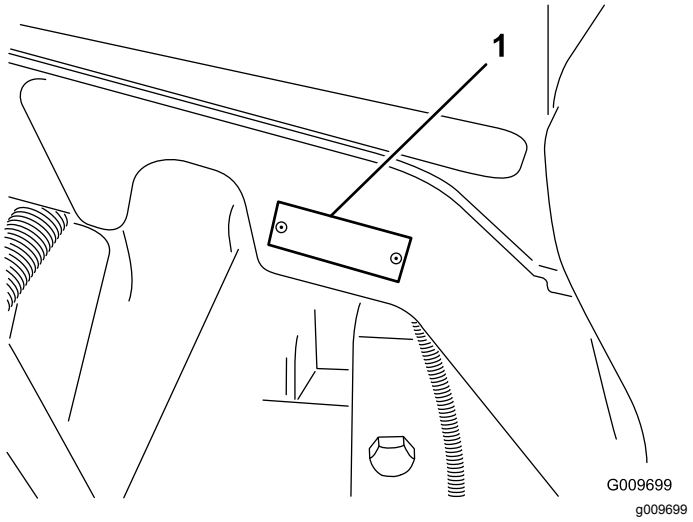

Figure 1

1. Model and serial number location

Model No. _____

Serial No. _____

This manual identifies potential hazards and has safety messages identified by the safety-alert symbol (Figure 2), which signals a hazard that may cause serious injury or death if you do not follow the recommended precautions.



Figure 2

1. Safety-alert symbol.

This manual uses 2 words to highlight information. **Important** calls attention to special mechanical information and **Note** emphasizes general information worthy of special attention.

© 2017—The Toro® Company
8111 Lyndale Avenue South
Bloomington, MN 55420

Contact us at www.Toro.com.
Printed in the USA
All Rights Reserved

Contents

Safety 4
General Safety 4
Sound Power Level 4
Sound Pressure Level 4
Vibration Level 4
Engine Emission Certification 4
Safety and Instructional Decals 5
Setup 10
1 Installing the Hood Latch (CE Only) 11
2 Adjusting the Roller Scraper (Optional) 12
3 Installing the Mulching Baffle (Optional) 12
4 Preparing the Machine 13
Product Overview 13
Controls 13
Specifications 20
Attachments/Accessories 20
Before Operation 21
Before Operation Safety 21
Checking the Engine-Oil Level 22
Checking the Cooling System 22
Checking the Hydraulic System 22
Filling the Fuel Tank 22
Checking the Tire Pressure 23
Checking the Torque of the Wheel Nuts 23
Adjusting the Height of Cut 24
Checking the Interlock Switches 24
Checking the Blade-Stopping Time 25
Selecting a Blade 25
Choosing Accessories 26
During Operation 27
During Operation Safety 27
Starting and Stopping the Engine 28
Cutting Grass with the Machine 28
Diesel Particulate Filter Regeneration 29
Understanding the Operating Characteristics of the Machine 37
Operating the Engine-Cooling Fan 37
Operating Tips 37
After Operation 39
After Operation Safety 39
Jacking Points 39
Tie Downs 39
Pushing or Towing the Machine 39
Hauling the Machine 40
Maintenance 41
Recommended Maintenance Schedule(s) 41
Daily Maintenance Checklist 42
Service Interval Chart 43
Pre-Maintenance Procedures 44
Removing the Hood 44
Lubrication 44
Greasing the Bearings and Bushings 44
Engine Maintenance 46
Engine Safety 46
Servicing the Air Cleaner 46
Servicing the Engine Oil 47
Servicing the Diesel-Oxidation Catalyst (DOC) and the Soot Filter 48
Fuel System Maintenance 49
Draining the Fuel Tank 49
Inspecting the Fuel Lines and Connections 49
Servicing the Water Separator 49
Servicing the Fuel Filter 50
Servicing the Fuel-Pickup Tube 50
Electrical System Maintenance 50
Charging and Connecting the Battery 50
Servicing the Battery 52
Fuses 52
Drive System Maintenance 53
Checking for End-Play in the Planetary Drives 53
Checking the Planetary Gear Drive Oil 53
Changing the Planetary Gear Drive Oil 53
Checking the Rear Axle Lubricant 54
Changing the Rear Axle Lubricant 54
Checking the Rear Axle Gear Box Lubricant 55
Checking the Rear Wheel Toe-In 55
Cooling System Maintenance 56
Cooling System Safety 56
Checking the Cooling System 56
Cleaning the Cooling System 56
Brake Maintenance 58
Adjusting the Service Brakes 58
Belt Maintenance 58
Servicing the Alternator Belt 58
Hydraulic System Maintenance 59
Hydraulic System Safety 59
Checking the Hydraulic-Fluid Level 59
Changing the Hydraulic Fluid 60
Replacing the Hydraulic Filters 61
Checking the Hydraulic Lines and Hoses 61
Cutting Deck Maintenance 62
Separating the Cutting Decks from the Traction Unit 62
Mounting the Cutting Decks to the Traction Unit 62
Servicing the Blade Plane 62
Servicing the Cutter Blade 63
Servicing the Front Roller 65
Storage 66
Preparing the Traction Unit 66
Preparing the Engine 66
Cutting Deck 66

Safety

This machine has been designed in accordance with EN ISO 5395:2013 and ANSI B71.4-2012.

General Safety

This product is capable of amputating hands and feet and of throwing objects. Always follow all safety instructions to avoid serious personal injury.

Using this product for purposes other than its intended use could prove dangerous to you and bystanders.

- Read and understand the contents of this *Operator's Manual* before you start the engine. Ensure that everyone using this product knows how to use it and understands the warnings.
- Do not put your hands or feet near moving components of the machine.
- Do not operate the machine without all guards and other safety protective devices in place and working on the machine.
- Keep clear of any discharge opening. Keep bystanders a safe distance from the machine.
- Keep children out of the operating area. Never allow children to operate the machine.
- Stop the machine and shut off the engine before servicing, fueling, or unclogging the machine.

Improperly using or maintaining this machine can result in injury. To reduce the potential for injury, comply with these safety instructions and always pay attention to the safety-alert symbol, which means Caution, Warning, or Danger—personal safety instruction. Failure to comply with these instructions may result in personal injury or death.

You can find additional items of safety information in their respective sections throughout this manual.

Sound Power Level

This unit has a guaranteed sound power level of 105 dBA, which includes an Uncertainty Value (K) of 0.7 dBA.

Sound power level was determined according to the procedures outlined in ISO 11094.

Sound Pressure Level

This unit has a sound pressure level at the operator's ear of 90 dBA, which includes an Uncertainty Value (K) of 0.7 dBA.

Sound pressure level was determined according to the procedures outlined in EN ISO 5395:2013.

Vibration Level

Hand-Arm

Measured vibration level for right hand = 0.6 m/s^2

Measured vibration level for left hand =0.7 m/s^2

Uncertainty Value (K) = 0.3 m/s^2

Measured values were determined according to the procedures outlined in EN ISO 5395:2013.

Whole Body

Measured vibration level = 0.2 m/s^2

Uncertainty Value (K) = 0.1 m/s^2

Measured values were determined according to the procedures outlined in EN ISO 5395:2013.

Engine Emission Certification

The engine in this machine is EPA Tier 4 Final and stage 3b compliant.

Safety and Instructional Decals

Safety decals and instructions are easily visible to the operator and are located near any area of potential danger. Replace any decal that is damaged or lost.

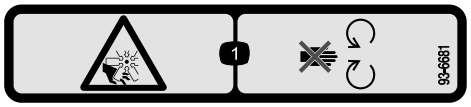

decal93-6681

93-6681

1. Cutting/dismemberment—hazard, fan-stay away from moving parts.

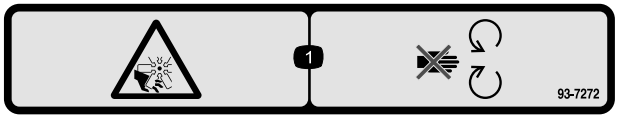

decal93-7272

93-7272

1. Cutting/dismemberment hazard; fan—stay away from moving parts.

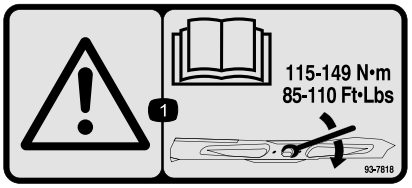

decal93-7818

93-7818

1. Warning—read the *Operator's Manual* for instructions on torquing the blade bolt/nut to 115 to 149 N-m (85 to 110 ft-lb).



decal98-4387

98-4387

1. Warning—wear hearing protection.

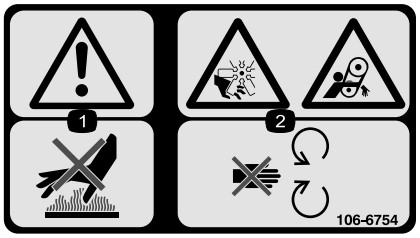

decal106-6754

106-6754

1. Warning—do not touch the hot surface.
2. Cutting/dismemberment hazard, fan and entanglement hazard, belt—stay away from moving parts.



decal106-6755

106-6755

1. Engine coolant under pressure.
2. Explosion hazard—read the *Operator's Manual.*
3. Warning—do not touch the hot surface.
4. Warning—read the *Operator's Manual.*

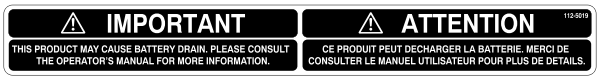

decal112-5019

112-5019

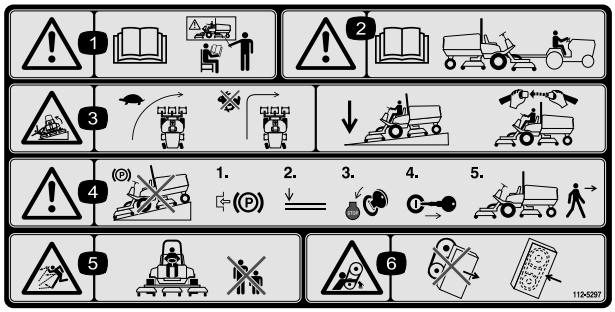

decal112-5297

112-5297

1. Warning—read the *Operator's Manual*, do not operate this machine unless you are trained.
2. Warning—read the *Operator's Manual* before towing the machine.
3. Tipping hazard—slow machine before turning, do not turn at high speeds; lower the cutting unit when driving down slopes; use a rollover protection system and wear the seat belt
4. Warning—do not park the machine on slopes; engage the parking brake, lower the cutting units, shut off the engine, and remove the ignition key before leaving the machine.
5. Thrown object hazard—keep bystanders a safe distance from the machine.
6. Entanglement hazard, belt—stay away from moving parts, keep all guards and shields in place.

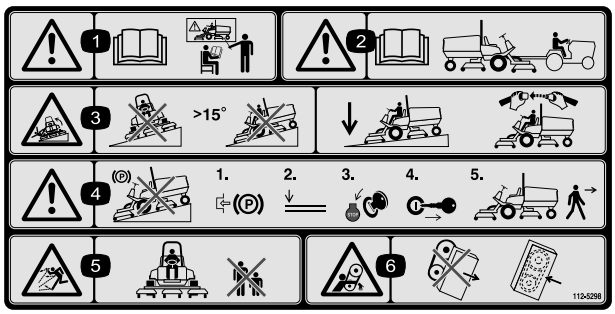

decal112-5298

112-5298

(Place over Part No. 112-5297 for CE*)

* This safety decal includes a slope warning required on the machine for compliance to the European Lawn Mower Safety Standard EN836:1997. The conservative maximum slope angles indicated for operation of this machine are prescribed by and required by this standard.

1. Warning—read the *Operator's Manual*, do not operate this machine unless you are trained.
2. Warning—read the *Operator's Manual* before towing the machine.
3. Tipping hazard—do not operate on slopes greater than 15°; lower the cutting units when operating on slopes; wear the safety belt.
4. Warning—do not park the machine on slopes; engage the parking brake, lower the cutting units, shut off the engine, and remove the ignition key before leaving the machine.
5. Thrown object hazard—keep bystanders a safe distance from the machine.
6. Entanglement hazard, belt—stay away from moving parts, keep all guards and shields in place.



decal117-2718

117-2718

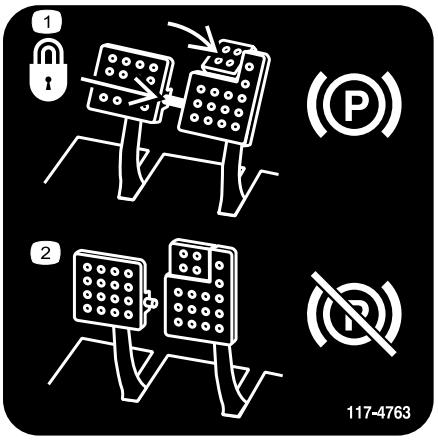

decal117-4763

117-4763

1. To engage the parking brake, secure the brake pedals with the locking pin, press the parking brake pedals and engage the toe pedal.
2. To disengage the parking brake, disengage the locking pin and release the pedals.

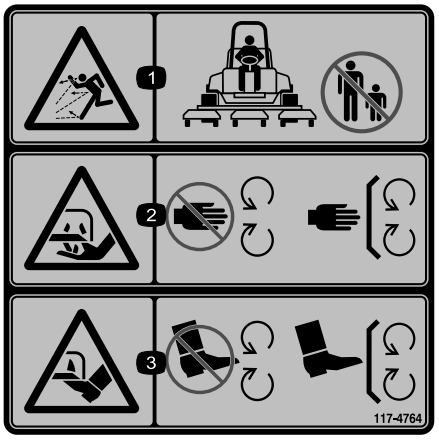

decal117-4764

117-4764

1. Thrown object hazard—keep bystanders a safe distance from the machine.
2. Cutting hazard of hand, mower blade—stay away from moving parts, keep all guards and shields in place.
3. Cutting hazard of foot, mower blade—stay away from moving parts, keep all guards and shields in place.

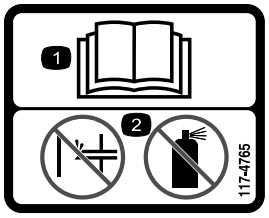

decal117-4765

117-4765

1. Read the *Operator's Manual.*
2. Do not use starting aids.

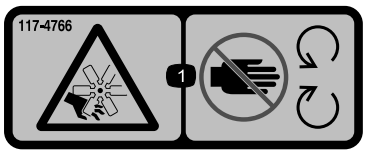

decal117-4766

117-4766

1. Cutting/dismemberment hazard; fan—stay away from moving parts, keep all guards and shields in place.

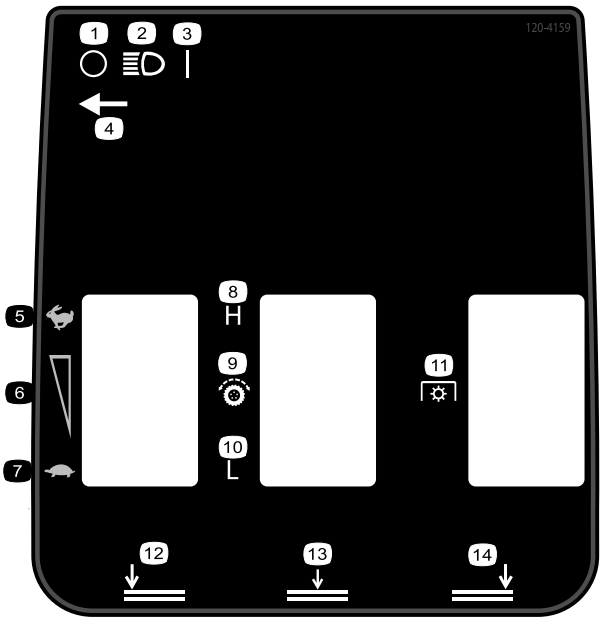

decal120-4159

120-4159

Groundsmaster 4700 Shown

1. Off
2. Lights
3. On
4. Light switch location
5. Fast
6. Variable speed adjustment
7. Slow
8. High
9. Traction drive
10. Low
11. Power takeoff (PTO)
12. Lower left deck
13. Lower center deck
14. Lower right deck

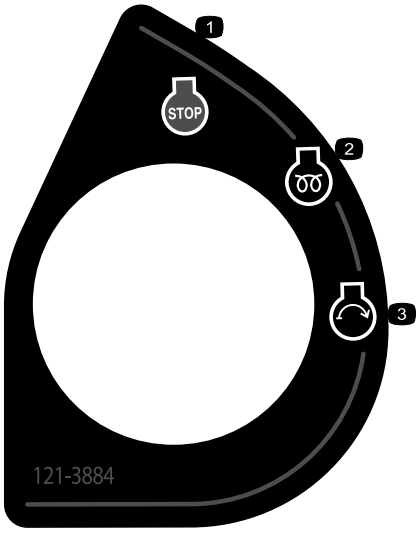

decal121-3884

121-3884

1. Engine—stop
2. Engine—preheat
3. Engine—start

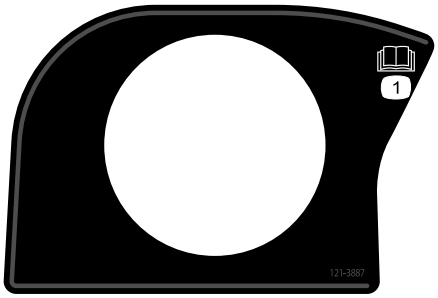

decal121-3887

121-3887

1. Read the *Operator's Manual*.

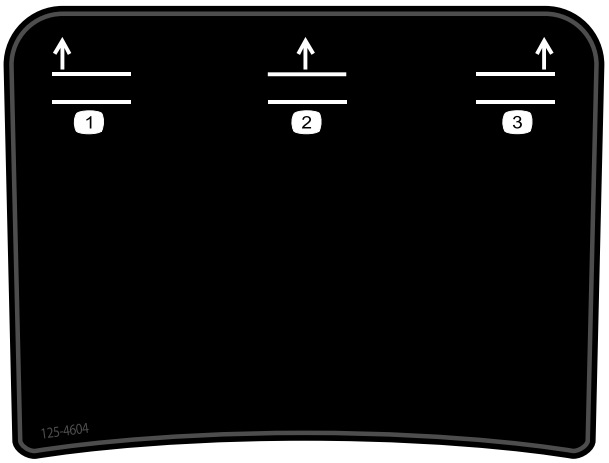

decal125-4604

125-4604

Groundsmaster 4700 Shown

1. Raise left deck
2. Raise center deck
3. Raise right deck

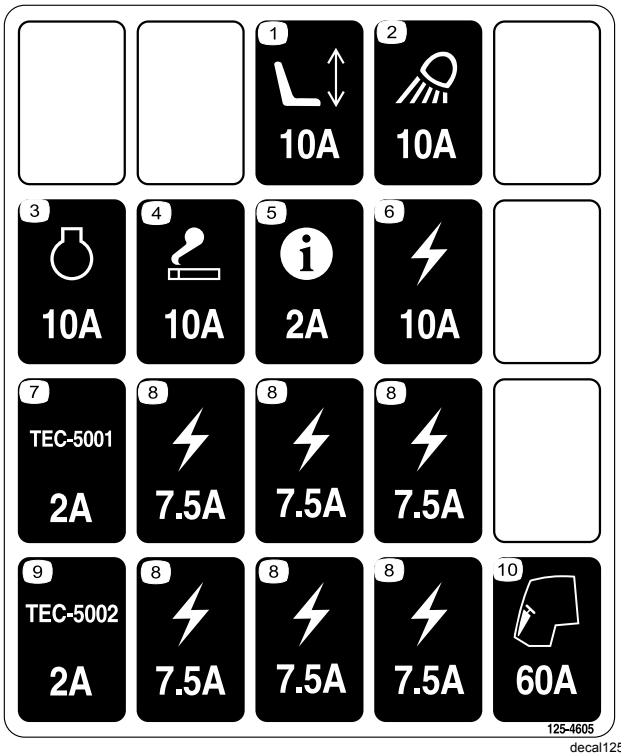

decal125-4605

125-4605

1. Power seat—10 A
2. Work light—10 A
3. Engine—10 A
4. Cigarette lighter—10 A
5. Infocenter—2 A
6. Power supplied—10 A
7. TEC-5001—2 A
8. Power supplied—7.5 A
9. TEC-5002—2 A
10. Cab—60 A



decalbatterysymbols

Battery Symbols

Some or all of these symbols are on your battery.

1. Explosion hazard
2. No fire, open flame, or smoking
3. Caustic liquid/chemical burn hazard
4. Wear eye protection.
5. Read the *Operator's Manual.*
6. Keep bystanders a safe distance from the battery.
7. Wear eye protection; explosive gases can cause blindness and other injuries.
8. Battery acid can cause blindness or severe burns.
9. Flush eyes immediately with water and get medical help fast.
10. Contains lead; do not discard

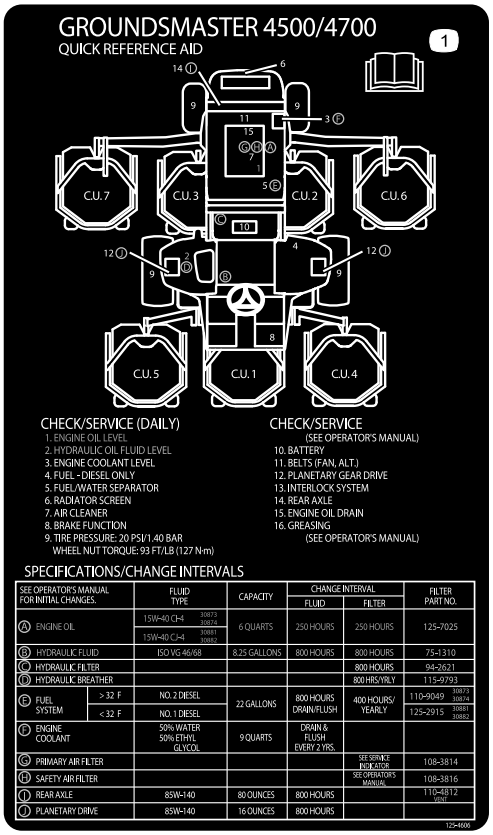

decal125-4606

125-4606

1. Read the *Operator's Manual* for information on maintenance.

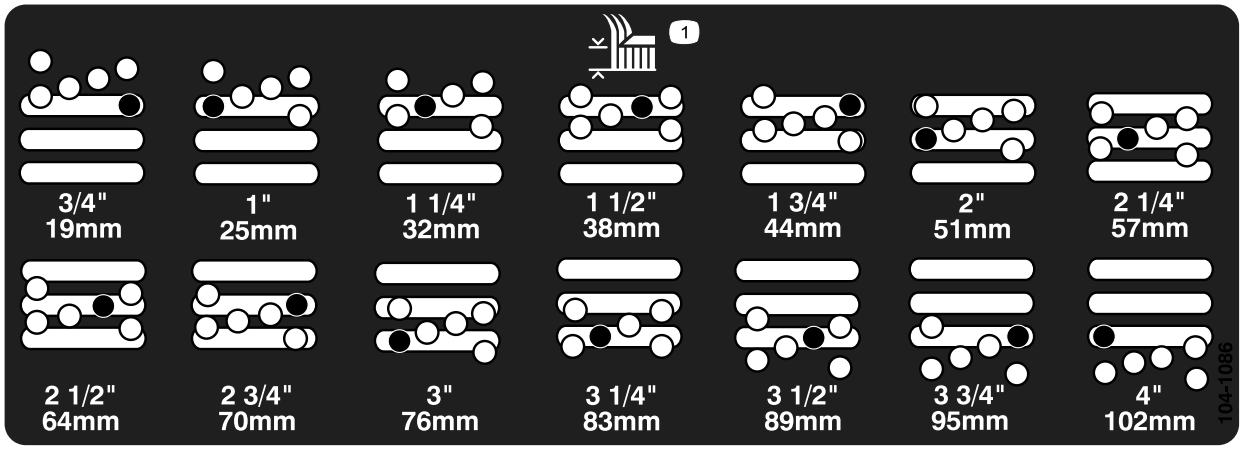

decal104-1086

104-1086

1. Height of cut

Setup

Loose Parts

Use the chart below to verify that all parts have been shipped.

Procedure	Description	Qty.	Use
1	Lock bracket Rivet Washer Screw (1/4 x 2 inches) Locknut (1/4 inch)	1 2 1 1 1	Install the hood latch (CE).
2	No parts required	–	Adjust the roller scraper (optional).
3	No parts required	–	Install the mulching baffle (optional).
4	No parts required	–	Prepare the machine.

Media and Additional Parts

Description	Qty.	Use
Warning Decal	6	Affix the CE warning decals over the corresponding English warning decals.
Operator's Manual	1	Read before operating machine
Engine Operator's Manual	1	Read before operating engine
Parts Catalog	1	Use to reference part numbers
Operator Training Material	1	View before operating machine

Note: Determine the left and right sides of the machine from the normal operating position.

1

Installing the Hood Latch (CE Only)

Parts needed for this procedure:

1	Lock bracket
2	Rivet
1	Washer
1	Screw (1/4 x 2 inches)
1	Locknut (1/4 inch)

Procedure

1. Unhook the hood latch from the hood-latch bracket.
2. Remove the 2 rivets securing the hood-latch bracket to the hood (Figure 3). Remove the hood-latch bracket from the hood.

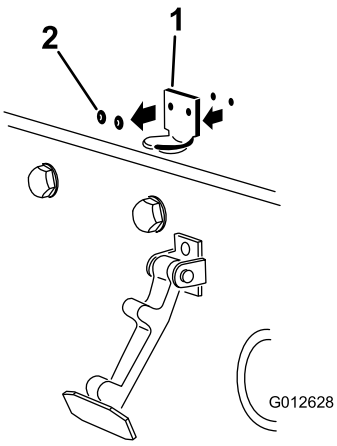

g012628

Figure 3

1. Hood latch bracket
2. Rivets

3. While aligning the mounting holes, position the CE-lock bracket and the hood-latch bracket onto the hood. The lock bracket must be against the hood (Figure 4). Do not remove the bolt and nut assembly from the lock-bracket arm.

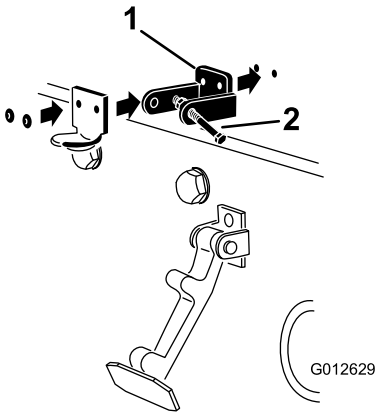

g012629

Figure 4

1. CE lock bracket
2. Bolt and nut assembly

4. Align the washers with the holes on the inside of the hood.
5. Rivet the brackets and the washers to the hood (Figure 4).
6. Hook the latch onto the hood-latch bracket (Figure 5).

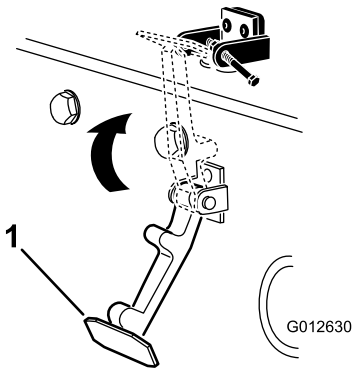

g012630

Figure 5

1. Hood latch

7. Screw the bolt into the other arm of the hood-lock bracket to lock the latch in position (Figure 6). Tighten the bolt but do not tighten the nut.

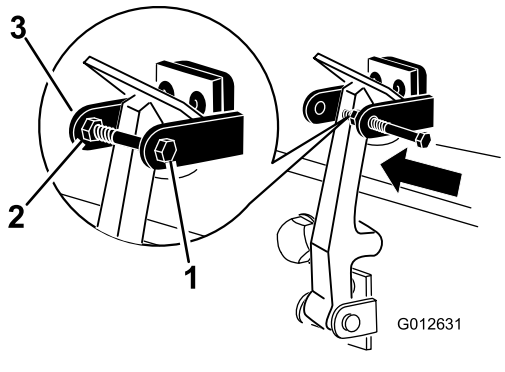

Figure 6

1. Bolt
2. Nut
3. Arm of hood-lock bracket

2

Adjusting the Roller Scraper (Optional)

No Parts Required

Procedure

The optional rear roller scraper is designed to work best when there is an even gap of 0.5 to 1 mm (0.020 to 0.040 inch) between the scraper and roller.

1. Loosen the grease fitting and the mounting screw (Figure 7).

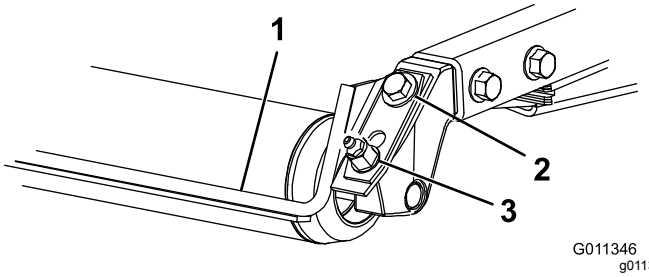

Figure 7

1. Roller scraper
2. Mounting screw
3. Grease fitting

2. Slide the scraper up or down until a gap of 0.5 to 1 mm (0.020 to 0.040 inch) is achieved between the rod and the roller.
3. Secure the grease fitting and screw to 41 N-m (30 ft-lb) in an alternating sequence.

3

Installing the Mulching Baffle (Optional)

No Parts Required

Procedure

1. Thoroughly clean debris from the mounting holes on the rear wall and left side wall of the chamber.
2. Install the mulching baffle in the rear opening and secure it with 5 flange-head bolts (Figure 8).

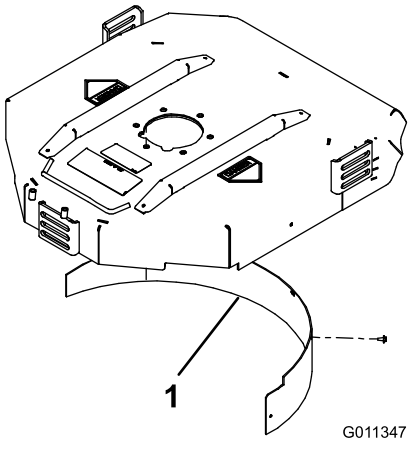

Figure 8

1. Mulching baffle

3. Verify that mulching baffle does not interfere with the tip of the blade and does not protrude inside the surface of the rear chamber wall.

⚠ DANGER

Using the high-lift blade with the mulching baffle could cause the blade to break, resulting in personal injury or death.

Do not use the high-lift blade with the mulching baffle.

4

Preparing the Machine

No Parts Required

Checking the Tire Pressure

Check the tire pressure before use; refer to Checking the Tire Pressure (page 23).

Important: **Maintain pressure in all tires to ensure a good quality-of-cut and proper machine performance.** ***Do not underinflate the tires.***

Checking the Fluid Levels

1. Check the rear-axle lubricant level before the engine is first started, refer to Checking the Rear Axle Gear Box Lubricant (page 55).
2. Check the engine-oil level before starting the engine; refer to Checking the Engine-Oil Level (page 47).
3. Check the hydraulic-fluid level before starting the engine; refer to Checking the Hydraulic-Fluid Level (page 59).
4. Check the cooling system before starting the engine; refer to Checking the Cooling System (page 56).

Greasing the Machine

Grease the machine before use; refer to Greasing the Bearings and Bushings (page 44). Failure to properly grease the machine results in premature failure of critical parts.

Product Overview

Controls

Brake Pedals

2 foot pedals (Figure 9) operate individual wheel brakes for turning assistance and to aid in obtaining better side hill traction.

Pedal-Locking Latch

The pedal-locking latch (Figure 9) connects the brake pedals. Use the latch to connect the pedals to engage the parking brake and while operating the machine in transport mode.

Parking-Brake Pedal

To engage the parking brake, (Figure 9) connect the pedals together with the pedal-locking latch and push down on the right brake pedal while engaging the toe pedal. To release the parking brake, press 1 of the brake pedals until the parking brake latch retracts.

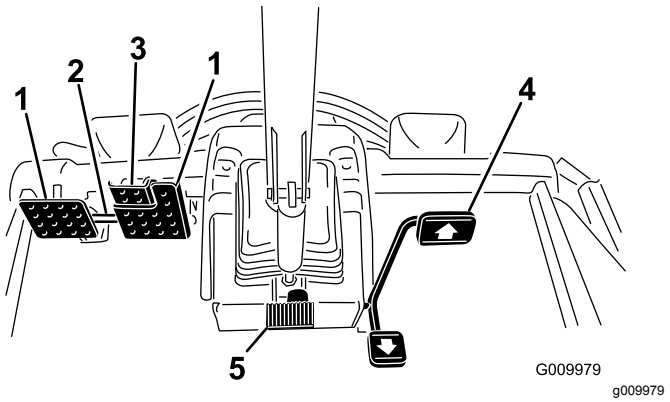

Figure 9

1. Brake pedal
2. Pedal-locking latch
3. Parking-brake pedal
4. Traction pedal
5. Tilt-steering pedal

Traction Pedal

The traction pedal (Figure 9) controls forward and reverse operation. Press the top of the pedal to move forward and the bottom to move backward.

To stop the machine, use one of the following procedures:

- Reduce your foot pressure on the traction pedal and allow it to return to the center position. The machine will dynamically brake to a smooth stop.
- Tap or hold the reverse pedal briefly. This stops the machine faster than dynamic braking.

Note: In emergency braking situations, press the service brake pedals in addition to using the reverse pedal as stated above. This is the quickest method to stop the machine.

Tilt-Steering Pedal

To tilt the steering wheel toward you, press the foot pedal (Figure 9) down, and pull the steering tower toward you to the most comfortable position and then release the pedal.

High-Low Speed Control

The switch (Figure 10) allows the speed range to increase for transporting the machine. To switch between the High and Low speed ranges, raise the decks, disengage the PTO, put the traction pedal into the NEUTRAL position, and move the machine at a slow speed.

Note: The cutting decks do not operate and/or cannot be lowered from the transport position when the switch is in the high range.

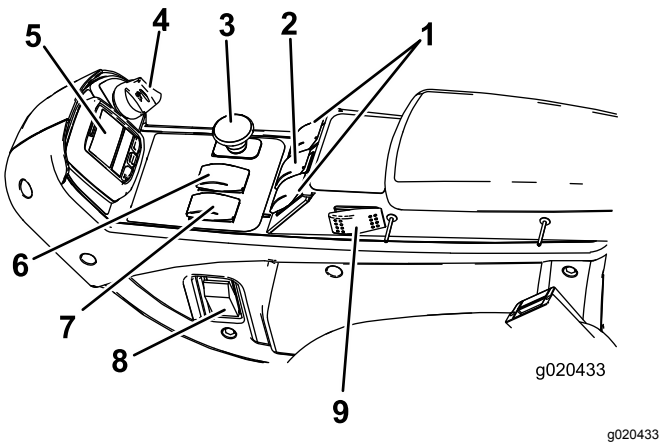

g020433

Figure 10

1. Lift switches (Groundsmaster 4700 only)
2. Lift switch (Groundsmaster 4500 and 4700)
3. PTO switch
4. Key switch
5. InfoCenter
6. Hi-Lo speed control
7. Engine-speed switch
8. Light switch
9. Cruise control

Key Switch

The key switch (Figure 10) has 3 positions: Off, On/Preheat, and Start.

PTO Switch

The PTO switch (Figure 10) has 2 positions: Out (start) and In (stop). Pull the PTO button out to engage the cutting unit blades. Push in the button to disengage the cutting unit blades.

Engine-Speed Switch

The engine-speed switch (Figure 10) has 2 modes to change the engine speed. Tap the switch to increase or decrease the engine speed in 100 rpm increments. Hold down the switch to automatically move to High or Low idle, depending on which end of the switch is depressed.

Lift Switches

The lift switches (Figure 10) raise and lower the cutting units. Press the switches forward to lower the cutting units and backward to raise the cutting units. When starting the machine, with the cutting units in the down position, press the lift switch down to allow the cutting units to float, and mow.

Note: The decks do not lower while in the Hi speed range and they do not raise or lower if the operator is out of the seat when the engine is running. To lower the decks for service, rotate the key in the ignition switch to the ON position while sitting in the seat.

Light Switch

Press the lower edge of the switch (Figure 10) to turn on the lights. Press the upper edge of the switch to turn off the lights.

Power Point

Use the power point (Figure 11) to power optional 12 V electrical accessories.

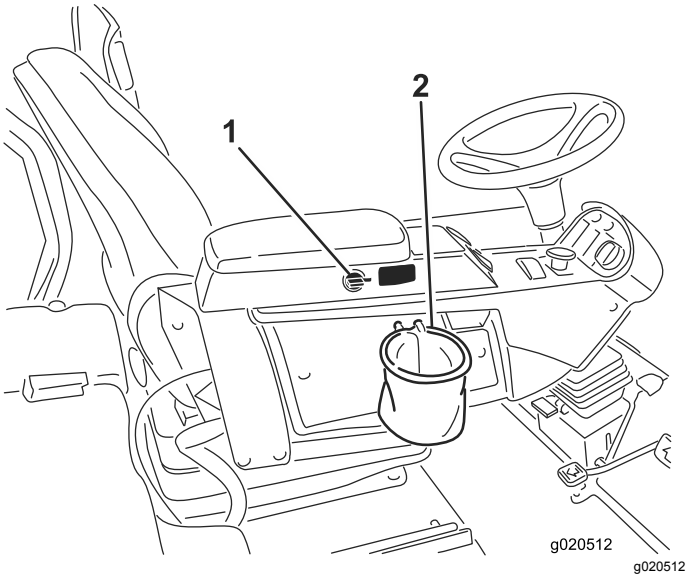

g020512

Figure 11

1. Power point
2. Bag holder

Bag Holder

Use the bag holder (Figure 11) for storage.

Seat Adjustments

Seat Adjusting Lever

Pull out on the lever to slide the seat forward or rearward (Figure 12).

Seat Arm Rest Adjusting Knob

Rotate the knob to adjust the seat arm rest angle.

Seat Back Adjusting Lever

Move the lever to adjust the seat back angle (Figure 12).

Weight gauge

Indicates when the seat is adjusted to the weight of the operator (Figure 12). Height adjustment is made by positioning the suspension within the range of the green region.

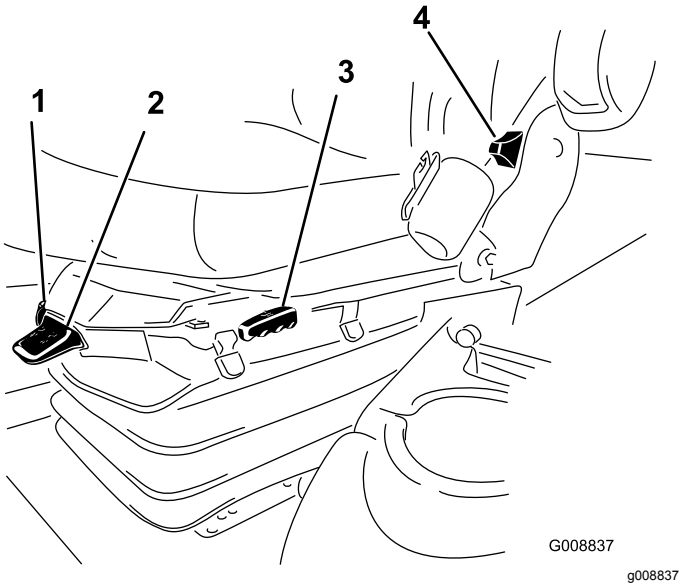

Figure 12

1. Weight gauge
2. Weight-adjusting lever
3. Seat adjusting lever
4. Seat back adjusting lever
5. Arm rest adjusting knob (not shown-located under arm rest)

Weight-Adjusting Lever

Adjust for your weight (Figure 12). Pull up the lever to increase the air pressure and push down to decrease the air pressure. You attain the proper adjustment when the weight gauge is in the green region.

Using the InfoCenter LCD Display

The InfoCenter LCD display shows information about your machine, such as the operating status, various diagnostics and other information about the machine (Figure 13). There is a splash screen and main information screen of the InfoCenter. You can switch between the splash screen and main information screen at any time by pressing any of the InfoCenter buttons and then selecting the appropriate directional arrow.

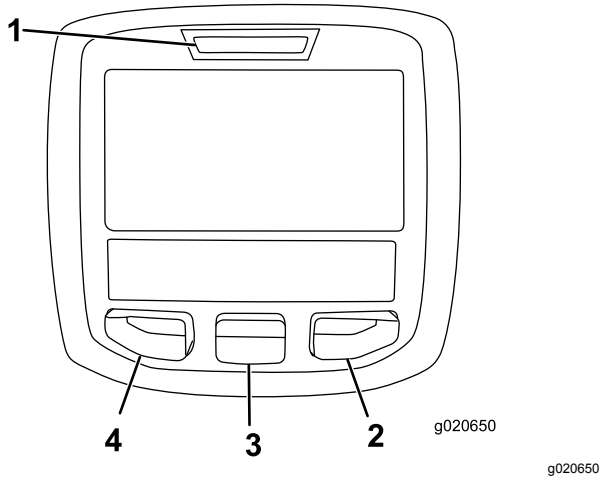

Figure 13

1. Indicator light
2. Right button
3. Middle button
4. Left button

- Left Button, Menu Access/Back Button—press this button to access the InfoCenter menus. You can use it to exit any menu that you are currently using.
- Middle Button—use this button to scroll down menus.
- Right Button—use this button to open a menu where a right arrow indicates additional content.
- Beeper—activated when lowering the decks or for advisories and faults.

Note: The purpose of each button may change depending on what is required at the time. Each button is labeled with an icon displaying its current function.

InfoCenter Icon Description

SERVICE DUE	Indicates when scheduled service should be performed
n min	The status of the engine rpm.
i	Info icon
	Maximum traction speed setting
	Fast
	Slow
	The fan is reversed.
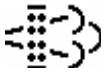	Stationary regeneration is required.
	The air-intake heater is active
	Raise the left deck.
	Raise the center deck
	Raise the right deck
	The operator must sit in the seat.
	The parking brake is on.
H	The range is high.
N	Neutral
L	Identifies the range as Low
	Coolant temperature (°C or °F)
	Temperature (hot)
	Traction or Traction Pedal
	Not allowed
	Start the engine.
	The PTO is on.

InfoCenter Icon Description (cont'd.)

	The cruise control is on.
	Stop the engine.
	Engine
	Key switch
	Cutting units are lowering.
	Cutting units are raising.
PIN	PIN code
	Hydraulic fluid temperature
CAN	CAN bus
	InfoCenter
Bad	Bad or failed
Ctr	Center
Rht	Right
Left	Left
	Bulb
OUT	Output of TEC controller or control wire in harness
HI	Over the allowed range
LO	Under the allowed range
HI /LO	Out of range
	Switch
	Operator must release switch.
	Operator should change to indicated state.

InfoCenter Icon Description (cont'd.)

Symbols are often combined to form sentences. Some examples are shown below	
	Operator should put machine in neutral.
	Engine start is denied.
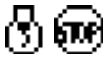	Engine shutdown.
	Engine coolant is too hot.
	Hydraulic fluid is too hot.
	DPF ash accumulation notification. Refer to Servicing the Diesel Particulate Filter (DPF) in the maintenance section for details.
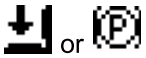 or	Sit down or set parking brake.

Using the Menus

To access the InfoCenter menu system, press the menu access button while at the main screen. This brings you to the main menu. Refer to the following tables for a synopsis of the options available from the menus:

Main Menu	
Menu Item	**Description**
Faults	Contains a list of the recent machine faults. Refer to the *Service Manual* or your Toro Distributor for more information on the Faults menu and the information contained there.
Service	Contains information on the machine such as hours of use and other similar numbers.
Diagnostics	Lists various states that the machine currently has. You can use this to troubleshoot certain issues as it quickly tells you which machine controls are on and which are off.
Settings	Allows you to customize and modify configuration variables on the InfoCenter display.
About	Lists the model number, serial number, and software version of your machine.

Service	
Menu Item	**Description**
Hours	Lists the total number of hours that the machine, engine and fan have been on, as well as the number of hours the machine has been transported and overheated.
Counts	Lists the number of starts, deck PTO cycles, and fan reversals the machine has experienced.

Diagnostics	
Menu Item	**Description**
Left Deck Center Deck Right Deck Traction Pedal Traction HI/LO Range PTO Engine Run	Refer to the *Service Manual* or your Toro Distributor for more information on the Engine Run menu and the information contained there.

Settings	
Menu Item	**Description**
Units	Controls the units used on the InfoCenter (English or Metric).
Language	Controls the language used on the InfoCenter*.
LCD Backlight	Controls the brightness of the LCD display.
LCD Contrast	Controls the contrast of the LCD display.
Protected Menus	Allows a person authorized by your company with the PIN code to access protected menus.
Protect Settings	Allows the ability to change the settings in the protected settings.
Auto Idle	Controls the amount of time allowed before idling the engine when the machine is not in use.
Mow Speed	Controls the maximum speed while in mow (low range).
Trans. Speed	Controls the maximum speed while in transport (high range).
Counterbalance	Controls the amount of counterbalance applied by the decks.

*Only "operator-faced" text is translated. Faults, Service, and Diagnostics screens are "service-faced." Titles are in the selected language, but menu items are in English.

About	
Menu Item	**Description**
Model	Lists the model number of the machine.
SN	Lists the serial number of the machine.
S/W Rev	Lists the software revision of the master controller.

Protected Menus

There are 5 operating configuration settings that are adjustable within the Settings Menu of the InfoCenter: auto idle, maximum mowing ground speed, maximum transport ground speed, Smart Power, and deck counter balance. These settings are in the Protected Menu.

Accessing Protected Menus

Note: The factory default PIN code for you machine is either 0000 or 1234.

If you changed the PIN code and forgot the code, contact your Authorized Toro Distributor for assistance.

1. From the MAIN MENU, use the center button to scroll down to the SETTINGS MENU and press the right button (Figure 14).

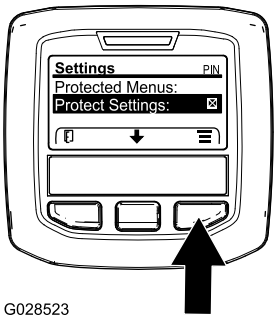

g028523

Figure 14

2. In the SETTINGS MENU, use the center button to scroll down to the PROTECTED MENU and press the right button (Figure 15A).

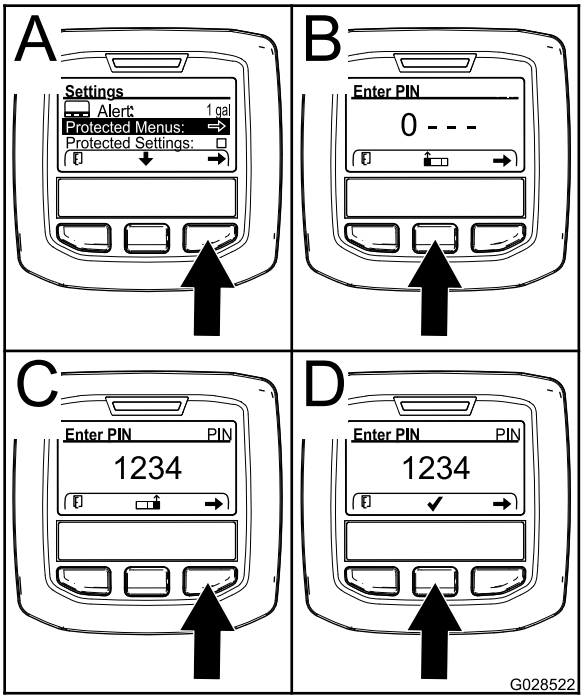

g028522

Figure 15

3. To enter the PIN code, press the center button until the correct first digit appears, then press the right button to move on to the next digit (Figure 15B and Figure 15C). Repeat this step until the last digit is entered and press the right button once more.
4. Press the middle button to enter the PIN code (Figure 15D).

   Wait until the red indicator light of the InfoCenter illuminates.

   Note: If the InfoCenter accepts the PIN code and the protected menu is unlocked, the word “PIN” displays in the upper right corner of the screen.

Note: Rotate the key switch to the OFF position and then to the ON position locks the protected menu.

You have the ability to view and change the settings in the Protected Menu. Once you access the Protected Menu, scroll down to Protect Settings option. Use the right button to change the setting. Setting the Protect Settings to OFF allows you to view and change the settings in the Protected Menu without entering the PIN code. Setting the Protect Settings to ON hides the protected options and requires you to enter the PIN code to change the setting in the Protected Menu. After you set the PIN code, rotate the key switch OFF and back to the ON position to enable and save this feature.

Viewing and Changing the Protected Menu Settings

1. In the Protected Menu, scroll down to Protect Settings.
2. To view and change the settings without entering a passcode, use the right button to change the Protect Settings to OFF.
3. To view and change the settings with a passcode, use the left button to select ON, set the passcode, and turn the key in the ignition switch to the OFF position and then to the ON position.

Setting the Auto Idle

1. In the Settings Menu, scroll down to Auto Idle.
2. Press the right button to change the auto-idle time between OFF, 8S, 10S, 15S, 20S, and 30S.

Setting the Maximum Allowed Mow Speed

1. In the Settings Menu, scroll down to Mow Speed and press the right button.
2. Use the right button to increase the max full mow speed (50%, 75%, or 100%).
3. Use the center button to decrease the max full mow speed (50%, 75%, or 100%).
4. Press the left button to exit.

Setting the Maximum Allowed Transport Speed

1. In the Settings Menu, scroll down to Transport Speed and press the right button.
2. Use the right button to increase the max transport speed (50%, 75%, or 100%).
3. Use the center button to decrease the max transport speed (50%, 75%, or 100%).
4. Press the left button to exit.

Turning the Smart Power ON/OFF

1. In the settings menu, scroll down to Smart Power.
2. Press the right button to switch between ON and OFF.
3. Press the left button to exit.

Setting the Counterbalance

1. In the Settings Menu, scroll down to Counter Balance and press the right button.
2. Press the right button to switch between Low, Med, and High.

When finished with the Protected Menu, press the left button to exit to the Main Menu, then press the left button to exit to the Run Menu.

Specifications

Note: Specifications and design are subject to change without notice.

	4500-D	4700-D
Width of cut	2.8 m (109 inches)	3.8 m (150 inches)
Overall width, cutting units down	286 cm (112.8 inches)	391 cm (153.8 inches)
Overall width, cutting units up (transport)	224 cm (88.25 inches)	224 cm (88.25 inches)
Overall length	370 cm (145.8 inches)	370 cm (145.8 inches)
Height with ROPS	216 cm (85 inches)	216 cm (85 inches)
Ground clearance	15 cm (6 inches)	15 cm (6 inches)
Track Width, front	224 cm (88.3 inches)	224 cm (88.3 inches)
Track Width, rear	141 cm (55.5 inches)	141 cm (55.5 inches)
Wheel base	171 cm (67-1/2 inches)	171 cm (67-1/2 inches)
Net Weight (with cutting units and no fluids)	1894 kg (4175 lb)	2,234 kg (4,925 lb)

Cutting Deck	
Length	86.4 cm (34 inches)
Width	86.4 cm (34 inches)
Height	24.4 cm (9.6 inches) to carrier mount 26.7 cm (10–1/2 inches) at 3/4 inch height of cut 34.9 cm (13–3/4 inches) at 4 inch height of cut
Weight	88 kg (195 lb)

Attachments/Accessories

A selection of Toro approved attachments and accessories is available for use with the machine to enhance and expand its capabilities. Contact your Authorized Service Dealer or Distributor or go to www.Toro.com for a list of all approved attachments and accessories.

To best protect your investment and maintain optimal performance of your Toro equipment, count on Toro genuine parts. When it comes to reliability, Toro delivers replacement parts designed to the exact engineering specification of our equipment. For peace of mind, insist on Toro genuine parts.

Operation

Note: Determine the left and right sides of the machine from the normal operating position.

Before Operation

Before Operation Safety

General Safety

- Never allow children or untrained people to operate or service the machine. Local regulations may restrict the age of the operator. The owner is responsible for training all operators and mechanics.
- Become familiar with the safe operation of the equipment, operator controls, and safety signs. Know how to stop the machine and engine quickly.
- Check that all safety devices are attached and functioning properly. This includes, but is not limited to, operator-presence controls; safety switches and shields; the rollover protection system (ROPS); attachments; and brakes. Do not operate the machine unless all safety devices are in position and functioning as intended by the manufacturer.
- Always inspect the machine to ensure that the blades, blade bolts, and cutting assembly are not worn or damaged. Replace worn or damaged blades and bolts in sets to preserve balance.
- Inspect the area where you will use the machine and remove all objects that the machine could potentially throw.
- Evaluate the terrain to determine the appropriate equipment and any attachments or accessories required to operate the machine properly and safely.

Fuel Safety

⚠ DANGER

In certain conditions, fuel is extremely flammable and highly explosive. A fire or explosion from fuel can burn you and others and can damage property.

- **Fill the fuel tank outdoors, in an open area, when the engine is cold. Wipe up any fuel that spills.**
- **Never fill the fuel tank inside an enclosed trailer.**
- **Never smoke when handling fuel, and stay away from an open flame or where fuel fumes may be ignited by a spark.**
- **Store fuel in an approved container and keep it out of the reach of children. Never buy more than a 180-day supply of fuel.**
- **Do not operate the machine without the entire exhaust system in place and in proper working condition.**

⚠ WARNING

Fuel is harmful or fatal if swallowed. Long-term exposure to vapors can cause serious injury and illness.

- **Avoid prolonged breathing of vapors.**
- **Keep your hands and face away from the nozzle and the fuel-tank opening.**
- **Keep fuel away from your eyes and skin.**
- Use only an approved fuel container.
- Never remove the fuel cap or add fuel to the fuel tank while the engine is running.
- Never fill containers inside a vehicle or on a truck or trailer bed with a plastic liner. Always place containers on the ground and away from your vehicle before filling.
- Remove the equipment from the truck or trailer and add fuel to it while it is on the ground. If this is not possible, then add fuel using a portable container rather than from a fuel-dispenser nozzle.
- Keep the fuel-dispenser nozzle in contact with the rim of the fuel tank or container opening at all times until fueling is complete. Do not use a nozzle lock-open device.
- If you spill fuel on your clothing, change your clothing immediately.
- Fill the fuel tank until the fuel level is 25 mm (1 inch) below the bottom of the filler neck. Do not

overfill the fuel tank. Replace the fuel-tank cap and tighten it securely.

Checking the Engine-Oil Level

Before you start the engine and use the machine, check the oil level in the engine crankcase; refer to Checking the Engine-Oil Level (page 47).

Checking the Cooling System

Before you start the engine and use the machine, check the cooling system; refer to Checking the Cooling System (page 56).

Checking the Hydraulic System

Before you start the engine and use the machine, check the hydraulic system; refer to Checking the Hydraulic Lines and Hoses (page 61).

Filling the Fuel Tank

Fuel Tank Capacity

Fuel tank capacity: 83 L (22 US gallons)

Fuel Specification

Important: **Use only ultra-low sulphur diesel fuel. Fuel with higher rates of sulfur degrades the diesel oxidation catalyst (DOC), which causes operational problems and shortens the service life of engine components.**

Failure to observe the following cautions may damage the engine.

- Never use kerosene or gasoline instead of diesel fuel.
- Never mix kerosene or used engine oil with the diesel fuel.
- Never keep fuel in containers with zinc plating on the inside.
- Do not use fuel additives.

Petroleum Diesel

Cetane rating: 45 or higher

Sulfur content: Ultra-low sulfur (<15 ppm)

Fuel Table

Diesel fuel specification	Location
ASTM D975 No. 1-D S15 No. 2-D S15	USA
EN 590	European Union
ISO 8217 DMX	International
JIS K2204 Grade No. 2	Japan
KSM-2610	Korea

- Use only clean, fresh diesel fuel or biodiesel fuels.
- Purchase fuel in quantities that can be used within 180 days to ensure fuel freshness.

Use summer-grade diesel fuel (No. 2-D) at temperatures above -7°C (20°F) and winter-grade fuel (No. 1-D or No. 1-D/2-D blend) below that temperature.

Note: Use of winter-grade fuel at lower temperatures provides lower flash point and cold flow characteristics which eases starting and reduces fuel filter plugging.

Using summer-grade fuel above -7°C (20°F) contributes toward longer fuel pump life and increased power compared to winter-grade fuel.

Biodiesel

This machine can also use a biodiesel blended fuel of up to B20 (20% biodiesel, 80% petroleum diesel).

Sulfur content: Ultra-low sulfur (<15 ppm)

Biodiesel fuel specification: ASTM D6751 or EN14214

Blended fuel specification: ASTM D975, EN590, or JIS K2204

Important: **The petroleum diesel portion must be ultra-low sulfur.**

Observe the following precautions:

- Biodiesel blends may damage painted surfaces.
- Use B5 (biodiesel content of 5%) or lesser blends in cold weather.
- Monitor seals, hoses, gaskets in contact with fuel as they may be degraded over time.
- Fuel filter plugging may be expected for a time after converting to biodiesel blends.
- Contact your Authorized Toro Distributor if you wish for more information on biodiesel.

Adding Fuel

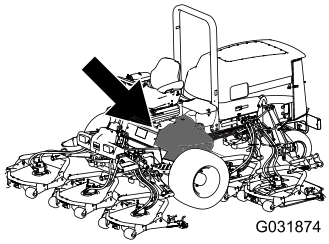

g031874

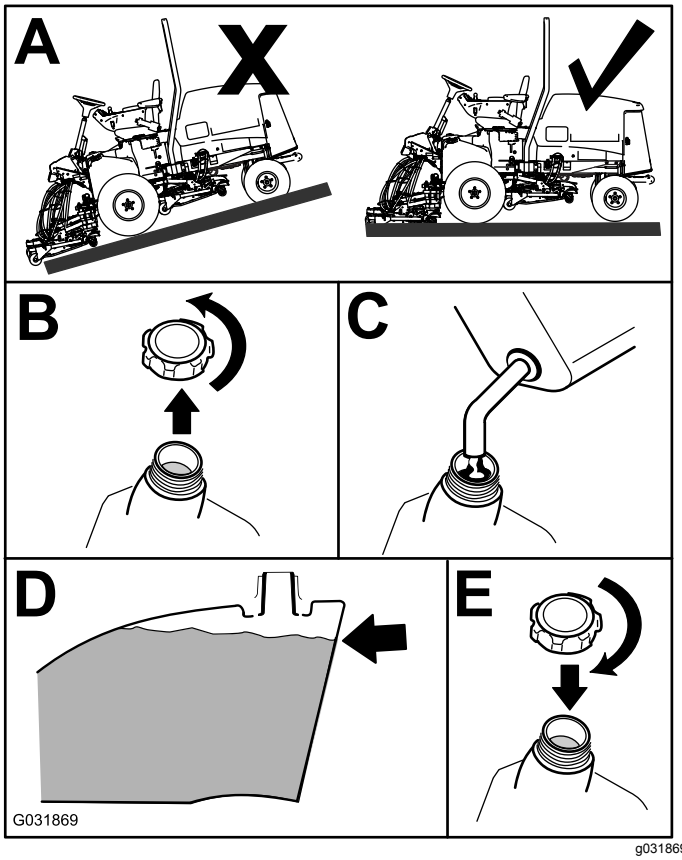

g031869

Figure 16

Fill the tank with diesel fuel until the level reaches the bottom of the filler neck.

Note: If possible, fill the fuel tank after each use; this will minimize possible buildup of condensation inside the fuel tank.

Checking the Tire Pressure

Service Interval: Before each use or daily

The correct air pressure in the tires is 138 kPa (20 psi).

Important: **Maintain the recommended pressure in all tires to ensure a good quality of cut and proper machine performance. Do not under-inflate the tires.**

Check the air pressure in all the tires before operating the machine.

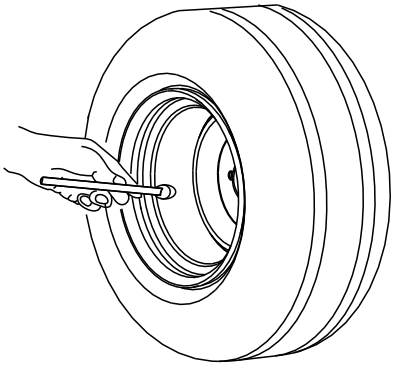

g001055

Figure 17

Checking the Torque of the Wheel Nuts

Service Interval: After the first 8 hours

Every 200 hours

⚠ WARNING

Failure to maintain proper torque of the wheel nuts could result in failure or loss of wheel and may result in personal injury.

Torque the front and rear wheel nuts to 115 to 136 N-m (85 to 100 ft-lb) after 1 to 4 hours of operation and again after 8 hours of operation. Torque every 200 hours thereafter.

Note: Front wheel nuts are 1/2-20 UNF. Rear wheel nuts are M12 x 1.6-6H (Metric).

Adjusting the Height of Cut

Important: **This cutting deck often cuts approximately 6 mm (1/4 inch) lower than a reel cutting unit with the same bench setting. It may be necessary to have these rotary cutting deck's bench set 6 mm (1/4 inch) above that of reels cutting in the same area.**

Important: **Access to the rear cutting units is greatly improved by removing the cutting unit from the tractor.**

1. Lower the cutting deck to the ground, shut off the engine, and remove the key from the ignition switch.
2. Loosen the bolt securing each height-of-cut bracket to the height-of-cut plate (front and each side); refer to Figure 18.
3. Beginning with front adjustment, remove the bolt.

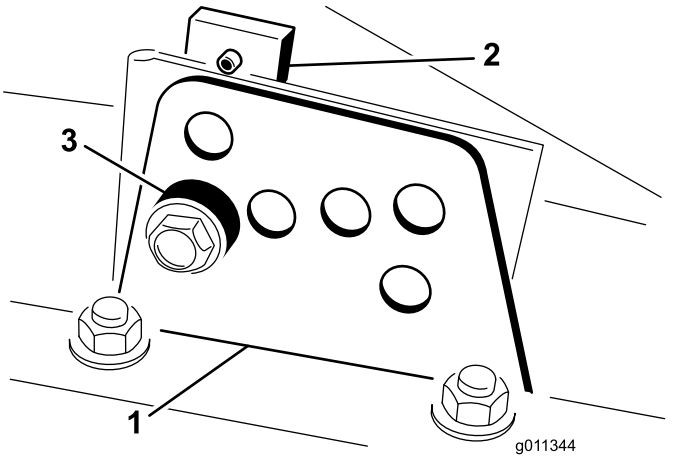

g011344

Figure 18

1. Height-of-cut bracket
2. Height-of-cut plate
3. Spacer

4. While supporting the chamber, remove the spacer (Figure 18).
5. Move the chamber to the desired height of cut and install a spacer into the designated height-of-cut hole and slot (Figure 19).

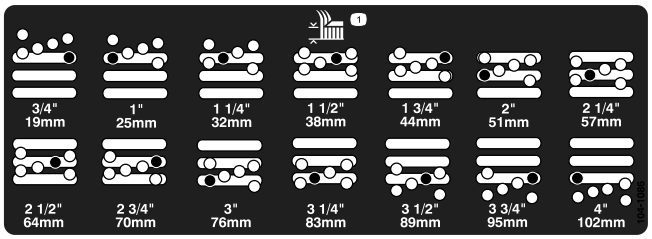

g026184

Figure 19

6. Position the tapped plate in-line with the spacer.
7. Install the bolt finger-tight.
8. Repeat steps 4 through 7 for each side adjustment.
9. Torque all 3 bolts to 41 N·m (30 ft-lb). Always tighten the front bolt first.

   Note: Adjustments of more than 3.8 cm (1-1/2 inches) may require temporary assembly to an intermediate height to prevent binding (e.g., changing from 3.1 to 7 cm (1.25 to 2.75 inches) height of cut).

Checking the Interlock Switches

Service Interval: Before each use or daily

⚠ CAUTION

If safety interlock switches are disconnected or damaged, the machine could operate unexpectedly causing personal injury.

- **Do not tamper with the interlock switches.**
- **Check the operation of the interlock switches daily and replace any damaged switches before operating the machine.**

The interlock switches are designed to stop the machine when the operator gets off the seat when the traction pedal is depressed. However, the operator may get off the seat while the engine is running and the traction pedal is in the NEUTRAL position. Although the engine continues to run if the PTO switch is disengaged and the traction pedal is released, it is strongly recommended that the engine be stopped before rising from the seat.

1. Park the machine on a level surface, lower the cutting unit, turn the key in the ignition switch to the OFF position, and engage the parking brake.
2. Press the traction pedal. Turn the key in the ignition switch to the ON position.

   Note: If the engine cranks, there is a malfunction in the interlock system. Correct this malfunction before operating the machine.
3. Turn the key in the ignition switch to the ON position, rise from the seat, and move the PTO switch to ON.

   Note: The PTO should not engage. If the PTO engages, there is a malfunction in the interlock system. Correct this malfunction before operating the machine.
4. Engage the parking brake, turn the key in the ignition switch to the ON position, and move the traction pedal out of NEUTRAL.

Note: The InfoCenter displays "traction denied" and the machine should not move. If the machine does move, there is a malfunction in the interlock system. Correct this malfunction before operating the machine.

Checking the Blade-Stopping Time

Service Interval: Before each use or daily

The blades of the cutting deck should come to a complete stop in approximately 5 seconds after you shut down the cutting deck engagement switch.

Note: Make sure that the decks are lowered onto a clean section of turf or hard surface to avoid thrown dust and debris.

To verify this stopping time, have a second person stand back from the deck at least 6 m (20 ft) and watch the blades on 1 of the cutting decks. Have the operator shut the cutting decks down and record the time it takes for the blades to come to a complete stop. If this time is greater than 7 seconds, the braking valve needs adjustment. Call your Toro Distributor for assistance in making this adjustment.

Selecting a Blade

Standard Combination Sail

This blade was designed to provide excellent lift and dispersion in almost any condition. If more or less lift and discharge velocity is required, consider a different blade.

Attributes: Excellent lift and dispersion in most conditions.

Angled Sail

The blade generally performs best in lower heights of cut—1.9 to 6.4 cm (3/4 to 2-1/2 inches).

Attributes:

- Discharge remains more even at lower heights of cut.
- Discharge has less tendency to throw left and thus a cleaner look around bunkers and fairways.
- Lower power requirement at lower heights and dense turf.

High-Lift, Parallel Sail

The blade generally performs better in the higher heights of cut—7 to 10 cm (2 to 4 inches).

Attributes:

- More lift and higher discharge velocity.
- Sparse or limp turf is picked up significantly at higher heights of cut.
- Wet or sticky clippings are discharged more efficiently reducing congestion in the deck.
- Requires more horsepower to run.
- Tends to discharge further left and can tend to windrow at lower heights of cut.

⚠ DANGER

Using the high-lift blade with the mulching baffle could cause the blade to break, resulting in personal injury or death.

Do not use the high-lift blade with the baffle.

Atomic Blade

This blade was designed to provide excellent leaf mulching.

Attributes: Excellent leaf mulching

Choosing Accessories

Optional Equipment Configurations

	Angle Sail Blade	**High-Lift, Parallel-Sail Blade** ***(Do not use with the mulching baffle)***	**Mulching Baffle**	**Roller Scraper**
Grass Cutting: 1.9 to 4.4 cm (0.75 to 1.75 inch) height of cut	Recommended in most applications	May work well in light or sparse turf	Has been shown to improve dispersion and after cut performance on northern grasses that are cut at least 3 times per week and less than 1/3 of the grass blade is removed. ***Do not use with the high-lift, parallel-sail blade***	Can be used any time that rollers buildup with grass or large flat grass clumps of grass are seen. The scrapers may actually increase clumping in certain applications.
Grass Cutting: 5 to 6.4 cm (2.00 to 2.50 inch) height of cut	Recommended for thick or lush turf	Recommended for light or sparse turf		
Grass Cutting: 7 to 10 cm (2.75 to 4.00 inch) height of cut	May work well in lush turf	Recommended in most applications		
Leaf Mulching	Recommended for use with the mulching baffle	**Not Allowed**	Use with combination sail or angle sail blade only	
Pros	Even discharge at lower height of cut Cleaner look around bunkers and fairways Lower power requirements	More lift and higher discharge velocity Sparse or limp turf is picked up at high height of cut Wet or sticky clippings are discharged efficiently	May improve dispersion and appearance in certain grass cutting applications Very good for leaf mulching	Reduces roller buildup in certain applications
Cons	Does not lift the grass well in high height of cut applications Wet or sticky grass has a tendency to buildup in the chamber, leading to poor quality of cut and higher power requirements	Requires more power to run in some applications Tends to windrow at lower height of cut in lush grass Do not use with the mulching baffle	Grass will buildup in the chamber if attempting to remove too much grass with baffle in place	

During Operation

During Operation Safety

General Safety

- The owner/user can prevent and is responsible for accidents that may cause injuries to people, or damage to property.
- Wear appropriate clothing, including eye protection; substantial, slip-resistant footwear; and hearing protection. Tie back long hair. Do not wear jewelry.
- Ensure that all drives are in the NEUTRAL position, the parking brake is engaged, and you are in the operating position before you start the engine.
- Keep all body parts, including hands and feet, away from all moving parts.
- Do not operate the machine while ill, tired, or under the influence of alcohol or drugs.
- Keep the direction of the mower discharge away from people and pets.
- Do not mow in reverse unless it is absolutely necessary. If you must mow in reverse, look behind and down for small children before and while moving the machine in reverse. Stay alert and stop the machine if a child enters the area.
- Use extreme care when approaching blind corners, shrubs, trees, or other objects that may block your view.
- Do not mow near drop-offs, ditches, or embankments. The machine could suddenly rollover if a wheel goes over the edge or if the edge caves in.
- Never carry passengers on the machine.
- Operate the machine only in good visibility and appropriate weather conditions. Do not operate the machine when there is the risk of lighting.
- Do not mow on wet grass. Reduced traction could cause the machine to slide.
- Never raise the mower deck with the blades running.
- Stop the machine and inspect the blades after striking an object or if there is an abnormal vibration in the machine. Make all necessary repairs before resuming operation.
- Stop the blades whenever you are not mowing, especially while crossing loose terrain such as gravel.
- Slow down and use caution when making turns and crossing roads and sidewalks with the machine. Always yield the right-of-way.
- Turn on the flashing warning lights on the machine whenever you travel on a public road, except where such use is prohibited by law.
- Disengage the drive to the attachment and shut off the engine before adding fuel and adjusting the height of cut.
- Reduce the throttle setting before stopping the engine and, if the engine has a fuel-shutoff valve, shut off the fuel when you have finished operating the machine.
- Never run an engine in an area where exhaust gases are enclosed.
- Never leave a running engine unattended.
- Before leaving the operating position, do the following:
  - Stop the machine on level ground.
  - Disengage the power take-off and lower the attachments.
  - Set the parking brake.
  - Shut off the engine and remove the key.
  - Wait for all moving parts to stop.
- Do not change the governor settings on or overspeed the engine. Operating the engine at excessive speed may increase the potential for personal injury.
- Do not use the machine as a towing vehicle.
- Use accessories and attachments approved by The Toro® Company only.

Rollover Protection System (ROPS) Safety

- **Do not** remove the ROPS from the machine.
- Ensure that the seat belt is attached and that you can release it quickly in the event of an emergency.
- Always wear your seat belt.
- Check carefully for overhead clearances, such as branches, doorways, and electrical wires, before driving the machine under them. Do not contact them.
- Keep the ROPS in safe operating condition by thoroughly inspecting it periodically for damage and keeping all the mounting fasteners tight.
- Replace a damaged ROPS. Do not repair or revise it.
- Any alterations to a ROPS must be approved by The Toro® Company.

Slope Safety

- Slow down the machine and use extra care on hillsides. Travel in the recommended direction on hillsides. Turf conditions can affect the stability of the machine.

- Avoid starting, stopping, or turning the machine on a slope. If the tires lose traction, disengage the blade(s) and proceed slowly straight down the slope.
- Do not turn the machine sharply. Use care when reversing the machine.
- When operating the machine on a slope, always keep all cutting units lowered.
- Avoid turning the machine on slopes. If you must turn, turn slowly and gradually downhill, if possible.
- Use extra care while operating the machine with attachments; they can affect the stability of the machine. Follow the recommendations for using the machine on a slope in this *Operator's Manual*.

Starting and Stopping the Engine

Important: **Bleed the fuel system before starting the engine if the engine has stopped due to lack of fuel, or you have performed maintenance on the fuel system.**

Starting the Engine

1. Sit on the seat, keep your foot off the traction pedal so that it is in NEUTRAL, and engage the parking brake.
2. Turn the key in the ignition switch to the RUN position. The glow indicator will light.
3. When the glow indicator dims, turn the key in the ignition switch to the START position. Release the key immediately when the engine starts and allow it to return to the RUN position. Adjust the engine speed.

   Important: **Do not run the starter motor more than 30 seconds at a time or premature starter failure may result. If the engine fails to start after 30 seconds, turn the key in the ignition switch to the OFF position, recheck the controls and procedures, wait 30 additional seconds, and repeat the starting procedure.**

   When the temperature is less than -7°C (20°F), the starter motor can be run for 30 seconds on then 60 seconds off for 2 attempts.

⚠ CAUTION

Checking the machine for oil leaks, loose parts, and other malfunctions while the engine is running may bring you in close contact with hot or moving parts of the machine, causing injury.

Shut the engine off and wait for all moving parts to stop before checking for oil leaks, loose parts, and other malfunctions.

Stopping the Engine

Important: **Allow the engine to idle for 5 minutes before shutting it off after a full load operation. This allows the turbo charger to cool down before shutting the engine off.**

Note: Lower the cutting units to the ground whenever machine is parked. This relieves the hydraulic load from the system, prevents wear on system parts and also prevents accidental lowering of the cutting units.

1. Move the PTO switch to the OFF position.
2. Set the parking brake.
3. Return the engine low idle.
4. Turn the key in the ignition switch to the OFF position and remove the key.

Cutting Grass with the Machine

Note: Cutting grass at a rate that loads the engine promotes DPF regeneration.

1. Move the machine to the job site.
2. Whenever possible, set the engine-speed switch to high idle.
3. Engage the PTO switch.
4. Gradually move the traction pedal forward and slowly drive the machine over the mowing area.
5. Once the front of the cutting units are over the mowing area, lower the cutting units.
6. Cut grass so that the blades can cut and discharge clippings at a high rate while producing a good quality of cut.

   Note: If the cutting rate is too high, the quality of cut may deteriorate. Reduce the ground speed of the machine or reduce the width of cut to regain high idle engine speed.
7. When the cutting units are over the far edge of the mowing area, lift the cutting units.
8. Perform a tear-shaped turn to quickly line up for your next pass.

Diesel Particulate Filter Regeneration

The diesel particulate filter (DPF) is part of the exhaust system. The diesel-oxidation catalyst of the DPF reduces harmful gasses and the soot filter removes soot from the engine exhaust.

The DPF regeneration process uses heat from the engine exhaust to incinerate the soot accumulated on the soot filter, converting the soot to ash, and clears the channels of the soot filter so that filtered engine exhaust flows out the DPF.

The engine computer monitors the accumulation of soot by measuring the back pressure in the DPF. If the back pressure is too high, soot is not incinerating in the soot filter through normal engine operation. To keep the DPF clear of soot, remember the following:

- Passive regeneration occurs continuously while the engine is running—run the engine at full engine speed when possible to promote DPF regeneration.
- If the back pressure is too high, the engine computer signals you through the InfoCenter when additional processes (assist and reset regeneration) are running.
- Allow the assist and reset regeneration process to complete before shutting off the engine.

Operate and maintain your machine with the function of the DPF in mind. Engine load at high idle engine speed generally produce adequate exhaust temperature for DPF regeneration.

Important: **Minimize the amount of time that you idle the engine or operate the engine at low-engine speed to help reduce the accumulation of soot in the soot filter.**

⚠ CAUTION

The exhaust temperature is hot (approximately 600°C (1112°F) during DPF parked regeneration or recovery regeneration. Hot exhaust gas can harm you or other people.

- **Never operate the engine in an enclosed area.**
- **Make sure that there are no flammable materials around the exhaust system.**
- **Never touch a hot exhaust system component.**
- **Never stand near or around the exhaust pipe of the machine.**

DPF Soot Accumulation

- Over time, the DPF accumulates soot in the soot filter. The computer for the engine monitors the soot level in the DPF.
- When enough soot accumulates, the computer informs you that it is time to regenerate the diesel particulate filter.
- DPF regeneration is a process that heats the DPF to convert the soot to ash.
- In addition to the warning messages, the computer reduces the power produced by the engine at different soot-accumulation levels.

Engine Warning Messages—Soot Accumulation

Indication Level	Fault Code	Engine Power Rating	Recommended Action
Level 1: Engine Warning	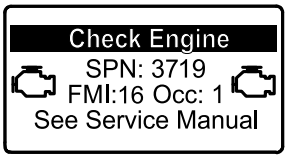 g213866 **Figure 20** Check Engine SPN 3719, FMI 16	The computer de-rates the engine power to 85%	Perform a parked regeneration as soon as possible; refer to Parked Regeneration (page 33).
Level 2: Engine Warning	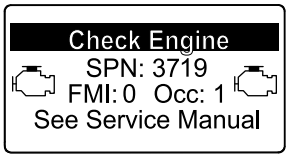 g213867 **Figure 21** Check Engine SPN 3719, FMI 0	The computer de-rates the engine power to 50%	Perform a recovery regeneration as soon as possible; refer to Recovery Regeneration (page 36).

DPF Ash Accumulation

- The lighter ash is discharged through the exhaust system; the heavier ash collects in the soot filter.
- Ash is a residue of the regeneration process. Over time, the diesel particulate filter accumulates ash that does not discharge with the engine exhaust.
- The computer for the engine calculates the amount of ash accumulated in the DPF.
- When enough ash accumulates, the engine computer sends information to the InfoCenter in the form of a system advisory or an engine fault to indicate the accumulation of ash in the DPF.
- The advisory and faults are indications that it is time to service the DPF.
- In addition to the warnings, the computer reduces the power produced by the engine at different ash-accumulation levels.

InfoCenter Advisory and Engine Warning Messages—Ash Accumulation

Indication Level	Advisory or Fault Code	Engine Speed Reduction	Engine Power Rating	Recommended Action
Level 1: System Advisory	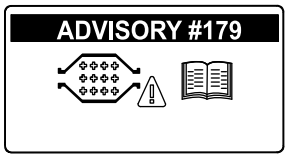 g213865 **Figure 22** Advisory #179	None	100%	Notify your service department that advisory #179 displays in the InfoCenter.
Level 2: Engine Warning	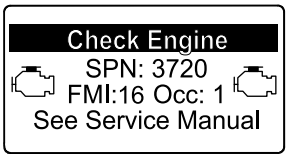 g213863 **Figure 23** Check Engine SPN 3720, FMI 16	None	The computer de-rates the engine power to 85%	Service the DPF; refer to Servicing the Diesel-Oxidation Catalyst (DOC) and the Soot Filter (page 48)
Level 3: Engine Warning	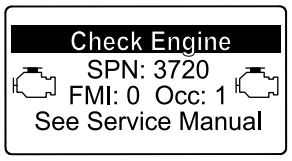 g213864 **Figure 24** Check Engine SPN 3720, FMI 0	None	The computer de-rates the engine power to 50%	Service the DPF; refer to Servicing the Diesel-Oxidation Catalyst (DOC) and the Soot Filter (page 48)
Level 4: Engine Warning	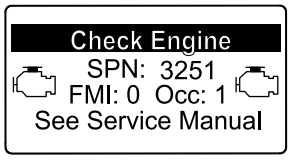 g214715 **Figure 25** Check Engine SPN 3251, FMI 0	Engine speed at max torque + 200 rpm	The computer de-rates the engine power to 50%	Service the DPF; refer to Servicing the Diesel-Oxidation Catalyst (DOC) and the Soot Filter (page 48)

Types of Diesel Particulate Filter Regeneration

Types of diesel particulate filter regeneration that are performed while the machine is operating:

Type of Regeneration	Conditions for DPF regeneration	DPF description of operation
Passive	Occurs during normal operation of the machine at high-engine speed or high-engine load	The InfoCenter does not display an icon indicating passive regeneration. During passive regeneration, the DPF processes high-heat exhaust gasses; oxidizing harmful emissions and burning soot to ash. Refer to Passive DPF Regeneration (page 32).
Assist	Occurs as a result of low-engine speed, low-engine load, or after the computer detects back pressure in the DPF	 When the assist/reset-regeneration icon is displayed in the InfoCenter, an assist regeneration is in progress. During assist regeneration, the computer controls the intake throttle to increase the exhaust temperature, enabling assist regeneration to occur. Refer to Assist DPF Regeneration (page 32).
Reset	Occurs after assist regeneration only if the computer detects that assist regeneration did not sufficiently reduce the soot level Also occurs every 100 hours to reset baseline sensor readings	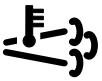 When the assist/reset-regeneration icon is displayed in the InfoCenter, a regeneration is in progress. During reset regeneration, the computer controls the intake throttle and fuel injectors to increase the exhaust temperature during regeneration. Refer to Reset Regeneration (page 33).

Types of diesel particulate filter regeneration that require you to park the machine:

Type of Regeneration	Conditions for DPF regeneration	DPF description of operation
Parked	Soot buildup occurs as a result of prolonged operation at low-engine speed or low-engine load. May also occur as a result of using incorrect fuel or oil The computer detects back pressure due to soot buildup and requests a parked regeneration	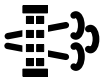 When the parked-regeneration icon is displayed in the InfoCenter, a regeneration is requested. • Perform the parked regeneration as soon as possible to avoid needing a recovery regeneration. • A parked regeneration requires 30 to 60 minutes to complete. • You must have at least a 1/4 tank of fuel in the tank. • You must park the machine to perform a recovery regeneration. Refer to Parked Regeneration (page 33).

Types of diesel particulate filter regeneration that require you to park the machine: (cont'd.)

Type of Regeneration	Conditions for DPF regeneration	DPF description of operation
Recovery	Occurs as a result of ignoring parked regeneration requests and continuing operation, adding more soot when the DPF is already in need of a parked regeneration	When the recovery-regeneration icon 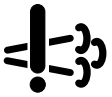 is displayed in the InfoCenter, a recovery regeneration is requested. Contact your Authorized Toro Distributor to have a service technician perform the recovery regeneration. • A recovery regeneration requires up to 4 hours to complete. • You must have at least a 1/2 tank of fuel in the machine. • You must park the machine to perform a recovery regeneration. Refer to Recovery Regeneration (page 36).

Passive DPF Regeneration

- Passive regeneration occurs as part of normal engine operation.
- While operating the machine, run the engine at full-engine speed when possible to promote DPF regeneration.

Assist DPF Regeneration

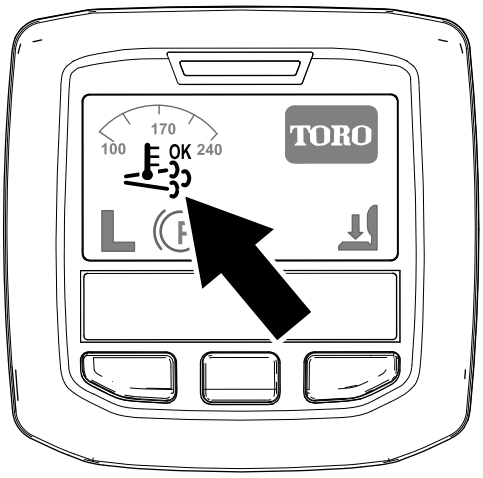

g214711

Figure 26
Assist/reset-regeneration icon

- The assist/reset-regeneration icon displays in the InfoCenter (Figure 26).
- The computer takes control of the intake throttle to increase the temperature of the engine exhaust.
- While operating the machine, run the engine at full engine speed when possible to promote DPF regeneration.
- The 

icon displays in the InfoCenter while the assist regeneration is processing.
- Whenever possible, do not shut off the engine or reduce engine speed while the assist regeneration is processing.

Important: **Allow the machine to complete the assist regeneration process before shutting off the engine.**

Note: The assist regeneration is finished processing when the 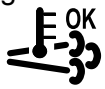

icon disappears from the InfoCenter.

Reset Regeneration

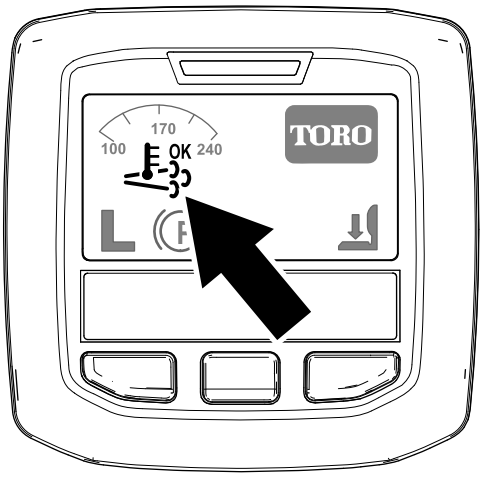

g214711

Figure 27
Assist/reset-regeneration icon

- The assist/reset-regeneration icon displays in the InfoCenter (Figure 27).
- The computer takes control of the intake throttle and changes the fuel injection operation to increase the temperature of the engine exhaust.

  Important: **The assist/reset-regeneration icon indicates that the exhaust temperature discharged from of your machine may be hotter than during regular operation.**
- While operating the machine, run the engine at full engine speed when possible to promote DPF regeneration.
- The 

icon displays in the InfoCenter while the reset regeneration is processing.
- Whenever possible, do not shut off the engine or reduce engine speed while the reset regeneration is processing.

  Important: **Allow the machine to complete the reset regeneration process before shutting off the engine.**

  Note: The reset regeneration is finished processing when the 

icon disappears from the InfoCenter.

Parked Regeneration

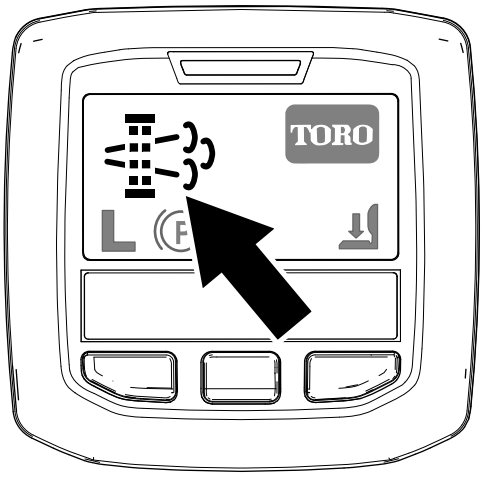

g214713

Figure 28
Parked-regeneration request icon

- The parked-regeneration requested icon displays in the InfoCenter (Figure 28).
- If a parked regeneration is needed, the InfoCenter displays engine warning SPN 3719, FMI 16 (Figure 29) and the engine computer derates engine power to 85%.

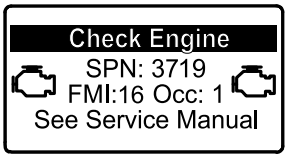

g213866

Figure 29

Important: **If you do not complete a parked regeneration within 2 hours, the engine computer derates engine power to 50%.**

- A parked regeneration requires 30 to 60 minutes to complete.
- If you are authorized by your company, you need the PIN code to perform the parked-regeneration process.

Preparing to Perform a Parked or Recovery Regeneration

1. Ensure that the machine has at least 1/4 tank of fuel.
2. Move the machine outside to an area away from combustible materials.
3. Park the machine on a level surface.
4. Ensure that the traction control or motion-control levers are in the NEUTRAL position.
5. If applicable, lower the cutting units and shut them off.

6. Engage the parking brake.
7. Set the throttle to the low IDLE position.

Performing a Parked Regeneration

Note: For instructions on unlocking protected menus, refer to Accessing Protected Menus (page 18).

1. Access the protected menu and unlock the protected settings submenu (Figure 30); refer to Accessing Protected Menus (page 18).

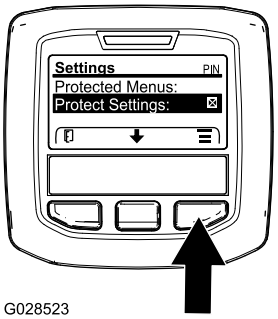

g028523

Figure 30

2. Navigate to the MAIN MENU, press the center button to scroll down to the SERVICE MENU, and press the right button to select the SERVICE option (Figure 31).

   Note: The InfoCenter should display the PIN indicator in the upper right corner of the display.

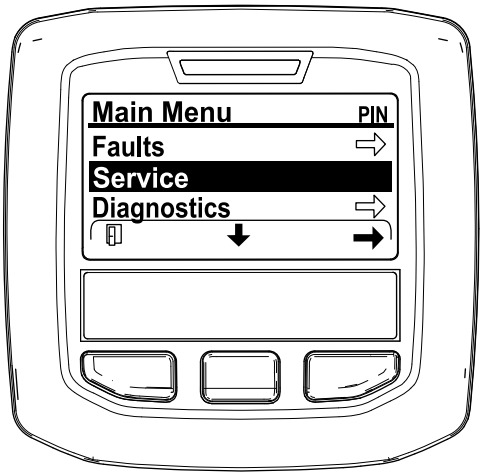

g212371

Figure 31

3. In the SERVICE MENU, press the middle button until the DPF REGENERATION options displays, and press the right button to select the DPF REGENERATION option (Figure 32).

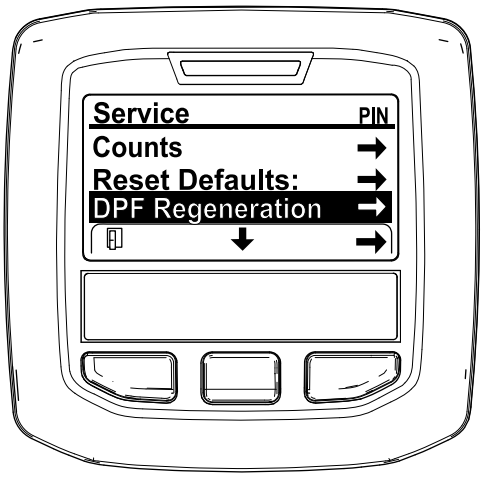

g212138

Figure 32

4. When the “Initiate DPF Regen. Are you sure?” message displays, press the center button (Figure 33).

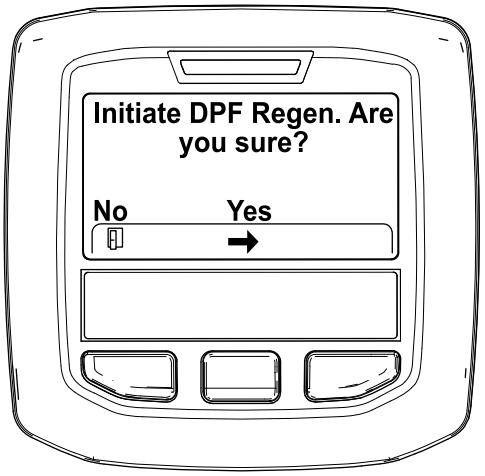

g212125

Figure 33

5. If the coolant temperature is below 60°C (140°F) the “Insure is running and above 60C/140F” message displays. (Figure 34).

   Observe the temperature in the display, and run the machine at full throttle until the temperature reaches 60°C (140°F), then press the center button.

   Note: If the coolant temperature is above 60°C (140°F) this screen is skipped.



g211986

Figure 34

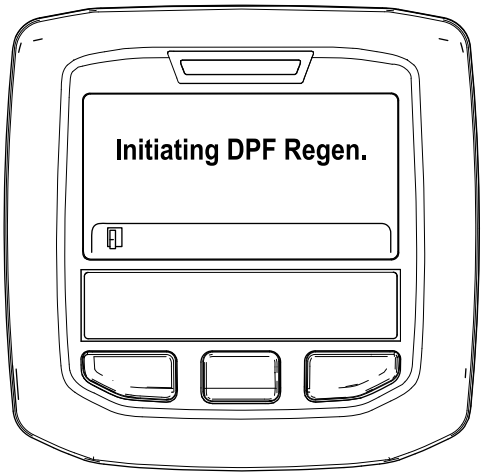

g212405

Figure 36

6. Move the throttle control to LOW IDLE and press the center button (Figure 35).

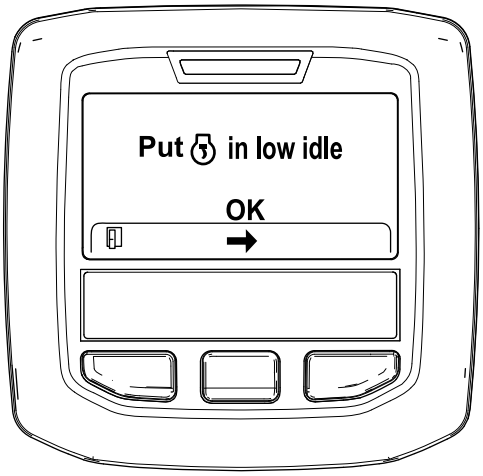

g212372

Figure 35

7. The following messages display as the parked regeneration process begins:
   A. The “Initiating DPF Regen.” message displays (Figure 36).
   B. The “Waiting on ” message displays (Figure 37).



g212406

Figure 37

   C. The computer determines whether the regeneration runs. One of the following messages displays in the InfoCenter:
      - If the regeneration is allowed, the “Regen Initiated. Allow up to 30 minutes for completion” message displays in the InfoCenter, wait for the machine to complete the parked regeneration process (Figure 38).

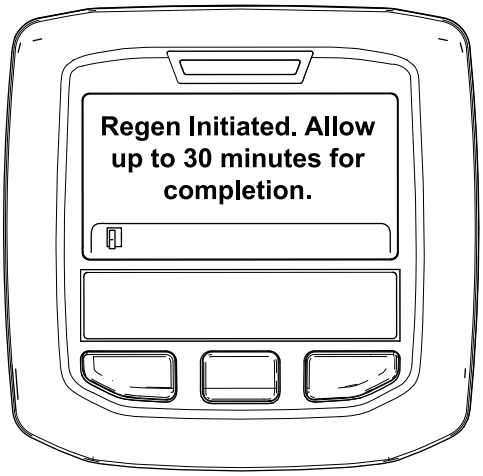

g213424

Figure 38

- If the regeneration process is not allowed by the engine computer, the “DPF Regen Not Allowed” message displays in the InfoCenter (Figure 39). Press the left button to exit to the home screen

  Important: **If you did not meet all the requirements for regeneration or if less than 50 hours have passed since the last regeneration, the “DPF Regen Not Allowed” message appears.**

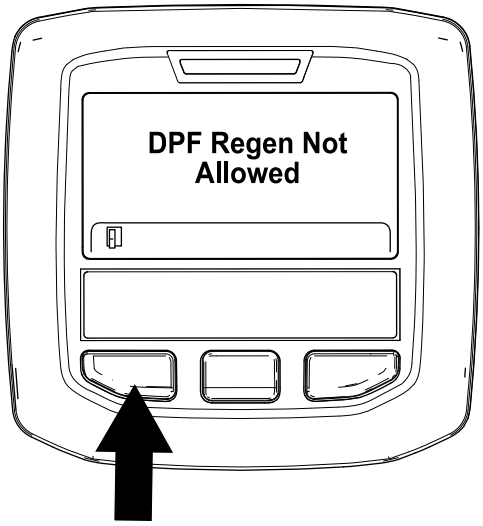

g212410

Figure 39

8. While the regeneration is running, the InfoCenter returns to the home screen and shows the following icons:



The engine is cold—wait.



The engine is warm—wait.



The engine hot—regeneration in progress (percent complete).

9. The parked regeneration is complete when the “Regen Complete” message displays in the InfoCenter. Press the left button to exit to the home screen (Figure 40).

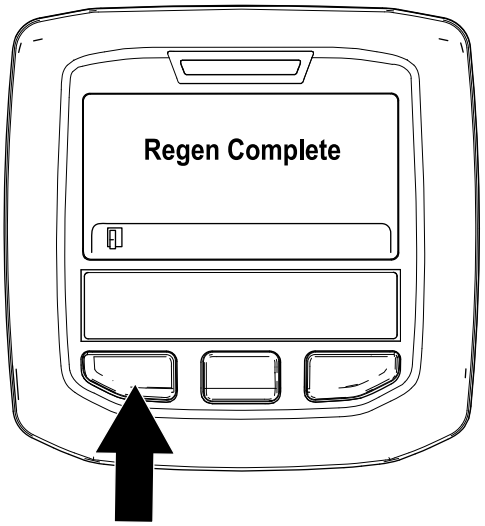

g212404

Figure 40

Recovery Regeneration

- If you ignore the request for a parked regeneration (displayed in the InfoCenter) and continue to operate the machine, a critical amount of soot builds up in the DPF.
- If a recovery regeneration is needed, the InfoCenter displays engine warning SPN 3719, FMI 16 (Figure 41) and the engine computer derates engine power to 85%.

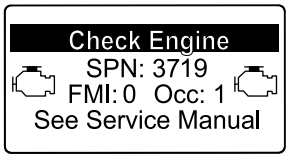

g213867

Figure 41

Important: **If you do not complete a recovery regeneration within 15 minutes, the engine computer derates engine power to 50%.**

- Perform a recovery-regeneration whenever there is a loss of engine power and a parked regeneration cannot effectively clean the DPF of soot.
- A recovery regeneration requires up to 4 hours to complete.
- You need a distributor technician to perform the recovery regeneration process; contact your Authorized Toro Distributor.

Understanding the Operating Characteristics of the Machine

Practice driving the machine because it has a hydrostatic transmission and its characteristics are different than many turf maintenance machines. Some points to consider when operating the traction unit and cutting units are the transmission, engine speed, load on the cutting blades and the importance of the brakes.

With Toro Smart Power™, the operator does not have to listen to the engine speed in heavy conditions. Smart Power prevents bogging down in heavy turf by automatically controlling the machine speed and optimizing cutting performance.

Another characteristic to consider is the operation of the pedals that are connected to the brakes. The brakes can be used to assist in turning the machine. However, use them carefully, especially on soft or wet grass because the turf may be torn accidentally. Another benefit of the brakes is to maintain traction. For example, in some slope conditions, the uphill wheel slips and loses traction. If this situation occurs, depress the uphill turn pedal gradually and intermittently until the uphill wheel stops slipping, thus, increasing traction on the downhill wheel.

Use extra care when operating the machine on slopes. Make sure that the seat latch is properly secured and the seat belt is buckled. Drive slowly and avoid sharp turns on slopes to prevent rollovers. For steering control, the cutting unit must be lowered when going downhill.

Important: **Allow engine to idle for 5 minutes before shutting it off after a full load operation. This allows the turbo charger to cool down before shutting the engine off. Failure to do so may lead to turbo-charger trouble.**

Before stopping the engine, disengage all controls and set the engine speed to Slow. Setting the engine speed to Slow reduces high engine rpm, noise, and vibration. Turn the key in the ignition switch to the OFF position to shut off the engine.

Operating the Engine-Cooling Fan

The engine-cooling-fan switch has 2 positions for controlling the operation of the fan. The 2 positions are R and AUTO. The fan has the ability to reverse to blow debris off the rear screen. Under normal operating conditions, the switch should be in the AUTO position. In Auto, the fan speed will be controlled by the coolant or hydraulic-oil temperature and will automatically reverse to blow debris off the rear screen. A reverse cycle is automatically initiated when either the coolant or hydraulic-oil temperature reaches a certain point. By pressing the fan switch forward into the R position, the fan will complete a manually initiated reverse cycle. It is recommended to reverse the fan when the rear screen is clogged or prior to entering the shop or the storage area.

Operating Tips

Mowing When Grass Is Dry

Mow either in the late morning to avoid the dew, which causes grass clumping, or in late afternoon to avoid the damage caused by direct sunlight on the sensitive, freshly mowed grass.

Selecting the Proper Height of Cut

Remove approximately 25 mm (1 inch) or no more than 1/3 of the grass blade when cutting. In exceptionally lush and dense grass, you may have to raise the height of cut to the next setting.

Mowing at Proper Intervals

Under most normal conditions, you will need to mow approximately every 4 to 5 days. But remember, grass grows at different rates at different times. This means that in order to maintain the same height of cut, which is a good practice, you will need to cut more frequently in early spring; as the grass growth rate slows in midsummer, cut only every 8 to 10 days. If you are unable to mow for an extended period due to weather conditions or other reasons, mow first with the height of cut at a high level; then mow again 2 to 3 days later with a lower-height setting.

Mowing with Sharp Blades

A sharp blade cuts cleanly and without tearing or shredding the grass blades like a dull blade. Tearing and shredding causes the grass to turn brown at the edges which impairs growth and increases susceptibility to diseases.

Changing Mowing Patterns

Change mowing patterns often to minimize after-cut appearance issues induced by repetitive operation in only 1 direction.

Adjusting the Counterbalance

The counterbalance system maintains hydraulic back pressure on the deck lift cylinders. This counterbalance pressure transfers cutting deck weight to the mower's drive wheels to improve traction. The counterbalance pressure has been factory set to an optimal balance of after-cut appearance and traction capability in most turf conditions. Decreasing the counterbalance setting can produce a more stable cutting deck, but can decrease the traction capability. Increasing the counterbalance setting can increase the traction capability, but may result in after-cut appearance issues. Reference the *Service Manual* for your traction unit for instructions to adjust counterbalance pressure.

Resolving Aftercut Appearance

Reference Aftercut Appearance Troubleshooting Guide available at www.Toro.com.

Transporting the Machine

Lock the brake pedals together with the pedal-locking latch while transporting the machine.

Using the Transport Latches

Model No. 30882

Use the 2 rear-transport latches for the No. 6 and 7 mower decks when moving the machine over long distances, rough terrain, when transporting, or storing the machine.

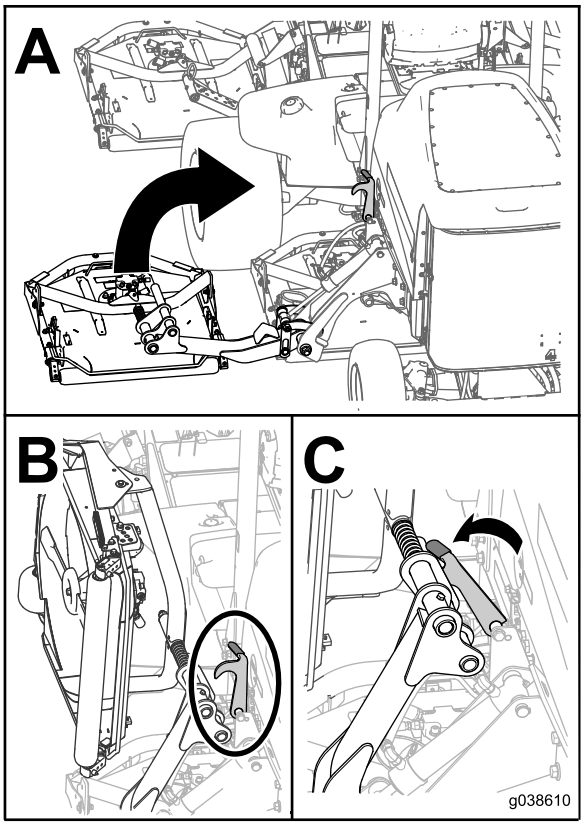

g038610

Figure 42

Cleaning and Parking the Machine After Each Use

To ensure optimum performance, clean the underside of the mower housings after each use. If residue is allowed to buildup in the mower housing, cutting performance will decline.

Note: Lower the cutting units to the ground whenever the machine is parked. This relieves the hydraulic load from the system, prevents wear on system parts, and also prevents accidental lowering of the cutting units.

After Operation

After Operation Safety

General Safety

- Clean grass and debris from the cutting units, drives, mufflers, and engine to help prevent fires. Clean up oil or fuel spills.
- Shut off the fuel while storing or transporting the machine.
- Disengage the drive to the attachment whenever you are transporting or not using the machine.
- Allow the engine to cool before storing the machine in any enclosure.
- Never store the machine or fuel container where there is an open flame, spark, or pilot light, such as on a water heater or on other appliances.

Towing Safety

- Tow only with a machine that has a hitch designed for towing. Do not attach towed equipment except at the hitch point.
- Follow the manufacturer's recommendation for weight limits for towed equipment and towing on slopes. On slopes, the weight of the towed equipment may cause loss of traction and loss of control.
- Never allow children or others in or on towed equipment.
- Travel slowly and allow extra distance to stop when towing.

Jacking Points

Note: Always use jack stands. Do not rely on a jack or hoist to hold the machine.

- Front— frame, on the inside of each drive tire.
- Rear— center of the axle.

Tie Downs

- Use properly rated DOT approved straps in four corners to tie down machine.
- On each side of the frame by the operator's seat.
- On the rear bumper.

Pushing or Towing the Machine

In an emergency, the machine can be moved forward by actuating the bypass valve in the variable displacement hydraulic pump and pushing or towing the machine.

Important: **Do not push or tow the machine faster than 3 to 4.8 km/h (2 to 3 mph) because internal transmission damage may occur. The bypass valve must be open whenever you push or tow the machine.**

Important: **If you must push or tow the machine in reverse, the check valve in the four-wheel drive manifold must also be bypassed. To bypass the check valve, connect a hose assembly (Part No. 95-8843), 2 coupler fittings (Part No. 95-0985), and 2 hydraulic fittings (Part No. 340-77) to the reverse-traction, pressure test port, located on the hydrostat, and on the port located in-between ports M8 and P2 on the rear traction manifold which is located to the inside of the front rear tire.**

1. Open the hood and locate the bypass valves (Figure 43) on the top of pump, behind the battery/storage boxes.
2. Rotate each valve 3 turns counter-clockwise to open and allow oil to bypass internally. **Do not open more than 3 turns.** Because fluid is bypassed, the machine can be slowly moved without damaging the transmission.

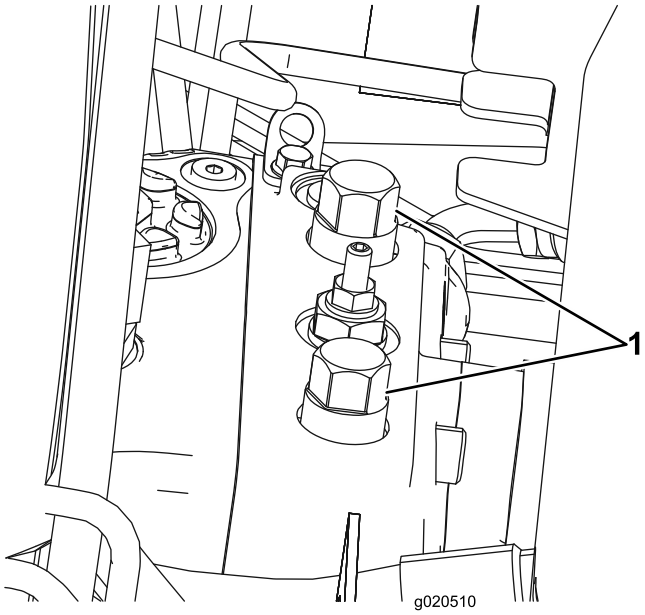

g020510

Figure 43

1. Bypass valve (2)

3. Close the bypass valves before starting the engine. Torque to 70 N-m (52 ft-lb) to close the valve.

Hauling the Machine

- Use care when loading or unloading the machine into a trailer or a truck.
- Use full-width ramps for loading the machine into a trailer or a truck.
- Tie the machine down securely using straps, chains, cable, or ropes. Both front and rear straps should be directed down and outward from the machine.

Maintenance

Note: Determine the left and right sides of the machine from the normal operating position.

Note: Download a free copy of the electrical or hydraulic schematic by visiting www.Toro.com and searching for your machine from the Manuals link on the home page.

Recommended Maintenance Schedule(s)

Maintenance Service Interval	Maintenance Procedure
After the first 8 hours	• Torque the wheel nuts.
After the first 200 hours	• Change the planetary gear drive oil. • Change the rear axle lubricant. • Change the hydraulic filters.
Before each use or daily	• Check the tire pressure. • Check the interlock switches. • Check the blade stopping time. • Check the engine-oil level. • Drain water or other contaminants from the water separator. • Drain water or other contaminants from the fuel filter/water separator. • Check the cooling system. • Remove debris from the engine area, oil cooler, and radiator. • Check the hydraulic-fluid level. • Inspect the hydraulic lines and hoses for leaks, kinked lines, loose mounting supports, wear, loose fittings, weather deterioration, and chemical deterioration.
Every 50 hours	• Grease the bearings and bushings (or after every washing). • Check the battery condition.
Every 100 hours	• Check the condition and tension of the alternator belt.
Every 200 hours	• Torque the wheel nuts.
Every 250 hours	• Change the engine oil and filter.
Every 400 hours	• Service the air cleaner (earlier if the air cleaner indicator shows red, and more frequently in extremely dirty or dusty conditions). • Inspect the fuel lines and connections. • Replace the fuel-filter canister. • Replace the engine fuel filter. • Check for end-play in the planetary drives. • Check the planetary gear drive oil level (Also, check if external leakage is observed). • Check the rear axle lubricant level. • Check the rear axle gear box lubricant.
Every 800 hours	• Drain and clean the fuel tank. • Change the planetary gear drive oil (or yearly, whichever comes first). • Change the rear axle lubricant. • Check the rear wheel toe-in. • Change the hydraulic fluid. • Change the hydraulic filters.
Every 6,000 hours	• Disassemble, clean, and assemble the soot filter of the DPF. or clean the soot filter if engine faults SPN 3720 FMI 16, SPN 3720 FMI 0, or SPN 3720 FMI 16 display in the InfoCenter.

Maintenance Service Interval	Maintenance Procedure
Before storage	• Drain and clean the fuel tank. • Check the tire pressure. • Check all fasteners. • Grease or oil all grease fittings and pivot points. • Paint chipped surfaces.
Yearly	• Inspect the fuel lines and connections.

Important: **Refer to your *Engine Operator's Manual* and *Cutting Unit Operator's Manual* for additional maintenance procedures.**

Daily Maintenance Checklist

Duplicate this page for routine use.

Maintenance Check Item	For the week of:						
	Mon.	Tues.	Wed.	Thurs.	Fri.	Sat.	Sun.
Check the safety interlock operation.							
Check the brake operation.							
Check the engine oil and fuel level.							
Check the cooling system fluid level.							
Drain the water/fuel separator.							
Check the air filter restriction indicator.							
Check the radiator, oil cooler, and screen for debris.							
Check unusual engine noises.[1]							
Check unusual operating noises.							
Check the hydraulic system oil level.							
Check hydraulic hoses for damage.							
Check for fluid leaks.							
Check the tire pressure.							
Check the instrument operation.							

Maintenance Check Item	For the week of:						
	Mon.	Tues.	Wed.	Thurs.	Fri.	Sat.	Sun.
Lubricate all grease fittings.[2]							
Check the height-of-cut adjustment.							
Touch-up damaged paint.							

1. Check the glow plug and injector nozzles if hard starting, excess smoke, or rough running is noted.
2. Immediately after every washing, regardless of the interval listed.

Service Interval Chart

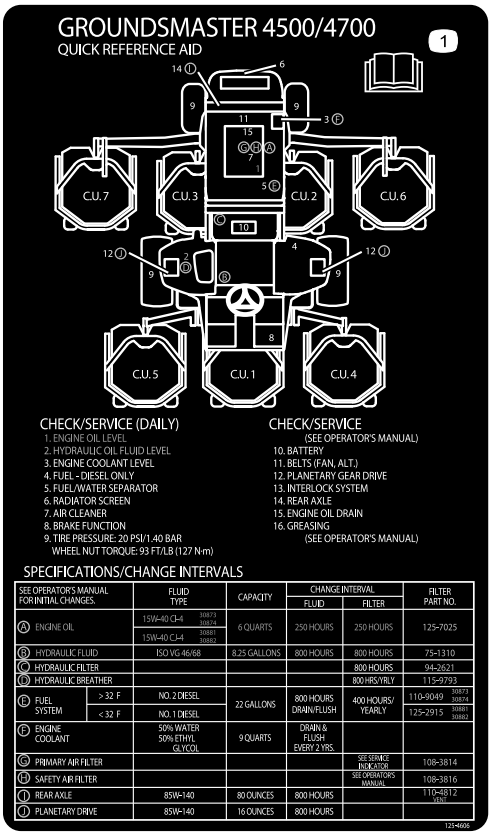

decal125-4606

Figure 44

⚠ CAUTION

If you leave the key in the ignition switch, someone could accidently start the engine and seriously injure you or other bystanders.

Remove the key from the ignition switch before you perform any maintenance.

Pre-Maintenance Procedures

Removing the Hood

1. Release the hood latches (Figure 45) and pivot open the hood.

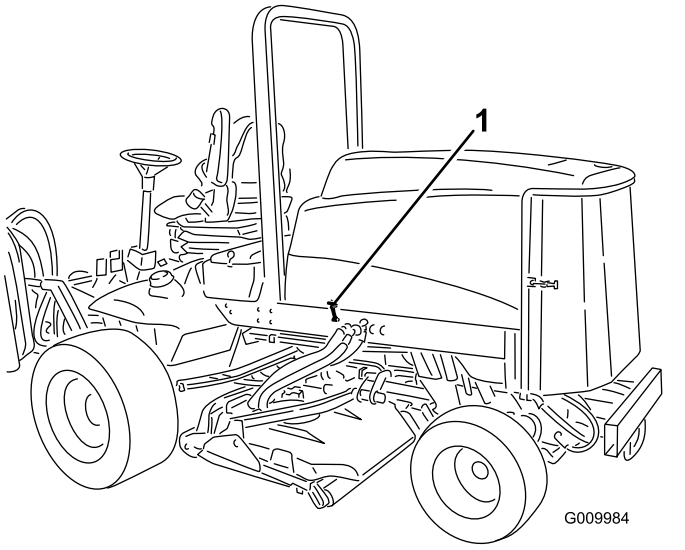

Figure 45

1. Hood latch (2)

2. Remove the cotter pins securing the rear hood brackets to the frame pins and lift off the hood.

Lubrication

Greasing the Bearings and Bushings

Service Interval: Every 50 hours (or after every washing).

The machine has grease fittings that must be lubricated regularly with No. 2 lithium grease.

The grease fitting locations and quantities are as follows:

- Brake-shaft pivot bearings (5) (Figure 46)

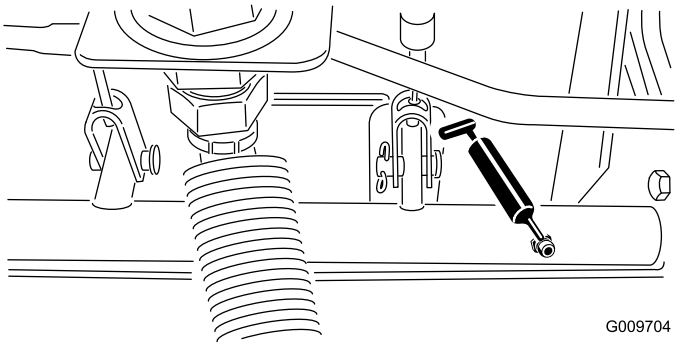

Figure 46

- Rear axle pivot bushings (2) (Figure 47)

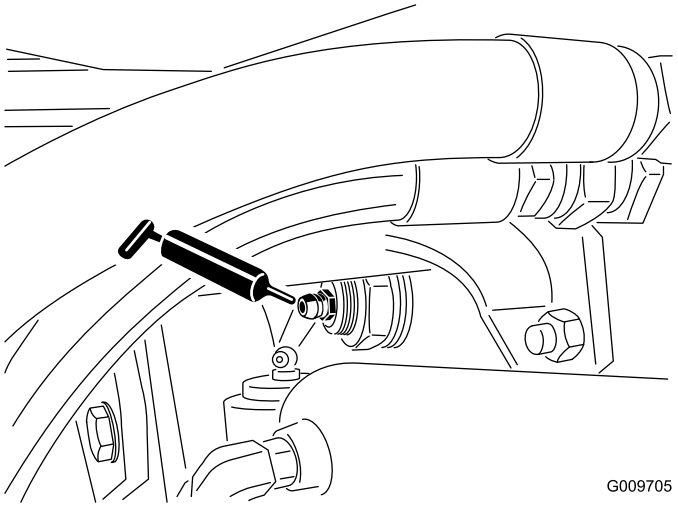

Figure 47

- Steering cylinder ball joints (2) (Figure 48)

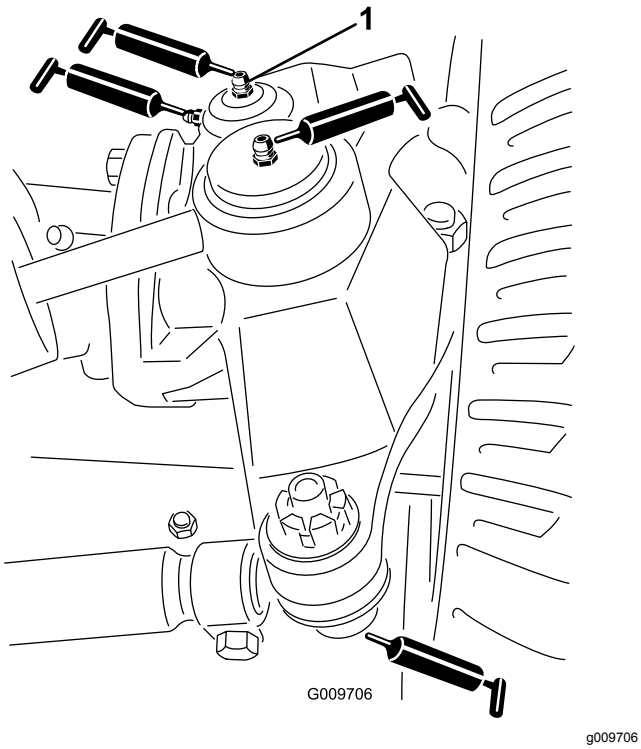

Figure 48

1. Top fitting on king pin

- Tie-rod ball joints (2) (Figure 48)
- King-pin bushings (2) (Figure 48). **The top fitting on the king pin should only be lubricated annually (2 pumps).**
- Lift-arm bushings (1 per deck) (Figure 49)

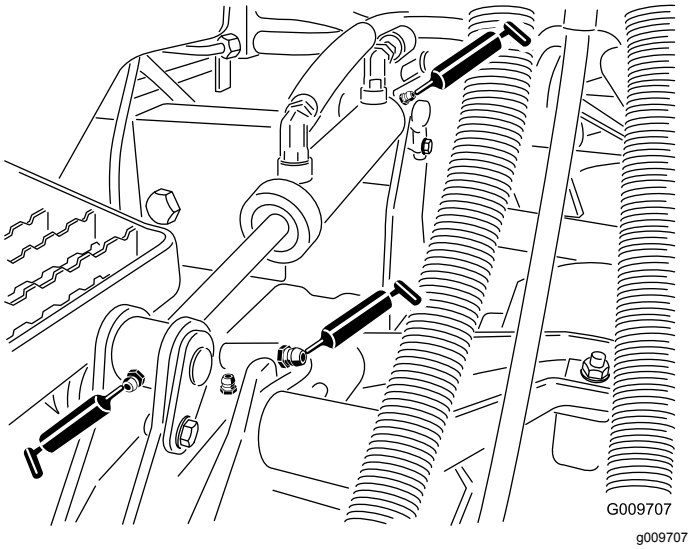

Figure 49

- Lift-cylinder bushings (2 per deck) (Figure 49)
- Cutting unit spindle-shaft bearings (2 per cutting unit) (Figure 50)

  Note: You can use either fitting, whichever is more accessible. Pump grease into the fitting until a small amount appears at bottom of the spindle housing (under the deck).

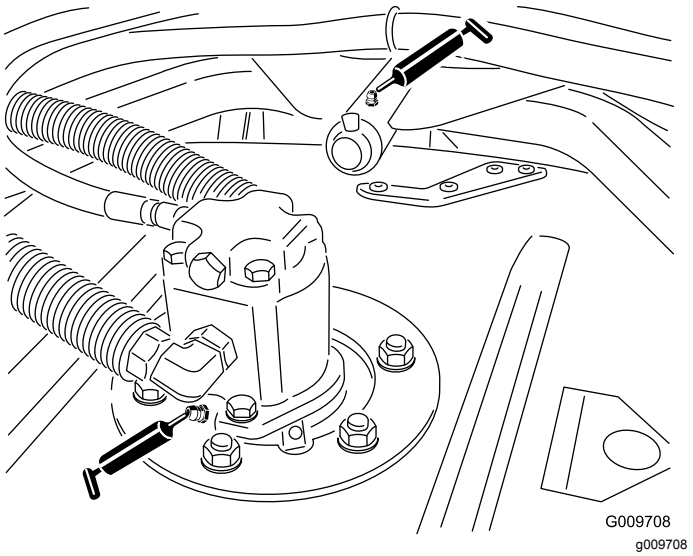

Figure 50

- Cutting unit carrier-arm bushings (1 per cutting unit) (Figure 50)
- Rear roller bearings (2 per cutting unit) (Figure 51)

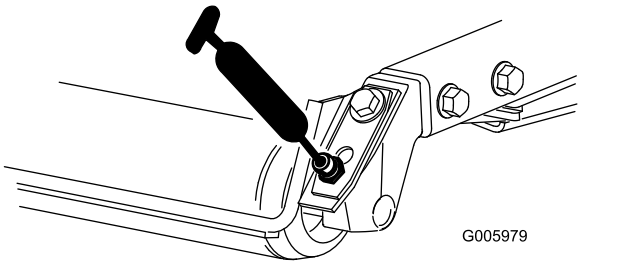

Figure 51

Important: **Make sure that the grease groove in each roller mount aligns with the grease hole in each end of the roller shaft. To help align the groove and hole, there is also an alignment mark on 1 end of the roller shaft.**

Engine Maintenance

Engine Safety

Shut off the engine before checking the oil or adding oil to the crankcase.

Servicing the Air Cleaner

Service Interval: Every 400 hours

Check the air-cleaner body for damage that could cause an air leak. Replace it if it is damaged. Check the whole intake system for leaks, damage, or loose hose clamps.

Service the air-cleaner filter only when the service indicator (Figure 52) requires it. Changing the air filter before it is necessary only increases the chance of dirt entering the engine when you remove the filter.

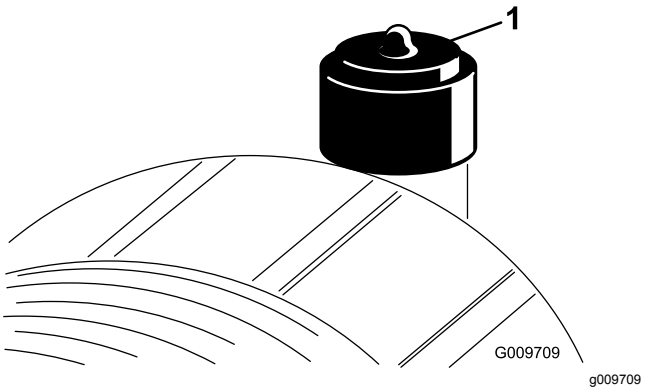

Figure 52

1. Air-cleaner indicator

Important: **Be sure that the cover is seated correctly and seals with the air-cleaner body.**

1. Replace the air cleaner (Figure 53).

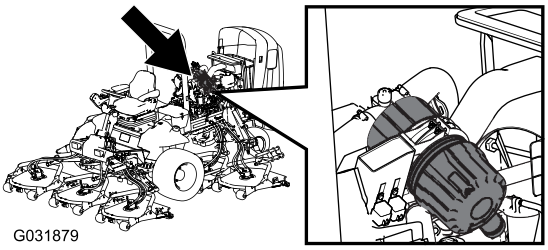

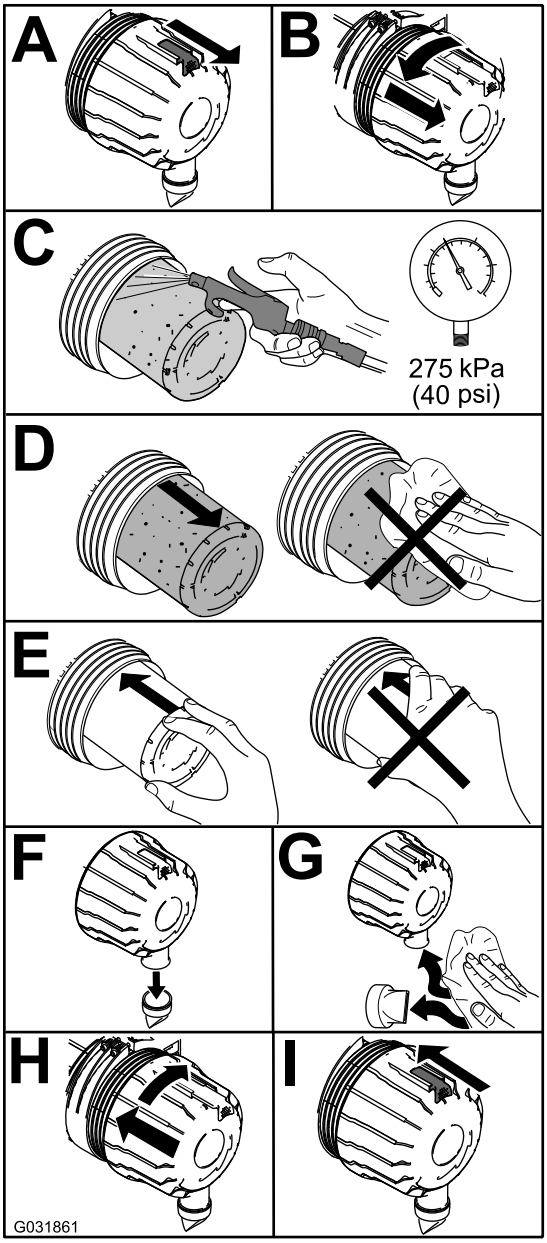

Figure 53

Note: Cleaning the used element is not recommended due to the possibility of damage to the filter media.

Important: **Never attempt to clean the safety filter. Replace the safety filter after every 3 primary filter services.**

2. Reset the indicator (Figure 52) if it shows red.

Servicing the Engine Oil

Oil Specification

Use high-quality, low-ash engine oil that meets or exceeds the following specifications:

- API service category CJ-4 or higher
- ACEA service category E6
- JASO service category DH-2

Important: **Using engine oil other than API CJ-4 or higher, ACEA E6, or JASO DH-2 may cause the diesel particulate filter to plug or cause engine damage.**

Use the following engine oil viscosity grade:

- Preferred oil: SAE 15W-40 (above 0°F)
- Alternate oil: SAE 10W-30 or 5W-30 (all temperatures)

Toro Premium Engine Oil is available from your Authorized Toro Distributor in either 15W-40 or 10W-30 viscosity grades. See the parts catalog for part numbers.

Checking the Engine-Oil Level

Service Interval: Before each use or daily

The engine is shipped with oil in the crankcase; however, the oil level must be checked before and after the engine is first started.

Important: **Check the engine oil daily. If the engine-oil level is above the Full mark on the dipstick, the engine oil may be diluted with fuel; If the engine oil level is above the Full mark, change the engine oil.**

The best time to check the engine oil is when the engine is cool before it has been started for the day. If it has already been run, allow the oil to drain back down to the sump for at least 10 minutes before checking. If the oil level is at or below the Add mark on the dipstick, add oil to bring the oil level to the Full mark. **Do not overfill the engine with oil**.

Important: **Keep the engine oil level between the upper and lower limits on the dipstick; the engine may fail if you run it with too much or too little oil.**

1. Park the machine on a level surface.
2. Check the engine-oil level (Figure 54).

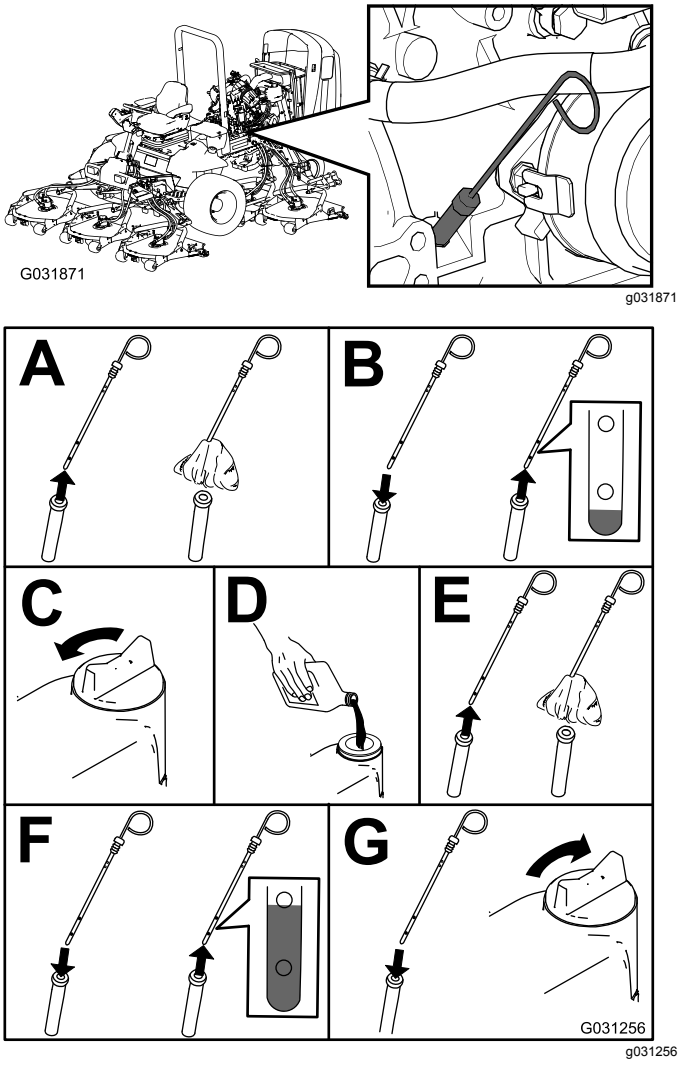

Figure 54

Note: When using different oil, drain all old oil from the crankcase before adding new oil.

Crankcase Oil Capacity

Approximately 5.7 L (6 US qt) with the filter.

Changing the Engine Oil and Filter

Service Interval: Every 250 hours

1. Start the engine and let it run 5 minutes to allow the oil to warm up.
2. With the machine parked on a level surface, shut off the engine, remove the key, and wait for all moving parts to stop before leaving the operating position.
3. Replace the engine oil and filter (Figure 55).

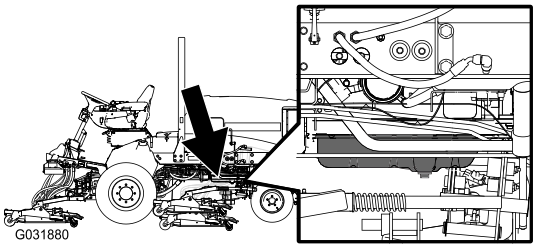

g031880

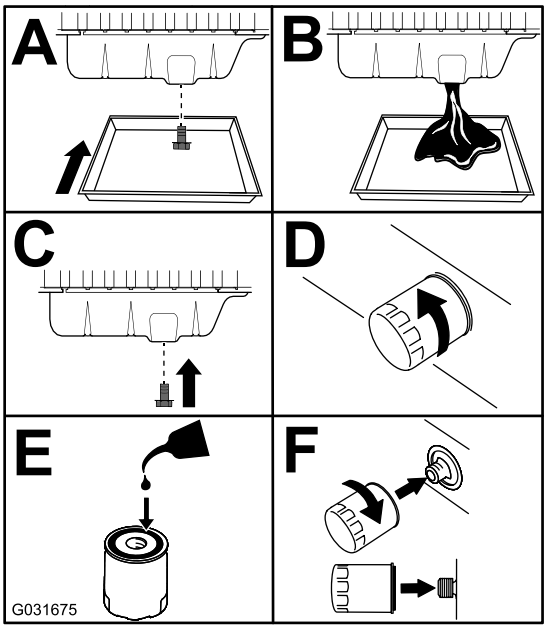

g031675

Figure 55

4. Add oil to the crankcase; refer to Checking the Engine-Oil Level (page 47).

Servicing the Diesel-Oxidation Catalyst (DOC) and the Soot Filter

Service Interval: Every 6,000 hours or clean the soot filter if engine faults SPN 3720 FMI 16, SPN 3720 FMI 0, or SPN 3720 FMI 16 display in the InfoCenter.

- If advisory message ADVISORY 179 displays in the InfoCenter, the DPF is nearing the recommended point for servicing the diesel-oxidation catalyst and the soot filter.

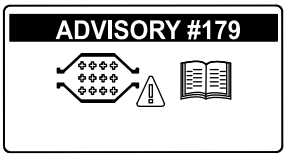

g213865

Figure 56

- If engine faults CHECK ENGINE SPN 3251 FMI 0, CHECK ENGINE SPN 3720 FMI 0, or CHECK ENGINE SPN 3720 FMI 16in the InfoCenter (Figure 57) display in the InfoCenter, clean the soot filter using the steps that follow:

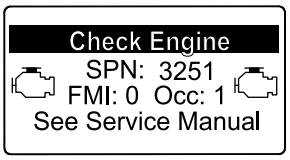

g214715

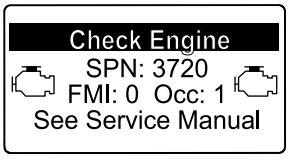

g213864

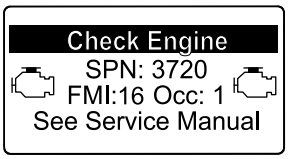

g213863

Figure 57

1. Refer to the Engine section in the *Service Manual* for information on disassembling and assembling the diesel-oxidation catalyst and the soot filter of the DPF.
2. Refer to your Authorized Toro Distributor for diesel-oxidation catalyst and the soot filter replacement parts or service.
3. Contact your Authorized Toro Distributor to have them reset the engine ECU after you install a clean DPF.

Fuel System Maintenance

⚠ DANGER

Under certain conditions, diesel fuel and fuel vapors are highly flammable and explosive. A fire or explosion from fuel can burn you and others and can cause property damage.

- **Use a funnel to fill the fuel tank outdoors, in an open area, when the engine is off and is cold. Wipe up any fuel that spills.**
- **Do not fill the fuel tank completely full. Add fuel to the fuel tank until the level is 6 to 13 mm (1/4 to 1/2 inch) below the bottom of the filler neck. This empty space in the tank allows the fuel to expand.**
- **Never smoke when handling fuel, and stay away from an open flame or where fuel fumes may be ignited by a spark.**
- **Store fuel in a clean, safety-approved container and keep the cap in place.**

Draining the Fuel Tank

Service Interval: Every 800 hours—Drain and clean the fuel tank.

Before storage—Drain and clean the fuel tank.

Drain and clean the tank if fuel system becomes contaminated or if the machine will be stored for an extended period of time. Use clean fuel to flush out the tank.

Inspecting the Fuel Lines and Connections

Service Interval: Every 400 hours

Yearly

Inspect the fuel lines and connections for deterioration, damage, or loose connections.

Servicing the Water Separator

Service Interval: Before each use or daily—Drain water or other contaminants from the fuel filter/water separator.

Every 400 hours—Replace the fuel-filter canister.

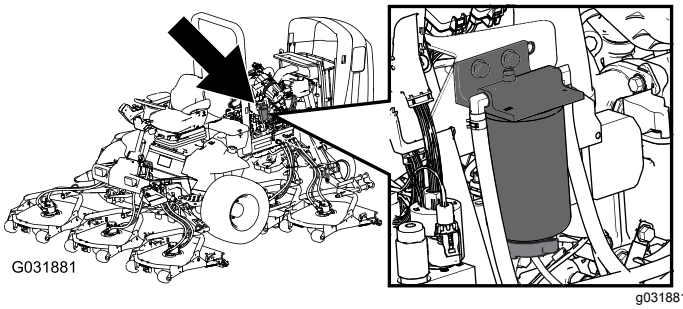

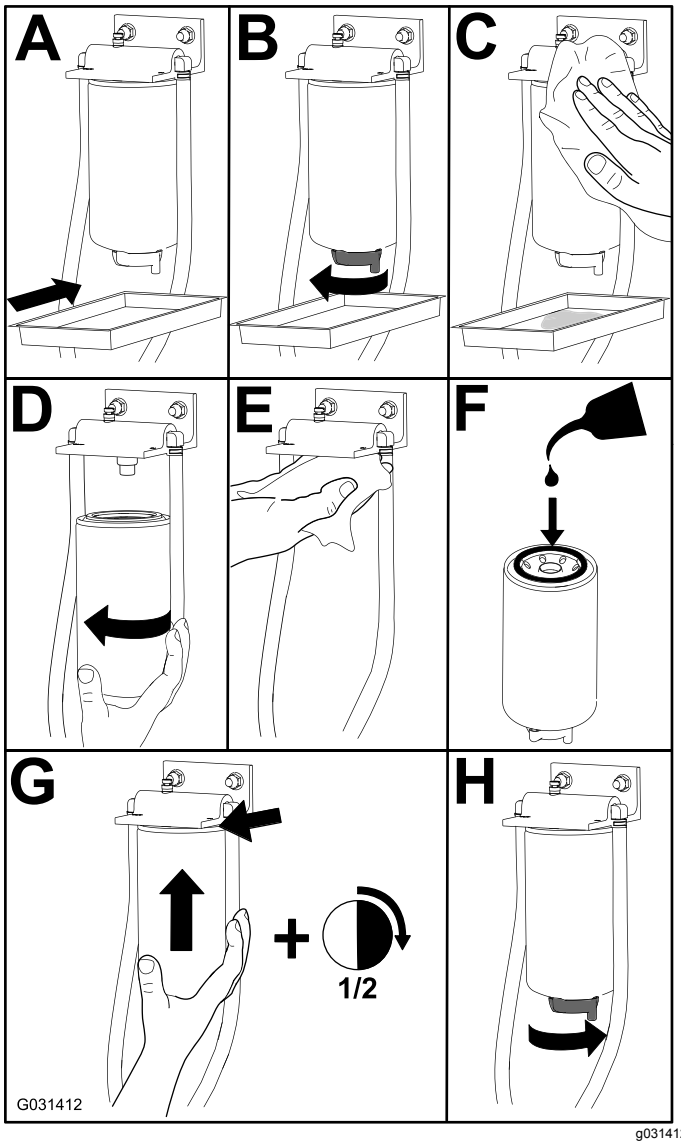

Figure 58

Servicing the Fuel Filter

Service Interval: Every 400 hours

1. Clean the area around the fuel filter head (Figure 59).

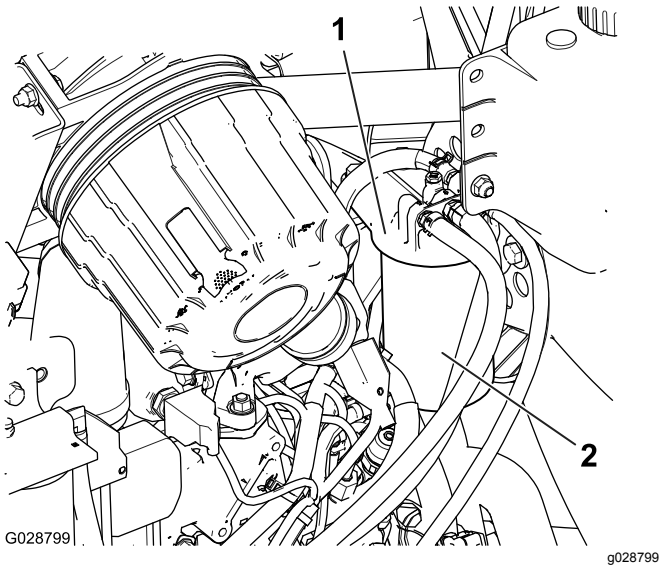

Figure 59

1. Fuel-filter head 2. Fuel Filter

2. Remove the filter and clean the filter-head mounting surface (Figure 59).
3. Lubricate the filter gasket with clean lubricating engine oil; refer to the *Engine Operator's Manual*.
4. Install the dry filter canister, by hand, until the gasket contacts the filter head, then rotate it an additional 1/2 turn.
5. Start the engine and check for fuel leaks around the filter head.

Servicing the Fuel-Pickup Tube

The fuel-pickup tube, located inside the fuel tank, is equipped with a screen to help prevent debris from entering the fuel system. Remove fuel pick-up tube and clean the screen as required.

Electrical System Maintenance

Charging and Connecting the Battery

WARNING

CALIFORNIA
Proposition 65 Warning

Battery posts, terminals, and related accessories contain lead and lead compounds, chemicals known to the State of California to cause cancer and reproductive harm. Wash hands after handling.

1. Unlatch and raise the operator's console panel (Figure 60).

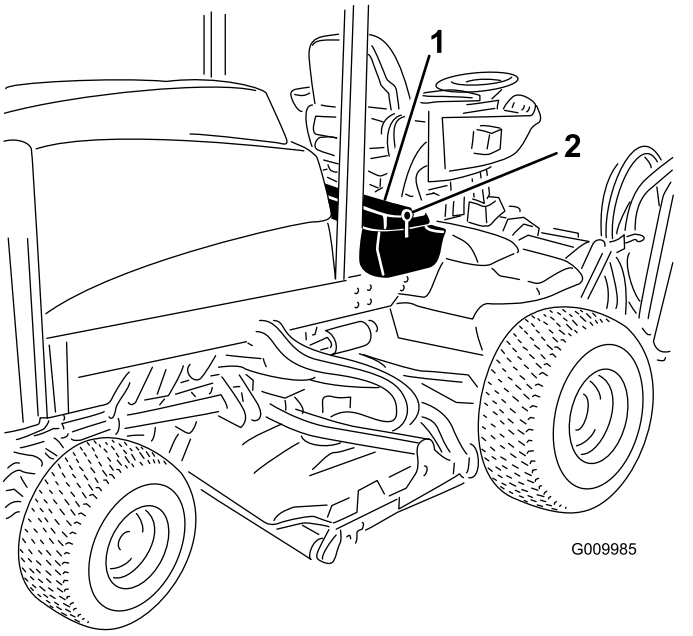

Figure 60

1. Operator's console panel 2. Latch

⚠ DANGER

Battery electrolyte contains sulfuric acid which is a deadly poison and causes severe burns.

- **Do not drink electrolyte and avoid contact with skin, eyes, or clothing. Wear safety glasses to shield your eyes and rubber gloves to protect your hands.**
- **Fill the battery where clean water is always available for flushing the skin.**

2. Connect a 3 to 4 A battery charger to the battery posts. Charge the battery at a rate of 3 to 4 A for 4 to 8 hours.
3. When the battery is charged, disconnect the charger from the power outlet and battery posts.

⚠ WARNING

Charging the battery produces gasses that can explode.

Never smoke near the battery and keep sparks and flames away from battery.

4. Install the positive cable (red) to the positive (+) terminal and the negative cable (black) to the negative (-) terminal of the battery (Figure 61).
5. Secure the cables to the posts with bolts and nuts.

   Note: Make sure that the positive (+) terminal is all of the way onto the post and the cable is positioned snug to the battery. The cable must not contact the battery cover.
6. Slide the rubber boot over the positive terminal to prevent a possible short from occurring.

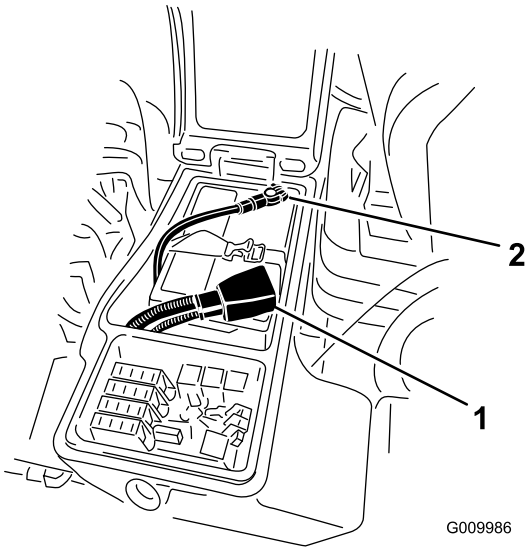

g009986

Figure 61

1. Positive battery cable
2. Negative battery cable

WARNING

CALIFORNIA
Proposition 65 Warning

Battery posts, terminals, and related accessories contain lead and lead compounds, chemicals known to the State of California to cause cancer and reproductive harm. Wash hands after handling.

7. Coat both battery connections with Grafo 112X (skin-over) grease, Part No. 505-47, petroleum jelly, or light grease to prevent corrosion. Slide the rubber boot over the positive terminal.
8. Close the console panel and secure the latch.

⚠ WARNING

Battery terminals or metal tools could short against metal components, causing sparks. Sparks can cause the battery gasses to explode, resulting in personal injury.

- **When removing or installing the battery, do not allow the battery terminals to touch any metal parts of the machine.**
- **Do not allow metal tools to short between the battery terminals and metal parts of the machine.**

⚠ WARNING

Incorrect battery cable routing could damage the machine and cables causing sparks. Sparks can cause the battery gasses to explode, resulting in personal injury.

- **Always disconnect the negative (black) battery cable before disconnecting the positive (red) cable.**
- **Always connect the positive (red) battery cable before connecting the negative (black) cable.**

Servicing the Battery

Service Interval: Every 50 hours—Check the battery condition.

Important: **Before welding on the machine, disconnect the negative (black) cable from the battery to prevent damage to the electrical system.**

Note: Keep the terminals and the entire battery case clean to avoid slow discharge. To clean the battery, remove it from the machine and wash the entire case with a solution of baking soda and water. Rinse with clear water. Coat the battery posts and cable connectors with Grafo 112X (skin-over) grease (Part No. 505-47) or petroleum jelly to prevent corrosion.

Fuses

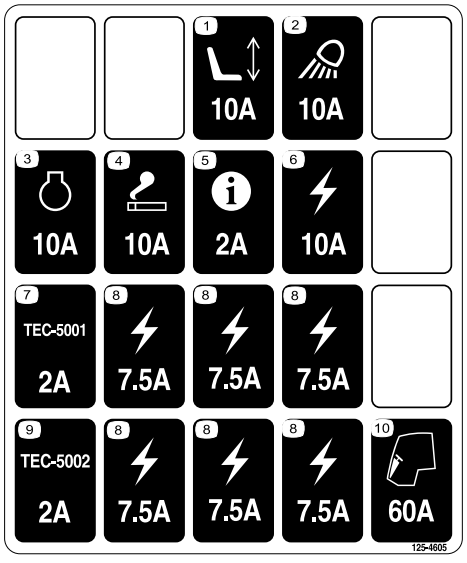

decal125-4605

Figure 62

Unhook the latch and raise operator's console panel (Figure 63) to expose the fuses (Figure 64).

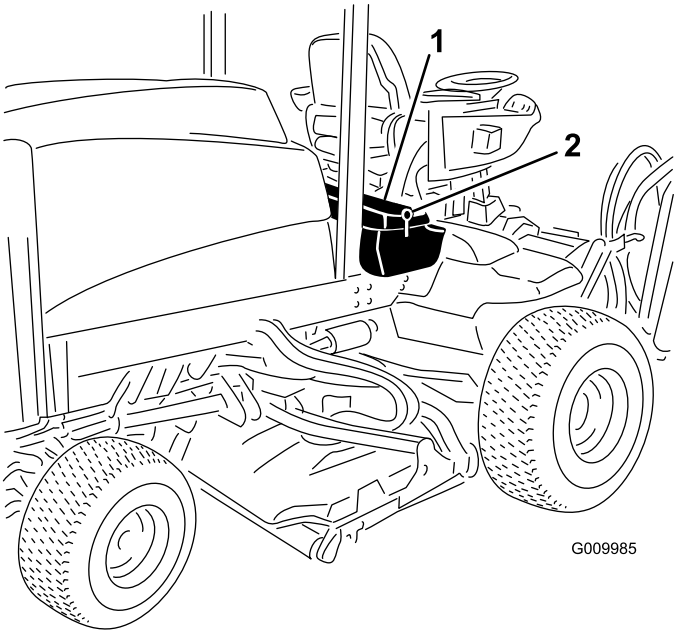

g009985

Figure 63

1. Latch
2. Operator's console panel

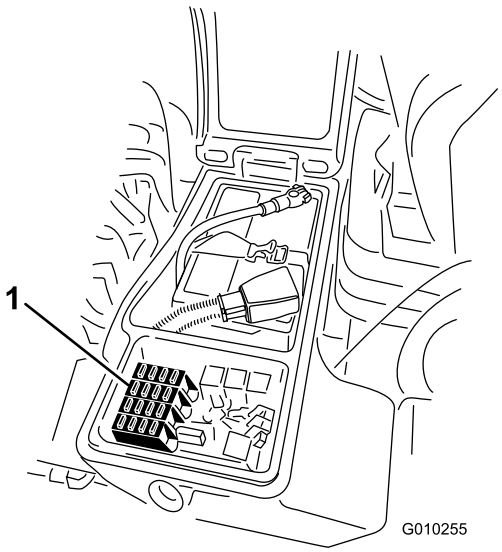

g010255

Figure 64

1. Fuses

Drive System Maintenance

Checking for End-Play in the Planetary Drives

Service Interval: Every 400 hours

There should be no end-play in the planetary drives/drive wheels (i.e., the wheels should not move when you pull or push them in a direction parallel to the axle).

1. Park the machine on a level surface, lower the cuting units, shut off the engine, and remove the key from the ignition switch.
2. Chock the rear wheels and raise the front of machine, supporting the front axle/frame on jack stands.

⚠ DANGER

A machine on a jack may be unstable and slip off of the jack, injuring anyone beneath it.

- **Do not start the engine while the machine is on a jack.**
- **Always remove the key from the ignition before getting off of the machine.**
- **Block the tires when you are raising the machine with a jack.**
- **Support the machine with jack stands.**

3. Grasp 1 of the front drive wheels and push/pull it toward and away from the machine, noting any movement.

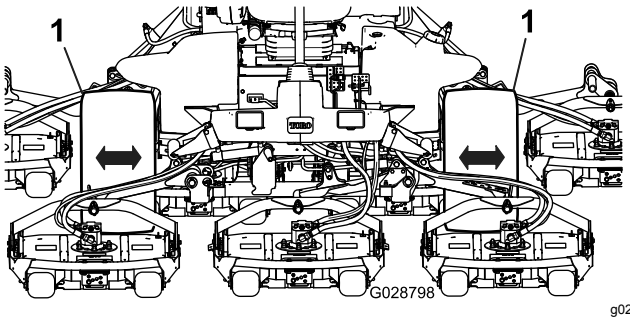

g028798

Figure 65

1. Front drive wheels

4. Repeat step 3 for the other drive wheel.
5. If either wheel moves, contact your Toro Distributor to have the planetary drive rebuilt.

Checking the Planetary Gear Drive Oil

Service Interval: Every 400 hours

Use high quality SAE 85W-140 wt. gear lube as a replacement.

1. With machine on level surface, position the wheel so one check plug (Figure 66) is at the 12 o'clock position and the other is at 3 o'clock position.

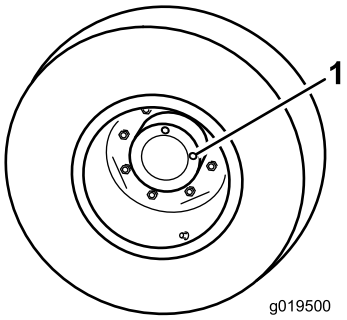

g019500

Figure 66

1. Check/drain plug (2)

2. Remove the plug at the 3 o'clock position (Figure 66).

   Note: The oil level should be at the bottom of the check-plug hole.

3. If the oil level is low, remove the plug at the 12 o'clock position and add oil until it begins to flow out the hole at the 3 o'clock position.

   Install both plugs.

4. Repeat steps 1 through 4 on the opposite planetary gear assembly.

Changing the Planetary Gear Drive Oil

Service Interval: After the first 200 hours

Every 800 hours (or yearly, whichever comes first).

Use a high quality SAE 85W-140 wt. gear lube as replacement.

1. Position the machine on a level surface and position a wheel so that 1 of the check plugs is at the lowest (6 o'clock) position (Figure 67).

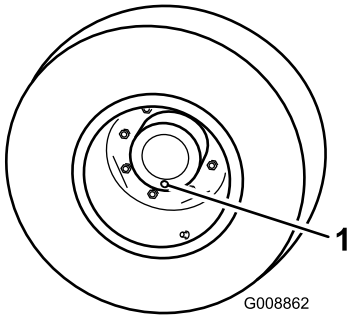

Figure 67

1. Check/drain plug

2. Place a drain pan under the planetary hub, remove the plug, and allow the oil to drain.
3. Place a drain pan under the brake housing, remove the drain plug, and allow the oil to drain (Figure 68).

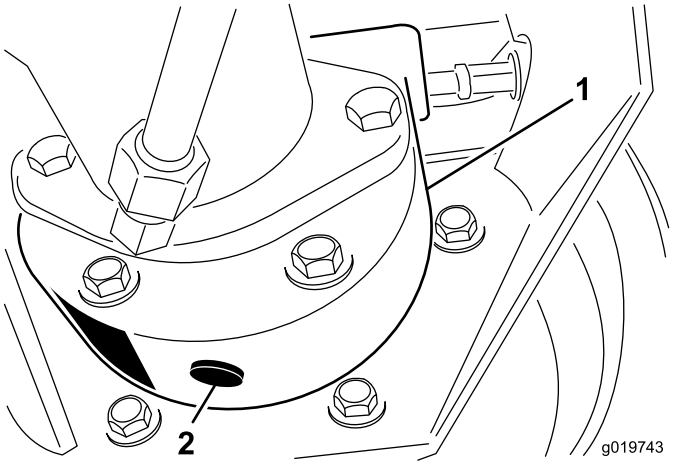

Figure 68

1. Brake housing
2. Drain plug

4. When all of the oil has drained from both locations, install the plug in the brake housing.
5. Rotate the wheel until the open plug hole, in the planetary, is at the twelve o'clock position.
6. Through the open hole, slowly fill the planetary with 0.65 L (22 oz) of high quality SAE 85W-140 wt. gear lube.

   Important: **If the planetary fills before the 0.65 L (22 oz) of oil is added, wait 1 hour or install the plug and move the machine approximately 3 m (10 ft) to distribute the oil through the brake system. Then, remove the plug and add the remaining oil.**

   Install the plug.
7. Repeat the procedure on the opposite planetary/brake assembly.

Checking the Rear Axle Lubricant

Service Interval: Every 400 hours

The rear axle is shipped from the factory filled with SAE 85W-140 wt. gear lube. The capacity is 2.4 L (80 oz). Visually inspect for leaks daily.

1. Position the machine on a level surface.
2. Remove a check plug from 1 end of the axle (Figure 69) and make sure that the lubricant is up to the bottom of the hole.
3. If the level is low, remove the fill plug (Figure 69) and add enough lubricant to bring the level up to the bottom of the check plug holes.

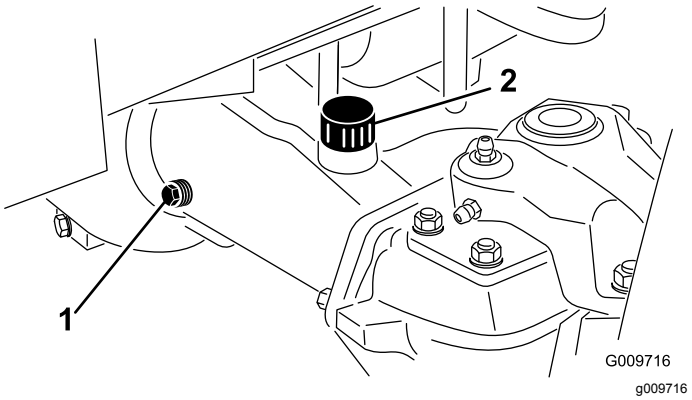

Figure 69

1. Check plug
2. Fill plug

Changing the Rear Axle Lubricant

Service Interval: After the first 200 hours
Every 800 hours

1. Position the machine on a level surface.
2. Clean the area around the 3 drain plugs, 1 on each end and 1 in the center (Figure 70).

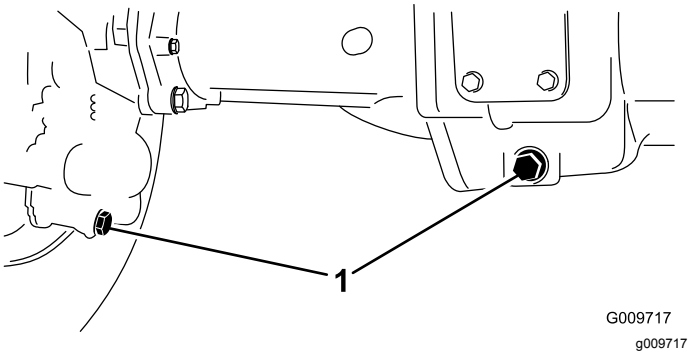

Figure 70

1. Drain-plug location

3. Remove the 3 oil-level check plugs and main axle vent cap to ease in draining of the oil.
4. Remove the drain plugs and allow the oil to drain into the pans.
5. Install the plugs.
6. Remove a check plug and fill axle with approximately 2.4 L (80 oz) of 85W-140 gear lube or until lubricant is up to bottom of hole.
7. Install the check plug.

Checking the Rear Axle Gear Box Lubricant

Service Interval: Every 400 hours

The gear box is filled with SAE 85W-140 gear lube. Check the oil level before the engine is first started and every 400 hours thereafter. The capacity is 0.5 L (16 oz). Visually inspect for leaks daily.

1. Position the machine on a level surface.
2. Remove the check/fill plug from the left side of the gear box (Figure 71) and make sure that lubricant is up to the bottom of the hole. If the level is low, add enough lubricant to bring the level up to the bottom of the hole.

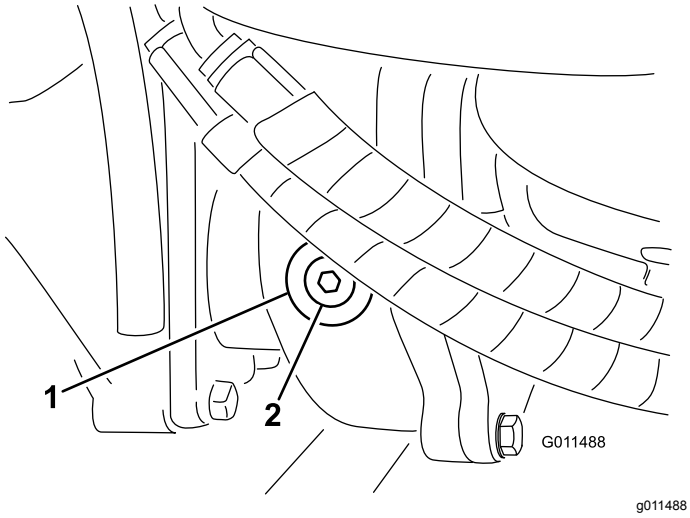

Figure 71

1. Gear box
2. Check/fill plug

Checking the Rear Wheel Toe-In

Service Interval: Every 800 hours/Yearly (whichever comes first)

1. Measure the center-to-center distance (at axle height) at the front and rear of the steering tires. The front measurement must be 3 mm (1/8 inch) less than the rear measurement (Figure 72).

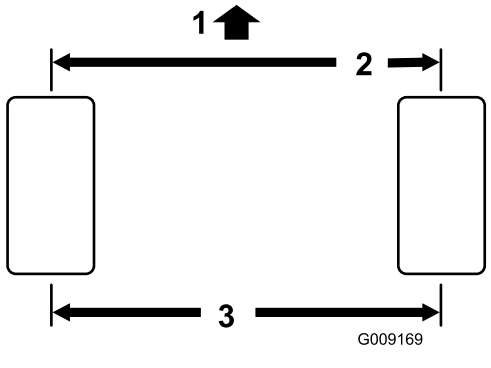

Figure 72

1. Front of traction unit
2. 1/8 inch less than rear of tire
3. Center to center distance

2. To adjust, remove the cotter pin and nut from either tie rod ball joint (Figure 73). Remove the tie-rod ball joint from the axle-case support.

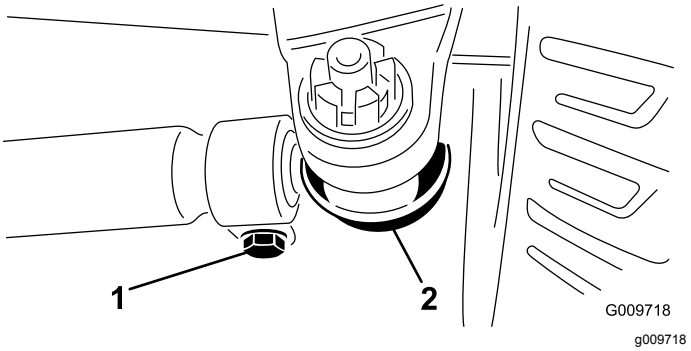

Figure 73

1. Tie-rod clamp
2. Tie-rod ball joint

3. Loosen the clamps at both ends of the tie rods (Figure 73).
4. Rotate the detached ball joint inward or outward 1 complete revolution and tighten the clamp at the loose end of the tie rod.
5. Rotate the entire tie rod assembly the same direction (inward or outward) 1 complete revolution and tighten the clamp at the connected end of the tie rod.
6. Install the ball joint in the axle-case support, tighten the nut finger-tight, and measure the toe-in.
7. Repeat procedure if necessary.
8. Tighten the nut and install a new cotter pin when the adjustment is correct.

Cooling System Maintenance

Cooling System Safety

⚠ CAUTION

Discharge of hot, pressurized coolant or touching a hot radiator and surrounding parts can cause severe burns.

- **Do not remove the radiator cap when the engine is hot. Always allow the engine to cool at least 15 minutes or until the radiator cap is cool enough to touch without burning your hand before removing the radiator cap.**
- **Do not touch the radiator and surrounding parts that are hot.**

⚠ DANGER

Swallowing engine coolant can cause poisoning.

- **Do not swallow engine coolant.**
- **Keep out of reach from children and pets.**

Checking the Cooling System

Service Interval: Before each use or daily

Check level of coolant at the beginning of each day. The capacity of the system is 8.5 L (9 US qt).

1. Carefully remove the radiator cap.

   ⚠ CAUTION

   If the engine has been running, the pressurized, hot coolant can escape and cause burns.

   - **Do not open the radiator cap when the engine is running.**
   - **Use a rag when opening the radiator cap, and open the cap slowly to allow steam to escape.**

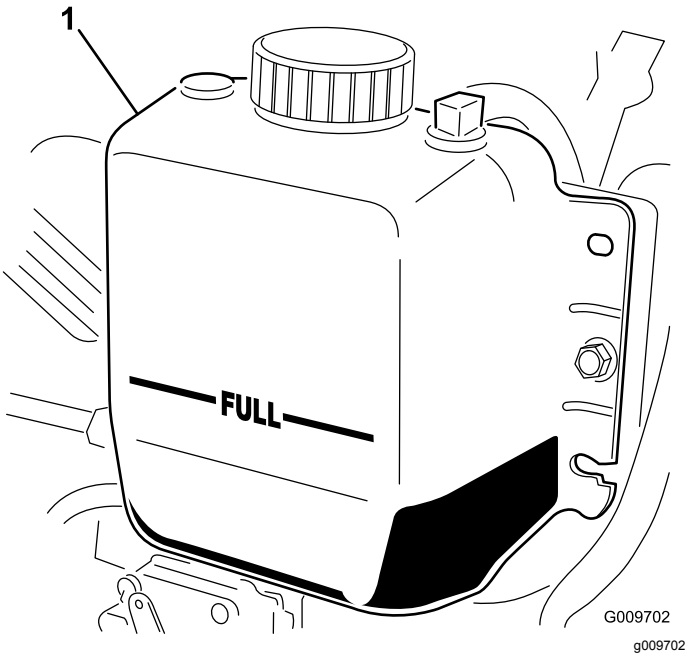

Figure 74

1. Expansion tank

2. Check the coolant level in the radiator. The radiator should be filled to the top of the filler neck and the expansion tank filled to the FULL mark (Figure 74).
3. If the coolant is low, add a 50/50 mixture of water and ethylene glycol anti freeze. Do not use water only or alcohol/methanol base coolants.
4. Install the radiator cap and expansion-tank cap.

Cleaning the Cooling System

Service Interval: Before each use or daily—Remove debris from the engine area, oil cooler, and radiator.

Clean them more frequently in dirty conditions.

This machine is equipped with a hydraulically driven fan drive system that automatically (or manually) reverses to reduce oil cooler/radiator and screen debris build-up. While this feature can help reduce the time required to clean oil cooler/radiator, it does not eliminate the need for routine cleaning. Periodic cleaning and inspection of the radiator/cooler is still required.

1. Unlatch and swing open the rear screen (Figure 75).

   Note: To remove the screen, lift off the hinge pins.

2. Clean the screen thoroughly of all debris.

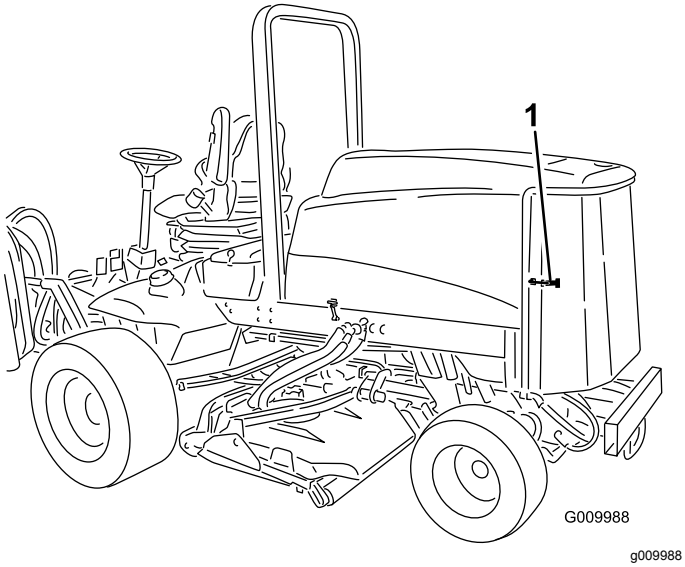

Figure 75

1. Rear-screen latch

3. Thoroughly clean both sides of the oil cooler and the radiator (Figure 76) with compressed air. Start from the front and blow the debris out toward the back. Then clean from the back side and blow toward the front. Repeat procedure several times until you remove all chaff and debris.

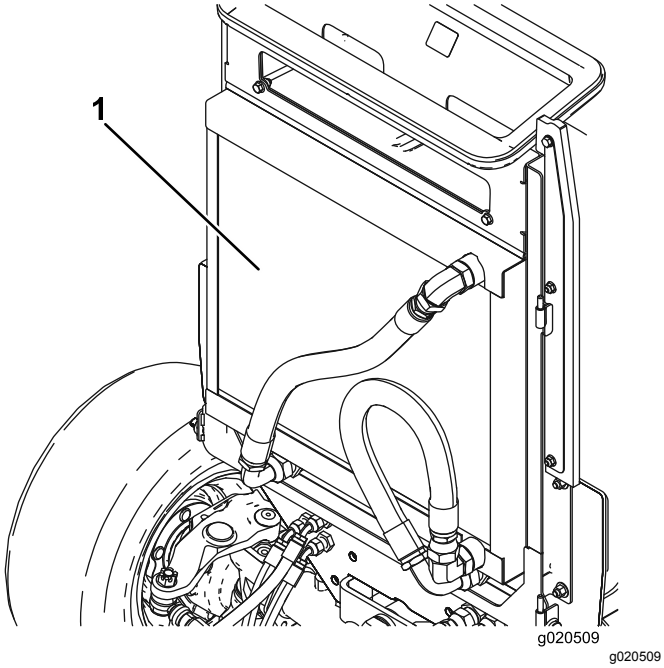

Figure 76

1. Oil cooler/radiator

Important: **Cleaning the oil cooler/radiator with water promotes premature corrosion damage to components and compacts debris.**

4. Close the rear screen and secure it with the latch.

Brake Maintenance

Adjusting the Service Brakes

Adjust the service brakes when there is more than 25 mm (1 inch) of free travel of the brake pedal or when the brakes do not work effectively. Free travel is the distance the brake pedal moves before braking resistance is felt.

1. Disengage the locking latch from the brake pedals so that both pedals work independently of each other.
2. To reduce free travel of the brake pedals, tighten the brakes:
   A. Loosen the front nut on the threaded end of the brake cable (Figure 77).

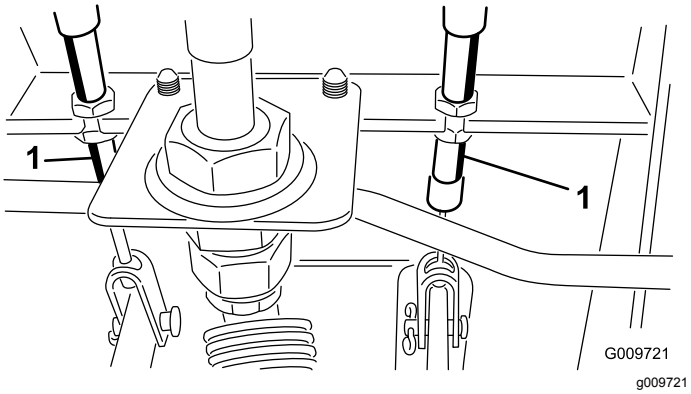

Figure 77

1. Brake cable

   B. Tighten the rear nut to move the cable backward until the brake pedals have 13 to 25 mm (1/2 to 1 inch) of free travel.
   C. Tighten the front nuts after the brakes are adjusted correctly.

Belt Maintenance

Servicing the Alternator Belt

Service Interval: Every 100 hours

1. Check the tension of the alternator belt by depressing it midway between the alternator and the crankshaft pulleys with 4.5 kg (10 lb) of force.

   Note: The belt should deflect 10mm (3/8 inch). If the deflection is incorrect, proceed to step 2. If correct, continue operation.
2. Loosen the alternator-mounting bolts (Figure 78).
3. Increase or decrease the alternator belt tension and tighten the bolts. Check the deflection of the belt again to ensure that the tension is correct.

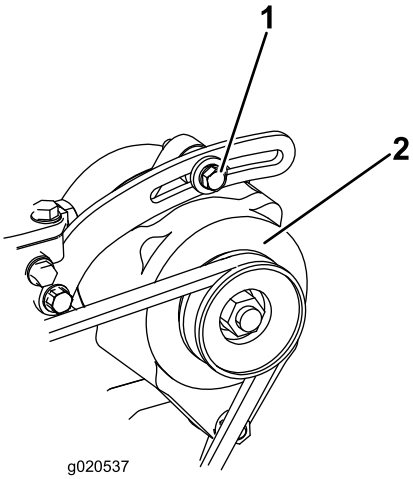

Figure 78

1. Mounting bolt
2. Alternator

Hydraulic System Maintenance

Hydraulic System Safety

⚠ WARNING

Hydraulic fluid escaping under pressure can penetrate skin and cause injury.

- **Ensure that all hydraulic-fluid hoses and lines are in good condition and all hydraulic connections and fittings are tight before applying pressure to the hydraulic system.**
- **Keep your body and hands away from pinhole leaks or nozzles that eject high-pressure hydraulic fluid.**
- **Use cardboard or paper to find hydraulic leaks.**
- **Safely relieve all pressure in the hydraulic system before performing any work on the hydraulic system.**
- **Seek immediate medical attention if fluid is injected into the skin.**

Checking the Hydraulic-Fluid Level

Service Interval: Before each use or daily

The reservoir is filled at the factory with approximately 28.4 L (7.50 US gallons) of high-quality hydraulic fluid. Check the level of the hydraulic fluid before the engine is first started and daily thereafter. The recommended replacement fluid is as follows:

Toro Premium All Season Hydraulic Fluid (Available in 19 L (5 US gallons) pails or 208 L (55 US gallons) drums. See the *Parts Catalog* or your Toro Distributor for part numbers).

Alternative fluids: If the Toro fluid is not available, other **conventional, petroleum-based** fluids may be used, provided they meet all of the following material properties and industry specifications. Check with your oil supplier to see whether the oil meets these specifications.

Note: Toro does not assume responsibility for damage caused by improper substitutions, so use only products from reputable manufacturers who will stand behind their recommendation.

High Viscosity Index/Low Pour Point Anti-wear Hydraulic Fluid, ISO VG 46

Material Properties:	
Viscosity, ASTM D445	cSt @ 40°C (104°F) 44 to 50 cSt @ 100°C (212°F) 7.9 to 9.1
Viscosity Index ASTM D2270	140 to 160
Pour Point, ASTM D97	-37°C to -45°C (-34°F to -49°F)
Industry Specifications:	Vickers I-286-S (Quality Level), Vickers M-2950-S (Quality Level), Denison HF-0

Important: **The ISO VG 46 Multigrade fluid has been found to offer optimal performance in a wide range of temperature conditions. For operation in consistently high ambient temperatures, 65°F (18°C) to 120°F (49°C), ISO VG 68 hydraulic fluid may offer improved performance.**

Premium Biodegradable Hydraulic Fluid-Mobil EAL EnviroSyn 46H

Important: **Mobil EAL EnviroSyn 46H is the only synthetic biodegradable fluid approved by Toro. This fluid is compatible with the elastomers used in Toro hydraulic systems and is suitable for a wide-range of temperature conditions. This fluid is compatible with conventional mineral oils, but for maximum biodegradability and performance the hydraulic system should be thoroughly flushed of conventional fluid. The fluid is available in 19 L (5 US gallon) containers or 208 L (55 US gallon) drums from your Mobil Distributor.**

Important: **Many hydraulic fluids are almost colorless, making it difficult to spot leaks. A red dye additive for the hydraulic system fluid is available in 20 ml (2/3 oz) bottles. 1 bottle is sufficient for 15 to 22 L (4 to 6 US gallons) of hydraulic fluid. Order part no. 44-2500 from your Toro Distributor.**

1. Park the machine on a level surface, engage the parking brake, lower the mower decks, shut off the engine, and remove the key.
2. Check the hydraulic-fluid level (Figure 79).

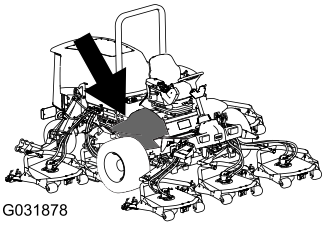

g031878

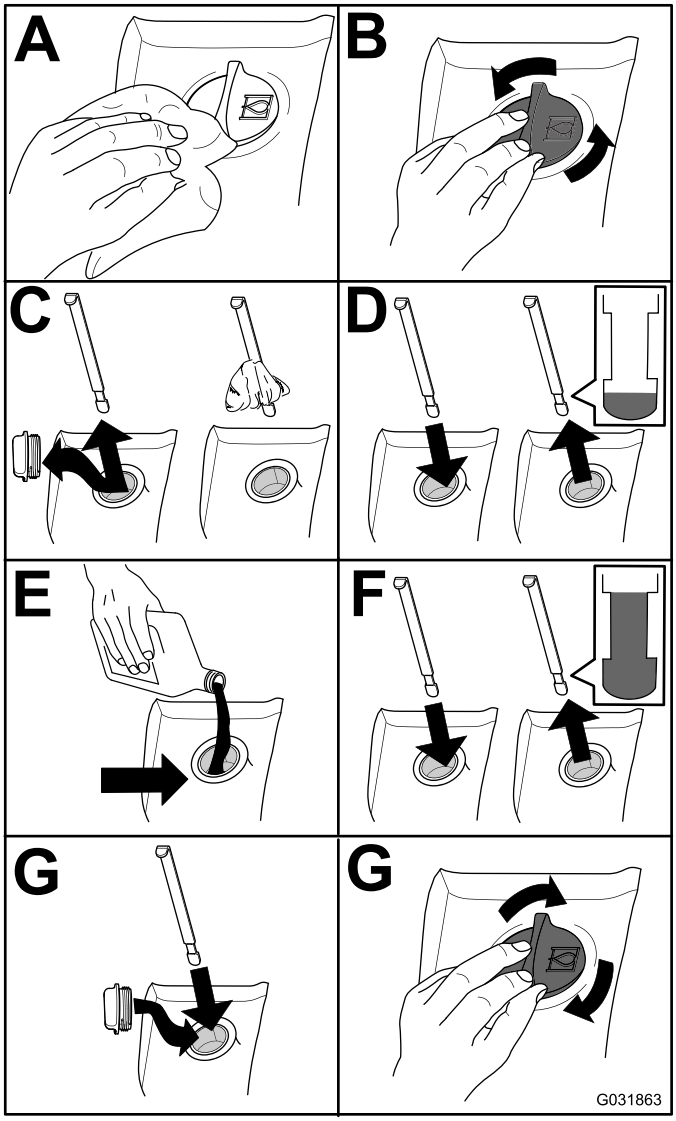

g031863

Figure 79

2. Disconnect the case return line from the bottom of the reservoir and let the hydraulic fluid flow into a large drain pan.
3. Install the hose when the hydraulic fluid stops draining.
4. Fill the reservoir with approximately 28.4 L (7.50 US gallons) of hydraulic fluid; refer to Checking the Hydraulic-Fluid Level (page 59).

   Important: **Use only the hydraulic fluids specified. Other fluids could cause system damage.**
5. Install the reservoir cap.
6. Turn the key in the ignition switch to the ON position to start the engine, use all of the hydraulic controls to distribute hydraulic fluid throughout the system, and check for leaks.
7. Turn the key in the ignition switch to the OFF position.
8. Check the fluid level and add enough to raise level the level to the FULL mark on the dipstick. **Do not overfill.**

Changing the Hydraulic Fluid

Service Interval: Every 800 hours

If the fluid becomes contaminated, contact your Toro Distributor because the system must be flushed. Contaminated fluid looks milky or black when compared to clean oil.

1. Turn the key in the ignition switch to the OFF position and raise the hood.

Replacing the Hydraulic Filters

Service Interval: After the first 200 hours

Every 800 hours

Use Toro replacement filters Part No. 94-2621 for the rear (cutting unit) of the machine and Part No. 75-1310 for the front (charge) of the machine.

Important: **Use of any other filter may void the warranty on some components.**

1. Position the machine on a level surface, lower the cutting units, shut off the engine, engage the parking brakes, and remove the ignition key.
2. Replace the hydraulic filters (Figure 80).

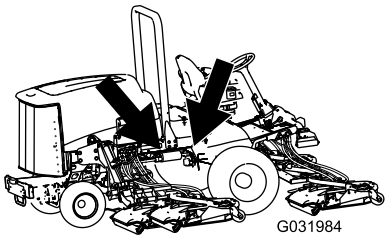

g031984

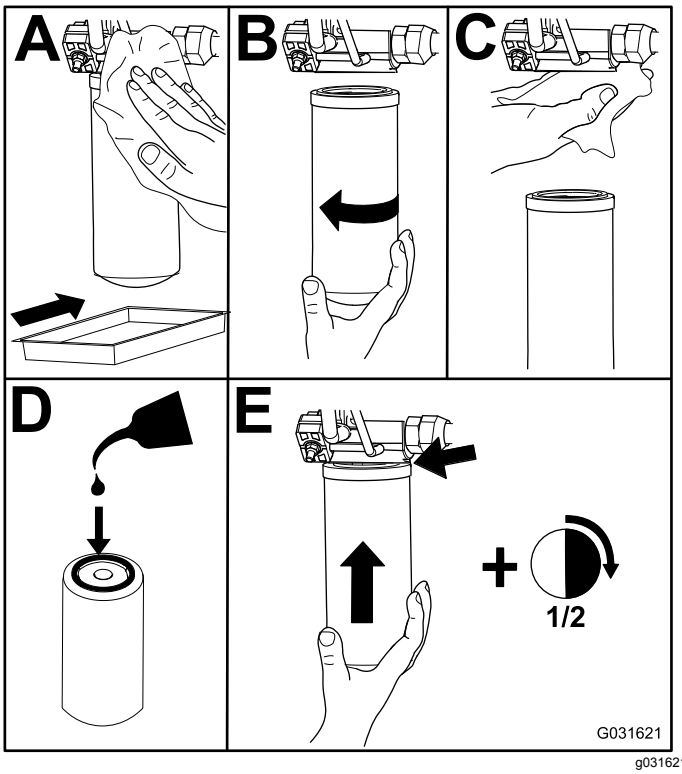

g031621

Figure 80

3. Start the engine and let it run for about 2 minutes to purge air from the system. Shut off the engine and check for leaks.

Checking the Hydraulic Lines and Hoses

Service Interval: Before each use or daily

Inspect the hydraulic lines and hoses for leaks, kinked lines, loose mounting supports, wear, loose fittings, weather deterioration, and chemical deterioration. Make all necessary repairs before operating the machine.

⚠ WARNING

Hydraulic fluid escaping under pressure can penetrate skin and cause injury.

- **Make sure that all hydraulic-fluid hoses and lines are in good condition and all hydraulic connections and fittings are tight before applying pressure to the hydraulic system.**
- **Keep your body and hands away from pin hole leaks or nozzles that eject high-pressure hydraulic fluid.**
- **Use cardboard or paper to find hydraulic leaks.**
- **Safely relieve all pressure in the hydraulic system before performing any work on the hydraulic system.**
- **Seek immediate medical attention if fluid is injected into the skin.**

Cutting Deck Maintenance

Separating the Cutting Decks from the Traction Unit

1. Position the machine on a level surface, lower the cutting decks to the floor, turn the key in the ignition switch to the OFF position, and engage the parking brake.
2. Disconnect and remove the hydraulic motor from the deck (Figure 81). Cover the top of the spindle to prevent contamination.

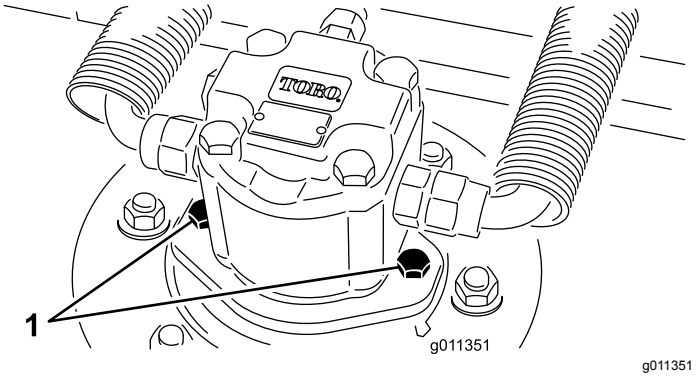

g011351

Figure 81

1. Motor-mounting screws

3. Remove the lynch pin or retaining nut (Groundsmater 4700 only) securing the deck-carrier frame to the lift-arm pivot pin (Figure 82).

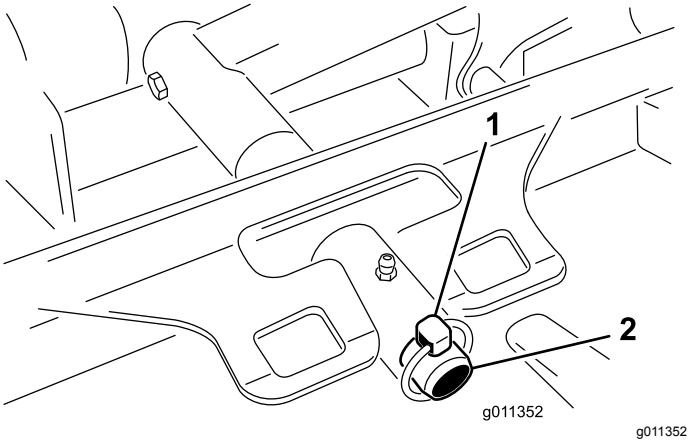

g011352

Figure 82

1. Lynch pin
2. Lift-arm pivot pin

4. Roll the cutting deck away from the traction unit.

Mounting the Cutting Decks to the Traction Unit

1. Position the machine on a level surface and turn the key in the ignition switch to the OFF position.
2. Move cutting deck into position in front of traction unit.
3. Slide deck carrier frame onto lift-arm pivot pin. Secure with lynch pin or retaining nut (Groundsmaster 4700 only) (Figure 82).
4. Install the hydraulic motor to the deck (Figure 81). Make sure that the O-ring is in position and not damaged.
5. Grease the spindle.

Servicing the Blade Plane

The rotary deck comes from the factory preset at 5 cm (2 inches) height of cut and blade rake of 7.9 mm (0.310 inch). The left and right heights are also preset to within ± 0.7 mm (0.030 inch) of the other.

The cutting deck is designed to withstand blade impacts without deformation of the chamber. If a solid object is struck, inspect the blade for damage and the blade plane for accuracy.

Inspecting the Blade Plane

1. Remove the hydraulic motor from the cutting deck and remove the cutting deck from the tractor.
2. Use a hoist (or minimum of 2 people) and place the cutting deck on a flat table
3. Mark 1 end of the blade with a paint pen or marker. Use this end of the blade to check all heights.
4. Position the cutting edge of the marked end of the blade at 12 o'clock (straight ahead in the direction of mowing) (Figure 83) and measure height from table to cutting edge of blade.

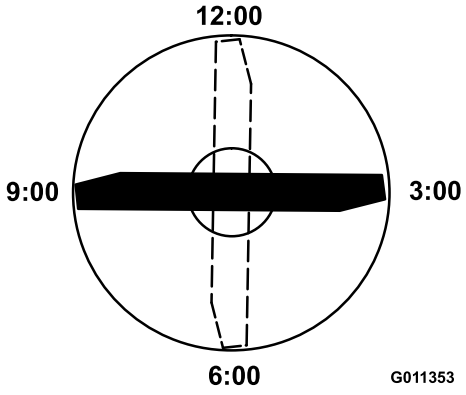

g011353

Figure 83

5. Rotate the marked end of the blade to the 3 and 9 o'clock positions (Figure 83) and measure the heights.
6. Compare the 12 o'clock measured height to the height-of-cut setting. It should be within 0.7 mm (0.030 inch). The 3 and 9 o'clock heights should be 3.8 ± 2.2 mm (0.150 ± 0.090 inch) higher than the 12 o'clock setting and within 2.2 mm (0.090 inch) of each other.

If any of these measurements are not within specification, proceed to Adjusting the Blade Plane (page 63).

Adjusting the Blade Plane

Start with the front adjustment (change 1 bracket at a time).

1. Remove the height-of-cut bracket, (front, left, or right) from the deck frame (Figure 84).
2. Adjust 1.5 mm (0.060 inch) shims and/or 0.7 mm (0.030 inch) shim between the deck frame and bracket to achieve the desired height setting (Figure 84).

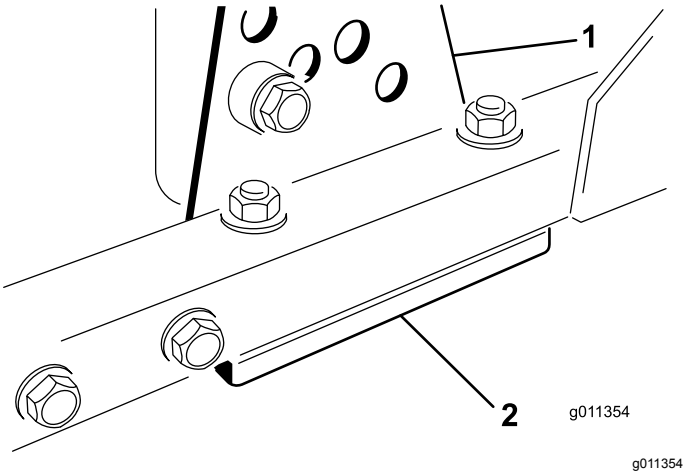

Figure 84

1. Height-of-cut bracket
2. Shims

3. Install the height-of-cut bracket to the deck frame with the remaining shims assembled below the height-of-cut bracket.
4. Secure the socket-head bolt/spacer and flange nut.

   Note: Socket-head bolt/spacer are held together with thread-locking adhesive to prevent the spacer from falling inside the deck frame.
5. Verify the 12 o'clock height and adjust if needed.
6. Determine if only 1 or both (right and left) height-of-cut brackets need to be adjusted.

   Note: If the 3 or 9 o'clock side is 3.8 ± 2.2 mm (0.150 ± 0.090 inch) higher than the new front height then no adjustment is needed for that side. Adjust the other side to within ± 2.2 mm (0.090 inch) of the correct side.
7. Adjust the right and/or left height-of-cut brackets by repeating steps 1 through 3.
8. Secure the carriage bolts and flange nuts.
9. Again, verify the 12, 3, and 9 o'clock heights.

Servicing the Cutter Blade

Removing the Cutter Blade

Replace the blade if it hits a solid object, is out of balance, or is bent. Always use genuine Toro replacement blades to be sure of safety and optimum performance. Never use replacement blades made by other manufacturers because they could be dangerous.

1. Raise the cutting deck to the highest position, turn the key in the ignition switch to the OFF position, and engage the parking brake. Block the cutting deck to prevent it from falling accidentally.
2. Grasp the end of the blade using a rag or thickly padded glove. Remove the blade bolt, anti-scalp cup, and blade from the spindle shaft (Figure 85).

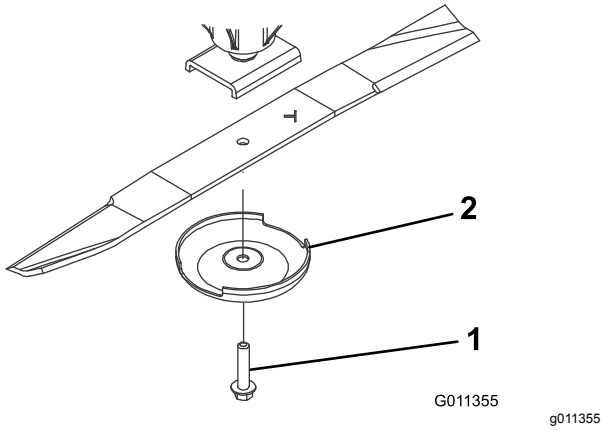

Figure 85

1. Blade bolt
2. Anti-scalp cup

3. Install the blade, sail facing toward the cutting deck, with the anti-scalp cup and blade bolt (Figure 85).
4. Torque the blade bolt to 115 to 149 N-m (85 to 110 ft-lb).

⚠ DANGER

A worn or damaged blade can break, and a piece of the blade could be thrown into the operator's or bystander's area, resulting in serious personal injury or death

- **Inspect the blade periodically for wear or damage.**
- **Never weld a broken or cracked blade.**
- **Always replace a worn or damaged blade.**

Inspecting and Sharpening the Blade

1. Raise the cutting deck to the highest position, turn the key in the ignition switch to the OFF position, and engage the parking brake.
2. Block the cutting deck to prevent it from falling accidentally.
3. Examine the cutting ends of the blade carefully, especially where the flat and curved parts of the blade meet (Figure 86). If wear is noticed (Figure 86), replace the blade; refer to Removing the Cutter Blade (page 63).

   Note: Since sand and abrasive material can wear away the metal that connects the flat and curved parts of the blade, check the blade before using the machine.

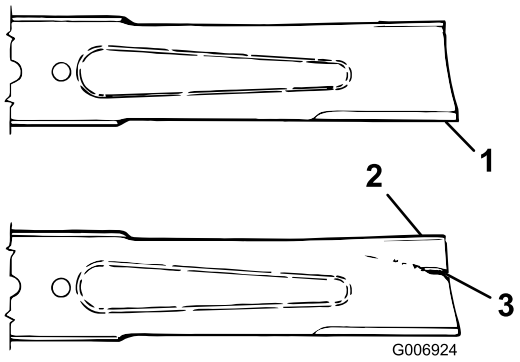

g006924

Figure 86

1. Cutting edge
2. Sail
3. Wear/slot/crack

4. Inspect the cutting edges of all blades. If they are dull or nicked, sharpen the top of the cutting edge and maintain the original cutting angle to ensure sharpness (Figure 87).

   Note: The blade will remain balanced if the same amount of metal is removed from both cutting edges.



g006926

Figure 87

1. Sharpen at this angle only

5. To check the blade for being straight and parallel, lay the blade on a level surface and check its ends. The ends of the blade must be slightly lower than the center, and the cutting edge must be lower than the heel of the blade.

Note: This blade will produce good quality of cut and require minimal power from the engine. By contrast, a blade that is higher at the ends than the center, or if cutting edge is higher than the heel, the blade is bent or warped and must be replaced.

6. Install the blade, sail facing toward cutting deck, with the anti-scalp cup and blade bolt.
7. Torque the blade bolt to 115 to 149 N-m (85 to 110 ft-lb).

Servicing the Front Roller

Inspect the front roller for wear, excess wobble, or binding. Service or replace the roller or components if any of these conditions exist.

Disassembling the Front Roller

1. Remove the roller-mounting bolt (Figure 88).
2. Insert a punch through the end of the roller housing and drive the opposite bearing out by alternating taps to the opposite side of inner bearing race. There should be a 1.5 mm (0.060 inch) lip of inner race exposed.

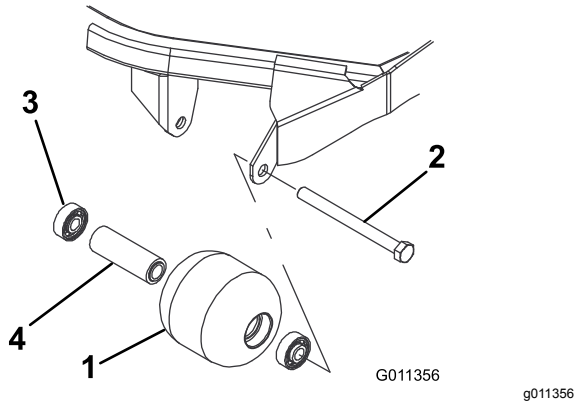

Figure 88

1. Front roller
2. Mounting bolt
3. Bearing
4. Bearing spacer

3. Push the second bearing out in press.
4. Inspect the roller housing, bearings, and bearing spacer for damage (Figure 88). Replace damaged components and assemble.

Assembling the Front Roller

1. Press the first bearing into the roller housing (Figure 88). Press on the outer race only or equally on the inner and outer race.
2. Insert the spacer (Figure 88).
3. Press the second bearing into the roller housing (Figure 88).Pressing equally on the inner and outer race until the inner race comes in contact with the spacer.
4. Install the roller assembly into the deck frame.
5. Verify that there is no more than a 1.5 mm (0.060 inch) gap between roller assembly and the roller mount brackets of the deck frame. If there is a gap over 1.5 mm (0.060 inch), install enough 5/8-inch diameter washers to take up the slop.

Important: **Securing the roller assembly with a gap larger than 1.5 mm (0.060 inch) creates a side load on the bearing and can lead to premature bearing failure**

6. Torque the mounting bolt to 108 N-m (80 ft-lb).

Storage

Preparing the Traction Unit

1. Thoroughly clean the traction unit, cutting units, and the engine.
2. Check the tire pressure; refer to Checking the Tire Pressure (page 23).
3. Check all fasteners for looseness and tighten them as necessary.
4. Grease all grease fittings and pivot points. Wipe up any excess lubricant.
5. Lightly sand and use touch-up paint on painted areas that are scratched, chipped, or rusted. Repair any dents in the metal body.
6. Service the battery and cables as follows:
   A. Remove the battery terminals from the battery posts.
   B. Clean the battery, terminals, and posts with a wire brush and baking soda solution.
   C. Coat the cable terminals and battery posts with Grafo 112X skin-over grease (Part No. 505-47) or petroleum jelly to prevent corrosion.
   D. Slowly recharge the battery every 60 days for 24 hours to prevent lead sulfation of the battery.
7. Engage the transport latches (Groundsmaster 4700–D machines only).

Preparing the Engine

1. Drain the engine oil from the oil pan and install the drain plug.
2. Remove and discard the oil filter. Install a new oil filter.
3. Refill the oil pan with 5.7 L (6 US qt) of SAE 15W-40 CH-4, CI-4, higher motor oil.
4. Start the engine and run it at idle speed for approximately 2 minutes.
5. Shut off the engine.
6. Flush the fuel tank with fresh, clean diesel fuel.
7. Secure all of the fuel system fittings.
8. Thoroughly clean and service the air cleaner assembly.
9. Seal the air cleaner inlet and the exhaust outlet with weatherproof tape.
10. Check the anti freeze protection and add a 50/50 solution of water and ethylene glycol anti-freeze as needed for the expected minimum temperature in your area.

Cutting Deck

If the cutting deck is separated from the traction unit for any length of time, install a spindle plug in the top of the spindle to protect the spindle from dust and water.

International Distributor List

Distributor:	Country:	Phone Number:	Distributor:	Country:	Phone Number:
Agrolanc Kft	Hungary	36 27 539 640	Maquiver S.A.	Colombia	57 1 236 4079
Asian American Industrial (AAI)	Hong Kong	852 2497 7804	Maruyama Mfg. Co. Inc.	Japan	81 3 3252 2285
B-Ray Corporation	Korea	82 32 551 2076	Mountfield a.s.	Czech Republic	420 255 704 220
Brisa Goods LLC	Mexico	1 210 495 2417	Mountfield a.s.	Slovakia	420 255 704 220
Casco Sales Company	Puerto Rico	787 788 8383	Munditol S.A.	Argentina	54 11 4 821 9999
Ceres S.A.	Costa Rica	506 239 1138	Norma Garden	Russia	7 495 411 61 20
CSSC Turf Equipment (pvt) Ltd.	Sri Lanka	94 11 2746100	Oslinger Turf Equipment SA	Ecuador	593 4 239 6970
Cyril Johnston & Co.	Northern Ireland	44 2890 813 121	Oy Hako Ground and Garden Ab	Finland	358 987 00733
Cyril Johnston & Co.	Republic of Ireland	44 2890 813 121	Parkland Products Ltd.	New Zealand	64 3 34 93760
Fat Dragon	China	886 10 80841322	Perfetto	Poland	48 61 8 208 416
Femco S.A.	Guatemala	502 442 3277	Pratoverde SRL.	Italy	39 049 9128 128
FIVEMANS New-Tech Co., Ltd	China	86-10-6381 6136	Prochaska & Cie	Austria	43 1 278 5100
ForGarder OU	Estonia	372 384 6060	RT Cohen 2004 Ltd.	Israel	972 986 17979
G.Y.K. Company Ltd.	Japan	81 726 325 861	Riversa	Spain	34 9 52 83 7500
Geomechaniki of Athens	Greece	30 10 935 0054	Lely Turfcare	Denmark	45 66 109 200
Golf international Turizm	Turkey	90 216 336 5993	Lely (U.K.) Limited	United Kingdom	44 1480 226 800
Hako Ground and Garden	Sweden	46 35 10 0000	Solvert S.A.S.	France	33 1 30 81 77 00
Hako Ground and Garden	Norway	47 22 90 7760	Spypros Stavrinides Limited	Cyprus	357 22 434131
Hayter Limited (U.K.)	United Kingdom	44 1279 723 444	Surge Systems India Limited	India	91 1 292299901
Hydroturf Int. Co Dubai	United Arab Emirates	97 14 347 9479	T-Markt Logistics Ltd.	Hungary	36 26 525 500
Hydroturf Egypt LLC	Egypt	202 519 4308	Toro Australia	Australia	61 3 9580 7355
Irrimac	Portugal	351 21 238 8260	Toro Europe NV	Belgium	32 14 562 960
Irrigation Products Int'l Pvt Ltd.	India	0091 44 2449 4387	Valtech	Morocco	212 5 3766 3636
Jean Heybroek b.v.	Netherlands	31 30 639 4611	Victus Emak	Poland	48 61 823 8369

European Privacy Notice

The Information Toro Collects
Toro Warranty Company (Toro) respects your privacy. In order to process your warranty claim and contact you in the event of a product recall, we ask you to share certain personal information with us, either directly or through your local Toro company or dealer.

The Toro warranty system is hosted on servers located within the United States where privacy law may not provide the same protection as applies in your country.

BY SHARING YOUR PERSONAL INFORMATION WITH US, YOU ARE CONSENTING TO THE PROCESSING OF YOUR PERSONAL INFORMATION AS DESCRIBED IN THIS PRIVACY NOTICE.

The Way Toro Uses Information
Toro may use your personal information to process warranty claims, to contact you in the event of a product recall and for any other purpose which we tell you about. Toro may share your information with Toro's affiliates, dealers or other business partners in connection with any of these activities. We will not sell your personal information to any other company. We reserve the right to disclose personal information in order to comply with applicable laws and with requests by the appropriate authorities, to operate our systems properly or for our own protection or that of other users.

Retention of your Personal Information
We will keep your personal information as long as we need it for the purposes for which it was originally collected or for other legitimate purposes (such as regulatory compliance), or as required by applicable law.

Toro's Commitment to Security of Your Personal Information
We take reasonable precautions in order to protect the security of your personal information. We also take steps to maintain the accuracy and current status of personal information.

Access and Correction of your Personal Information
If you would like to review or correct your personal information, please contact us by email at legal@toro.com.

Australian Consumer Law

Australian customers will find details relating to the Australian Consumer Law either inside the box or at your local Toro Dealer.

The Toro Warranty

A Two-Year Limited Warranty

Conditions and Products Covered

The Toro Company and its affiliate, Toro Warranty Company, pursuant to an agreement between them, jointly warrant your Toro Commercial product ("Product") to be free from defects in materials or workmanship for two years or 1500 operational hours*, whichever occurs first. This warranty is applicable to all products with the exception of Aerators (refer to separate warranty statements for these products). Where a warrantable condition exists, we will repair the Product at no cost to you including diagnostics, labor, parts, and transportation. This warranty begins on the date the Product is delivered to the original retail purchaser.
* Product equipped with an hour meter.

Instructions for Obtaining Warranty Service

You are responsible for notifying the Commercial Products Distributor or Authorized Commercial Products Dealer from whom you purchased the Product as soon as you believe a warrantable condition exists. If you need help locating a Commercial Products Distributor or Authorized Dealer, or if you have questions regarding your warranty rights or responsibilities, you may contact us at:

Toro Commercial Products Service Department
Toro Warranty Company
8111 Lyndale Avenue South
Bloomington, MN 55420-1196

952–888–8801 or 800–952–2740
E-mail: commercial.warranty@toro.com

Owner Responsibilities

As the Product owner, you are responsible for required maintenance and adjustments stated in your *Operator's Manual*. Failure to perform required maintenance and adjustments can be grounds for disallowing a warranty claim.

Items and Conditions Not Covered

Not all product failures or malfunctions that occur during the warranty period are defects in materials or workmanship. This warranty does not cover the following:

- Product failures which result from the use of non-Toro replacement parts, or from installation and use of add-on, or modified non-Toro branded accessories and products. A separate warranty may be provided by the manufacturer of these items.
- Product failures which result from failure to perform recommended maintenance and/or adjustments. Failure to properly maintain your Toro product per the Recommended Maintenance listed in the *Operator's Manual* can result in claims for warranty being denied.
- Product failures which result from operating the Product in an abusive, negligent, or reckless manner.
- Parts subject to consumption through use unless found to be defective. Examples of parts which are consumed, or used up, during normal Product operation include, but are not limited to, brake pads and linings, clutch linings, blades, reels, rollers and bearings (sealed or greasable), bed knives, spark plugs, castor wheels and bearings, tires, filters, belts, and certain sprayer components such as diaphragms, nozzles, and check valves, etc.
- Failures caused by outside influence. Conditions considered to be outside influence include, but are not limited to, weather, storage practices, contamination, use of unapproved fuels, coolants, lubricants, additives, fertilizers, water, or chemicals, etc.
- Failure or performance issues due to the use of fuels (e.g. gasoline, diesel, or biodiesel) that do not conform to their respective industry standards.
- Normal noise, vibration, wear and tear, and deterioration.
- Normal "wear and tear" includes, but is not limited to, damage to seats due to wear or abrasion, worn painted surfaces, scratched decals or windows, etc.

Parts

Parts scheduled for replacement as required maintenance are warranted for the period of time up to the scheduled replacement time for that part. Parts replaced under this warranty are covered for the duration of the original product warranty and become the property of Toro. Toro will make the final decision whether to repair any existing part or assembly or replace it. Toro may use remanufactured parts for warranty repairs.

Deep Cycle and Lithium-Ion Battery Warranty:

Deep cycle and Lithium-Ion batteries have a specified total number of kilowatt-hours they can deliver during their lifetime. Operating, recharging, and maintenance techniques can extend or reduce total battery life. As the batteries in this product are consumed, the amount of useful work between charging intervals will slowly decrease until the battery is completely worn out. Replacement of worn out batteries, due to normal consumption, is the responsibility of the product owner. Battery replacement may be required during the normal product warranty period at owner's expense. Note: (Lithium-Ion battery only): A Lithium-Ion battery has a part only prorated warranty beginning year 3 through year 5 based on the time in service and kilowatt hours used. Refer to the *Operator's Manual* for additional information.

Maintenance is at Owner's Expense

Engine tune-up, lubrication, cleaning and polishing, replacement of filters, coolant, and completing recommended maintenance are some of the normal services Toro products require that are at the owner's expense.

General Conditions

Repair by an Authorized Toro Distributor or Dealer is your sole remedy under this warranty.

Neither The Toro Company nor Toro Warranty Company is liable for indirect, incidental or consequential damages in connection with the use of the Toro Products covered by this warranty, including any cost or expense of providing substitute equipment or service during reasonable periods of malfunction or non-use pending completion of repairs under this warranty. Except for the Emissions warranty referenced below, if applicable, there is no other express warranty. All implied warranties of merchantability and fitness for use are limited to the duration of this express warranty.

Some states do not allow exclusions of incidental or consequential damages, or limitations on how long an implied warranty lasts, so the above exclusions and limitations may not apply to you. This warranty gives you specific legal rights, and you may also have other rights which vary from state to state.

Note regarding engine warranty:

The Emissions Control System on your Product may be covered by a separate warranty meeting requirements established by the U.S. Environmental Protection Agency (EPA) and/or the California Air Resources Board (CARB). The hour limitations set forth above do not apply to the Emissions Control System Warranty. Refer to the Engine Emission Control Warranty Statement supplied with your product or contained in the engine manufacturer's documentation for details

Countries Other than the United States or Canada

Customers who have purchased Toro products exported from the United States or Canada should contact their Toro Distributor (Dealer) to obtain guarantee policies for your country, province, or state. If for any reason you are dissatisfied with your Distributor's service or have difficulty obtaining guarantee information, contact the Toro importer.

374-0253 Rev D