Form No. 3389-168 Rev C

TORO®

Count on it.

Operator's Manual

11 and 14-Blade Cutting Unit

Greensmaster® Flex™/eFlex® 1800/2100 Traction Unit

Model No. 04251—Serial No. 315000001 and Up
Model No. 04252—Serial No. 315000001 and Up
Model No. 04253—Serial No. 315000001 and Up
Model No. 04254—Serial No. 315000001 and Up

Register at www.Toro.com.
Original Instructions (EN)

CE

3389-168 C

⚠ WARNING

CALIFORNIA
Proposition 65 Warning

This product contains a chemical or chemicals known to the State of California to cause cancer, birth defects, or reproductive harm.

Introduction

Read this information carefully to learn how to operate and maintain your product properly and to avoid injury and product damage. You are responsible for operating the product properly and safely.

You may contact Toro directly at www.Toro.com for product safety and operation training materials, accessory information, help finding a dealer, or to register your product.

Whenever you need service, genuine Toro parts, or additional information, contact an Authorized Service Dealer or Toro Customer Service and have the model and serial numbers of your product ready. Figure 1 identifies the location of the model and serial numbers on the product. Write the numbers in the space provided.

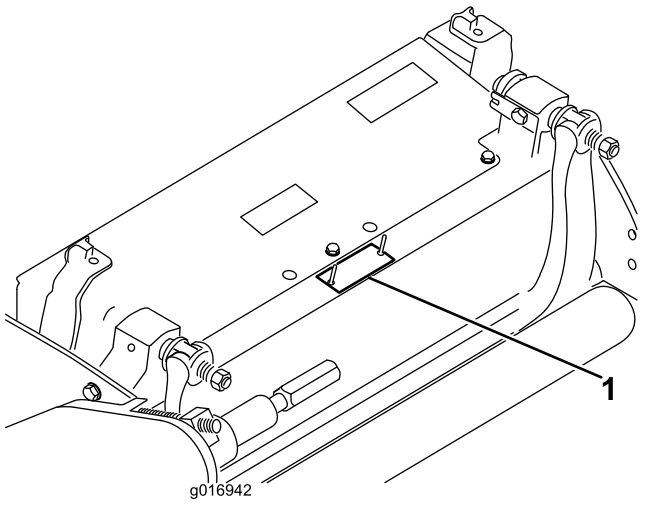

g016942

Figure 1

1. Location of the model and serial numbers

Model No. _____

Serial No. _____

This manual identifies potential hazards and has safety messages identified by the safety-alert symbol (Figure 2), which signals a hazard that may cause serious injury or death if you do not follow the recommended precautions.



g000502

Figure 2

1. Safety alert symbol

This manual uses 2 words to highlight information. **Important** calls attention to special mechanical information and **Note** emphasizes general information worthy of special attention.

Contents

Safety 3
Safety and Instructional Decals 3
Setup 4
1 Installing the Front Roller 4
2 Using the Cutting-Unit Prop 4
3 Adjusting the Bedknife to the Reel 4
4 Adjusting the Rear Roller 5
5 Adjusting the Height of Cut 7
6 Adjusting the Cut-off Bar 8
7 Preparing the Cutting Unit for Use on an eFlex Machine 9
8 Installing the Push Nut (CE Only) 10
Product Overview 11
Specifications 11
Attachments/Accessories 11
Operation 12
Adjusting the Bedknife to Reel Contact 12
Adjusting the Clip Setting 13
Maintenance 15
Servicing the Bedbar 15
Backlapping the Reel 16

© 2017—The Toro® Company
8111 Lyndale Avenue South
Bloomington, MN 55420

Contact us at www.Toro.com.
Printed in the USA
All Rights Reserved

Safety

This machine has been designed in accordance with EN ISO 5395:2013.

- Read, understand, and follow all instructions in the traction unit and cutting unit operator's manuals before operating the cutting unit.
- Keep children out of the operating area. Never allow children to operate the machine.
- Never operate the cutting units while ill, tired, or under the influence of drugs or alcohol.
- Do not operate the machine without all guards and other safety protective devices in place and working on the machine.
- Wear appropriate clothing, including eye protection, slip resistant, substantial footwear, and hearing protection. Tie back long hair and do not wear jewelry.
- Remove all debris or other objects that the cutting-unit blades might pick up and throw. Keep all bystanders away from the working area.
- If the cutting blades strike a solid object or the unit vibrates abnormally, stop and shut off the engine. Check the cutting unit for damaged parts. Repair any damage before starting the cutting unit.
- Keep all nuts, bolts, and screws tight to be sure the equipment is in safe working condition.
- Remove the key from ignition switch to prevent accidental starting of the engine when servicing, adjusting, or storing the machine.
- If major repairs are ever needed or if assistance is desired, contact an authorized Toro distributor.
- To ensure optimum performance and continued safety certification of the machine, use only genuine Toro replacement parts and accessories. Replacement parts and accessories made by other manufacturers could be dangerous, and such use could void the product warranty.

Safety and Instructional Decals

Safety decals and instructions are easily visible to the operator and are located near any area of potential danger. Replace any decal that is damaged or lost.

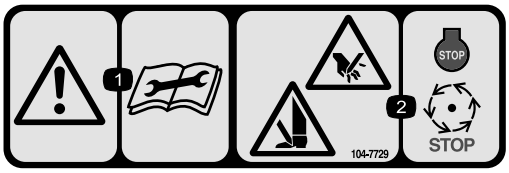

decal104-7729

104–7729

1. Warning—read the instructions before servicing or performing maintenance.
2. Cutting/dismemberment hazard; hand or foot—stop the engine and wait for moving parts to stop.



decal120-9570

120-9570

1. Warning—stay away from moving parts, keep all guards and shields in place.

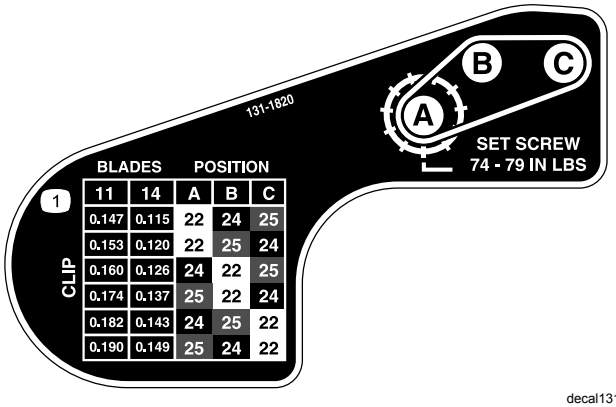

decal131-1820

131-1820

1. Cutting unit clip chart

Setup

Media and Additional Parts

Description	Qty.	Use
Operator's Manual	1	Read this before installing and operating cutting unit.
Parts catalog	1	Use this to reference part numbers.
Certification of compliance	1	Save this for future reference.
Target plate Weight bar	1 1	Install if you are using an eFlex traction unit.

1

Installing the Front Roller

No Parts Required

Procedure

The cutting unit is shipped without a front roller. Install the roller using the loose parts supplied with the cutting unit and installation instructions included with the roller.

2

Using the Cutting-Unit Prop

No Parts Required

Procedure

Whenever the cutting unit has to be tipped to expose the bedknife/reel, prop up the rear of the cutting unit to make sure the nuts on the back end of the bedbar adjusting screws are not resting on the work surface (Figure 3).

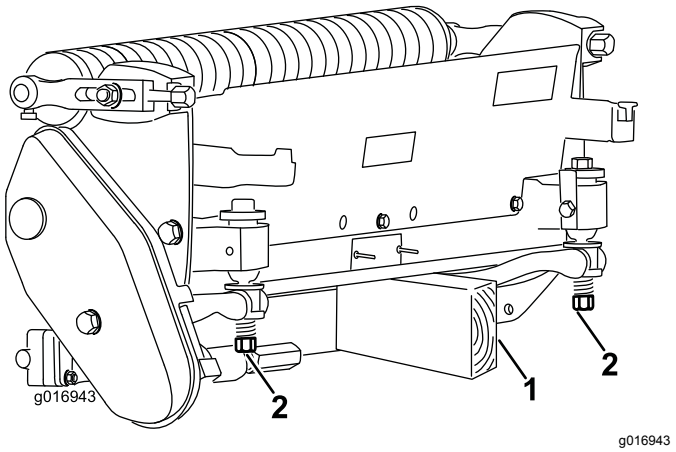

Figure 3

1. Prop (not provided)
2. Bedknife adjusting screw nut (2)

3

Adjusting the Bedknife to the Reel

No Parts Required

Procedure

Note: Use this procedure after grinding, backlapping, or disassembling the reel This **is not** a daily adjustment.

Note: For eFlex cutting units, the reel-to-bedknife contact has significant impact on energy consumption. Very light contact is recommended for optimum cutting performance and minimum battery consumption.

1. Position the cutting unit on a flat, level work surface.
2. Tip the cutting unit to expose the bedknife and reel.

Note: Ensure that the nuts or back of the bedbar adjusting screws are not resting on the work surface (Figure 3).

3. Rotate the reel so that 1 of the blades crosses the bedknife edge between the first and second bedknife screw heads located on the right side of the cutting unit.
4. Make an identifying mark on the blade where it crosses the bedknife edge.

   Note: This will make later adjustments easier.
5. Insert a 0.05 mm (0.002 inch) shim between the blade and the bedknife edge at the point marked in step 4.
6. Turn the right bedbar adjusting screw (Figure 4) until you feel light pressure on the shim when sliding it side-to-side. Remove the shim.

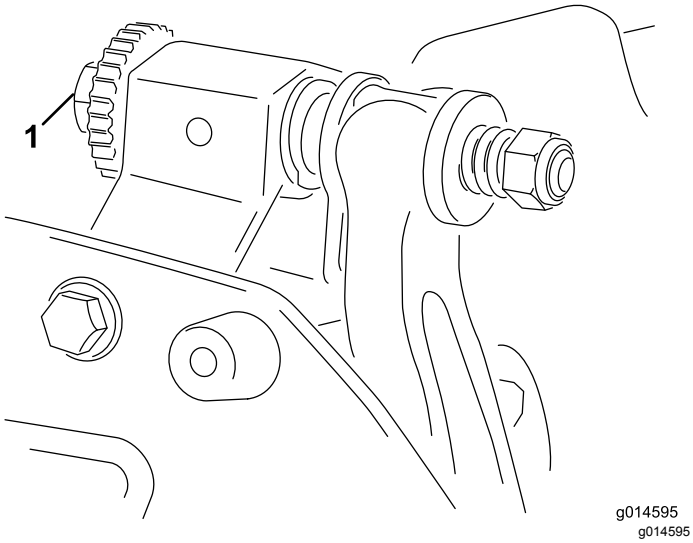

Figure 4

1. Bedbar adjusting screw

7. For the left side of the cutting unit, slowly rotate the reel so that the closest blade crosses the bedknife edge between the first and second screw heads.
8. Repeat steps 4 through 6 for the left side of the cutting unit and left bedbar adjusting screw.
9. Repeat steps 5 and 6 until there is light pressure at the contact points on both the left and right sides of the cutting unit.
10. To obtain light contact between the reel and bedknife, turn each bedbar adjusting screw clockwise 3 click.

    Note: Each click on the bedbar adjusting screw moves the bedknife 0.018 mm (0.0007 inches). **Do not over tighten the adjusting screws.**

    Turning the adjusting screw clockwise moves the bedknife edge closer to the reel. Turning the adjusting screw counterclockwise moves the bedknife edge away from the reel.
11. Test the cutting performance by inserting a long strip of cutting performance paper between the reel and bedknife, perpendicular to the reel and bedknife (Figure 5). Slowly rotate the reel forward to cut the paper.

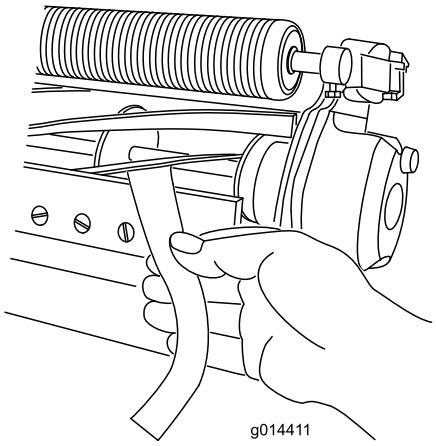

Figure 5

4

Adjusting the Rear Roller

No Parts Required

Procedure

Depending on your desired height-of-cut range you need to adjust the rear roller brackets (Figure 6 or Figure 7) to the low or high position:

- Position the spacer above the sideplate mounting flange (factory setting) when the height-of-cut settings range from 1.5 mm to 6 mm (1/16 inch to 1/4 inch) as shown in Figure 6.

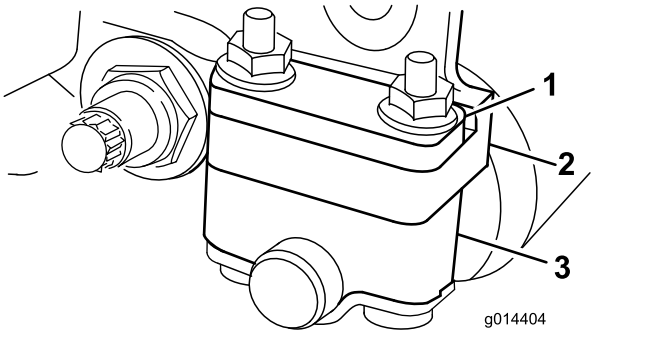

Figure 6

1. Spacer
2. Sideplate mounting flange
3. Roller bracket

- Position the spacer below the sideplate mounting flange when the height of cut settings range from 3 mm to 25 mm (1/8 inch to 1 inch) as shown in Figure 7.

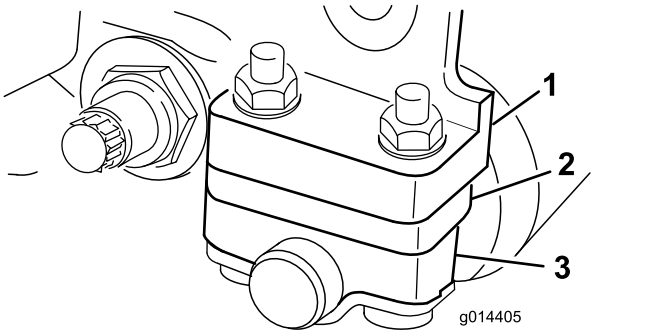

Figure 7

1. Sideplate mounting flange
2. Spacer
3. Roller bracket

1. Raise the rear of the cutting unit and place a block under the bedknife.
2. Remove the 2 nuts securing each roller bracket and spacer to each sideplate mounting flange.
3. Lower the roller and screws from the sideplate mounting flanges and spacers.
4. Place the spacers onto the screws above of below the roller brackets, as required (Figure 6 or Figure 7).
5. Secure the roller bracket and spacers to the underside of the mounting flanges with the nuts previously removed.
6. Verify that the bedknife to reel contact is correct. Tip the machine to expose the front and rear rollers and the bedknife.

   Note: The position of the rear roller to the reel is controlled by the machining tolerances of the assembled components and paralleling is not required. A limited amount of adjustment is possible by setting the cutting unit on a surface plate and loosening the sideplate mounting bolts (Figure 8). Adjust and tighten the bolts when finished.

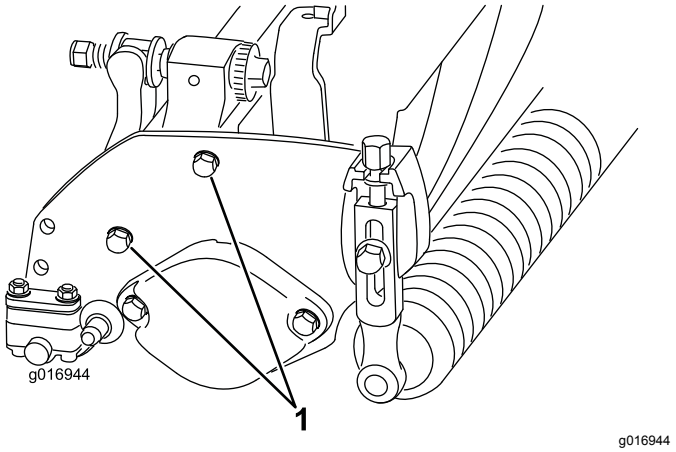

Figure 8

1. Sideplate mounting bolts

Important: **Whenever the cutting unit has to be tipped to expose bedknife/reel, prop up rear of cutting unit to ensure the nuts on the back end of the bedbar adjusting screws are not resting on the work surface (Figure 3).**

5

Adjusting the Height of Cut

No Parts Required

Procedure

Note: This cutting unit comes standard with the Edgemax Micro-cut bedknife and standard bedbar. The effective height of cut is dependent on previous mower configurations and turf conditions (i.e., roller type, bedknife behind center distance, soft or firm greens, season conditions). Set initial height of cut 0.25 mm to 0.38 mm (0.010 to 0.015 inch) higher than previous setup and adjust to match conditions.

Note: For heights of cut greater than 13 mm (0.500 inch), install the high height-of-cut kit.

Note: Use the following chart to determine which bedknife is best suited for the desired height of cut.

Recommended Bedknife/Height of Cut Chart		
Bedknife	**Part Number**	**Height of Cut**
Edgemax Micro-cut (Standard)	115-1880 (2100) 117-1530 (1800)	1.5 to 4.7 mm (0.062–0.188 inch)
Edgemax Tournament (Optional)	115-1881 (2100) 117-1532 (1800)	3.1 to 12.7 mm (0.125–0.500 inch)
Micro-cut (Optional)	93-4262 (2100) 98-7261 (1800)	1.5 to 4.7 mm (0.062–0.188 inch)
Tournament (Optional)	93-4263 (2100) 98-7260 (1800)	3.1 to 12.7 mm (0.125–0.500 inch)
Extended Micro-cut (Optional)	108-4303 (2100) 110-2300 (1800)	1.5 to 4.7 mm (0.062–0.188 inch)
Extended Tournament (Optional)	108-4302 (2100)	3.1 to 12.7 mm (0.125–0.500 inch)
Low-cut (Optional)	93-4264 (2100) 110-2301 (1800)	4.7 to 25.4 mm (0.188–1.00 inch)

1. Loosen the locknuts securing the height-of-cut arms to the cutting unit side plates (Figure 9).

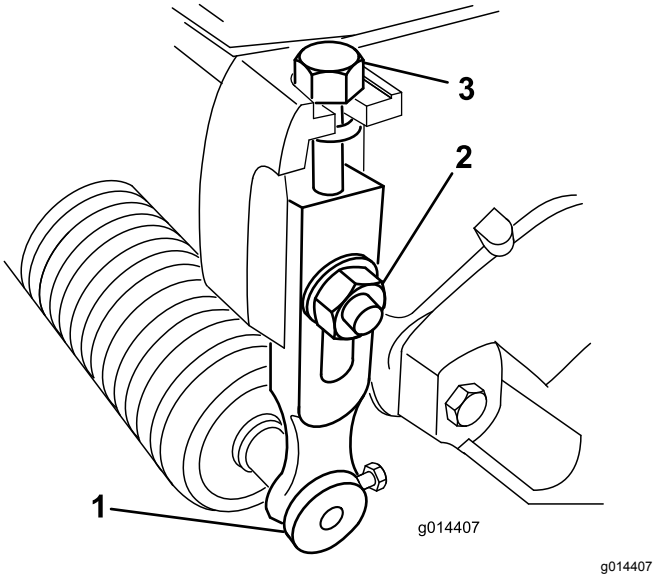

Figure 9

1. Height-of-cut arm
2. Locknut
3. Adjusting screw

2. Loosen the nut on the gauge bar and set the adjusting screw to the desired height of cut (Figure 10).

   Note: The distance between the bottom of the screw head and the face of bar is the height of cut.

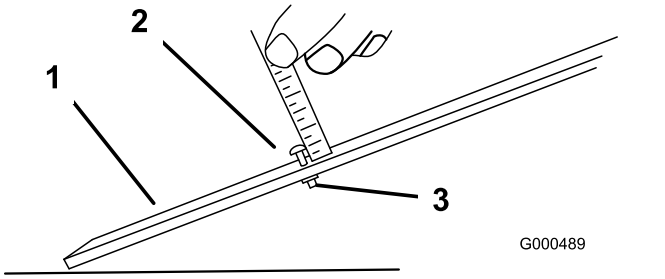

Figure 10

1. Gauge bar
2. Height adjusting screw
3. Nut

3. Hook the screw head onto the cutting edge of the bedknife and rest the rear end of the bar onto the rear of the roller (Figure 11).

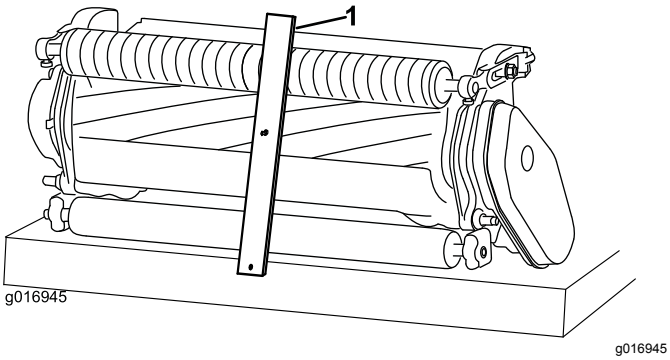

Figure 11

1. Gauge bar

4. Rotate the adjusting screw until the roller contacts the front of the gauge bar.
5. Adjust both ends of the roller until the entire roller is parallel to the bedknife.

   Important: **When set properly, the rear and front rollers contact the gauge bar and the screw is snug against the bedknife. This ensures that the height-of-cut is identical at both ends of the bedknife.**
6. Tighten the nuts to secure the adjustment enough to remove the play from the washer.

6

Adjusting the Cut-off Bar

No Parts Required

Procedure

Adjust the cut-off bar to ensure that the clippings are cleanly discharged from the reel area.

1. Loosen the screws securing the top bar (Figure 12) to the cutting unit.

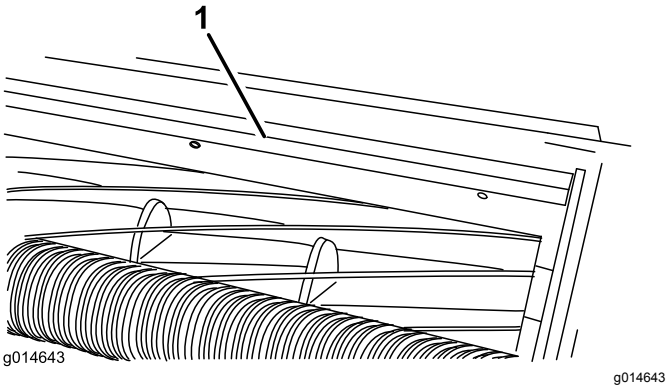

Figure 12

1. Cut-off bar

2. Insert a 1.5 mm (0.060 inch) feeler gauge between the top of the reel and the bar and tighten the screws.

   Important: **Ensure that the bar and reel are equal distance apart across the complete reel.**

   Note: You can adjust the bar to compensate for changes in turf conditions. Adjust the bar closer to the reel when the turf is extremely dry. By contrast, adjust the bar further away from the reel when the turf conditions are wet. The bar should be parallel to the reel to ensure optimum performance, and you should adjust it whenever you sharpen the reel on a reel grinder.

7

Preparing the Cutting Unit for Use on an eFlex Machine

Parts needed for this procedure:

1	Target plate
1	Weight rod (supplied with your traction unit)
1	Flange-head bolt (supplied with your traction unit)

Installing the Target Plate

- If you will be using the cutting unit on an eFlex traction unit, install the provided target plate, then adjust the machine sensors as described in the eFlex traction unit *Operator's Manual*.
- If you will be using the cutting unit on gasoline-powered machines, you do not need the target plate.
- If you will be using the cutting unit on both gasoline units and the eFlex machines, you can install the target plate and leave it installed regardless of which machine you use it on.

1. Set up and prepare the cutting unit as described in the cutting unit *Operator's Manual*.
2. Remove the center, grass-shield bolt (Figure 13).
3. Install the target plate to the top of the cutting unit (under the plastic cowling) using the bolt that you removed previously (Figure 13).

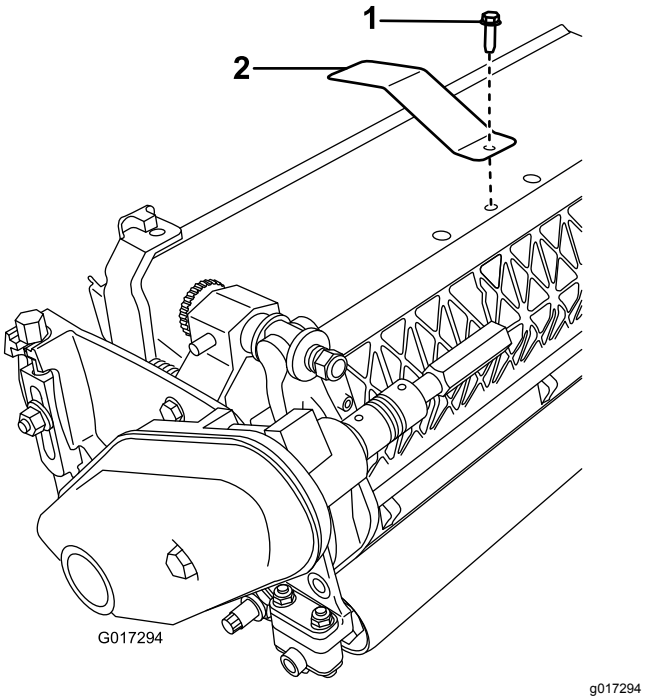

Figure 13

1. Center, grass-shield bolt 2. Target plate

Installing the Weight Rod

1. Enlarge the lower hole on the right side of the cutting unit using a 9 mm (23/64 inch) drill bit (Figure 14).



Figure 14

2. Lubricate the O-ring on the weight rod.
3. Insert the O-ring end of the weight rod into the previously drilled hole.
4. Secure the threaded end of the weight rod to the frame using a flange-head bolt (Figure 15).

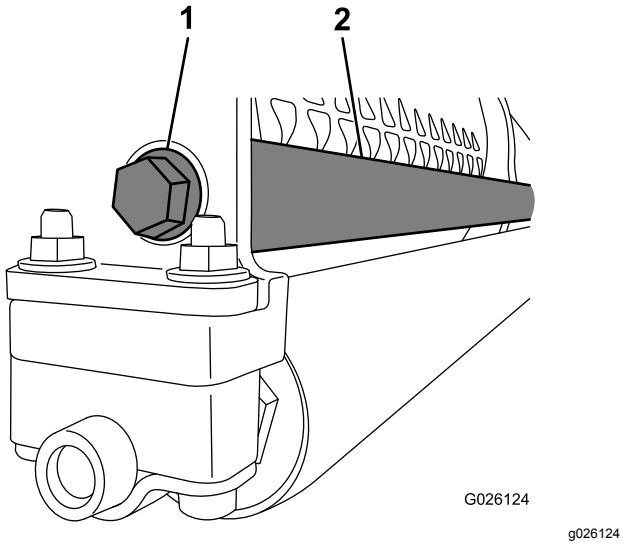

Figure 15

1. Flange-head bolt
2. Weight rod

8

Installing the Push Nut (CE Only)

Parts needed for this procedure:

1	Push nut

Procedure

1. Loosen the flange bolt securing the belt cover and remove the belt cover.
2. Slide the push nut onto the belt-cover plug (Figure 16).

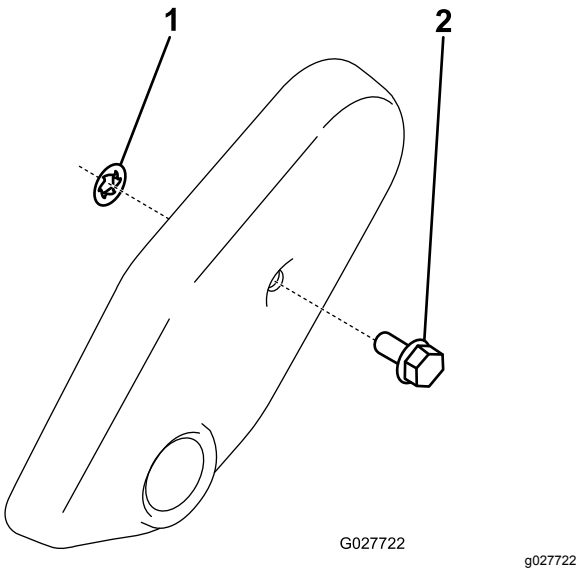

Figure 16

1. Push nut
2. Belt-cover plug

3. Install the belt cover.

Specifications

Tractors	These cutting units mount on the appropriate size Flex and eFlex Traction Units.
Cutting width	Flex/eFlex 1800—46 cm (18 inches;, Flex/eFlex 2100—53 cm (21 inches)
Height-of-cut	Cutting height is adjusted on the front roller by 2 vertical screws and held by 2 locking cap screws.
Height-of-cut range	Standard bench height-of-cut range is 1.6 mm (0.062 inch) to 12.7 mm (0.500 inch). The bench height of cut range with the High Height of Cut Kit installed is 7 mm (0.285 inch) to 25 mm (1.00 inch). Effective HOC may vary depending on turf conditions, type of bedknife, rollers and attachments installed.
Reel bearings	There are 2 sealed stainless steel, deep groove ball bearings.
Rollers	The front roller is 6.3 cm (2.5 inches) in diameter with a variety of configurations selected by the customer. The rear roller is a 5.1 cm (2 inch) diameter aluminum full roller.
Bedknife	The replaceable single edged, high-carbon steel bedknife is fastened to a machined cast iron bedbar with 13 screws (2100) or 11 screws (1800).
Bedknife adjustment	There is a dual screw adjustment to the reel; detents corresponding to 0.018 mm (0.0007 inch) bedknife movement for each indexed position.
Grass shield	The non-adjustable shield with adjustable cut-off bar improves grass discharge from the reel in wet conditions.
Counterweight	A cast iron weight mounted opposite to the drive line balances the cutting unit.
Net Weight, 2100 (without front roller)	11-Blade—32.2 kg (71 lb); 14-Blade—33.5 kg (74 lb)
Net Weight, 1800 (without front roller)	11-Blade—30.8 kg (68 lb); 14-Blade—32.2 kg (71 lb)

Attachments/Accessories

A selection of Toro approved attachments and accessories is available for use with the machine to enhance and expand its capabilities. Contact your Authorized Service Dealer or Distributor or go to www.Toro.com for a list of all approved attachments and accessories.

Operation

Note: Determine the left and right sides of the machine from the normal operating position.

The dual point bedknife-to-reel adjustment system incorporated in this cutting unit simplifies the adjustment procedure needed to deliver optimum mowing performance. The precise adjustment possible with the dual point/bedbar design gives the necessary control to provide a continual self-sharpening action-thus maintaining sharp cutting edges, ensuring good quality-of-cut, and greatly reducing the need for routine backlapping.

Adjusting the Bedknife to Reel Contact

Adjusting the Bedknife Daily

Prior to mowing each day, or as required, check each cutting unit to verify proper bedknife-to-reel contact. **This must be performed even though quality of cut is acceptable.**

1. Lower the cutting units onto a hard surface.
2. Shut off the machine as follows:
   - Gasoline units: Shut off the engine and disconnect the spark-plug wire.
   - Electric units: Turn off the machine and disconnect the battery connector (T-handle).
3. Slowly rotate the reel in a reverse direction, listening for reel-to-bedknife contact.
   - If no contact is evident, turn the bedbar adjusting screws clockwise (Figure 4), 1 click at a time, until you feel and hear light contact.

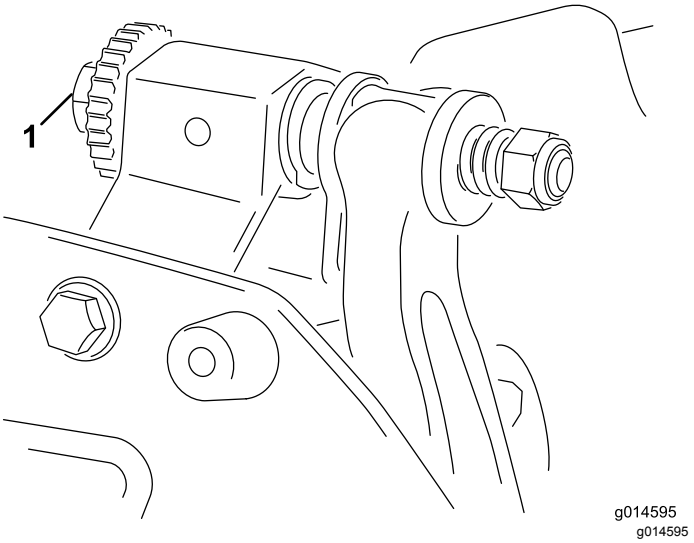

Figure 17

1. Bedbar adjusting screw

Note: The reel must cut one sheet of paper, when inserted at a right angle to the bedknife, at both ends and the center of the reel.

Note: The bedbar adjusting screws have detents corresponding to 0.018 mm (0.0007 inch) bedknife movement for each indexed position.

- If you feel excessive contact/reel drag, you need to backlap, reface the front of the bedknife, or regrind the cutting unit to achieve the sharp edges needed for precision cutting (Refer to the *Toro Manual for Sharpening Reel and Rotary Mowers*, Form No. 09168SL).

Important: **Light contact is preferred at all times. If you do not maintain light contact, the bedknife/reel edges will not sufficiently self-sharpen, and dull cutting edges will result after a period of operation. If you maintain excessive contact, bedknife/reel wear will be accelerated, uneven wear can result, and the quality of cut may decline.**

Note: For eFlex cutting units, the reel-to-bedknife contact has a significant impact on energy consumption. Very light contact is best for cutting performance and battery consumption.

Note: As the reel blades continue to run against the bedknife, a slight burr will appear on the front cutting edge surface along the full length of the bedknife. If you occasionally run a file across the front edge to remove this burr, this will improve the cutting performance.

After extended running, a ridge will eventually develop at both ends of the bedknife. Round

off these notches or file them flush with the cutting edge of the bedknife to ensure smooth operation.

Adjusting the Bedknife after Grinding, Backlapping, or Disassembly

Use this procedure after grinding, backlapping, or disassembling the reel. This **is not** a daily adjustment.

Note: For eFlex cutting units, the reel-to-bedknife contact has a significant impact on energy consumption. Very light contact is best for cutting performance and battery consumption.

1. Position the cutting unit on a flat, level work surface.
2. Tip the cutting unit to expose the bedknife and reel.

   Note: Ensure that the nuts on the back of the bedbar adjusting screws are not resting on the work surface (Figure 3).
3. Rotate the reel so that 1 of the blades crosses the bedknife edge between the first and second bedknife screw heads located on the right side of the cutting unit.
4. Make and identifying mark on the blade where it crosses the bedknife edge.

   Note: This will make later adjustments easier.
5. Insert a 0.05 mm (0.002 inch) shim between the blade and the bedknife edge at the point marked in step 4.
6. Turn the right bedbar adjusting screw (Figure 4) until you feel light pressure on the shim when sliding it side-to-side. Remove the shim.
7. For the left side of the cutting unit, slowly rotate the reel so that the closest blade crosses the bedknife edge between the first and second screw heads.
8. Repeat steps 4 through 6 for the left side of the cutting unit and left bedbar adjusting screw.
9. Repeat steps 5 and 6 until there is light pressure at the contact points on both the left and right sides of the cutting unit.
10. To obtain light contact between the reel and bedknife, turn each bedbar adjusting screw clockwise 3 click.

    Note: Each click on the bedbar adjusting screw moves the bedknife 0.018 mm (0.0007 inches). **Do not over tighten the adjusting screws.**

    Turning the adjusting screw clockwise moves the bedknife edge closer to the reel. Turning the adjusting screw counterclockwise moves the bedknife edge away from the reel.
11. Test the cutting performance by inserting a long strip of cutting performance paper between the reel and bedknife, perpendicular to the reel and bedknife (Figure 5). Slowly rotate the reel forward to cut the paper.

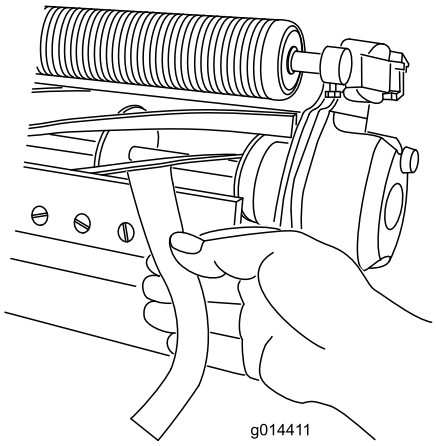

g014411

Figure 18

Note: If excessive contact/reel drag is evident, you may need to backlap or grind the reel and bedknife to achieve the sharp edges needed for precision cutting.

Adjusting the Clip Setting

There are 6 clip settings on the cutting unit that you can set to match your turf conditions. Start out setting the clip to match the height of cut, but then test the cutting unit and adjust the clip to obtain the quality of cut that you desire.

1. Shut off the machine as follows:
   - Gasoline units: Shut off the engine and disconnect the spark-plug wire.
   - Electric units: Turn off the machine and disconnect the battery connector (T-handle).
2. Loosen the flange bolt securing the belt cover and remove the belt cover to expose the belt (Figure 19).

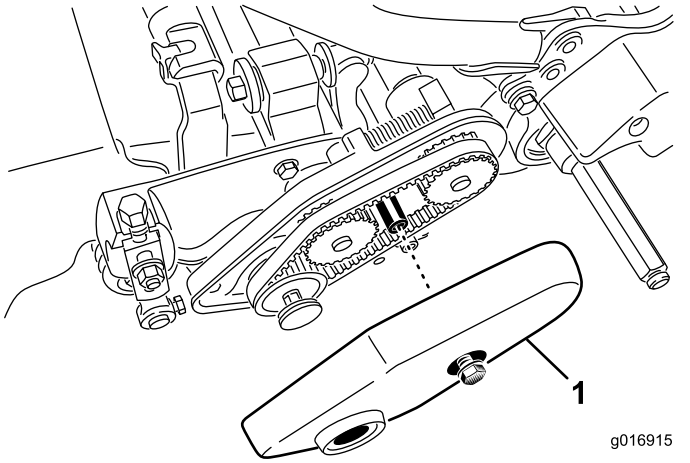

g016915

Figure 19

1. Belt cover

3. Loosen the bearing-housing nut (Figure 20).

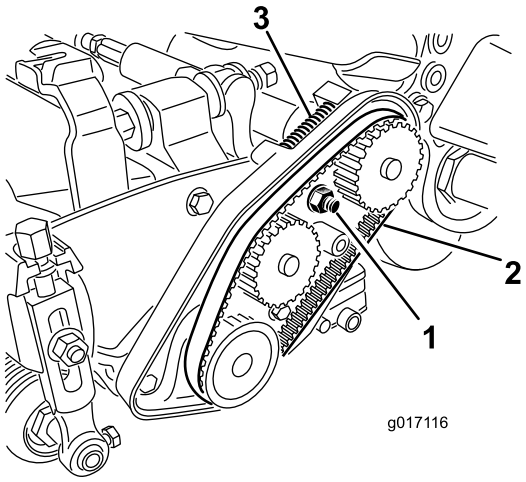

g017116

Figure 20

1. Bearing-housing nut
2. Reel drive belt
3. Compression spring

4. Using a 16 mm (5/8 inch) wrench, rotate the bearing housing to make sure it operates freely.
5. Remove the belt (Figure 20).
6. Using the chart shown on the decal in Figure 21, determine the clip setting you want and which pulleys you will need to move.

   Note: Each pulley is numbered (22, 24, and 25). Move the pulleys to the positions indicated in the chart for your clip setting.

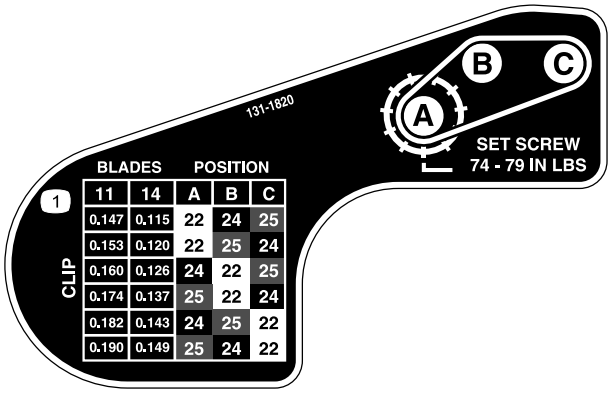

Figure 21

7. Loosen the 2 set screws on each pulley you need to move using a hex wrench.
8. Remove each pulley.
9. Install each pulley in the new configuration as indicated on the decal (Figure 21).

   Note: Ensure that the setscrews on each pulley are positioned to align with the key and flat area on the shaft.
10. Torque the setscrews to 8.3 to 8.9 N-m (74 to 79 in-lb).
11. Install the belt.
12. Ensure that the compression spring is applying tension to the belt (Figure 20).
13. Tighten the bearing-housing nut.
14. Install the belt cover.

Maintenance

Note: Determine the left and right sides of the machine from the normal operating position.

Servicing the Bedbar

Removing the Bedbar

1. Turn the bedbar adjusting screw, counterclockwise, to back the bedknife away from the reel (Figure 22).

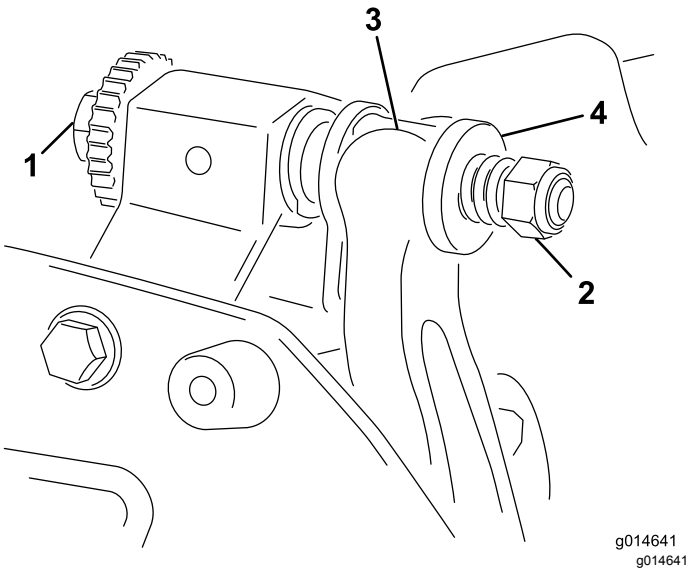

Figure 22

1. Bedbar adjusting screw
2. Spring tension nut
3. Bedbar
4. Washer

2. Back out the spring tension nut, until the washer is no longer tensioned against the bedbar (Figure 22).
3. On each side of the machine, loosen the locknut securing the bedbar bolt (Figure 23).

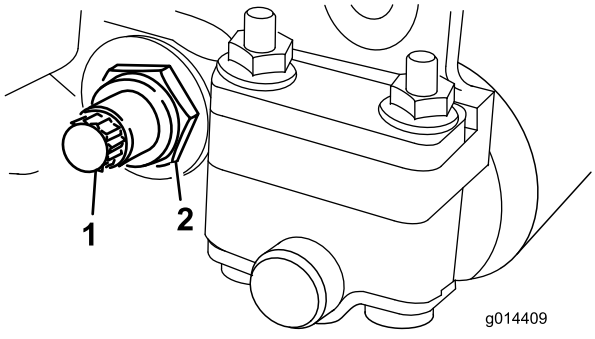

Figure 23

1. Bedbar bolt
2. Lock nut

4. Remove each bedbar bolt allowing the bedbar to be pulled downward and removed from the machine bolt (Figure 23).

   Account for the 2 nylon and 2 stamped steel washers on each end of the bedbar (Figure 24).

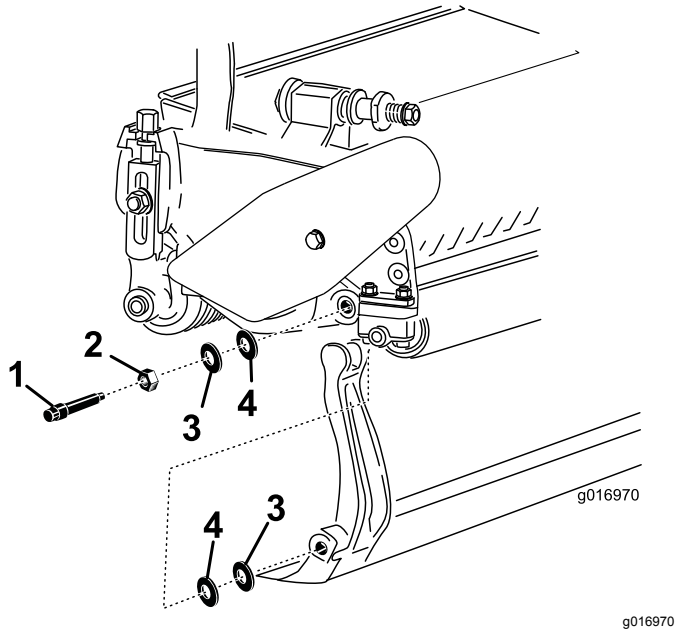

Figure 24

1. Bedbar bolt
2. Nut
3. Steel washer
4. Nylon washer

Assembling the Bedbar

1. Install the bedbar, positioning the mounting ears between the washer and bedbar adjuster.
2. Secure the bedbar to each side plate with the bedbar bolts (nuts on bolts) and 4 washers (8 total).
3. Position a nylon washer on each side of the side plate boss. Place a steel washer outside each of the nylon washers (Figure 24).
4. Torque the bedbar bolts to 27 to 36 N·m (240 to 320 inch-lb). Tighten the locknuts by hand until the outside steel washer stops rotating and there is no end play. The washers on the inside may have a gap.

   Important: **Do not overtighten the locknuts or they will deflect the side plates.**
5. Tighten the spring tension nut until the spring is collapsed, then back it off 1/2 turn (Figure 25).

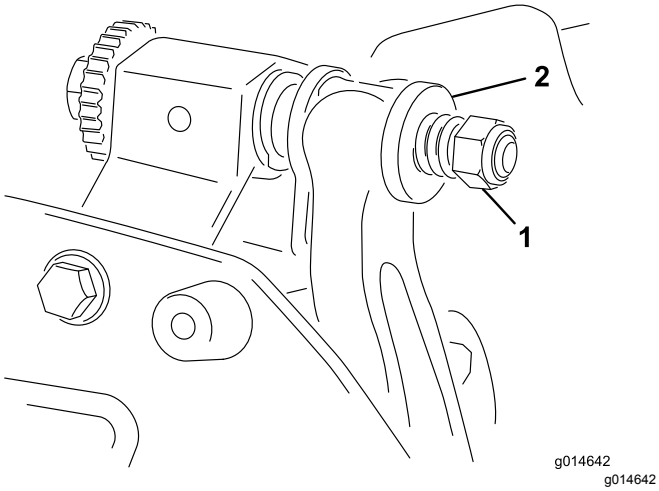

Figure 25

1. Spring tension nut
2. Spring

Backlapping the Reel

⚠ DANGER

Contact with the reel or other moving parts can result in personal injury.

Keep your fingers, hands, and clothing away from the reels or other moving parts.

- **Stay away from the reel while backlapping.**
- **Never use a short handled paint brush for backlapping. Handle assembly parts are available from your local authorized Toro distributor.**

You can backlap the reels either by leaving the cutting unit on the traction unit or removing the cutting unit completely from the traction unit. If the cutting unit is left on the traction unit, move the hex coupler between the main drive and cutting unit drive to the decoupled position to prevent excessive wear to the reel brake.

1. Position the machine on a clean, level surface.
2. Shut off the machine as follows:
   - Gasoline units: shut off the engine and disconnect the spark-plug wire.
   - Electric units: turn off the machine and disconnect the battery connector (T-handle).
3. Engage the parking brake.
4. Connect the backlapping machine to the cutting unit by connecting a 1/2 inch hex socket to the reel pulley output shaft on the left side of the cutting unit.

   Note: Additional instructions and procedures on Backlapping are available in the *Toro Sharpening Reel and Rotary Mowers Manual* (Form No. 80-300PT).

   Note: For a better cutting edge, run a file across the front face of the bedknife when the lapping operation is completed. This removes any burrs or rough edges that may have built up on the cutting edge. A very light file touch may be necessary on the top edge to break the burr off completely from the cutting edge.

   Note: If the cutting unit was left attached to the machine during backlapping, couple the hex shaft of the machine back to the cutting unit.

Notes:

Notes:

Declaration of Incorporation

The Toro Company, 8111 Lyndale Ave. South, Bloomington, MN, USA declares that the following unit(s) conform(s) to the directives listed, when installed in accordance with the accompanying instructions onto certain Toro models as indicated on the relevant Declarations of Conformity.

Model No.	Serial No.	Product Description	Invoice Description	General Description	Directive
04251	314000001 and Up	11-Blade Cutting Unit, Greensmaster Flex/eFlex 2100 Traction Unit	11 BLADE-FLEX 2100	Lawn Mower	2006/42/EC
04252	314000001 and Up	14-Blade Cutting Unit, Greensmaster Flex/eFlex 2100 Traction Unit	14 BLADE-FLEX 2100	Lawn Mower	2006/42/EC
04253	314000001 and Up	11-Blade Cutting Unit, Greensmaster Flex/eFlex 1800 Traction Unit	11 BLADE-FLEX 1800	Lawn Mower	2006/42/EC
04254	314000001 and Up	14-Blade Cutting Unit, Greensmaster Flex/eFlex 1800 Traction Unit	14 BLADE-FLEX 1800	Lawn Mower	2006/42/EC

Relevant technical documentation has been compiled as required per Part B of Annex VII of 2006/42/EC.

We will undertake to transmit, in response to requests by national authorities, relevant information on this partly completed machinery. The method of transmission shall be electronic transmittal.

This machinery shall not be put into service until incorporated into approved Toro models as indicated on the associated Declaration of Conformity and in accordance with all instructions, whereby it can be declared in conformity with all relevant Directives.

Certified:



David Klis
Sr. Engineering Manager
8111 Lyndale Ave. South
Bloomington, MN 55420, USA
June 15, 2015

Authorized Representative:

Marcel Dutrieux
Manager European Product Integrity
Toro Europe NV
Nijverheidsstraat 5
2260 Oevel
Belgium

Tel. +32 16 386 659

The Toro Total Coverage Guarantee

A Limited Warranty

Conditions and Products Covered

The Toro Company and its affiliate, Toro Warranty Company, pursuant to an agreement between them, jointly warrant your Toro Commercial product ("Product") to be free from defects in materials or workmanship for two years or 1500 operational hours*, whichever occurs first. This warranty is applicable to all products with the exception of Aerators (refer to separate warranty statements for these products). Where a warrantable condition exists, we will repair the Product at no cost to you including diagnostics, labor, parts, and transportation. This warranty begins on the date the Product is delivered to the original retail purchaser.
* Product equipped with an hour meter.

Instructions for Obtaining Warranty Service

You are responsible for notifying the Commercial Products Distributor or Authorized Commercial Products Dealer from whom you purchased the Product as soon as you believe a warrantable condition exists. If you need help locating a Commercial Products Distributor or Authorized Dealer, or if you have questions regarding your warranty rights or responsibilities, you may contact us at:

Toro Commercial Products Service Department
Toro Warranty Company
8111 Lyndale Avenue South
Bloomington, MN 55420-1196

952–888–8801 or 800–952–2740
E-mail: commercial.warranty@toro.com

Owner Responsibilities

As the Product owner, you are responsible for required maintenance and adjustments stated in your *Operator's Manual*. Failure to perform required maintenance and adjustments can be grounds for disallowing a warranty claim.

Items and Conditions Not Covered

Not all product failures or malfunctions that occur during the warranty period are defects in materials or workmanship. This warranty does not cover the following:

- Product failures which result from the use of non-Toro replacement parts, or from installation and use of add-on, or modified non-Toro branded accessories and products. A separate warranty may be provided by the manufacturer of these items.
- Product failures which result from failure to perform recommended maintenance and/or adjustments. Failure to properly maintain your Toro product per the Recommended Maintenance listed in the *Operator's Manual* can result in claims for warranty being denied.
- Product failures which result from operating the Product in an abusive, negligent, or reckless manner.
- Parts subject to consumption through use unless found to be defective. Examples of parts which are consumed, or used up, during normal Product operation include, but are not limited to, brake pads and linings, clutch linings, blades, reels, rollers and bearings (sealed or greasable), bed knives, spark plugs, castor wheels and bearings, tires, filters, belts, and certain sprayer components such as diaphragms, nozzles, and check valves, etc.
- Failures caused by outside influence. Conditions considered to be outside influence include, but are not limited to, weather, storage practices, contamination, use of unapproved fuels, coolants, lubricants, additives, fertilizers, water, or chemicals, etc.
- Failure or performance issues due to the use of fuels (e.g. gasoline, diesel, or biodiesel) that do not conform to their respective industry standards.
- Normal noise, vibration, wear and tear, and deterioration.
- Normal "wear and tear" includes, but is not limited to, damage to seats due to wear or abrasion, worn painted surfaces, scratched decals or windows, etc.

Parts

Parts scheduled for replacement as required maintenance are warranted for the period of time up to the scheduled replacement time for that part. Parts replaced under this warranty are covered for the duration of the original product warranty and become the property of Toro. Toro will make the final decision whether to repair any existing part or assembly or replace it. Toro may use remanufactured parts for warranty repairs.

Deep Cycle and Lithium-Ion Battery Warranty:

Deep cycle and Lithium-Ion batteries have a specified total number of kilowatt-hours they can deliver during their lifetime. Operating, recharging, and maintenance techniques can extend or reduce total battery life. As the batteries in this product are consumed, the amount of useful work between charging intervals will slowly decrease until the battery is completely worn out. Replacement of worn out batteries, due to normal consumption, is the responsibility of the product owner. Battery replacement may be required during the normal product warranty period at owner's expense. Note: (Lithium-Ion battery only): A Lithium-Ion battery has a part only prorated warranty beginning year 3 through year 5 based on the time in service and kilowatt hours used. Refer to the *Operator's Manual* for additional information.

Maintenance is at Owner's Expense

Engine tune-up, lubrication, cleaning and polishing, replacement of filters, coolant, and completing recommended maintenance are some of the normal services Toro products require that are at the owner's expense.

General Conditions

Repair by an Authorized Toro Distributor or Dealer is your sole remedy under this warranty.

Neither The Toro Company nor Toro Warranty Company is liable for indirect, incidental or consequential damages in connection with the use of the Toro Products covered by this warranty, including any cost or expense of providing substitute equipment or service during reasonable periods of malfunction or non-use pending completion of repairs under this warranty. Except for the Emissions warranty referenced below, if applicable, there is no other express warranty. All implied warranties of merchantability and fitness for use are limited to the duration of this express warranty.

Some states do not allow exclusions of incidental or consequential damages, or limitations on how long an implied warranty lasts, so the above exclusions and limitations may not apply to you. This warranty gives you specific legal rights, and you may also have other rights which vary from state to state.

Note regarding engine warranty:

The Emissions Control System on your Product may be covered by a separate warranty meeting requirements established by the U.S. Environmental Protection Agency (EPA) and/or the California Air Resources Board (CARB). The hour limitations set forth above do not apply to the Emissions Control System Warranty. Refer to the Engine Emission Control Warranty Statement supplied with your product or contained in the engine manufacturer's documentation for details

Countries Other than the United States or Canada

Customers who have purchased Toro products exported from the United States or Canada should contact their Toro Distributor (Dealer) to obtain guarantee policies for your country, province, or state. If for any reason you are dissatisfied with your Distributor's service or have difficulty obtaining guarantee information, contact the Toro importer.