Form No. 3416-518 Rev A

TORO®

Count on it.

Parts Catalog

# Workman® GTX

## Electric Utility Vehicle with Bucket Seat

**Model No. 07043—Serial No. 401160341 and Up**

Register at www.Toro.com.
Original Instructions (EN)

*3416-518* A

# Ordering Replacement Parts

To order replacement parts, please supply the part number, the quantity, and the description of each part desired.

### Understanding Reference Numbers

Each identified part in an illustration has a reference number. The reference number for a part also appears in the parts list, along with other information about the part.

This catalog uses two special reference number formats, one to indicate parts in a service assembly and another to indicate the quantity of a given part in an illustration.

### Service Assembly Reference Numbers

Parts in service assemblies have reference numbers in the form a:b. The a represents the reference number of the entire service assembly and the b represents a sequential number unique to each part within the service assembly.

For example, a wheel assembly might be identified by reference number 6, the tire by 6:1, the valve by 6:2, and the wheel by 6:3. When you order the assembly identified by reference number 6, you receive all parts identified by reference numbers 6:1,6:2, and 6:3. However, you may also order any part individually. Reference numbers of this type appear in illustration and in parts lists.

### Reference Numbers Indicating Quantity

In an illustration, if a reference number indicates more than one part, the reference number has the form nX y. The n represents the quantity of the part, the X is the multiplication symbol, and the y represents the reference number.

For example, in an illustration, the reference number 2X 37 means that two of the parts identified by reference number 37 are indicated.

# Contents

Front Frame and Suspension Assembly . . . . . 4
Floor Plate and Rear Suspension Mount Assembly . . . . . 5
Rear Frame and Suspension Assembly . . . . . 6
Frame Mount and Rear Shock/Spring Assembly . . . . . 7
Brake Assembly . . . . . 8
Master Cylinder Assembly No. 104-6782 . . . . . 9
Brake Caliper Assembly No. 127-7424 . . . . . 10
Steering Assembly . . . . . 11
Pedal and Control Assembly . . . . . 12
Hood and Fender Assembly . . . . . 13
Dash Assembly . . . . . 14
Seatbase Assembly . . . . . 15
Cargo Bed Assembly . . . . . 16
Cargo Bed and Tailgate Assembly No. 131-8592 . . . . . 17
Battery Assembly . . . . . 18
Rear Axle and Motor Assembly . . . . . 19
Transaxle Assembly No. 136-6340 . . . . . 20
Electric Motor Assembly No. 131-8485 . . . . . 21
Controller Assembly . . . . . 22
Sevcon Controller Assembly No. 127-2767 . . . . . 24
Onboard Charger Assembly No. 131-8490 . . . . . 25
Accelerator Pedal and Key Switch Assembly . . . . . 26
Attachments and Accessories . . . . . 27

**© 2017—The Toro® Company**
**8111 Lyndale Avenue South**
**Bloomington, MN 55420**



**Contact us at www.Toro.com.**
**Printed in the USA.**
**All Rights Reserved**

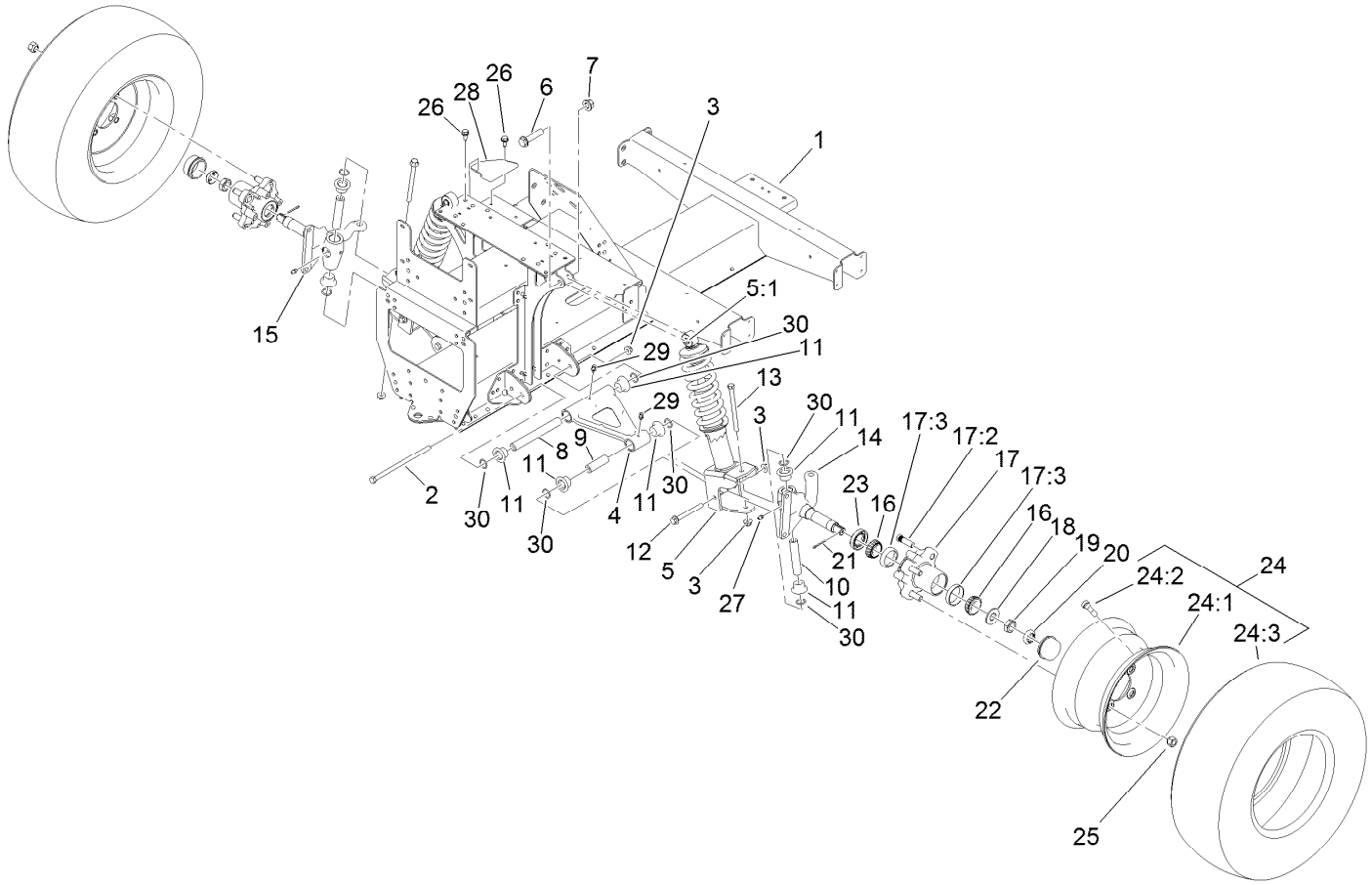


# Front Frame and Suspension Assembly

| Ref. | Part Number | Qty. | Description |
|---|---|---|---|
| 1 | 127-7718-03 | 1 | Frame-Front |
| 2 | 131-8572 | 2 | Screw-HF |
| 3 | 104-8301 | 6 | Nut-HF, NI |
| 4 | 131-8345 | 2 | A-Arm |
| 5 | 127-8776 | 2 | Strut ASM |
| 5:1 | 131-8574 | 1 | Isolator-Shock |
| 6 | 3234-46 | 2 | Screw-HHF |
| 7 | 99-5107 | 2 | Nut-Lock |
| 8 | 131-8581 | 2 | Sleeve-Control Arm, Inner |
| 9 | 131-8583 | 2 | Sleeve-Control Arm, Outer |
| 10 | 131-8582 | 2 | Sleeve-Kingpin |
| 11 | 133-0643 | 12 | Bushing-Flange, O-Ring |
| 12 | 116-4701 | 2 | Screw-HHF |
| 13 | 131-8571 | 2 | Screw-HF |
| 14 | 127-8825-03 | 1 | Spindle-LH |
| 15 | 127-8826-03 | 1 | Spindle-RH |
| 16 | 254-94 | 4 | Bearing-Cone, Tapered |
| 17 | 127-8851 | 2 | Front Hub ASM |

| Ref. | Part Number | Qty. | Description |
|---|---|---|---|
| 17:2 | 10-6830 | 4 | Stud-Type, Drive |
| 17:3 | 254-72 | 2 | Bearing-Cup, Tapered |
| 18 | 93-0309 | 2 | Washer-Tab |
| 19 | 3220-7 | 2 | Nut-Jam |
| 20 | 93-0307 | 2 | Nut-Lock, Retainer |
| 21 | 3272-12 | 2 | Pin-Cotter |
| 22 | 241-119 | 2 | Cap-Dust |
| 23 | 112-1690 | 2 | Seal-Oil |
| 24 | 131-8319 | 2 | Tire/Wheel ASM |
| 24:1 | 131-8317 | 1 | Wheel |
| 24:2 | 232-27 | 1 | Stem-Valve |
| 24:3 | 131-8318 | 1 | Tire |
| 25 | 242-50 | 8 | Nut-Lug |
| 26 | 32144-70 | 2 | Screw-HWHTF |
| 27 | 302-5 | 2 | Fitting-Grease |
| 28 | 131-8339-03 | 1 | Reinforcement-Tower |
| 29 | 302-40 | 4 | Fitting-Grease, 90 DEG |
| 30 | 237-54 | 12 | O-Ring |

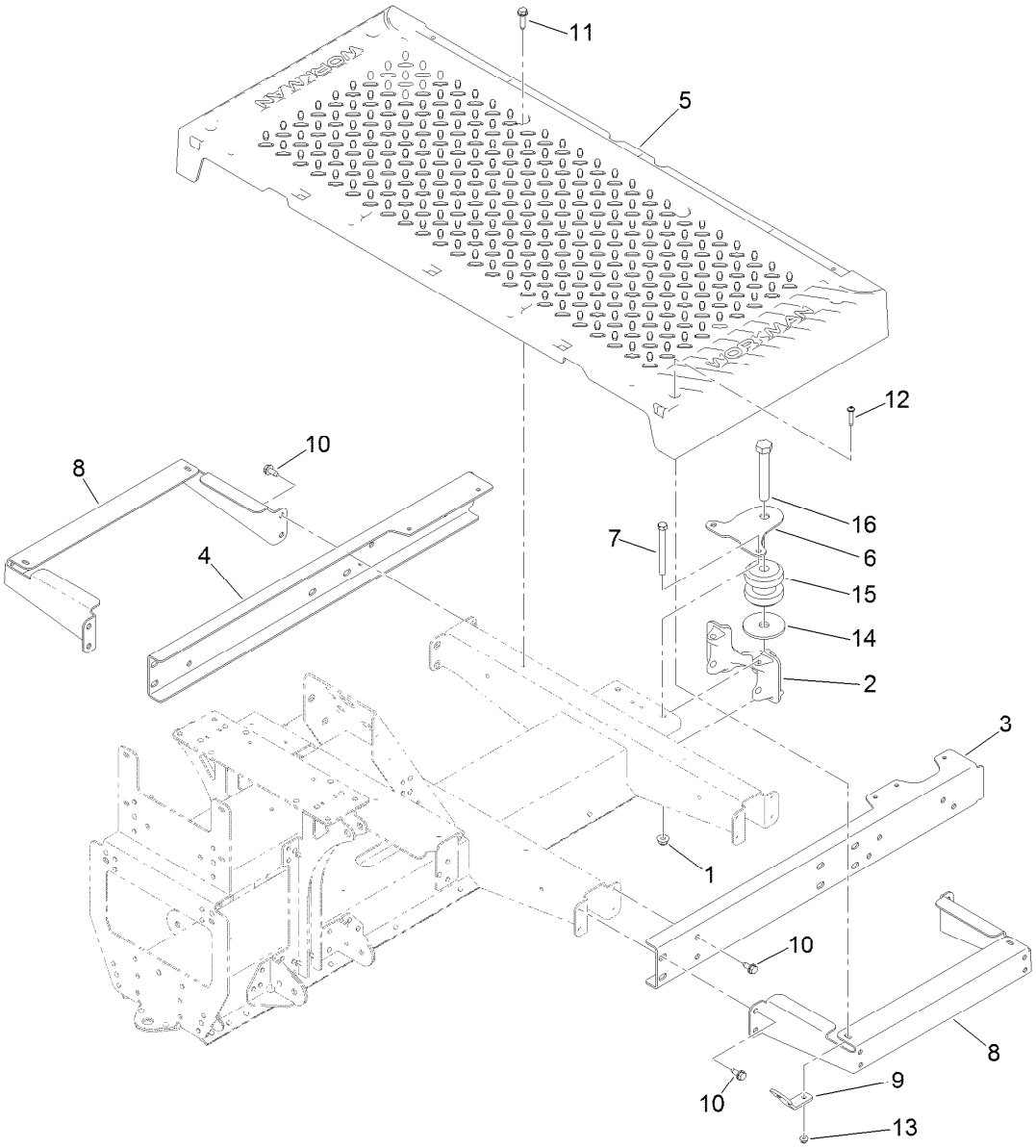


# Floor Plate and Rear Suspension Mount Assembly

| Ref. | Part Number | Qty. | Description |
|---|---|---|---|
| 1 | 104-8301 | 2 | Nut-HF, NI |
| 2 | 131-8466 | 1 | Mount-Suspension, Rear |
| 3 | 127-7820-03 | 1 | Channel-Frame, Front (LH) |
| 4 | 127-7821-03 | 1 | Channel-Frame, Front (RH) |
| 5 | 127-7829 | 1 | Plate-Floor |
| 6 | 131-8597 | 1 | Plate-Gimbal, Upper |
| 7 | 323-42 | 2 | Screw-HH |
| 8 | 127-7837-03 | 2 | Bracket-Support, Floor Plate |

| Ref. | Part Number | Qty. | Description |
|---|---|---|---|
| 9 | 127-7832 | 2 | Bracket-Angle |
| 10 | 32144-70 | 16 | Screw-HWHTF |
| 11 | 32144-49 | 4 | Screw-HWHTF |
| 12 | 132-6777 | 4 | Screw-TTH |
| 13 | 104-7201 | 4 | Nut-HF |
| 14 | 110-4549 | 1 | Washer-Snubbing |
| 15 | 131-8480 | 1 | Isolator |
| 16 | 104-5877 | 1 | Screw-HH |

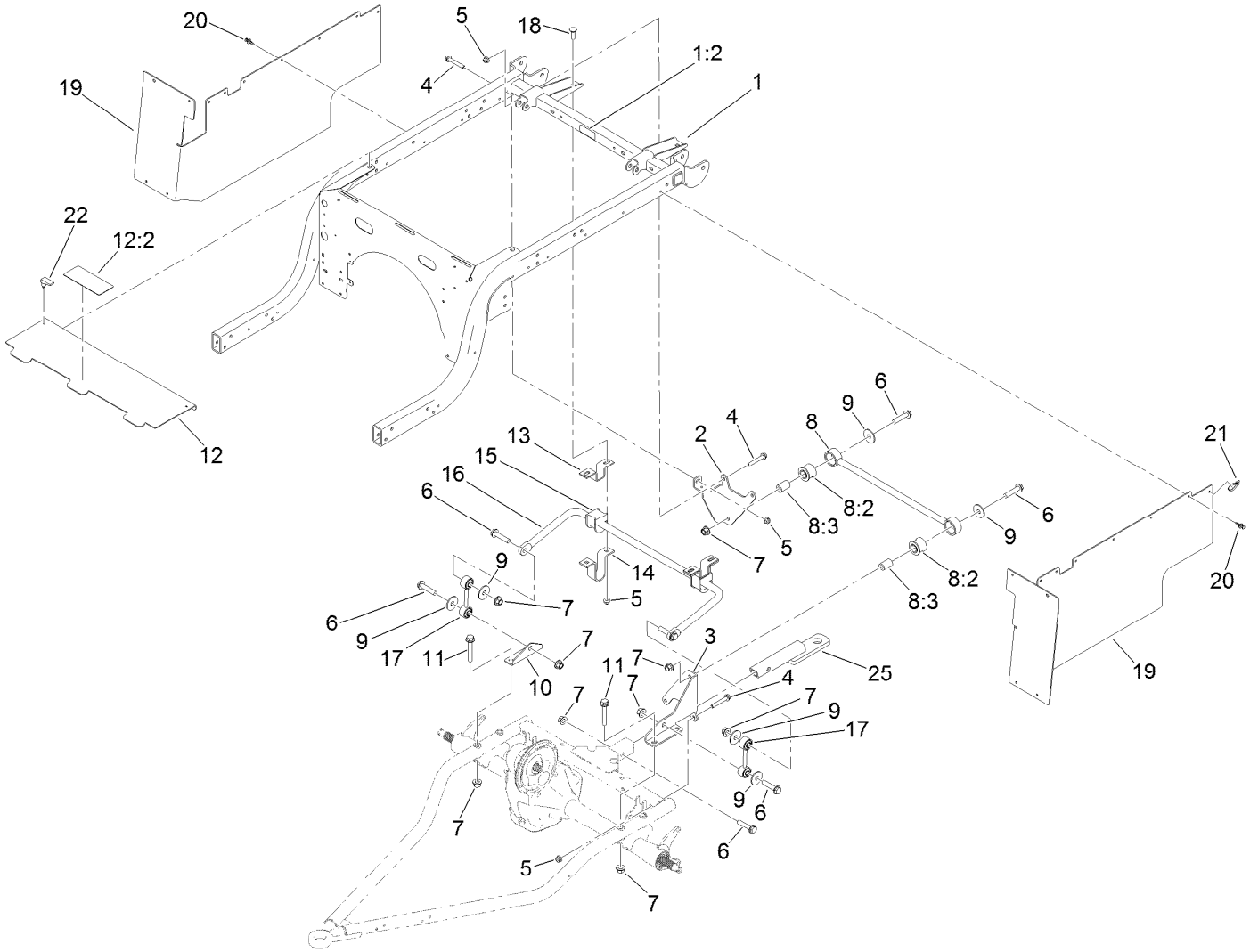


# Rear Frame and Suspension Assembly

| Ref. | Part Number | Qty. | Description |
|---|---|---|---|
| 1 | 131-8594 | 1 | Rear Frame ASM |
| 1:2 | 115-2047 | 1 | Decal-Surface, Hot |
| 2 | 127-7412-03 | 1 | Bracket-Bar, Stabilizer |
| 3 | 127-7411-03 | 1 | Bracket-Bar, Stabilizer |
| 4 | 3234-39 | 5 | Screw-HHF |
| 5 | 104-8301 | 9 | Nut-HF, NI |
| 6 | 3234-46 | 7 | Screw-HHF |
| 7 | 99-5107 | 11 | Nut-Lock |
| 8 | 109-5013 | 1 | Panhard Rod ASM |
| 8:2 | 109-5009 | 2 | Bushing-Suspension, Rubber |
| 8:3 | 109-5010 | 2 | Spacer |
| 9 | 86-1990 | 6 | Washer-Thrust |
| 10 | 131-8315 | 1 | Bracket-Link, Sway Bar |

| Ref. | Part Number | Qty. | Description |
|---|---|---|---|
| 11 | 3234-40 | 4 | Screw-HF |
| 12 | 131-8595 | 1 | Panel-Cover |
| 12:2 | 99-7345 | 1 | Decal-Warning |
| 13 | 87-3890-03 | 2 | Bracket-Bar, Sway |
| 14 | 87-4010-03 | 2 | Clamp-Bar, Sway |
| 15 | 87-3910 | 2 | Bushing-Rubber |
| 16 | 131-8310-03 | 1 | Bar-Sway, Anti |
| 17 | 131-8394 | 2 | Link-Bar, Sway |
| 18 | 3231-25 | 4 | Bolt-CARR |
| 19 | 131-8346 | 2 | Panel-Side |
| 20 | 125-9622 | 20 | Rivet-Blind |
| 21 | 3290-378 | 2 | Tie-Cable |
| 22 | 74-5950 | 2 | Latch-Swell |
| 25 | 132-8590-03 | 1 | Bar-Draw, Class 1 |

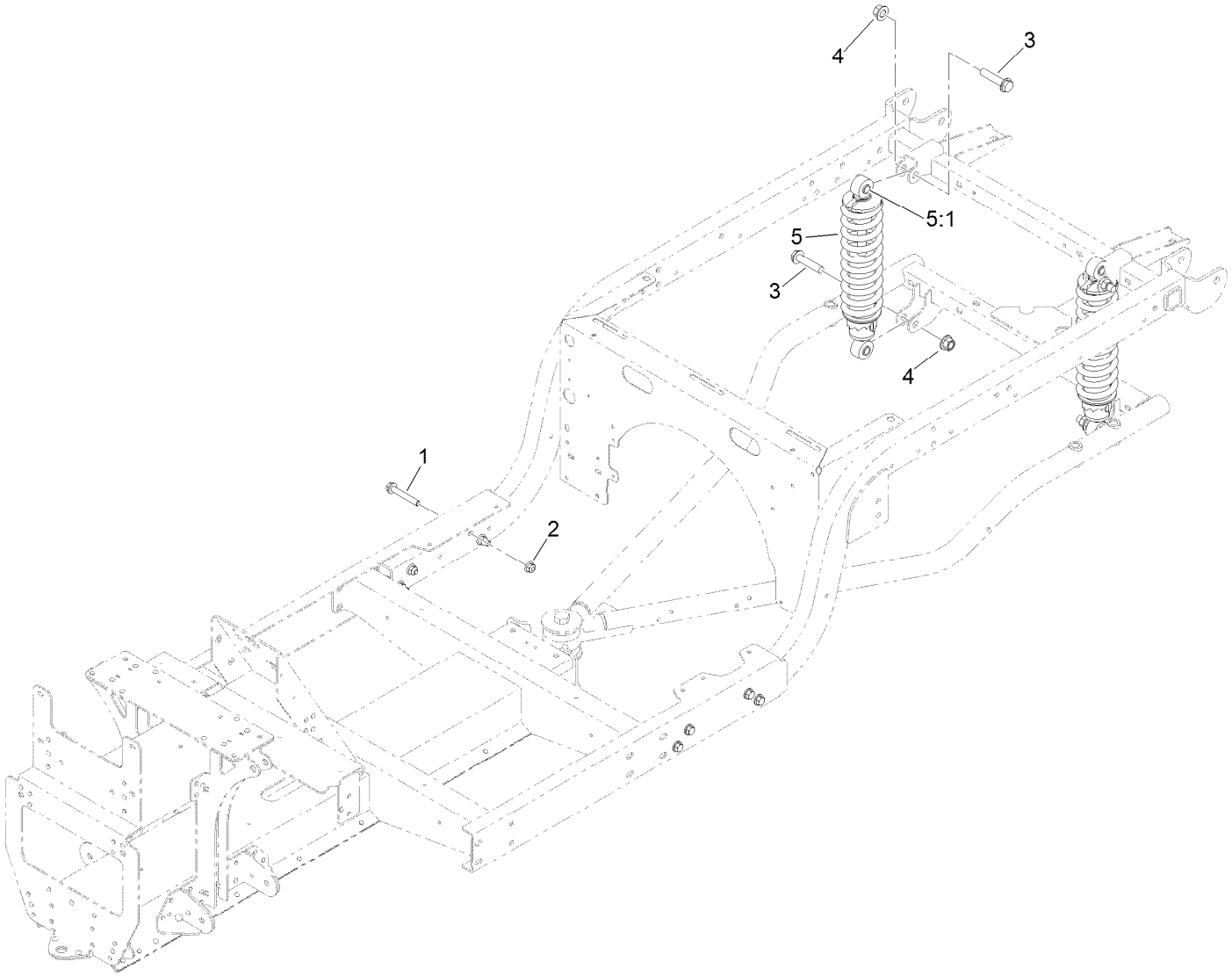


# Frame Mount and Rear Shock/Spring Assembly

| *Ref.* | *Part Number* | *Qty.* | *Description* |
|---|---|---|---|
| 1 | 3234-39 | 8 | Screw-HHF |
| 2 | 104-8301 | 8 | Nut-HF, NI |
| 3 | 3234-46 | 4 | Screw-HHF |
| 4 | 99-5107 | 4 | Nut-Lock |
| 5 | 131-3455 | 2 | Shock/Spring ASM |
| 5:1 | 131-8574 | 2 | Isolator-Shock |

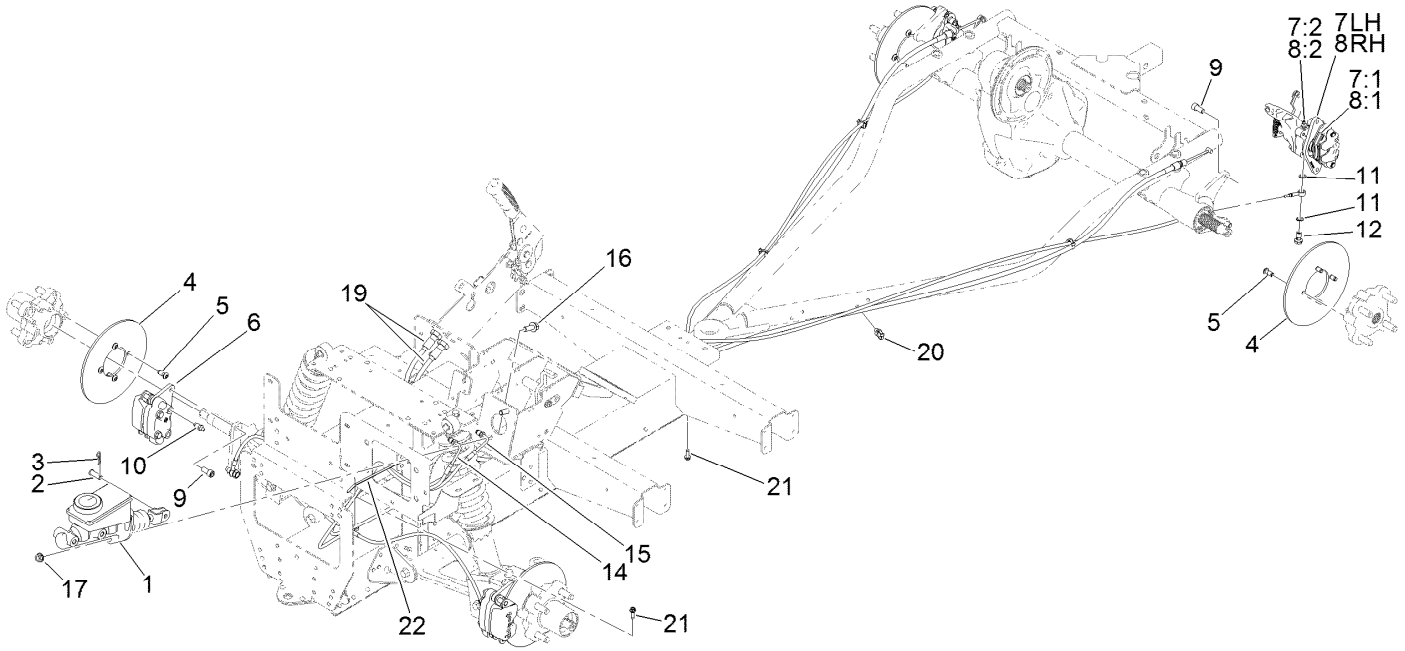


# Brake Assembly

| Ref. | Part Number | Qty. | Description |
|---|---|---|---|
| 1 | 104-6782 | 1 | Master Cylinder ASM |
| 2 | 283-2 | 1 | Pin-Clevis |
| 3 | 1-806003 | 1 | Pin-Cotter |
| 4 | 136-6295 | 4 | Rotor-Brake |
| 5 | 121-9671 | 16 | Screw-HSBH |
| 6 | 127-7424 | 2 | Brake Caliper ASM |
| 7 | 131-8313 | 1 | Caliper-Rear, LH |
| 7:1 | 131-8518 | 1 | Pad Kit (Set Of 4) |
| 7:2 | 119-9509 | 1 | Screw-Bleed |
| 7:3 | 136-6328 | 2 | Spring-Rattle, Anti ● |
| 8 | 131-8314 | 1 | Caliper-Rear, RH |
| 8:1 | 131-8518 | 1 | Pad Kit (Set Of 4) |
| 8:2 | 119-9509 | 1 | Screw-Bleed |

| Ref. | Part Number | Qty. | Description |
|---|---|---|---|
| 8:3 | 136-6328 | 2 | Spring-Rattle, Anti ● |
| 9 | 131-8573 | 8 | Screw-HSH |
| 10 | 119-9509 | 2 | Screw-Bleed |
| 11 | 115-2341 | 8 | Washer-Banjo |
| 12 | 120-4875 | 4 | Bolt-Flange, Banjo |
| 14 | 127-7781 | 1 | Brake Line-Front |
| 15 | 127-7782 | 1 | Brake Line-Rear |
| 16 | 3234-11 | 2 | Screw-HHF |
| 17 | 3290-357 | 2 | Nut-HHF, Whiz |
| 19 | 131-8406 | 2 | Cable-Park Brake |
| 20 | 32180-030 | 4 | Clip-Tie |
| 21 | 49-2040 | 2 | Screw-HWHTF |
| 22 | 3290-378 | 1 | Tie-Cable |

● Not illustrated

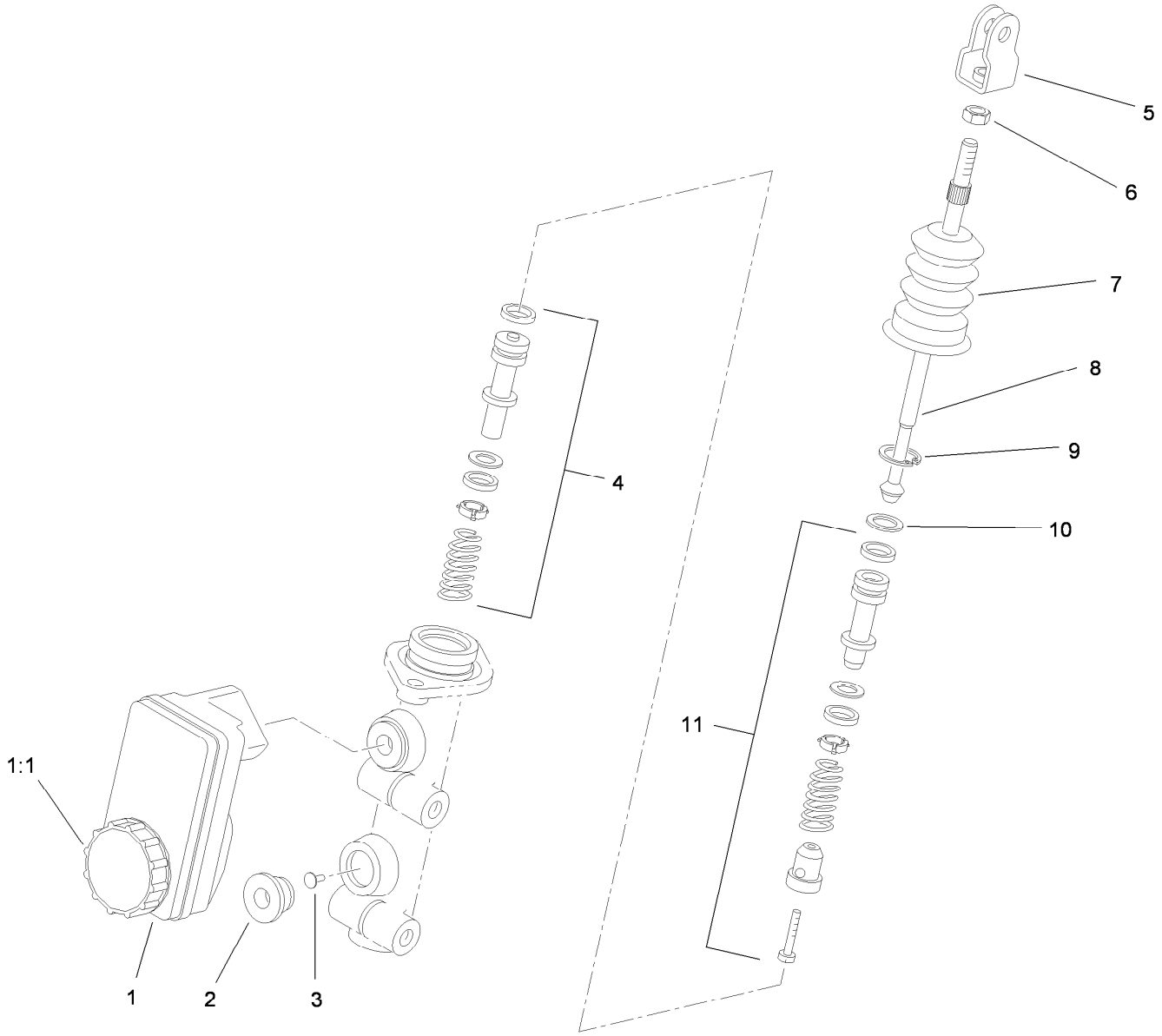


# Master Cylinder Assembly No. 104-6782

| *Ref.* | *Part Number* | *Qty.* | *Description* |
|---|---|---|---|
| 1 | 104-6845 | 1 | Reservoir ASM |
| 1:1 | 92-4112 | 1 | Cap ASM |
| 2 | 93-8971 | 2 | Seal-Port, Flange |
| 3 | 92-4103 | 1 | Pin-Stop |
| 4 | 92-4102 | 1 | Secondary Piston ASM |
| 5 | 92-4110 | 1 | Clevis |
| 6 | 21-0360 | 1 | Nut-Hex |
| 7 | 94-5209 | 1 | Cover-Dust |
| 8 | 94-5210 | 1 | Rod-Push |
| 9 | 92-4109 | 1 | Ring-Snap |
| 10 | 92-4108 | 1 | Retainer-Washer |
| 11 | 92-4101 | 1 | Primary Piston ASM |

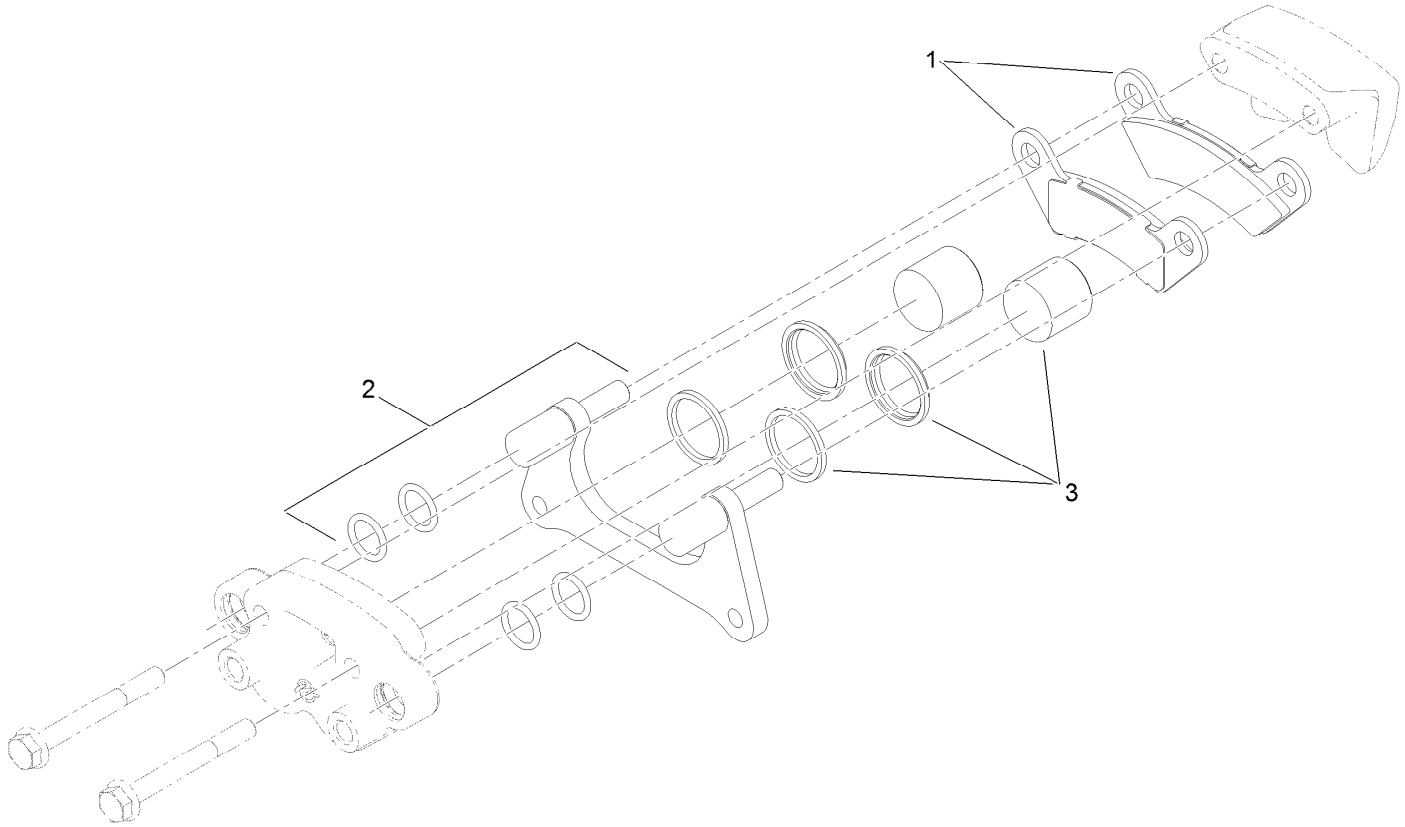


# Brake Caliper Assembly No. 127-7424

| *Ref.* | *Part Number* | *Qty.* | *Description* |
|---|---|---|---|
| 1 | 119-9510 | 1 | Pads-Brake |
| 2 | 119-9511 | 1 | Bracket Kit |
| 3 | 133-0614 | 1 | Piston Kit |

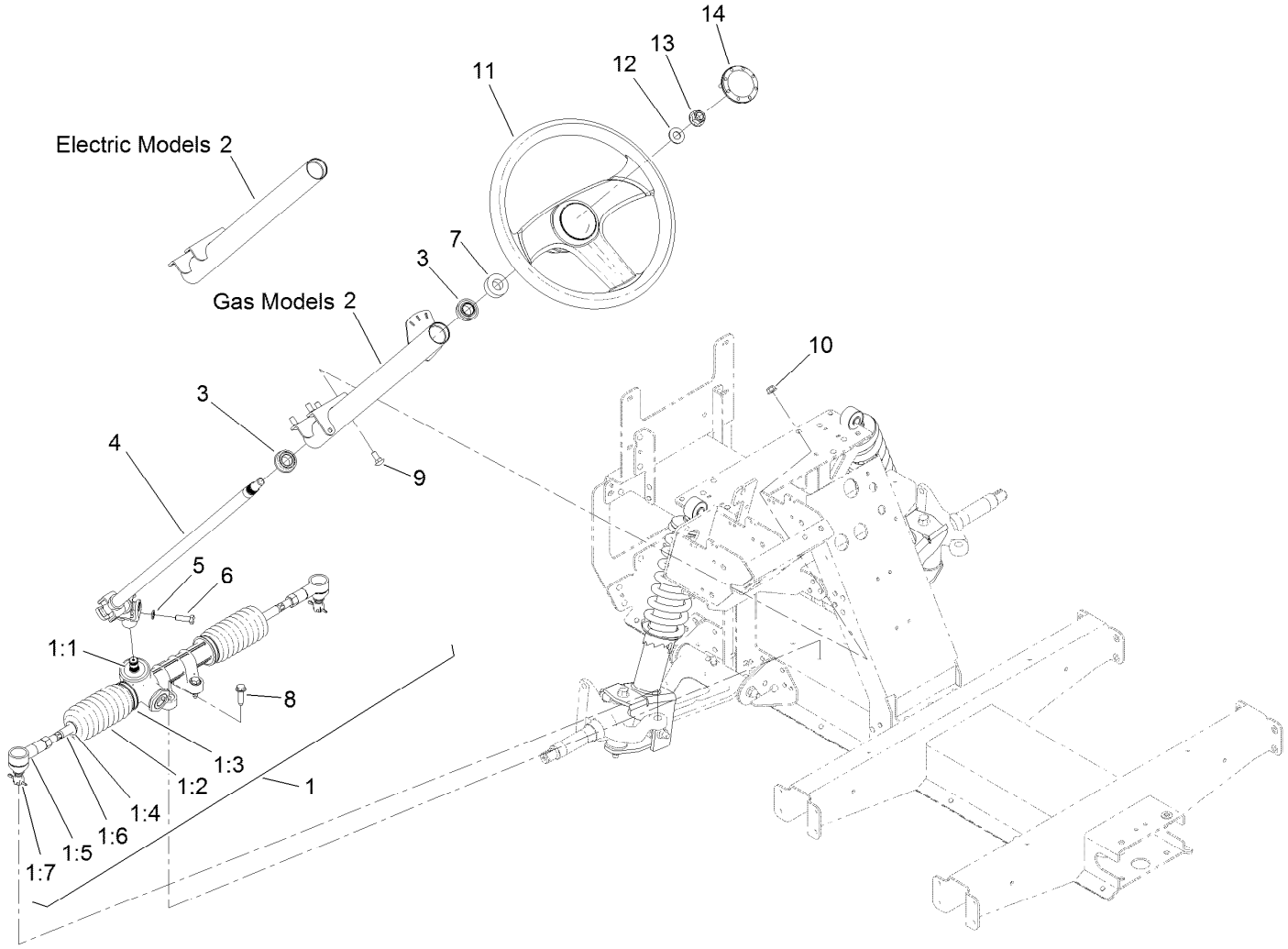


# Steering Assembly

| Ref. | Part Number | Qty. | Description |
|---|---|---|---|
| 1 | 127-8797 | 1 | Steering Rack ASM |
| 1:1 | 133-0607 | 1 | Seal-Shaft |
| 1:2 | 133-0606 | 2 | Bellows |
| 1:3 | 133-0605 | 2 | Clamp-Bellows, Inner |
| 1:4 | 133-0604 | 2 | Clamp-Bellows, Outer |
| 1:5 | 133-0602 | 2 | End-Rod, Track |
| 1:6 | 133-0601 | 2 | Rod-Tie, Track |
| 1:7 | 3272-42 | 2 | Pin-Cotter |
| 2 | 131-8513-03 | 1 | Steering Column ASM |
| 3 | 112-3262 | 2 | Bearing |
| 4 | 127-8804 | 1 | Steering Shaft ASM |

| Ref. | Part Number | Qty. | Description |
|---|---|---|---|
| 5 | 3253-4 | 1 | Washer-Lock |
| 6 | 116-3515 | 1 | Screw-HH, Special |
| 7 | 21-9260 | 1 | Cover-Dust |
| 8 | 32144-49 | 4 | Screw-HWHTF |
| 9 | 3230-1 | 4 | Bolt-CARR |
| 10 | 104-8300 | 4 | Nut-HF, NI |
| 11 | 131-0957 | 1 | Wheel-Steering |
| 12 | 3256-26 | 1 | Washer-Flat |
| 13 | 99-5107 | 1 | Nut-Lock |
| 14 | 131-3630 | 1 | Cap-Wheel, Steering |

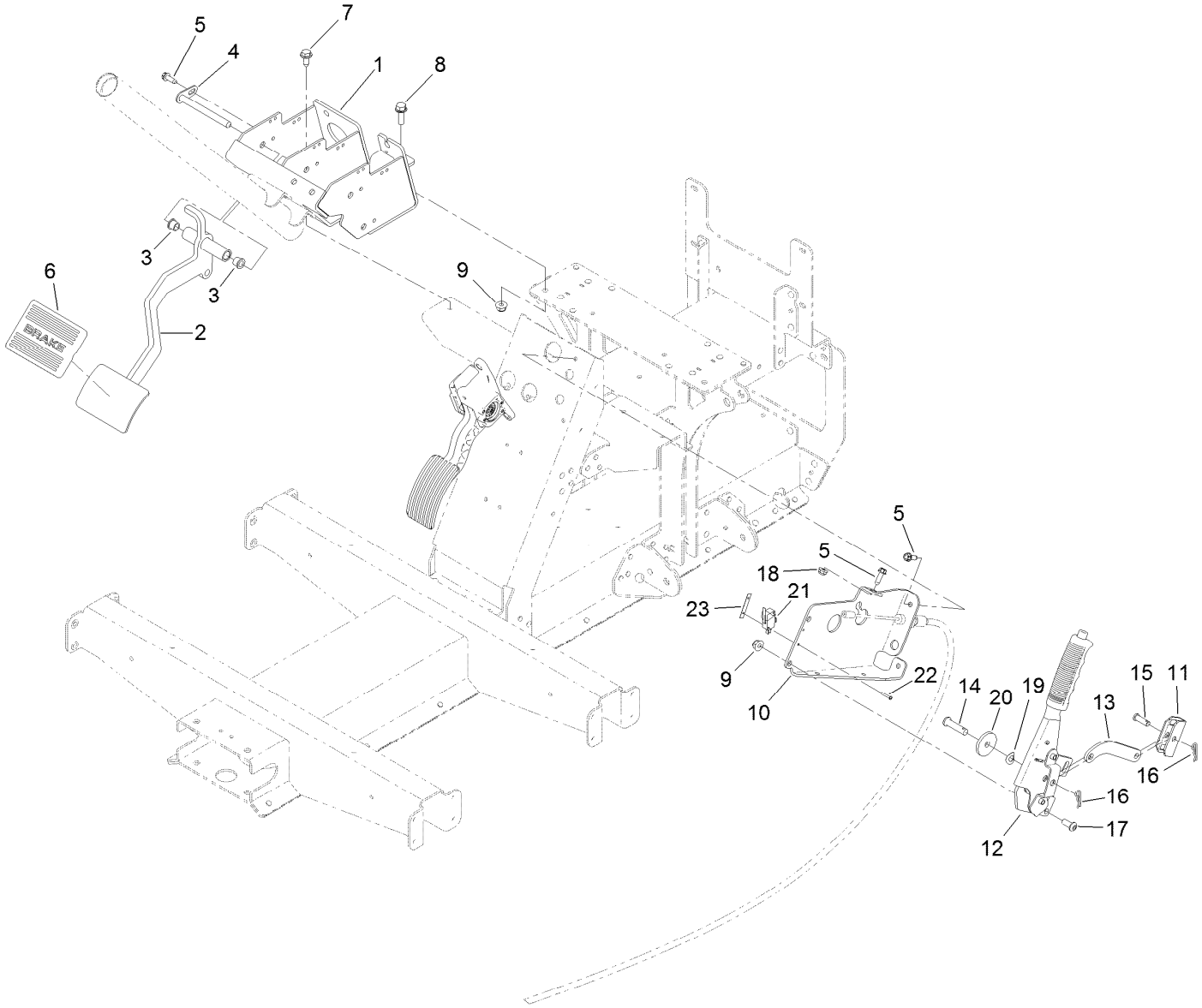


# Pedal and Control Assembly

| Ref. | Part Number | Qty. | Description |
|---|---|---|---|
| 1 | 127-8817-03 | 1 | Pedal Mount ASM |
| 2 | 127-8818-03 | 1 | Brake Pedal ASM |
| 3 | 256-116 | 2 | Bushing-Flange |
| 4 | 131-8459 | 1 | Pivot Shaft ASM |
| 5 | 49-2040 | 4 | Screw-HWHTF |
| 6 | 7-3900 | 1 | Pad-Brake |
| 7 | 32144-70 | 2 | Screw-HWHTF |
| 8 | 3234-29 | 1 | Screw-HHF |
| 9 | 104-8300 | 3 | Nut-HF, NI |
| 10 | 127-8834-03 | 1 | Mount-Brake, Park |
| 11 | 87-3480 | 1 | Bracket-Equalizer, Cable |
| 12 | 131-8320 | 1 | Lever-Brake, Park |

| Ref. | Part Number | Qty. | Description |
|---|---|---|---|
| 13 | 127-8836-03 | 1 | Link-Brake, Park |
| 14 | 283-10 | 1 | Pin-Clevis |
| 15 | 1-808280 | 1 | Pin-Clevis |
| 16 | 1-806003 | 2 | Pin-Cotter |
| 17 | 3274-55 | 2 | Screw-HSBH |
| 18 | 104-7201 | 1 | Nut-HF |
| 19 | 121-4605 | 1 | Washer-Spring |
| 20 | 131-8496 | 1 | Washer-Plain |
| 21 | 108-6496 | 1 | Switch (W/Boot) |
| 22 | 3290-313 | 2 | Screw-SPH |
| 23 | 3290-354 | 1 | Nut-Speed |

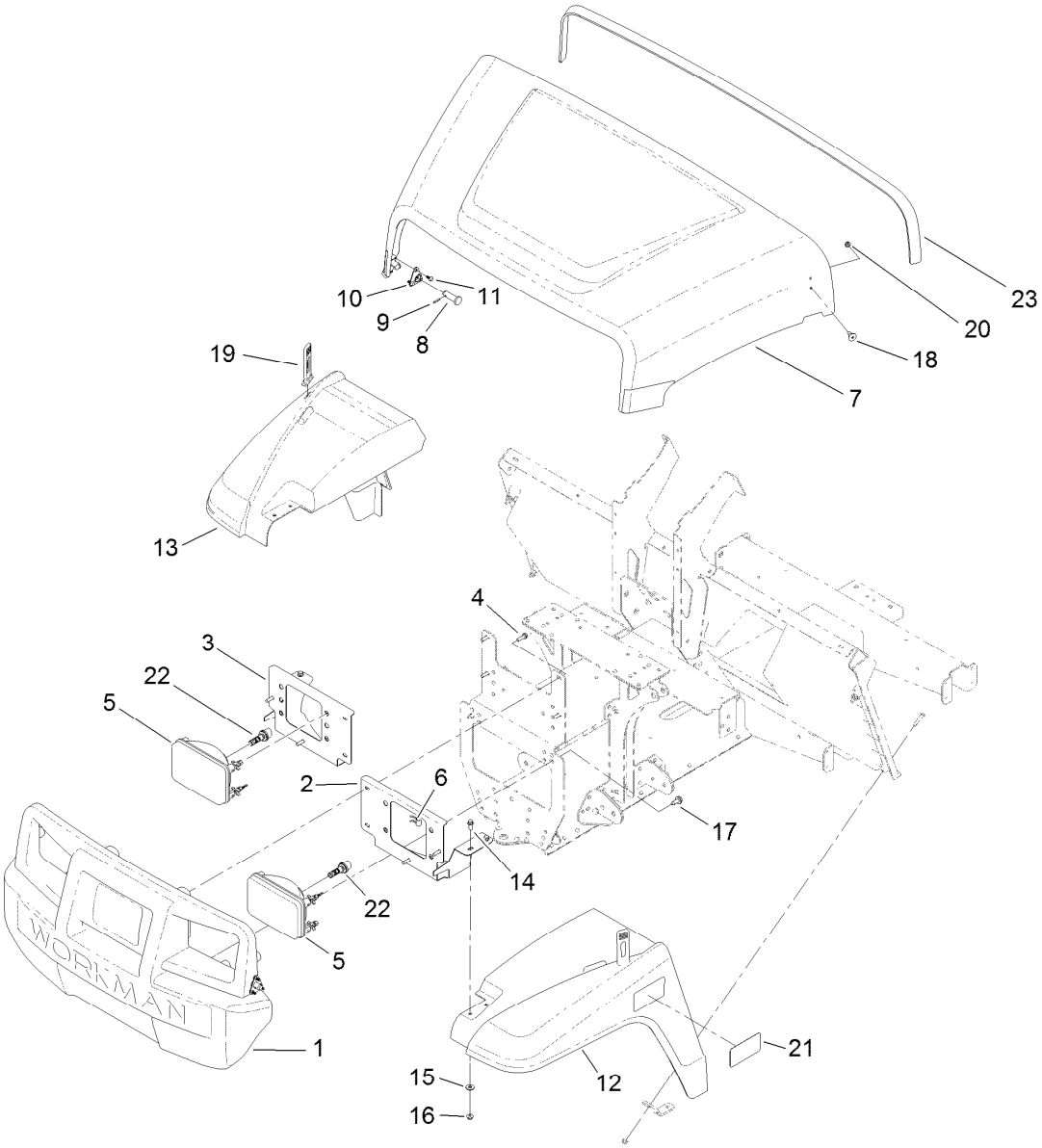


# Hood and Fender Assembly

| Ref. | Part Number | Qty. | Description |
|---|---|---|---|
| 1 | 132-8530 | 1 | Bumper |
| 2 | 131-8455-03 | 1 | Bracket-Headlight, LH |
| 3 | 131-8456-03 | 1 | Bracket-Headlight, RH |
| 4 | 46-8091 | 8 | Screw-HWH |
| 5 | 132-6703 | 2 | Headlight ASM |
| 6 | 115-2408 | 6 | Clip-Speed |
| 7 | 136-6281 | 1 | Hood |
| 8 | 117-5094 | 2 | Pin-Clevis |
| 9 | 32121-50 | 2 | Pin-Spring |
| 10 | 112-3308 | 2 | Retainer-Pin |
| 11 | 121-9605 | 6 | Screw-HWH |
| 12 | 127-7771 | 1 | Fender-Front, LH |

| Ref. | Part Number | Qty. | Description |
|---|---|---|---|
| 13 | 127-7772 | 1 | Fender-Front, RH |
| 14 | 3234-33 | 4 | Screw-HHF |
| 15 | 3256-2 | 4 | Washer-Flat |
| 16 | 104-7201 | 4 | Nut-HF |
| 17 | 32144-70 | 2 | Screw-HWHTF |
| 18 | 125-1122 | 2 | Screw |
| 19 | 131-8402 | 2 | Strap-Hold Down |
| 20 | 3296-56 | 2 | Nut-Lock, NI |
| 21 | 131-8516 | 2 | Decal-Fender |
| 22 | 133-0574 | 2 | Bulb-LED |
| 23 | 133-7210 | 1 | Seal-Trim, Hood |

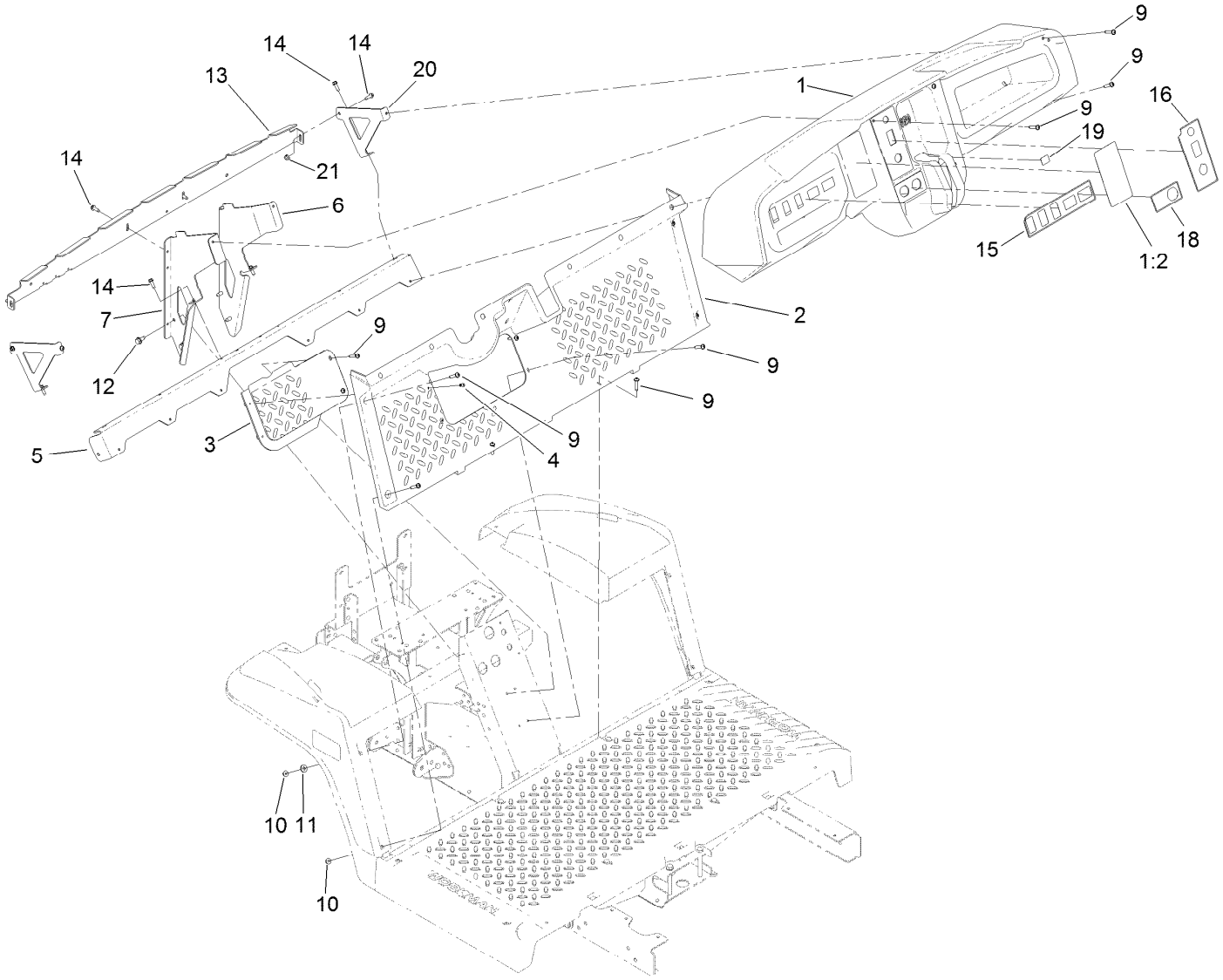


# Dash Assembly

| Ref. | Part Number | Qty. | Description |
|---|---|---|---|
| 1 | 131-8593 | 1 | Dash |
| 1:2 | 131-8414 | 1 | Decal-Danger |
| 2 | 127-7846 | 1 | Footboard |
| 3 | 127-7847 | 1 | Cover-Footboard |
| 4 | 107-7461 | 2 | Screw-Plastite |
| 5 | 127-7831-03 | 1 | Angle |
| 6 | 131-8336-03 | 1 | Bracket-Dash, RH |
| 7 | 131-8335-03 | 1 | Bracket-Dash, LH |
| 9 | 132-6777 | 20 | Screw-TTH |
| 10 | 104-7201 | 4 | Nut-HF |
| 11 | 3256-2 | 2 | Washer-Flat |

| Ref. | Part Number | Qty. | Description |
|---|---|---|---|
| 12 | 32144-70 | 4 | Screw-HWHTF |
| 13 | 131-8568-03 | 1 | Reinforcement-Dash |
| 14 | 49-2040 | 8 | Screw-HWHTF |
| 15 | 131-8411 | 1 | Decal-Dashboard, Electric |
| 16 | 131-8412 | 1 | Decal-Control Panel, Electric |
| 18 | 131-8493 | 1 | Decal-USB |
| 19 | 131-8506 | 1 | Decal-Status, Machine |
| 20 | 131-8569-03 | 2 | Bracket-Dash, Side |
| 21 | 104-7201 | 2 | Nut-HF |

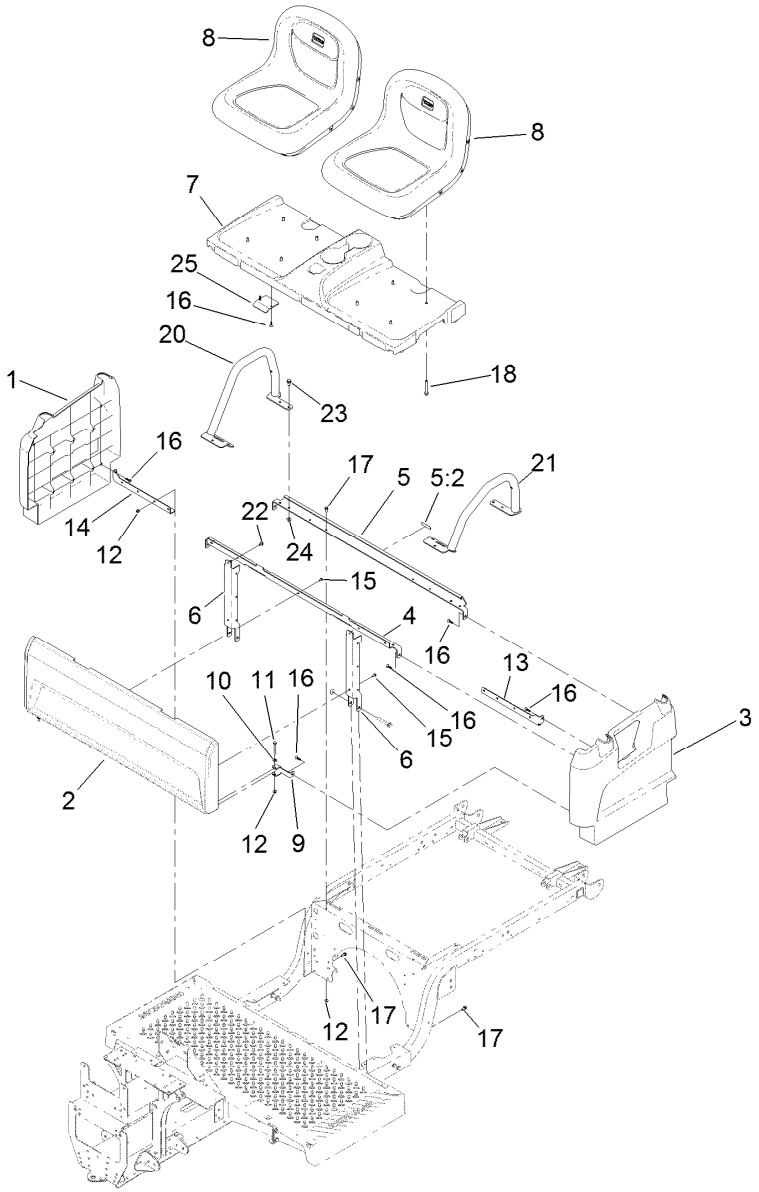


# Seatbase Assembly

| Ref. | Part Number | Qty. | Description |
|---|---|---|---|
| 1 | 127-7805 | 1 | Side-Base, Seat (RH) |
| 2 | 133-7188 | 1 | Panel-Seat Base |
| 3 | 127-7807 | 1 | Side-Base, Seat (LH) |
| 4 | 133-7345-03 | 1 | Support-Seat |
| 5 | 131-8596 | 1 | Angle-Seat Support, Rear |
| 5:2 | 120-9570 | 1 | Decal-Warning |
| 6 | 127-7841-03 | 2 | Channel-Support, Seat |
| 7 | 127-7839 | 1 | Base-Mount, Seat |
| 8 | 133-0577 | 2 | Seat ASM |
| 9 | 127-7844-03 | 2 | Clamp-Plate, Floor |
| 10 | 3256-22 | 2 | Washer-Flat |
| 11 | 321-18 | 2 | Screw-HH |
| 12 | 104-7201 | 8 | Nut-HF |

| Ref. | Part Number | Qty. | Description |
|---|---|---|---|
| 13 | 127-7842-03 | 1 | Bracket-Support, Side (LH) |
| 14 | 127-7843-03 | 1 | Bracket-Support, Side (RH) |
| 15 | 112-6349 | 5 | Screw-HWH |
| 16 | 120-2349 | 12 | Screw |
| 17 | 3234-33 | 6 | Screw-HHF |
| 18 | 33104-060 | 8 | Screw-HHF |
| 20 | 131-8352-05 | 1 | Restraint-Hip, RH |
| 21 | 131-8353-05 | 1 | Restraint-Hip, LH |
| 22 | 46-6810 | 2 | Screw And Washer ASM |
| 23 | 32144-70 | 6 | Screw-HWHTF |
| 24 | 104-8300 | 6 | Nut-HF, NI |
| 25 | 133-7167-03 | 2 | Bracket-Hinge, Seat |

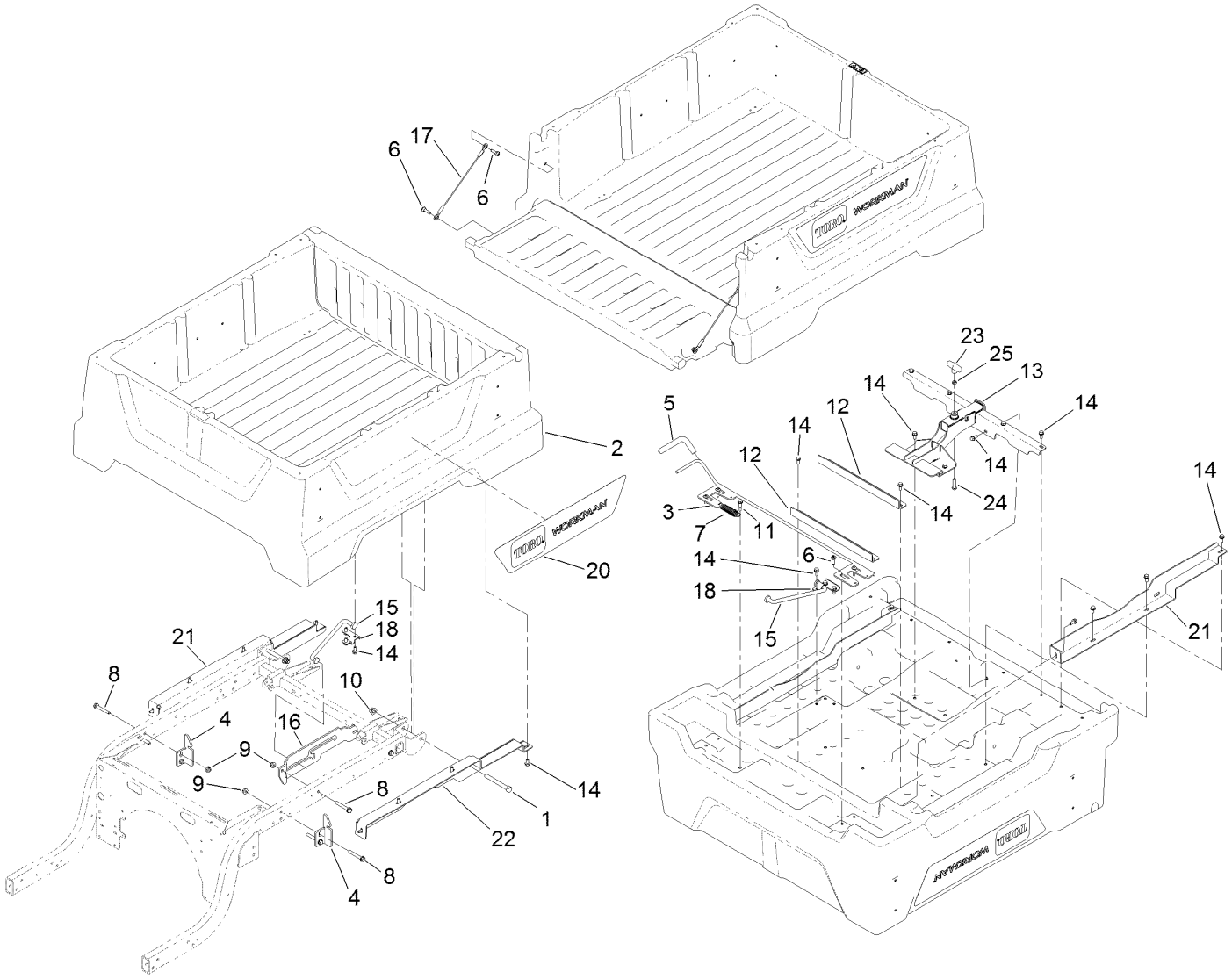


# Cargo Bed Assembly

| Ref. | Part Number | Qty. | Description |
|---|---|---|---|
| 1 | 325-18 | 2 | Screw-HH |
| 2 | 131-8592 | 1 | Cargo Bed And Tailgate ASM |
| 3 | 132-8524 | 1 | Latch ASM |
| 4 | 127-7428-03 | 2 | Striker-Latch, Bed |
| 5 | 132-8515 | 1 | Grip-Handle |
| 6 | 119-2267 | 8 | Screw-Shoulder, BHTF |
| 7 | 106-5598 | 1 | Spring-Extension |
| 8 | 3234-39 | 6 | Screw-HHF |
| 9 | 104-8301 | 6 | Nut-HF, NI |
| 10 | 99-5107 | 2 | Nut-Lock |
| 11 | 116-8607 | 1 | Screw-Shoulder |
| 12 | 132-8526-03 | 2 | Brace-Middle, Bed |

| Ref. | Part Number | Qty. | Description |
|---|---|---|---|
| 13 | 132-8523-03 | 1 | Attachment-Quick, Class 1 |
| 14 | 3234-5 | 25 | Screw-HHF |
| 15 | 132-8517 | 1 | Rod-Prop |
| 16 | 132-8518 | 1 | Bracket-Rod, Prop |
| 17 | 121-6343 | 2 | Lanyard-Tailgate |
| 18 | 132-0839 | 1 | Bracket-U, Prop Rod |
| 20 | 132-8538 | 2 | Decal-Workman |
| 21 | 133-3042-03 | 1 | Support-Cargo Bed, RH |
| 22 | 133-3043-03 | 1 | Support-Cargo Bed, LH |
| 23 | 133-3056 | 1 | Handle-T |
| 24 | 95-3857 | 1 | Screw-HSBH |
| 25 | 3218-3 | 1 | Nut-Jam |

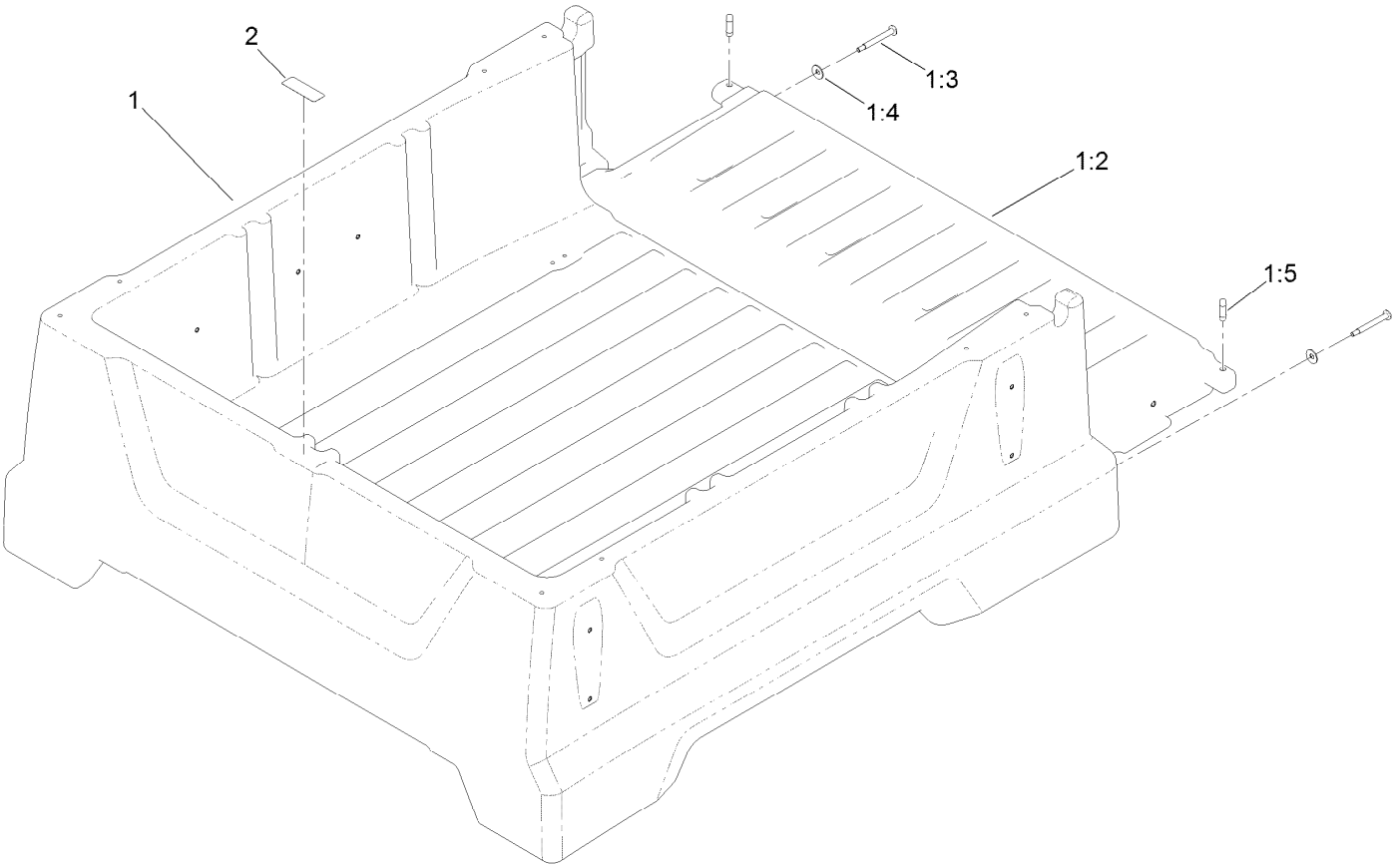


# Cargo Bed and Tailgate Assembly No. 131-8592

| *Ref.* | *Part Number* | *Qty.* | *Description* |
|---|---|---|---|
| 1 | | 1 | Cargo Bed And Tailgate ASM ● |
| 1:2 | 132-0841 | 1 | Tailgate |
| 1:3 | 133-7100 | 2 | Screw-Shoulder, Bh (Torx) |
| 1:4 | 3290-456 | 2 | Washer-Belleville |
| 1:5 | 133-7146 | 2 | Plug-Tailgate, Anti-Rattle |
| 2 | 115-7739 | 1 | Decal-No Riders |

● Not serviced separately

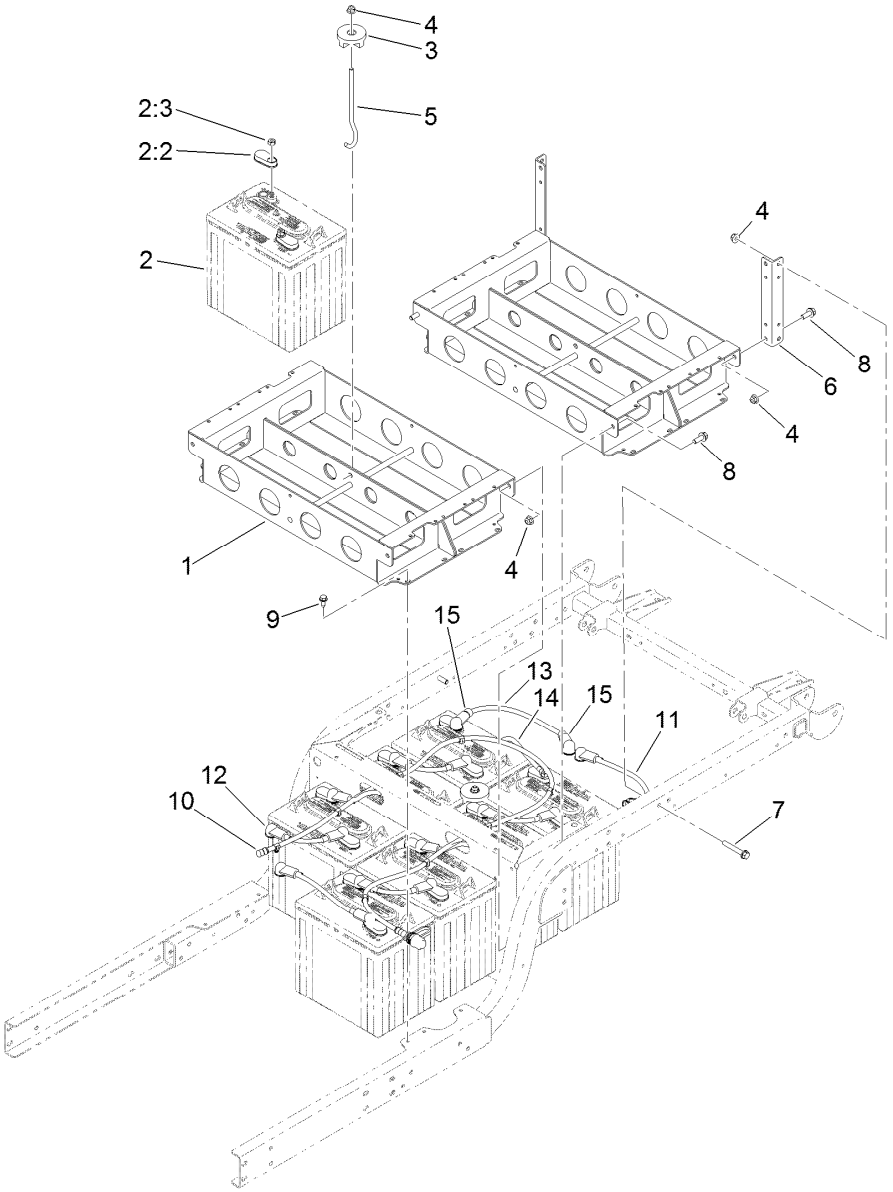


# Battery Assembly

| Ref. | Part Number | Qty. | Description |
|---|---|---|---|
| 1 | 131-8300-03 | 2 | Battery Tray ASM |
| 2 | | 8 | Battery-Lead Acid, Wet ■ |
| 2:2 | 107-0289 | 2 | Cover-Terminal, Battery |
| 2:3 | 107-0388 | 2 | Nut |
| 3 | 104-7149 | 2 | Hold Down ASM |
| 4 | 104-8301 | 8 | Nut-HF, NI |
| 5 | 131-8387 | 2 | Rod-Battery Hold Down |
| 6 | 131-8302-03 | 2 | Bracket-Box, Battery |
| 7 | 3234-39 | 2 | Screw-HHF |
| 8 | 3234-42 | 4 | Screw-HHF |

| Ref. | Part Number | Qty. | Description |
|---|---|---|---|
| 9 | 32144-70 | 4 | Screw-HWHTF |
| 10 | 131-8491 | 1 | Watering Hose ASM |
| 11 | 107-0739 | 2 | Cable-Battery, Positive |
| 12 | 107-0738 | 6 | Cable-Battery, Positive |
| 13 | 122-0750 | 1 | Cable-Battery, Positive |
| 14 | 94-6168 | 1 | Wire-Ground, Battery |
| 15 | 32180-009 | 2 | Insulator-Lug, Red |
| 99 | 107-0392 | 1 | Protection-Terminal, Aerosol ● |

● Not illustrated

■ Not serviced separately

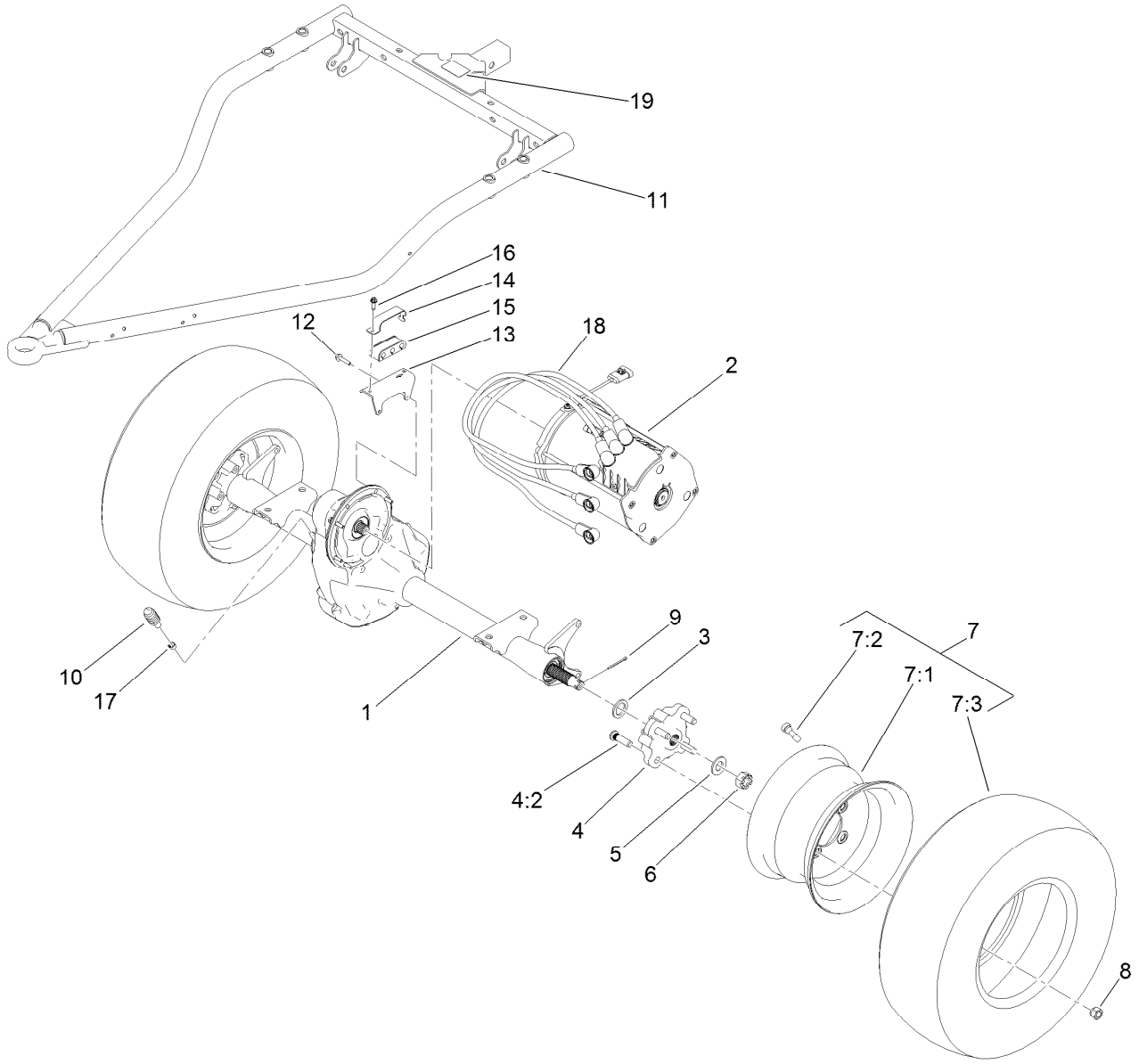


# Rear Axle and Motor Assembly

| Ref. | Part Number | Qty. | Description |
|---|---|---|---|
| 1 | 136-6340 | 1 | Transaxle ASM |
| 2 | 131-8485 | 1 | Motor-Electric |
| 3 | 131-8570 | 2 | Spacer-Hardened |
| 4 | 127-8848 | 2 | Rear Hub ASM |
| 4:2 | 10-6830 | 4 | Stud-Type, Drive |
| 5 | 92-5836 | 2 | Washer |
| 6 | 32136-5 | 2 | Nut-Hex, Slotted |
| 7 | 131-8319 | 2 | Tire/Wheel ASM |
| 7:1 | 131-8317 | 1 | Wheel |
| 7:2 | 232-27 | 1 | Stem-Valve |
| 7:3 | 131-8318 | 1 | Tire |
| 8 | 242-50 | 8 | Nut-Lug |
| 9 | 1-806800 | 2 | Pin-Cotter |

| Ref. | Part Number | Qty. | Description |
|---|---|---|---|
| 10 | 127-8859 | 1 | Bellows-Breather |
| 11 | 131-8340-03 | 1 | Swing Arm ASM |
| 12 | 33103-030 | 6 | Screw-HHF |
| 13 | 131-8416 | 1 | Bracket-Cable |
| 14 | 131-8482 | 1 | Retainer-Isolator |
| 15 | 131-8420 | 1 | Isolator-Clamp |
| 16 | 49-2040 | 1 | Screw-HWHTF |
| 17 | 2412-146 | 1 | Clamp-Hose |
| 18 | 122-0743 | 3 | Cable-Battery, Positive |
| 19 | 131-8598 | 1 | Decal-Rating, Hitch |
| 99 | 107-0392 | 1 | Protection-Terminal, Aerosol ● |

● Not illustrated

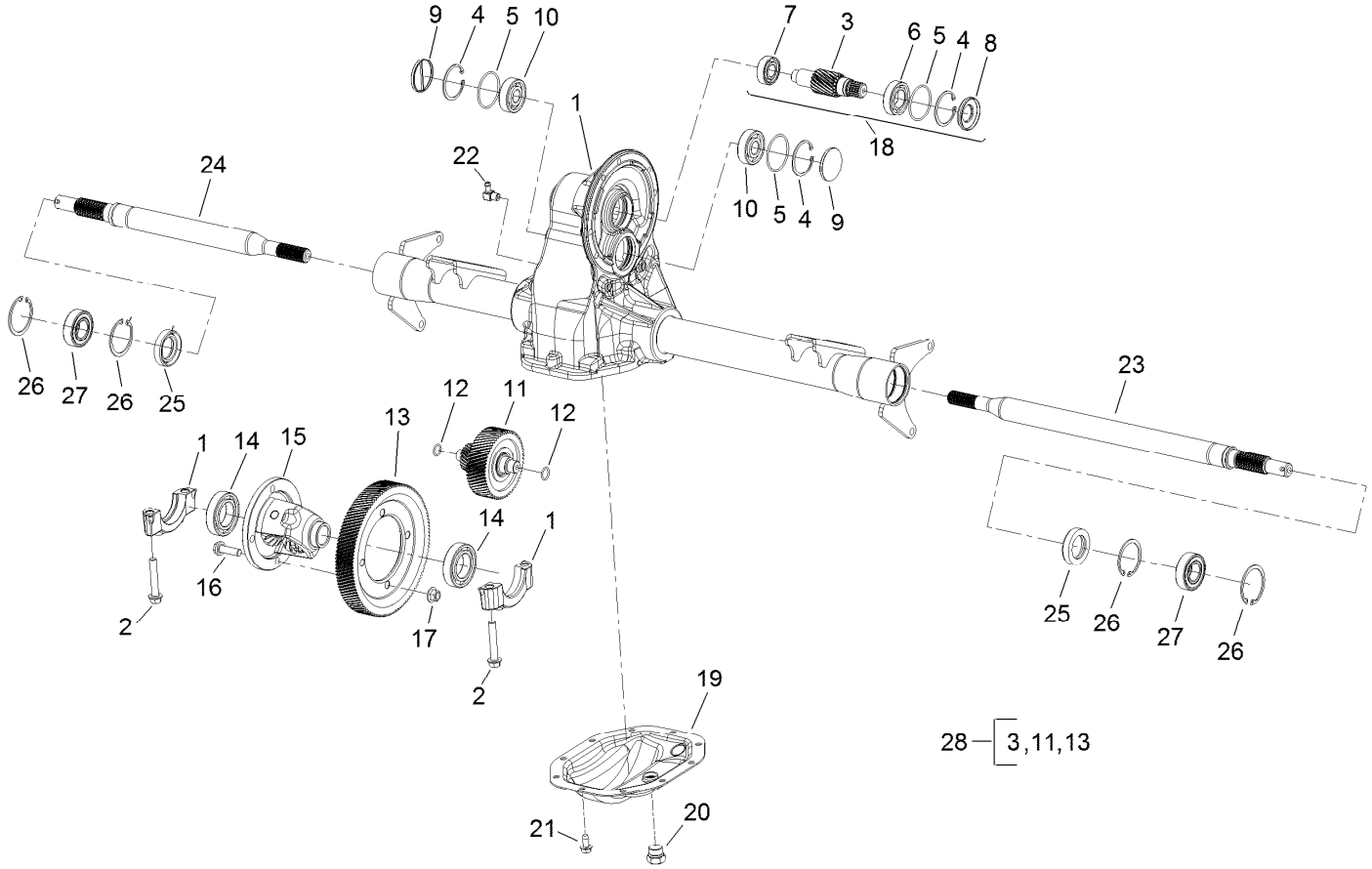


# Transaxle Assembly No. 136-6340

| Ref. | Part Number | Qty. | Description |
|---|---|---|---|
| 1 | 133-2447 | 1 | Housing-Axle |
| 2 | 133-2448 | 4 | Bolt-Cap, Bearing |
| 3 | 133-2485 | 1 | Gear-Input |
| 4 | 133-2450 | 3 | Ring-Retaining |
| 5 | 133-2451 | 3 | O-Ring |
| 6 | 133-2452 | 1 | Bearing-Ball |
| 7 | 133-2453 | 1 | Bearing-Ball |
| 8 | 133-2454 | 1 | Seal-Oil |
| 9 | 133-2455 | 2 | Plug-Cap, End |
| 10 | 133-2456 | 2 | Bearing-Ball |
| 11 | 133-2486 | 1 | Intermediate Gear ASM |
| 12 | 133-2458 | 2 | O-Ring |
| 13 | 133-2459 | 1 | Gear-Drive, Final |
| 14 | 133-2460 | 2 | Bearing-Ball |

| Ref. | Part Number | Qty. | Description |
|---|---|---|---|
| 15 | 133-2461 | 1 | Differential ASM |
| 16 | 133-2462 | 4 | Bolt-HHF |
| 17 | 133-2463 | 4 | Nut-Lock |
| 18 | 133-2487 | 1 | Input Gear Kit |
| 19 | 136-6341 | 1 | Plate-Cover |
| 20 | 133-2466 | 1 | Plug-HH |
| 21 | 133-2467 | 10 | Screw-Tapping |
| 22 | 133-2468 | 1 | Elbow-Hose |
| 23 | 133-2469 | 1 | Shaft-Axle, LH |
| 24 | 133-2470 | 1 | Shaft-Axle, RH |
| 25 | 133-2471 | 2 | Seal-Oil |
| 26 | 133-2472 | 4 | Ring-Retaining |
| 27 | 108-2425 | 2 | Bearing-Ball |
| 28 | 108-2409 | 1 | Internal Gear Kit |

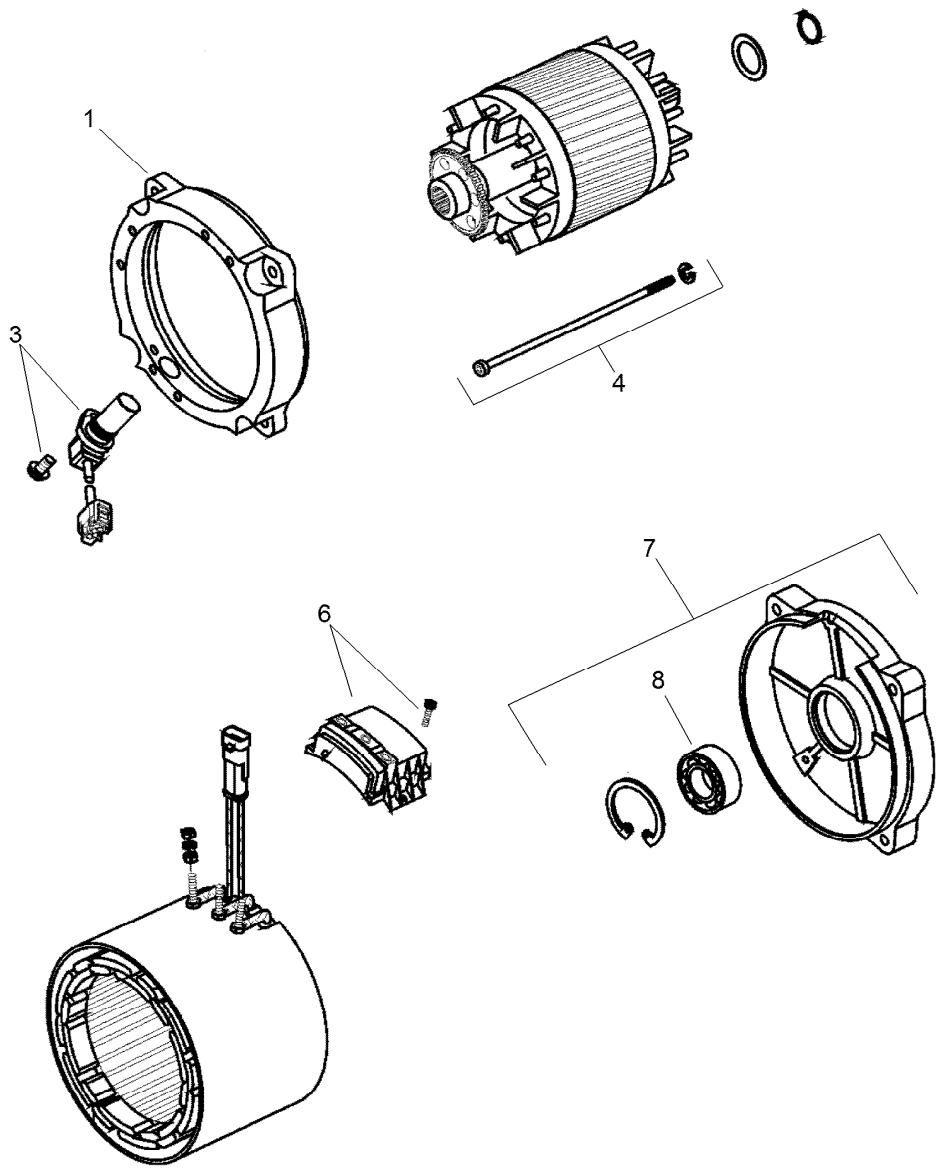


# Electric Motor Assembly No. 131-8485

| *Ref.* | *Part Number* | *Qty.* | *Description* |
|---|---|---|---|
| 1 | 132-4924 | 1 | Bracket-End, Drive |
| 3 | 132-4925 | 1 | Sensor |
| 4 | 132-4926 | 1 | Screw |
| 6 | 132-4927 | 1 | Plate-Connection |
| 7 | 132-4928 | 1 | Bracket-End, Rear |
| 8 | 132-4929 | 1 | Bearing |

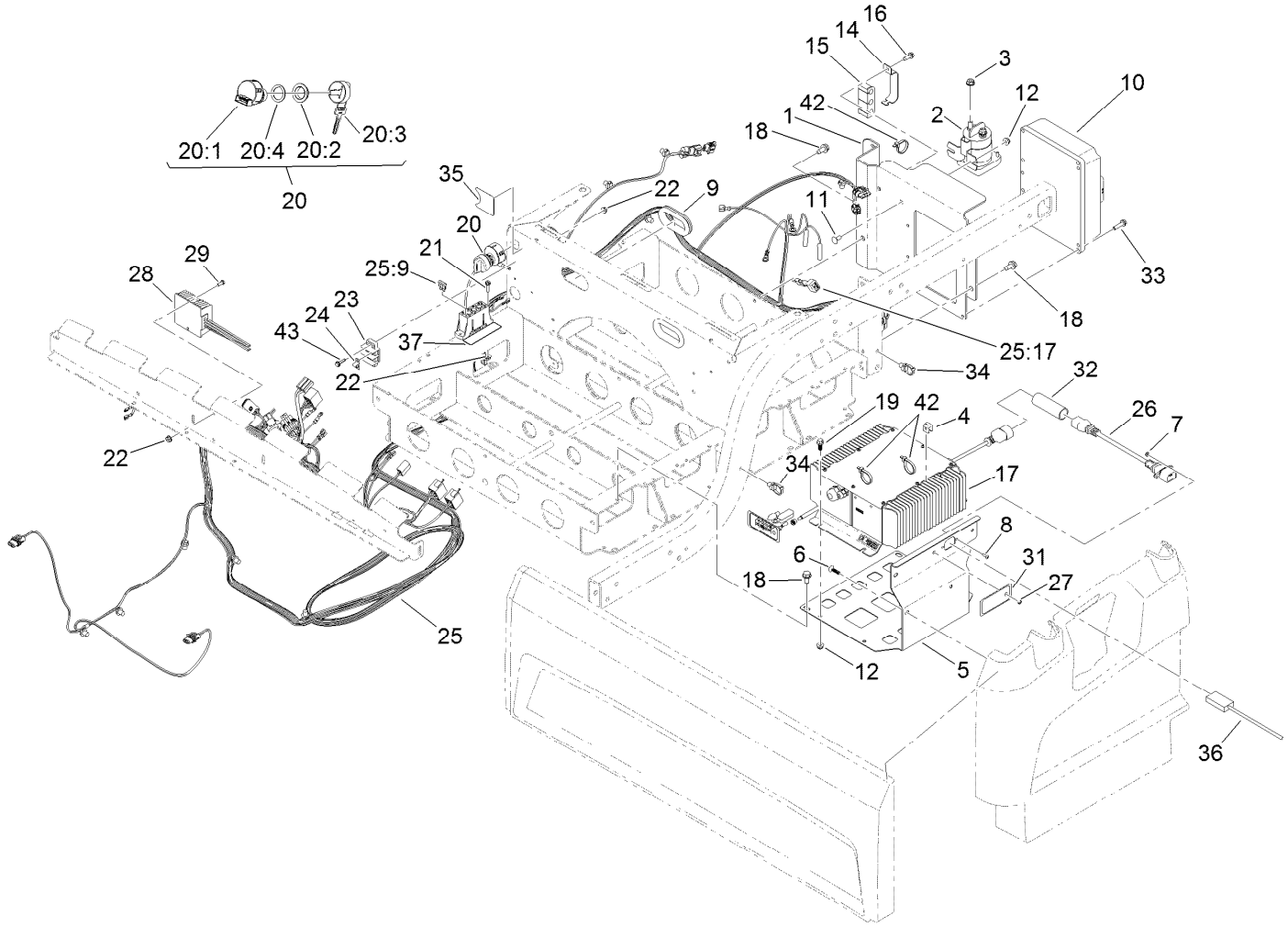


# Controller Assembly

| Ref. | Part Number | Qty. | Description |
|---|---|---|---|
| 1 | 131-8415-03 | 1 | Bracket-Controller |
| 2 | 104-7136 | 1 | Contactor-48V |
| 3 | 107-0380 | 2 | Nut-HHF |
| 4 | 32180-082 | 1 | Clip-Edge W/Tie, Perpendicular |
| 5 | 131-8483-03 | 1 | Bracket-Charger |
| 6 | 120-2349 | 4 | Screw |
| 7 | 3296-9 | 2 | Nut-Hex |
| 8 | 3249-3 | 2 | Screw-PRH |
| 9 | 240-12 | 2 | Grommet |
| 10 | 127-2767 | 1 | Controller-Sevcon |
| 11 | 3229-11 | 2 | Screw-CARR |
| 12 | 104-7201 | 6 | Nut-HF |
| 14 | 131-8482 | 1 | Retainer-Isolator |
| 15 | 131-8420 | 1 | Isolator-Clamp |
| 16 | 49-2040 | 1 | Screw-HWHTF |
| 17 | 131-8490 | 1 | Charger-48V Onboard |
| 18 | 32144-70 | 5 | Screw-HWHTF |

| Ref. | Part Number | Qty. | Description |
|---|---|---|---|
| 19 | 99-6810 | 4 | Screw-HHF |
| 20 | 110-2580 | 1 | Switch-Key, Supervisor |
| 20:1 | | 1 | Switch-Key ● |
| 20:2 | 108-8660 | 1 | Nut-Mounting |
| 20:3 | 110-5221 | 1 | Set-Key, Supervisor |
| 20:4 | 108-8659 | 1 | Washer-Backup |
| 21 | 32105-13 | 2 | Screw-HWH |
| 22 | 3290-148 | 4 | Nut-HF |
| 23 | 42862 | 1 | Block-Terminal, Ground |
| 24 | 42863 | 1 | Strip-Jumper |
| 25 | 122-0524 | 1 | Harness-Wire, 48V Vehicle |
| 25:9 | 117-4724 | 1 | Fuse-Blade, 10A |
| 25:17 | 100-4918 | 2 | Diode |
| 26 | 131-8497 | 1 | Cordset |
| 27 | 131-8499 | 1 | Holder-LED |
| 28 | 131-8509 | 1 | Converter-48V To 12V |
| 29 | 32105-8 | 2 | Screw-SHH |
| 31 | 131-8495 | 1 | Decal-Function, Charger |

● Not serviced separately

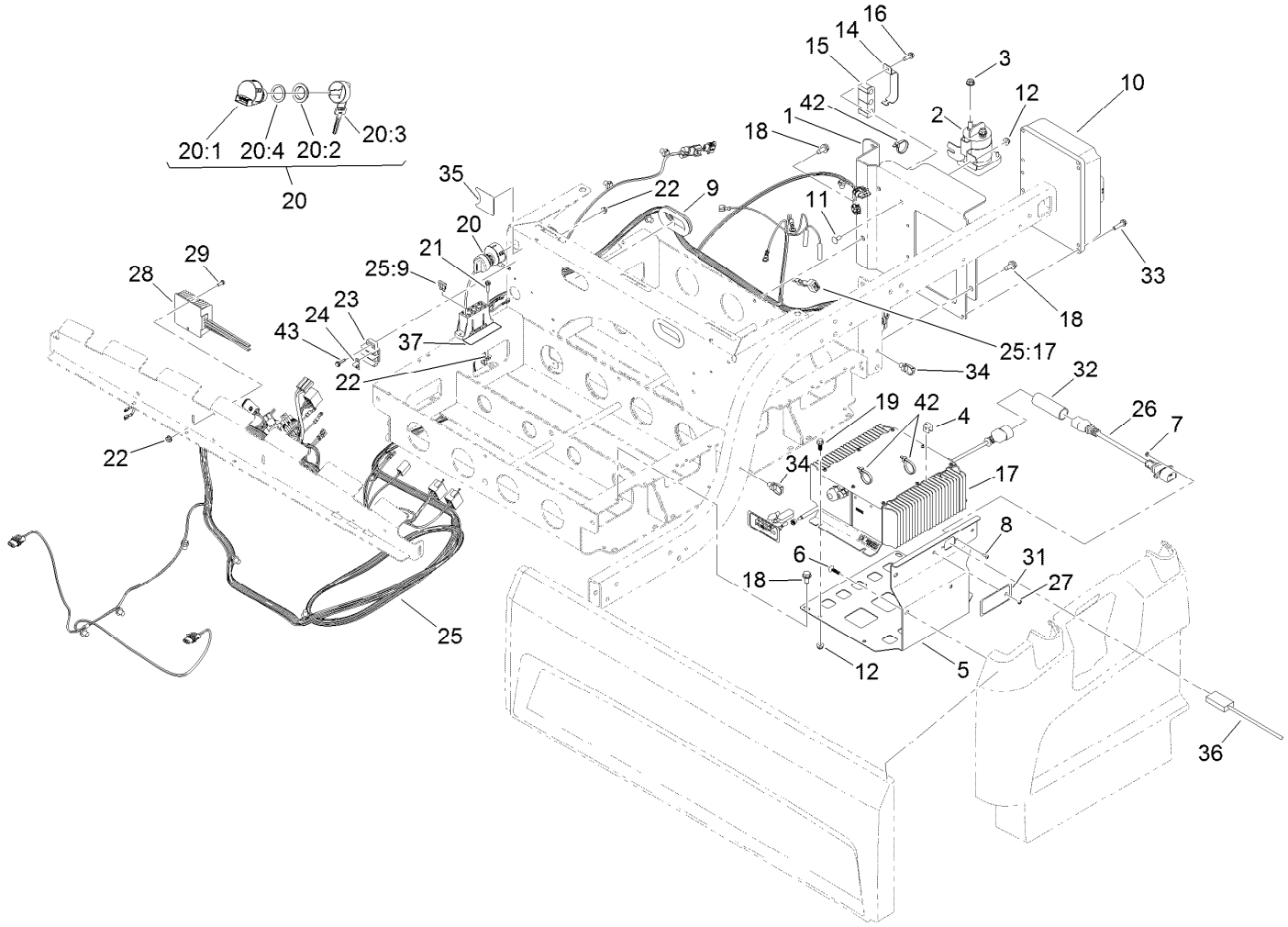


# Controller Assembly (continued)

| Ref. | Part Number | Qty. | Description |
|---|---|---|---|
| 32 | 107-0341 | 1 | Tube-Shrink, Heat |
| 33 | 32144-86 | 4 | Screw-HWHTF |
| 34 | 32180-030 | 3 | Clip-Tie |
| 35 | 131-8527 | 1 | Decal-Mode |
| 36 | 107-0382 | 1 | Powercord-AC, Europe |

| Ref. | Part Number | Qty. | Description |
|---|---|---|---|
| 36 | 107-0383 | 1 | Powercord-AC, U.K. |
| 36 | 107-0384 | 1 | Powercord-AC |
| 37 | 131-8551 | 1 | Decal-Fuse Block, 48V |
| 42 | 3290-378 | 3 | Tie-Cable |
| 43 | 100-4351 | 2 | Screw-HWH |

● Not serviced separately

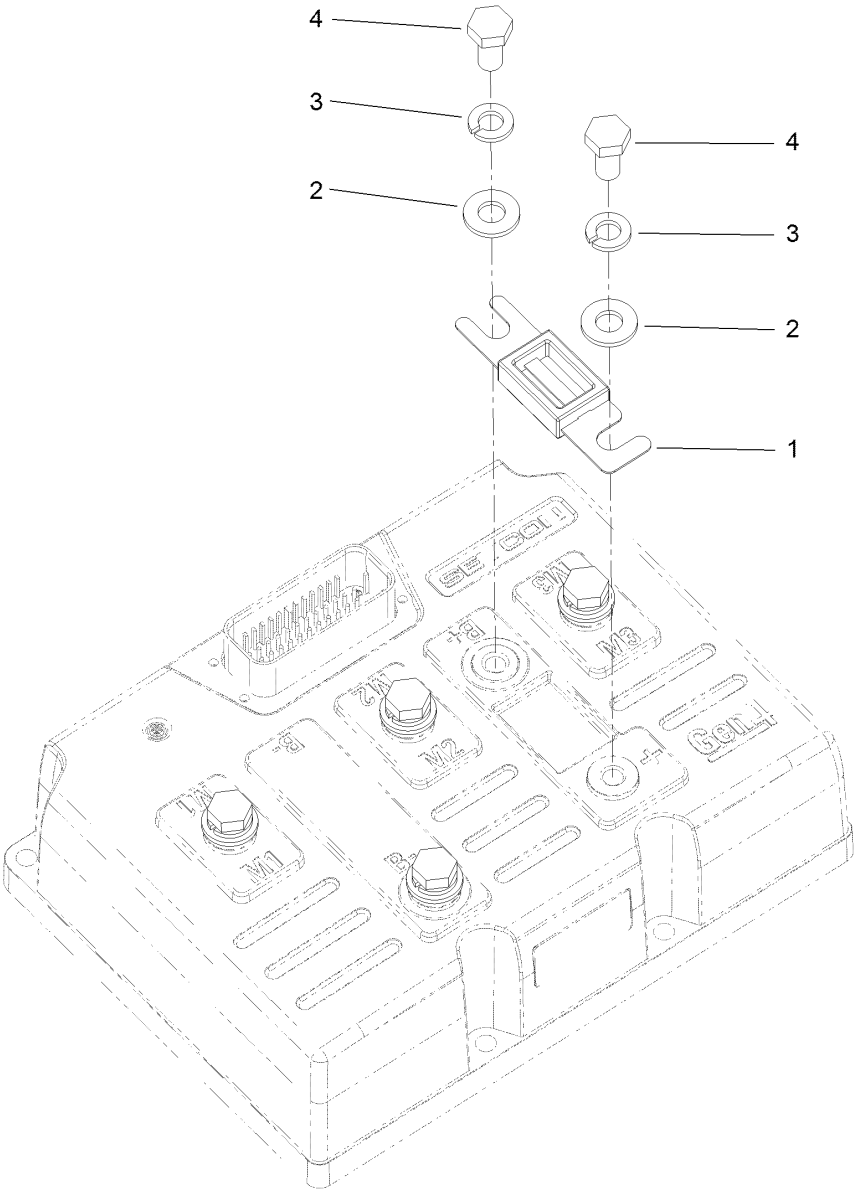


# Sevcon Controller Assembly No. 127-2767

| *Ref.* | *Part Number* | *Qty.* | *Description* |
|---|---|---|---|
| 1 | 131-8494 | 1 | Fuse-425 Amp |
| 2 | 33094-00 | 6 | Washer-Plain |
| 3 | 3253-4 | 6 | Washer-Lock |
| 4 | 33114-016 | 6 | Screw-HH |

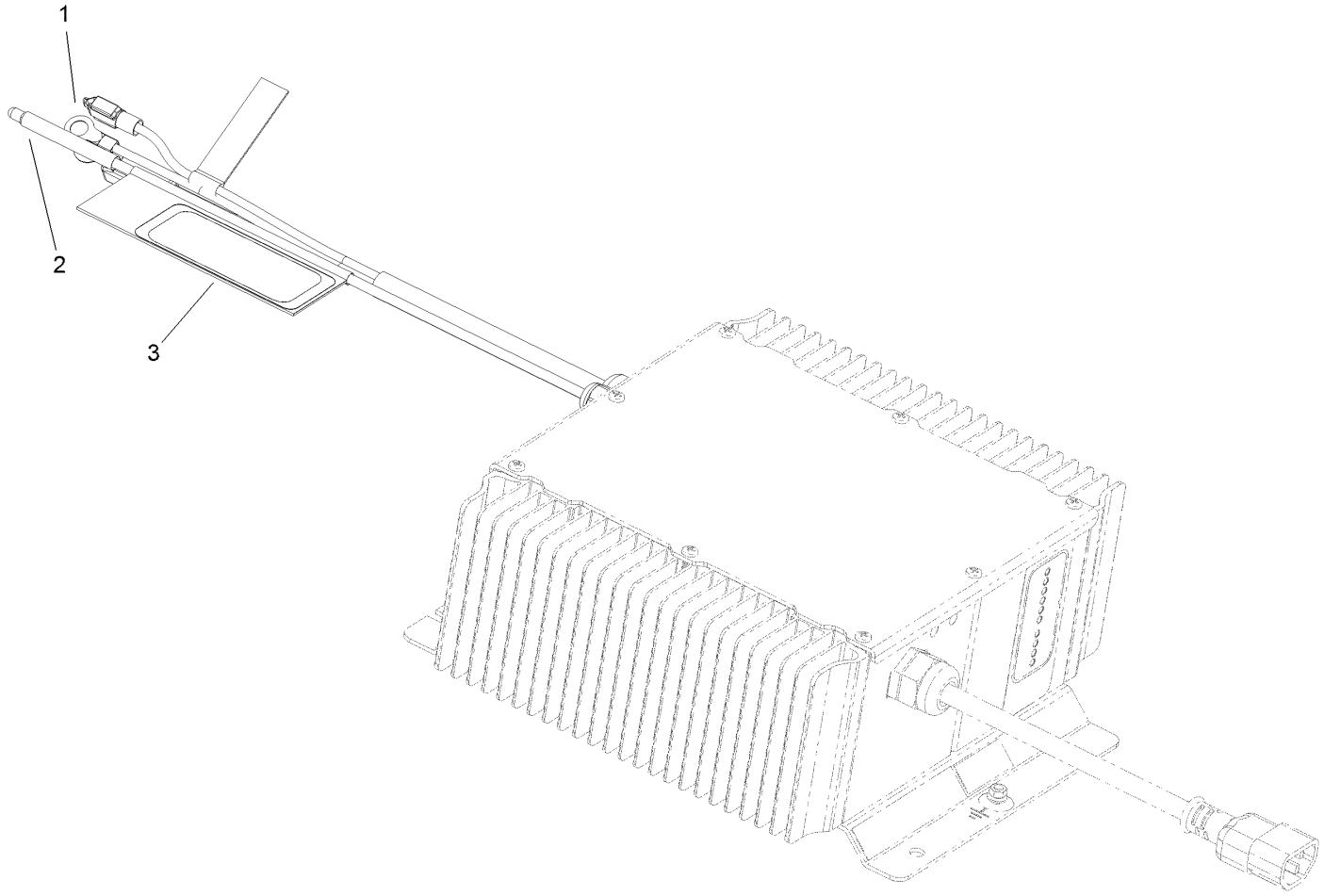


# Onboard Charger Assembly No. 131-8490

| *Ref.* | *Part Number* | *Qty.* | *Description* |
|---|---|---|---|
| 1 | 131-8511 | 1 | Thermister Repair Kit |
| 2 | 131-8512 | 1 | Remote LED |
| 3 | 131-8495 | 1 | Decal-Function, Charger |

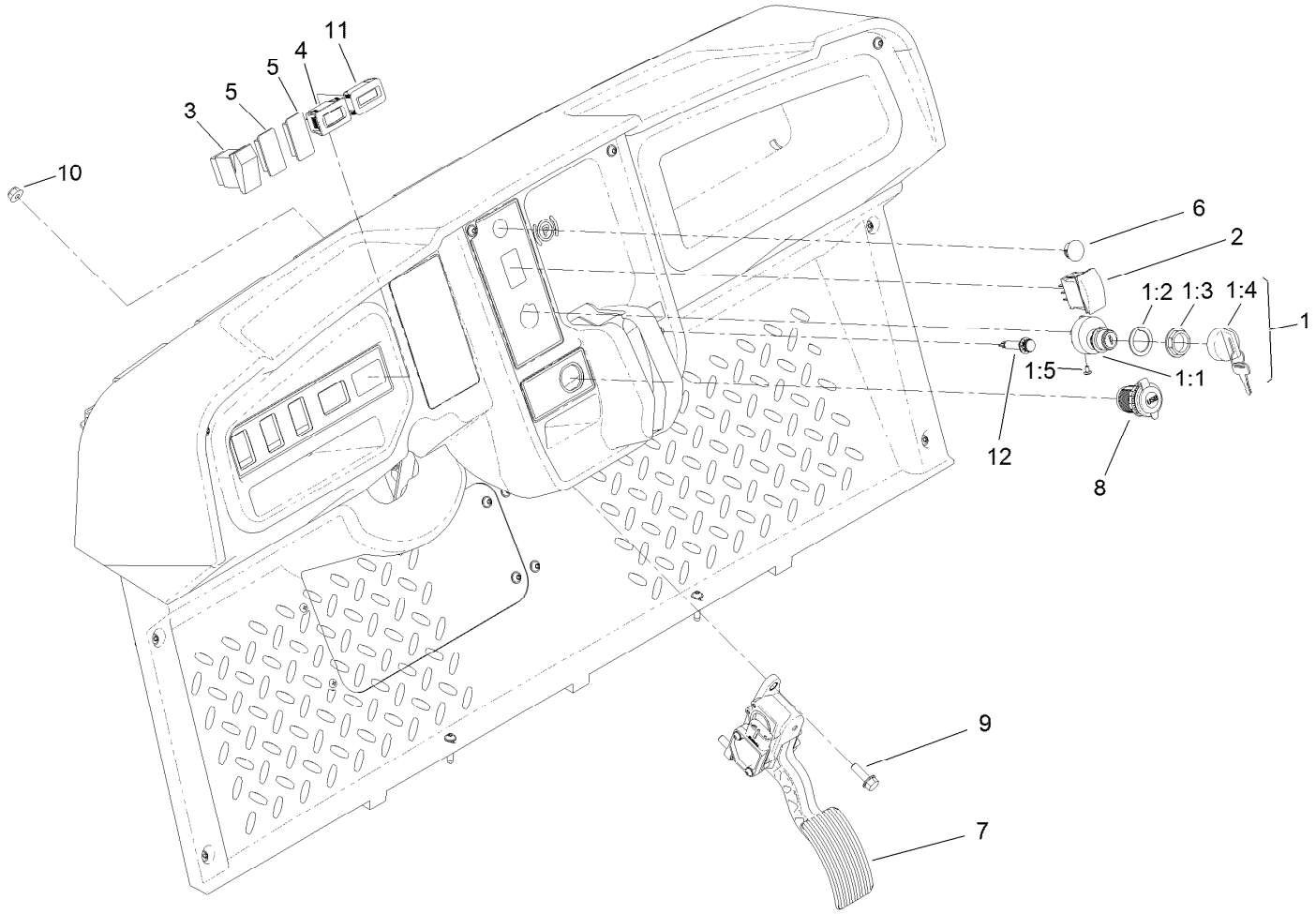


# Accelerator Pedal and Key Switch Assembly

| Ref. | Part Number | Qty. | Description |
|---|---|---|---|
| 1 | 120-4815 | 1 | Switch-Key, 48V |
| 1:1 | | 1 | Switch-Key ● |
| 1:2 | 108-8659 | 1 | Washer-Backup |
| 1:3 | 108-8660 | 1 | Nut-Mounting |
| 1:4 | 106-5270 | 1 | Ignition Key Set |
| 1:5 | 3250-28 | 3 | Screw |
| 2 | 122-0784 | 1 | Switch-Rocker, On-Off-On |
| 3 | 95-8999 | 1 | Switch |
| 4 | 120-2244 | 1 | Hourmeter |
| 5 | 99-7420 | 2 | Plug-Hole |
| 6 | 94-5627 | 1 | Plug |
| 7 | 121-9675 | 1 | Accelerator Pedal ASM |
| 8 | 131-8388 | 1 | Socket-USB |
| 9 | 3234-29 | 3 | Screw-HHF |
| 10 | 104-8300 | 3 | Nut-HF, NI |
| 11 | 131-8381 | 1 | Gauge-Battery |
| 12 | 131-8383 | 1 | Light-Indicator |

● Not serviced separately

# Attachments and Accessories

## For 07043 Workman GTX Electric Utility Vehicle with Bucket Seat

| Product Name | Model/Part |
|---|---|
| Hose Reel Mounting Kit | 07027 |
| Trash Can Mounting Kit | 07028 |
| Walk Spreader Mounting Kit | 07029 |
| Bed Rack Kit | 07031 |
| ROPS Kit | 07032 |
| Crated Finishing Kit | 07045 |
| Cargo Bed Kit | 07046 |
| Bench Seat Base Kit | 07047 |
| Bucket Seat Base Kit | 07048 |
| Extension Kit | 07049 |
| Multi-passenger Kit | 07133 |
| Bucket Seat Base Kit (2016) | 07134 |
| Bench Seat Base Kit (2016) | 07135 |
| Canopy Kit | 07140 |
| Canopy Kit, Multi-passenger Workman GTX Utility Vehicle | 07141 |
| Cab Kit | 07142 |
| 48V Electric Lift Kit | 07143 |
| Brush Guard Kit | 07145 |
| Front Hitch Kit, Workman GTX Series Utility Vehicles with Brush Guard | 07146 |
| Front Hitch Kit, Workman GTX or MDX Series Utility Vehicles without Brush Guard | 07147 |
| Steel Flat Bed Kit | 07148 |
| Extended Bed Kit | 07149 |
| Storage Box Kit | 07156 |
| Ball Picker Mounting Bracket Kit | 07157 |
| 6in L-Track Kit | 07158 |
| 2in L-Track Kit | 07159 |
| 48V 6 Foot Bed Electric Lift Kit | 07168 |
| Aggressive Tire Kit | 07423 |
| Tire-20 8.00-10 | 116-7333 |
| Hand Pump Hose Asm | 131-8522 |
| Reverse Alarm Kit | 131-8549 |
| Power Point Kit | 131-8550 |
| Power Converter Kit | 133-0959 |
| Horn Kit | 133-3017 |
| Class 1 Draw Bar Kit | 133-3095 |
| Mount-Ball | 133-7116 |
| Brake and Signal Light Kit | 133-7127 |
| Road Light and Homologation Kit | 133-7128 |
| Front Spring Kit | 133-7145 |
| Canopy Mount Kit, Workman GTX Utility Vehicle with Extended Flatbed | 133-7160 |
| Cab Mount Kit, Workman GTX Utility Vehicle with Extended Flatbed | 133-7198 |
| Service Hood ASM | 133-7209 |
| Seat Hinge Kit | 133-7346 |
| MVP Kit 400 Hour | 136-6280 |
| Small Bedrack Mount Grip Kit | 136-6311 |
| Large Bedrack Mount Grip Kit | 136-6312 |

# Attachments and Accessories (continued)

Wireless Hourmeter Kit ..... 136-6324
Optional Rear Tire GTX-K500 ..... 137-2785
Deionizer-Water ..... 137-2884
Plate-Skid ..... 137-2887-03

**Notes:**

**Notes:**

**Notes:**

TORO®

Count on it.