FORM NO. 3317–121GB REV B

TORO®

5 H.P. Vacuum/Blower

Model No. 62924 – 5900001 & Up

Operator's Manual

IMPORTANT: Read this manual carefully. It contains information about your safety and the safety of others. Also become familiar with the controls and their proper use before you operate the product.

Introduction

Thank you for purchasing a Toro product.

All of us at Toro want you to be completely satisfied with your new product, so feel free to contact your local Authorized Service Dealer for help with service, genuine Toro parts, or other information you may require.

Whenever you contact your Authorized Service Dealer or the factory, always know the model and serial numbers of your product. These numbers will help the Service Dealer or Service Representative provide exact information about your specific product. You will find the model and serial number decal located in a unique place on the product as shown below.

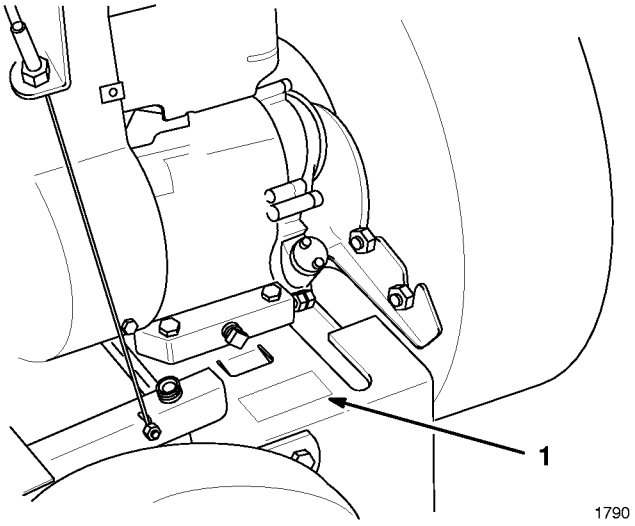

1. Model and Serial Number Decal

For your convenience, write the product model and serial numbers in the space below.

Model No: _____

Serial No. _____

Read this manual carefully to learn how to operate and maintain your product correctly. Reading this manual will help you and others avoid personal injury and damage to the product. Although Toro designs, produces and markets safe, state-of-the-art products, you are responsible for using the product properly and safely. You are also responsible for training persons who you allow to use the product about safe operation.

The Toro warning system in this manual identifies potential hazards and has special safety messages that help you and others avoid personal injury, even death. DANGER, WARNING and CAUTION are signal words used to identify the level of hazard. However, regardless of the hazard, be extremely careful.

DANGER signals an extreme hazard that will cause serious injury or death if the recommended precautions are not followed.

WARNING signals a hazard that may cause serious injury or death if the recommended precautions are not followed.

CAUTION signals a hazard that may cause minor or moderate injury if the recommended precautions are not followed.

Two other words are also used to highlight information. “Important” calls attention to special mechanical information and “Note” emphasizes general information worthy of special attention.

The left and right side of the machine is determined by standing behind the handle in the normal operator’s position.

©The Toro Company – 1995, Rev. 1996
All Rights Reserved

Printed in USA

Contents

	Page
Safety	3
Safe Operating Practices	3
Symbol Glossary	5
Assembly	7
Loose Parts	7
Install Upper Handle and Controls	8
Install Discharge Chute and Bag	9
Install Snout	10
Before Starting	11
Oil	11
Gasoline	12
Operation	13
Starting Engine	13
Stopping Engine	13
Adjusting Intake Housing	13
Traction Control	14
Emptying Vacuum Bag	14
Bag Vent	15
Converting from Vacuum to Blower	15

	Page
Maintenance	17
Changing Engine Oil	17
Draining Gasoline	17
Servicing Air Cleaner	18
Lubricating Caster Wheels and Pivot Points	18
Greasing Rear Idler Assembly	18
Cleaning Cooling Fins	19
Replacing Spark Plug	19
Adjusting Carburetor	19
Adjusting Drive Belt	20
Replacing Drive Belt	20
Adjusting Traction Drive	22
Storage	23
Fuel	23
Engine	23
Cleaning	23
General	23
Removing from Storage	24

Safety

The machine is designed and tested to offer reasonably safe service, provided it is operated in strict accordance with the following Safety Instructions. However, improper use or maintenance by the operator or owner can result in injury. To reduce the potential for injury, comply with these safety instructions and always pay attention to the safety alert ⚠ symbol which means CAUTION, WARNING or DANGER — "personal safety instruction." Failure to comply with the instruction may result in personal injury.

Safe Operating Practices

⚠ WARNING

POTENTIAL HAZARD
- **Engine exhaust contains carbon monoxide, which is an odorless, deadly poison.**

WHAT CAN HAPPEN
- **Carbon monoxide can kill you and is also known to the State of California to cause birth defects.**

HOW TO AVOID THE HAZARD
- **Do not run engine indoors or in an enclosed area.**

Note: This engine is NOT equipped with a spark arrester muffler. Use or operation of this mower in the State of California on any forest-covered, brush-covered or unimproved grass-covered land, without an approved spark arrester muffler, is a violation of the law. Other states may have similar laws.

General Operation

1. Read this manual carefully before operating the vacuum/blower. Become familiar with the controls and proper use of the vacuum/blower. Never allow children under 16 years of age to operate the vacuum/blower. Never allow adults to operate vacuum/blower without proper instructions.

2. The operator of the vacuum/blower is responsible for keeping everyone, especially children and pets, away from area of operation. The operator is responsible for accidents or hazards occurring to other people or their property.

3. Thoroughly inspect the area where vacuum/blower will be used. Clear work area of objects which may be picked up and thrown, or which may wrap around the impeller.

4. Wear long pants and substantial shoes. Do not operate vacuum/blower while wearing open-toed shoes, jewelry, loose clothing or when barefoot.

5. Check fuel level before starting engine. Do not fill fuel tank indoors, when the engine is running, or until engine cools for several minutes after running. Do not smoke while refueling. Wipe up spilled gasoline before starting engine.

6. Keep all guards, shields and safety devices in place. Repair or replace damaged parts, including decals. Check all safety devices before each use.

7. Familiarize yourself with the controls. Know how to stop the engine and disengage controls quickly.

8. Because fuel is highly flammable, handle it carefully.

   A. Use an approved container.

   B. Fill fuel tank outdoors, not indoors. **NEVER ADD FUEL TO AN ENGINE THAT IS RUNNING OR HOT.**

   C. Install gas cap on fuel container and gas tank, and wipe up any spilled gasoline before starting engine.

   D. Do not smoke while refueling.

While Operating

1. Do not run engine indoors.

2. Start the engine carefully according to instructions.

3. Always maintain secure footing. Keep a firm grip on the handle and walk; never run. Operate vacuum/blower in daylight or in good artificial light.

4. Always wear safety glasses or eye shields during operation to protect eyes from foreign objects that may be thrown from the machine.

5. Keep face, hands, feet, and any other part of your body or clothing away from concealed, moving, or rotating parts. Stay behind the handle while operating the vacuum/blower. STAY CLEAR OF DISCHARGE OPENING AT ALL TIMES.

6. Use extreme caution when pulling the vacuum/blower toward you.

7. Stay behind the handle until the engine stops and keep clear of discharge opening at all times.

8. Shut engine off and stay behind handle until all moving parts stop before unclogging chute.

9. Stop engine before leaving the operator's position — behind the handle. Disconnect wire from spark plug if vacuum/blower will be unattended.

10. Do not touch engine while it is running or shortly after it is stopped because engine will be hot enough to cause a burn.

11. If vacuum/blower must be lifted to be transported, turn off engine and stay behind the handle until all moving parts stop.

12. Do not attempt to make adjustments while engine is running.

13. Fan continues to turn for a few seconds after the engine is shut off. Do not place any part of the body in the fan area until you are sure the fan has stopped turning.

14. Do not put hands into the bag when the fan is turning.

15. Do not operate the vacuum/blower without the bag or blower discharge chute in place.

16. Stop engine before emptying bag.

17. Stop engine and disconnect spark plug wire before removing bag, cleaning discharge chute, removing obstacles, or when leaving machine. Check the bag frequently for wear or deterioration. If bag is damaged, replace with a new Toro bag for safe operation.

18. When machine is converted to a blower, be sure intake cover is in place and properly mounted. Do not stand in front of discharge area while machine is in operation.

19. Before adjusting, cleaning, repairing and inspecting the vacuum/blower, and before unclogging the discharge guide, shut engine off and wait for all moving parts to stop.

20. Before performing any maintenance or servicing the vacuum/blower, shut engine off and wait for engine and all moving parts to stop. Disconnect spark plug wire.

21. Should excessive vibration develop, stop the engine and check the impeller and crankshaft immediately. DO NOT OPERATE THE VACUUM/ BLOWER WITH A DAMAGED IMPELLER OR CRANKSHAFT.

22. Keep all nuts, bolts, and screws tight to assure vacuum/blower is in safe working condition. Be sure to check the impeller and engine mounting bolts.

23. ALWAYS USE TORO REPLACEMENT PARTS AND ACCESSORIES TO ASSURE SAFETY AND OPTIMUM PERFORMANCE. NEVER USE "WILL-FIT" REPLACEMENT PARTS AND ACCESSORIES.

Sound Emissions

This unit has a maximum airborne noise emission at operator ear of 90 dBA. This value is based on measurements of identical machines per ANSI B71.5-1984.

Vibration Level

This unit has a maximum vibration level of 7.71 m/s^2, based on measurement of identical machines.

Symbol Glossary

Safety alert triangle — symbol within triangle indicates a hazard



Safety alert symbol



Read operator's manual



Consult technical manual for proper service procedures



Stay a safe distance from the machine

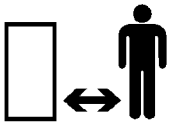

Stay a safe distance from the vacuum/blower



Thrown or flying objects — Whole body exposure



Impeller blade can sever fingers or hand



Do not open or remove safety shields while engine is running

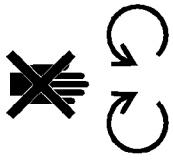

Engine stop



Choke

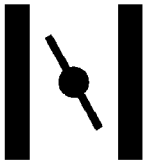

Fast



Slow



Engage

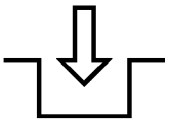

High

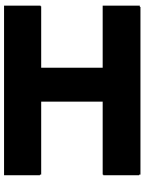

Low



Vacuum/blower height adjustment

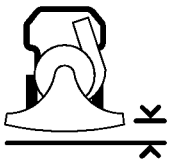

Wheel traction

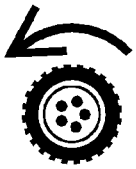

Depress lever to engage traction unit



Assembly

Loose Parts

Note: Use the chart below to verify all parts have been shipped with unit.

DESCRIPTION	QTY	USE
Upper handle assembly	1	Install upper handle
Bag support	1	
Hex head bolt 5/16-18 x 1-1/2”	4	
Lock nut 5/15-18	4	
Hex head bolt 1/4-20 x 1-13/4”	1	Install rope guide
Lock nut 1/4-20	1	
Rope guide	1	
Hex head bolt 1/4-20 x 3/4”	1	Install traction control wire
Lock nut 1/4-20	1	
Height control rod	1	Install height control rod
Hair pin cotter	2	
Self tapping screw	2	Install throttle control assembly
Star washer	2	
Nylon spacer	2	
Cable tie	1	
Hex head bolt 1/4-20 x 3/4”	1	Install discharge chute
Lock washer 1/4	1	
Debris bag	1	
Blower exhaust chute	1	Install blower attachment
Blower intake screen	1	
Registration Card	1	Fill out and return to Toro
Operator’s Manual	1	Read before operating machine

Specifications and design subject to change without notice.

Determine left and right sides of the unit by standing in the normal operator's position.

Note: The machine is partially assembled as a lawn vacuum. The blower intake and blower exhaust are not used with the vacuum. To set the machine up as a blower, see Converting From Vacuum to Blower section.

Install Upper Handle and Controls

1. Attach upper handle to lower handle with four capscrews and locknuts (Fig. 1). Secure bag support to inside of lower handle while mounting handle.

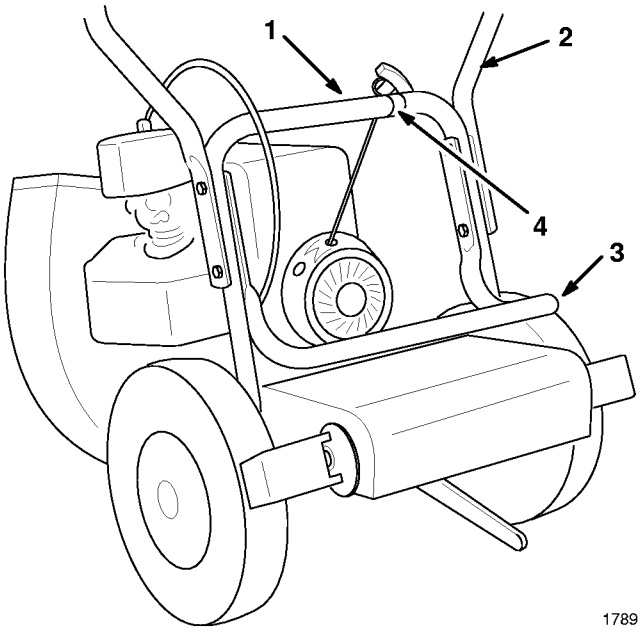

Figure 1

1. Lower handle
2. Upper handle
3. Bag support
4. Rope guide

2. Secure starter rope guide to lower handle with bolt and locknut. Pull starter rope through guide (Fig. 2).

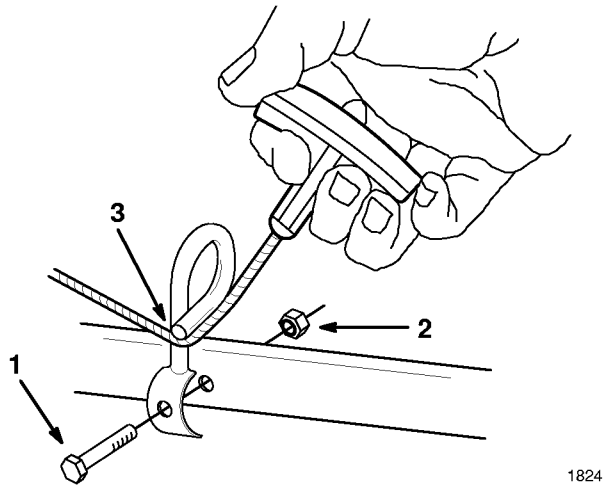

Figure 2

1. Bolt
2. Locknut
3. Pull rope through rope guide

3. Hook lower end (ball end) of the traction control wire in keyhole slot in arm on the traction drive guard (Fig. 3). Secure ball in keyhole slot with screw and nut (Fig. 3).

Note: Make sure ball end of cable is not between screw head and drive guard.

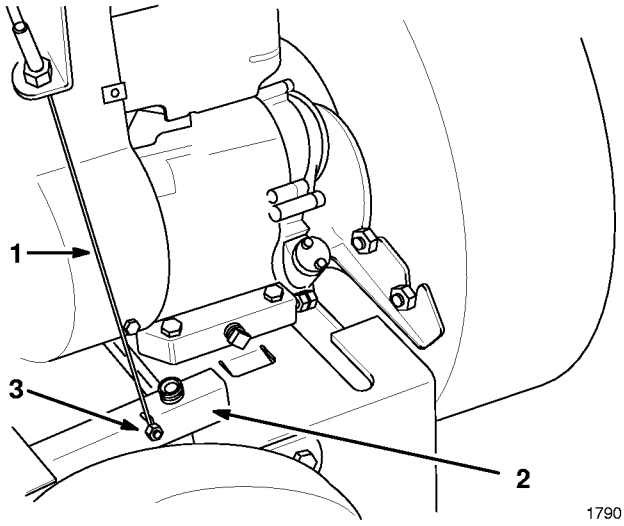

Figure 3

1. Traction control wire
2. Traction drive guard
3. Screw and nut

4. Secure lower end of height control rod to bracket on front wheel support with hair pin cotter (Fig. 4).

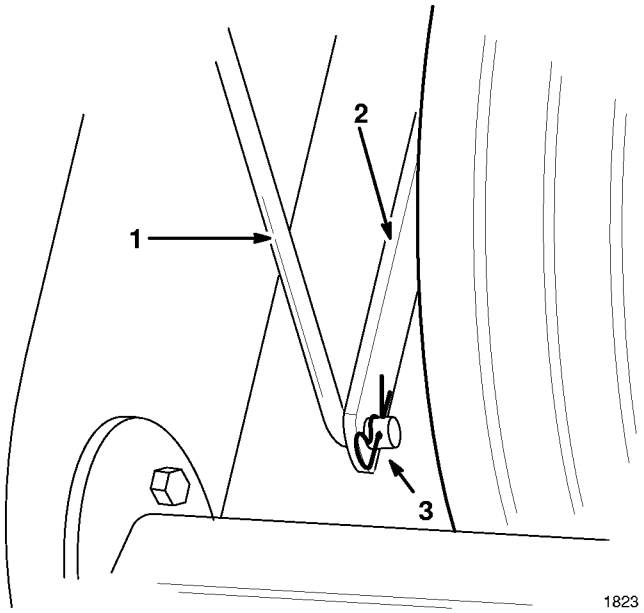

Figure 4

1. Height control rod
2. Front wheel support bracket
3. Hair pin cotter

5. Secure upper end of height control rod to height adjustment handle with hair pin cotter (Fig. 5).

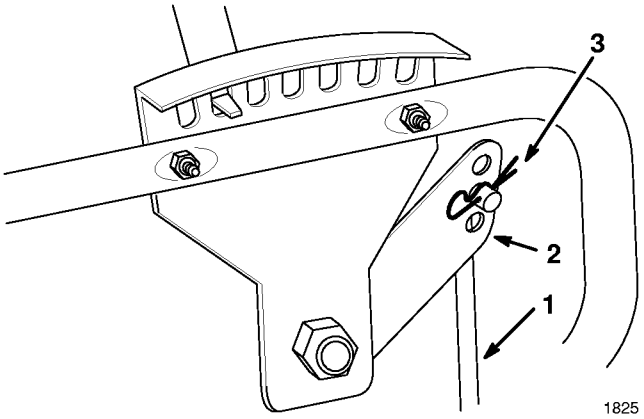

Figure 5

1. Height control rod
2. Height adjustment handle
3. Hair pin cotter

6. Attach the throttle control assembly to the outside of the left side of the upper handle with two self-tapping screws, star washers, and nylon spacers (Fig. 6).

7. Secure the cable to the handle with the cable tie (Fig. 6).

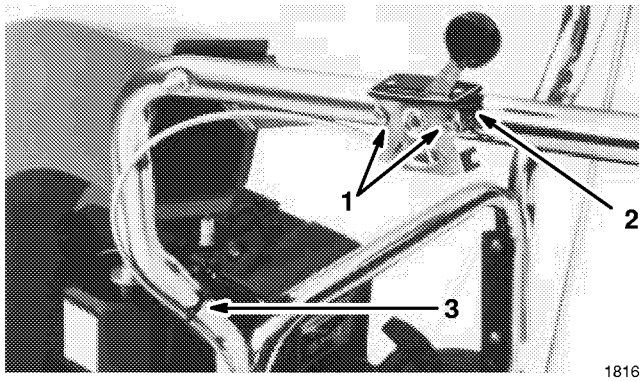

Figure 6

1. Self-tapping screws and star washers
2. Nylon spacers
3. Cable tie

Install Discharge Chute and Bag

1. Install discharge chute and secure with 1/4" hex screw and lockwasher (Fig. 7).

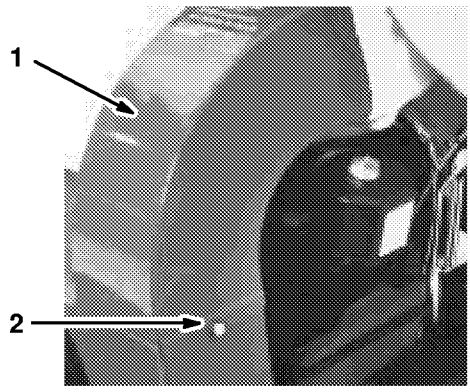

Figure 7

1. Chute
2. 1/4" hex screw and lockwasher

2. Position bag onto handle, hooking grommets over pins, and bag strap over handle (Fig. 8).

3. Slip elasticized neck of bag over the flanges on chute (Fig. 8).

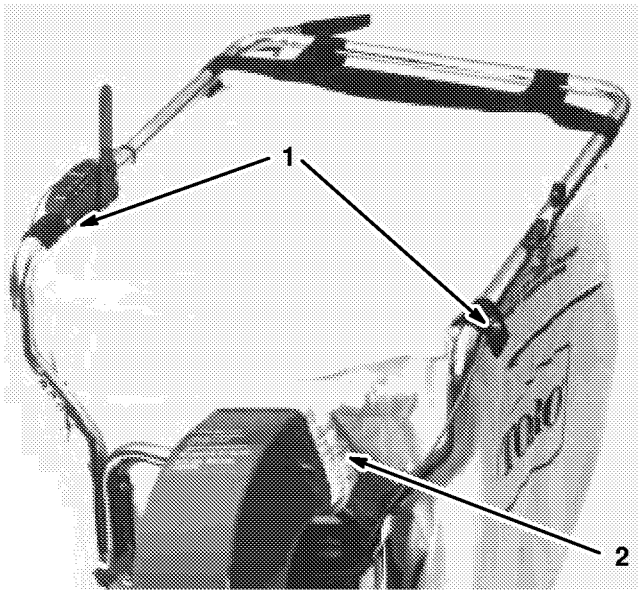

Figure 8

1. Grommets
2. Elasticized neck

Install Snout

1. Mount lower edge of snout flange into mounting bracket.
2. Secure snout to blower with washer and locknut (Fig. 9).

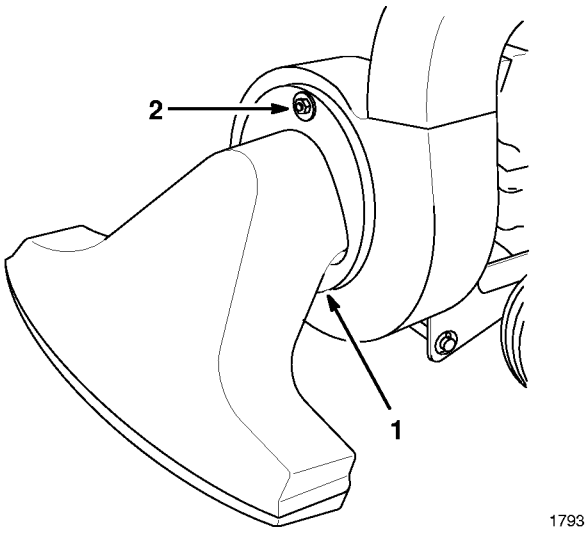

Figure 9

1. Lower edge of flange
2. Washer and locknut

Before Starting

Oil

The engine is shipped from the factory without oil in the crankcase. Therefore, before trying to start engine, oil must be added to the crankcase.

IMPORTANT: Check level of oil every 5 operating hours or each time unit is used. Initially, change oil after the first 2 hours of operation; thereafter, under normal conditions, change oil after every 25 hours of operation. However, change oil more frequently when engine is operated in extremely dirty conditions.

1. Move unit to a level surface to assure an accurate oil level reading.
2. Clean the area around the oil filler plug so foreign matter cannot enter filler hole when plug is removed.
3. Remove filler plug from crankcase (Fig. 9).
4. Initially, crankcase must be filled with 0.6 liters (20 ounces) of SAE 30 oil. 10W-30 oil may be substituted if SAE 30 is not available. Use any high quality detergent oil having the American Petroleum Institute (API) "service classification"— SF, SG or SH.

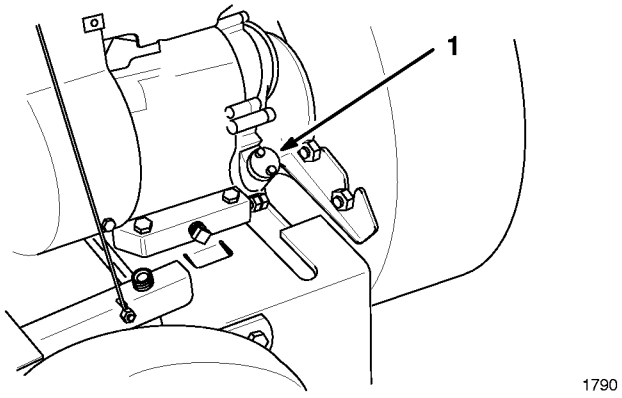

Figure 10

1. Filler plug

IMPORTANT: NO SPECIAL ADDITIVES SHOULD BE USED WITH THE RECOMMENDED OILS.

5. After crankcase is filled to point of overflowing, rock the unit gently to release any air that may be trapped in crankcase. If level of oil drops, add enough oil to bring oil back up to the point of overflowing.
6. Install filler plug into opening in crankcase. Wipe up any oil that may have spilled.

Gasoline

⚠ DANGER

POTENTIAL HAZARD
- **In certain conditions gasoline is extremely flammable and highly explosive.**

WHAT CAN HAPPEN
- **A fire or explosion from gasoline can burn you, others, and cause property damage.**

HOW TO AVOID THE HAZARD
- **Use a funnel and fill the fuel tank outdoors, in an open area, when the engine is cold. Wipe up any gasoline that spills.**
- **Do not fill the fuel tank completely full. Add gasoline to the fuel tank until the level is 1/4" to 1/2" (6 mm to 13 mm) below the bottom of the filler neck. This empty space in the tank allows gasoline to expand.**
- **Never smoke when handling gasoline, and stay away from an open flame or where gasoline fumes may be ignited by a spark.**
- **Store gasoline in an approved container and keep it out of the reach of children.**
- **Never buy more than a 30-day supply of gasoline.**

Note: Do not use gasoline that has been stored in an approved container from one season to the next. The Toro Company strongly recommends the use of fresh, clean, **UNLEADED** regular grade gasoline in Toro gasoline powered products. Unleaded gasoline burns cleaner, extends engine life, and promotes good starting by reducing the build-up of combustion chamber deposits. Leaded gasoline can be used if unleaded is not available.

Toro also recommends that Toro Stabilizer/ Conditioner be used regularly in all Toro gasoline powered products during operation and storage seasons. Toro Stabilizer/Conditioner cleans the engine during operation and prevents gum-like varnish deposits from forming in the engine during periods of storage.

IMPORTANT: DO NOT MIX OIL WITH THE GASOLINE. NEVER USE METHANOL, GASOLINE CONTAINING METHANOL, GASOHOL CONTAINING MORE THAN 10% ETHANOL OR WHITE GAS BECAUSE ENGINE FUEL SYSTEM DAMAGE COULD RESULT.

DO NOT USE FUEL ADDITIVES OTHER THAN THOSE MANUFACTURED FOR FUEL STABILIZATION DURING STORAGE SUCH AS TORO'S STABILIZER/CONDITIONER OR A SIMILAR PRODUCT. TORO'S STABILIZER/CONDITIONER IS A PETROLEUM DISTILLATE BASED CONDITIONER/STABILIZER. TORO DOES NOT RECOMMEND STABILIZERS WITH AN ALCOHOL BASE SUCH AS ETHANOL, METHANOL OR ISOPROPYL. ADDITIVES SHOULD NOT BE USED TO TRY TO ENHANCE THE POWER OR PERFORMANCE OF MACHINE.

1. Using a clean rag, clean area around the fuel tank cap. Remove cap from fuel tank and fill tank to within 1/2 inch (13 mm) from the top with gasoline. Reinstall fuel tank cap securely.

Operation

⚠ WARNING

POTENTIAL HAZARD
- **An uncovered discharge opening will allow objects to be thrown in operator's or bystander's direction.**

WHAT CAN HAPPEN
- **Thrown objects can cause serious injury.**

HOW TO AVOID THE HAZARD
- **Never operate the vacuum unless the bag is installed.**

Starting Engine

1. Move throttle control to CHOKE position (Fig. 11).

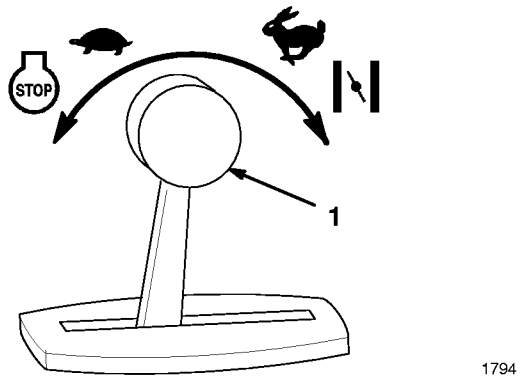

1794

Figure 11

1. Throttle control

2. Pull recoil starter handle out until positive engagement results. Pull handle vigorously to start engine and allow recoil rope to retract slowly.

IMPORTANT: Do not pull recoil rope to its limit or let go of starter handle when rope is pulled out because rope may break or recoil assembly may be damaged.

3. When engine starts, move throttle control to SLOW position until engine warms up. Then regulate engine speed as desired.

Stopping Engine

1. To stop engine, pull throttle fully to the rear to STOP position.

⚠ DANGER

POTENTIAL HAZARD
- **The impeller continues to rotate for a few seconds after the engine is shut off.**

WHAT CAN HAPPEN
- **Contact with the moving impeller can cause serious personal injury.**

HOW TO AVOID THE HAZARD
- **Do not place any part of the body in the impeller area until you are sure the impeller has stopped.**

Adjusting Intake Housing

The clearance between the air intake housing and the ground surface may be adjusted to any of seven positions by moving height adjustment control to desired position. The range of adjustment allows the use of this machine to vary from vacuuming hard surfaces such as sidewalks or driveways, to thick lush turf with a heavy covering of leaves or clippings. The effectiveness of a vacuum depends on creating a "near vacuum" with the ground, so keep the intake as low as is practical.

1. Stop engine.
2. Tip the machine slightly to the rear to take the weight off the castor wheels while adjusting.
3. Move the height adjustment control forward to lower the intake housing; move to the rear to raise the housing (Fig 12).

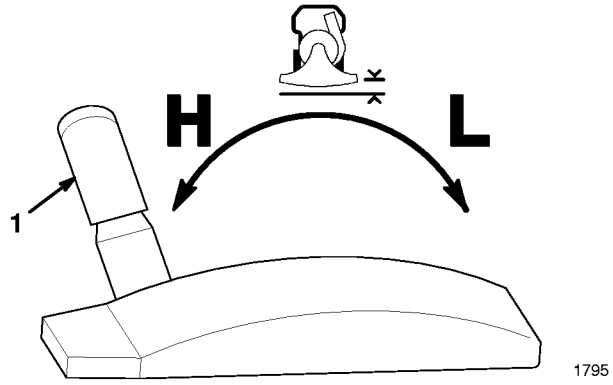

Figure 12

1. Height adjustment control

Traction Control

The traction control must be held down to engage the traction drive. When the control is released, the traction drive is disengaged (Fig. 13).

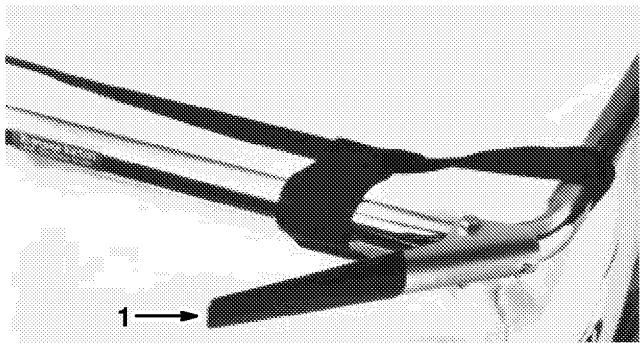

Figure 13

1. Traction control lever (disengaged)

Emptying Vacuum Bag

After the bag is filled with grass clippings, leaves, or other debris, it is not necessary to remove the bag to empty it. STOP THE ENGINE, unzip the side of the bag and dump the contents (Fig. 14). Close zipper before starting engine.



Figure 14

1. Zipper for emptying

⚠ WARNING

POTENTIAL HAZARD

- **A worn grass bag could allow small stones and other similar debris to be throw in operator's or bystander's direction.**

WHAT CAN HAPPEN

- **Thrown objects can cause serious personal injury or death to operator or bystanders.**

HOW TO AVOID THE HAZARD

- **Check the grass bag frequently. If it is damaged, install a new genuine TORO replacement bag.**

Bag Vent

The bag is provided with a zippered vent. When vacuuming an area which is basically free of dust, the side vent should be open to allow free movement of air to enable the vacuum to operate at maximum efficiency. When vacuuming a dusty area the vent should be closed (Fig. 15).

IMPORTANT: Keep the inside of the bag clean to allow the air to circulate properly.

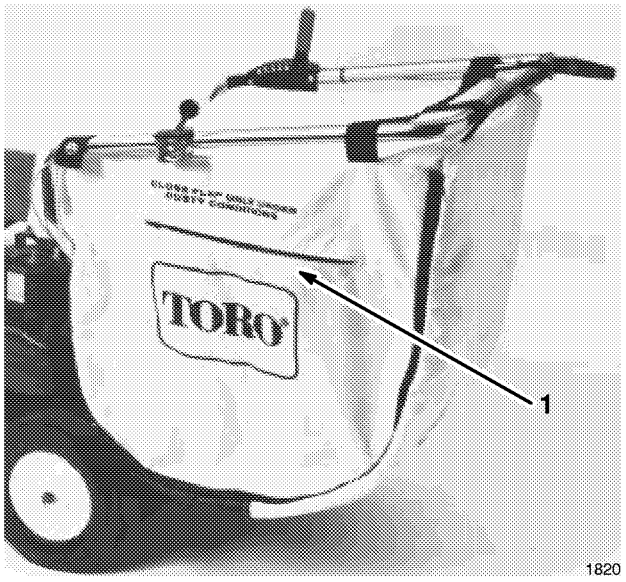

Figure 15

1. Bag vent

Converting from Vacuum to Blower

Under some conditions, it will be advantageous to convert the vacuum to a blower. If the surface is uneven, it may be difficult for the vacuum snout to create a "near vacuum" with the ground. If there are many obstacles in the area, or if the area is very large, a blower may be more efficient.

1. Stop engine.
2. Remove locknut, washer, and snout (Fig. 16).
3. Remove bag neck from blower discharge chute (Fig. 16). (The entire bag may be removed if desired.)
4. Remove blower discharge chute (Fig. 16).
5. Install blower exhaust. Secure with chute retaining screw and lockwasher (Fig. 16).

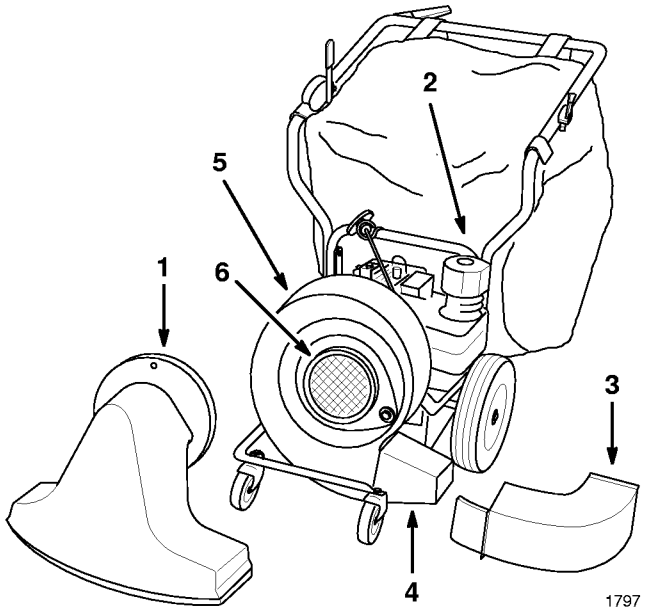

Figure 16

1. Remove snout
2. Remove bag neck from chute
3. Remove blower discharge chute
4. Install blower exhaust
5. Rotate housing
6. Install blower intake screen

6. Remove flanged locknut securing blower housing to engine bracket (Fig. 17).
7. Remove two locknuts securing housing to engine bracket. Remove engine bracket and place nearby for reuse. Then reinstall locknuts on housing mounting studs (Fig. 17).

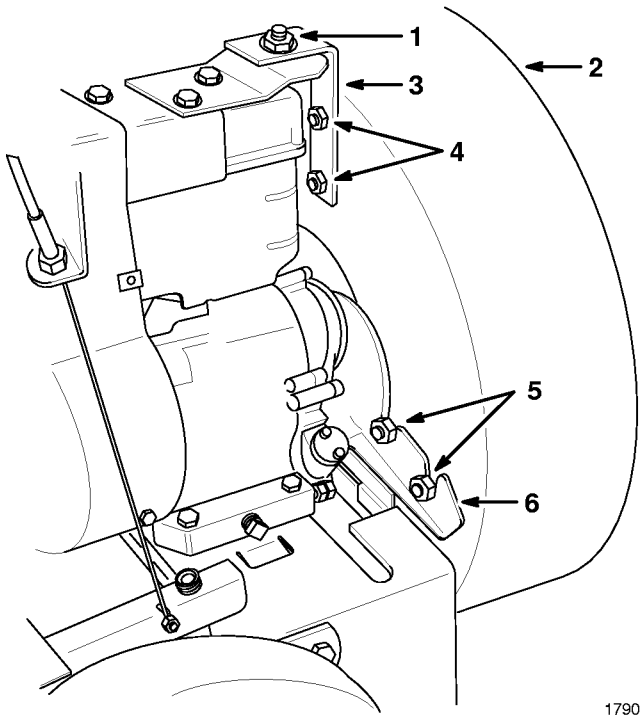

Figure 17

Housing in Vacuum Position

1. Flanged locknut
2. Housing
3. Engine bracket
4. Locknuts and housing mounting studs
5. Locknuts
6. Stabilizer bracket

8. Remove two locknuts securing housing to stabilizer bracket (Fig. 17).

9. Lift blower housing slightly and rotate it 120° clockwise (as you face the blower) (Fig. 16).

10. Reseat housing, nesting lower blower housing mounting bracket onto front edge of engine base (Fig. 18). Make sure the lower housing bracket nests into the front edge of the base.

11. Reinstall engine bracket on housing mounting studs with two locknuts. Reinstall flanged locknut on top of engine bracket (Fig. 18).

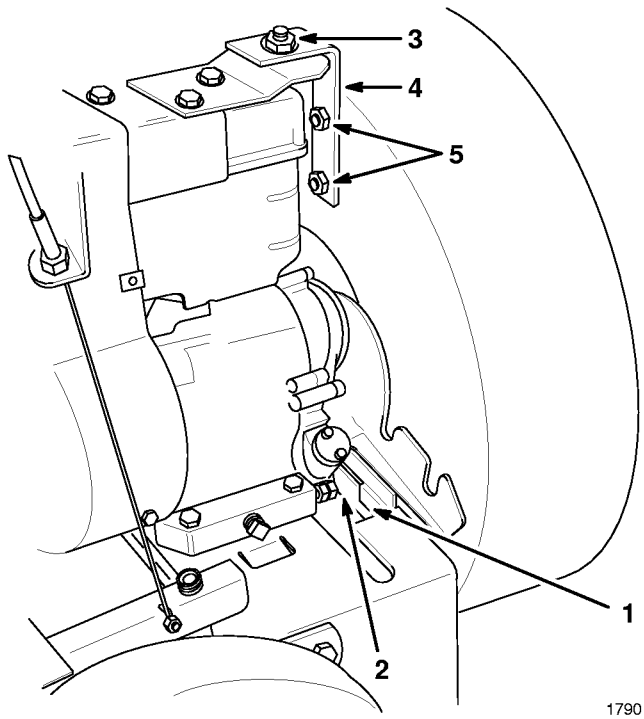

Figure 18

Housing in Blower Position

1. Lower blower housing mounting bracket
2. Front edge of engine base
3. Flanged locknut
4. Engine bracket
5. Locknuts and housing mounting studs

12. Install blower intake screen Secure it with washer and locknut removed with snout. (Fig. 16).

⚠ CAUTION

POTENTIAL HAZARD

- **The air stream comes out of the blower in excess of 100 mph.**

WHAT CAN HAPPEN

- **Close contact with the air stream can cause bodily injury or property damage.**

HOW TO AVOID THE HAZARD

- **Make sure the air stream is not aimed directly at anybody or anything.**

Maintenance

⚠ CAUTION

POTENTIAL HAZARD
- **If you leave the wire on the spark plug, someone could start the engine.**

WHAT CAN HAPPEN
- **Accidental starting of engine could seriously injure you or other bystanders.**

HOW TO AVOID THE HAZARD
- **Pull wire off spark plug before you do any maintenance. Also push wire aside so it does not accidentally contact spark plug.**

Changing Engine Oil

Check oil level after every 5 hours of operation or each time vacuum/blower is used. Change oil after the first 2 hours of operation; thereafter, under normal conditions, change oil after every 25 hours of operation. However, change oil more frequently when engine is operated in dusty or dirty conditions. If possible, run engine just before changing oil because warm oil flows better and carries more contaminants than cold oil.

1. Stop engine.
2. Pull wire off spark plug (Fig. 19).

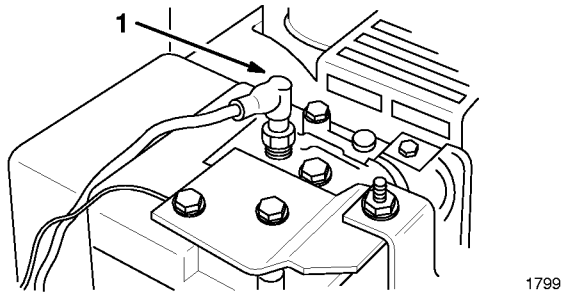

Figure 19

1. Spark plug wire

3. Clean area around drain plug (Fig. 20).

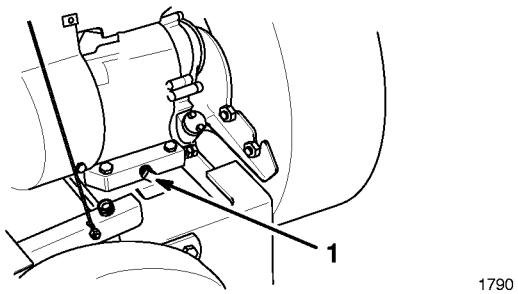

Figure 20

1. Drain plug

4. Remove oil drain plug and allow oil to flow into drain pan.
5. After oil is drained, reinstall drain plug and wipe up any oil that spilled.
6. Move the blower to a level surface and fill crankcase with oil; refer to the Fill Crankcase with Oil section.

Draining Gasoline

⚠ CAUTION

POTENTIAL HAZARD
- **If gasoline is spilled on a hot engine, it could ignite.**

WHAT CAN HAPPEN
- **Contact with burning gasoline could cause serious personal injury.**

HOW TO AVOID THE HAZARD
- **Drain gasoline from a cold engine only.**

1. Stop engine. Pull wire off spark plug.
2. Remove cap from fuel tank and use a pump-type syphon to drain gasoline into a clean gas can.

   Note: This is the only recommended method of draining gasoline.

Servicing Air Cleaner

Check foam element before each use. Normally, clean paper cartridge every three months or every 25 operating hours. More frequent cleaning is required when machine is operated in dusty or dirty conditions.

1. Stop engine. Pull wire off spark plug.

2. Unscrew knob and lift off air cleaner cover (Fig. 21).

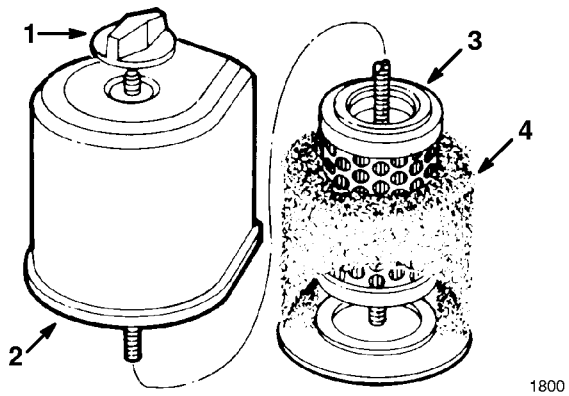

Figure 21

1. Knob
2. Cover
3. Paper element
4. Foam element

3. Slide foam element off paper cartridge and clean thoroughly.

   A. WASH foam element in a solution of liquid soap and warm water. Squeeze to remove dirt, but do not twist because foam may tear. Rinse thoroughly in clear water.

   B. DRY by wrapping in a clean rag. Squeeze rag and foam element to dry.

   C. SATURATE element with SAE 30 engine oil. Squeeze element to remove excess oil and to distribute oil thoroughly. A damp element is desirable.

4. Reinstall foam element over paper cartridge. Reinstall air cleaner cover and tighten securely in place with knob.

IMPORTANT: Do not operate engine without air cleaner element otherwise extreme engine wear and damage will likely result.

Clean the paper filter by tapping it gently on a flat surface. If very dirty, replace cartridge.

Note: Do not oil paper cartridge. Do not use pressurized air to clean cartridge.

Lubricating Caster Wheels and Pivot Points

1. Stop engine.

2. Place a few drops of engine oil in each of the caster wheel bushings and where front wheel support pivots in engine base. Also, oil where rear traction shafts pivot in engine base (Fig. 22).

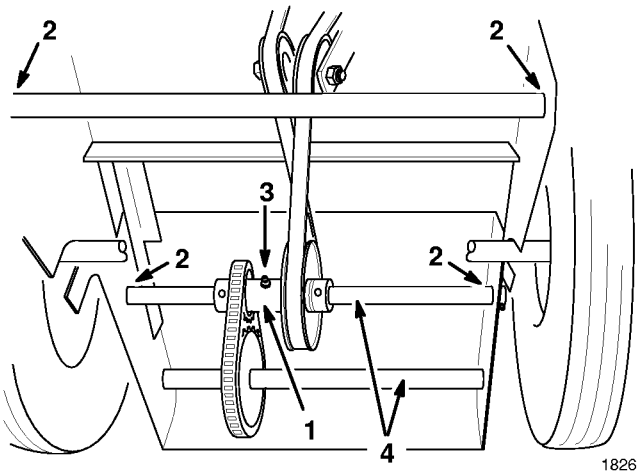

Figure 22

1. Rear idler assembly
2. Oil point
3. Grease point
4. Traction shafts

Greasing Rear Idler Assembly

Lubricate the rear idler assembly with No. 2 general purpose grease after every 25 hours of operation or more frequently when conditions are dusty or sandy (Fig. 22).

Cleaning Cooling Fins

Clean cooling fins regularly to prevent overheating and possible engine damage.

Replacing Spark Plug

Recommended spark plug to use is a Champion RCJ–8 or equivalent, and correct air gap is .76 mm (0.030″). Since air gap between center and side electrodes of the spark plug increases gradually during normal engine operation, remove plug after every 25 hours of engine operation and check its condition.

1. Stop engine. Pull wire off spark plug.
2. Clean area around spark plug so foreign matter does not fall into cylinder when plug is removed. Remove plug from cylinder head.

   IMPORTANT: A cracked, fouled or dirty spark plug must be replaced. Do not sand blast, scrape or clean electrodes because grit may eventually release from the plug and fall into the cylinder. The result will likely be engine damage.
3. Set air gap between electrodes at .76 mm (0.030″) (Fig. 23). Install the correctly gapped spark plug with gasket and tighten plug to 15 ft–lb (20 N·m). If torque wrench is not used, tighten plug firmly.

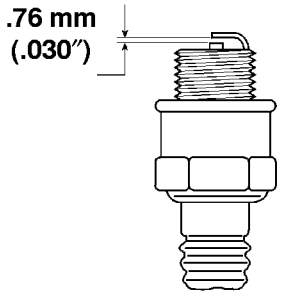

986

Figure 23

Adjusting Carburetor

The carburetor has been set at the factory, but an occasional adjustment may be required. However, do not make unnecessary carburetor adjustments, because factory settings are usually correct. An adjustment may be required to compensate for differences in fuel, temperature, and altitude.

IMPORTANT: Air cleaner must be installed on the engine whenever carburetor is being adjusted. The air cleaner mounting knob must also be installed when engine is run. Fuel tank must be half full of gasoline to get best carburetor adjustment.

1. Stop engine.
2. Close needle valve by gently rotating it clockwise (Fig. 24).

   IMPORTANT: To avoid damage to needle valve and seat in carburetor, do not close needle valve too tightly.

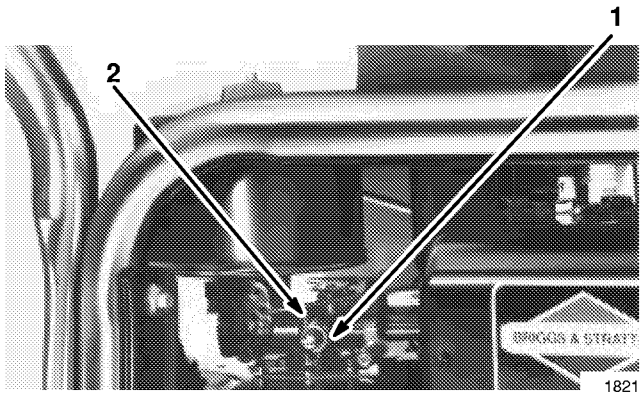

Figure 24

1. Needle valve
2. Idle adjusting screw

3. Open needle valve by rotating 1–1/2 turns counterclockwise.

   Note: The needle valve setting is approximate; however, the setting will allow engine to be started so carburetor can be fine tuned.

4. Start engine and let it warm up for approximately two minutes. Next, move throttle control to FAST position.

⚠ WARNING

POTENTIAL HAZARD
- **Engine must be running for final carburetor adjustment.**
- **Parts are moving when engine is running.**

WHAT CAN HAPPEN
- **Contact with moving parts can cause serious personal injury.**

HOW TO AVOID THE HAZARD
- **Keep hands, feet, face, and other parts of the body away from any moving parts.**

5. Rotate needle valve clockwise 1/8 turn at a time until engine starts to lose speed. Let engine react to each 1/8 turn setting.

6. Rotate needle valve counterclockwise (outward) 1/8 turn at a time until engine first starts to run rough. Let engine react to each 1/8 turn setting.

7. Rotate needle valve clockwise (inward) very slowly until engine starts to run smoothly. This setting, under no load, may be slightly rich; however, the slightly rich setting will assure proper operation when the engine is under load.

8. Move throttle control backward so engine idles. If engine stalls, rotate idle adjusting screw until engine speed increases (1750 rpm) .

   Note: Rotate idle adjusting screw clockwise to increase idle rpm. By contrast, rotate idle adjusting screw counterclockwise to decrease idle rpm (Fig. 24).

9. Check carburetor adjustment by quickly moving throttle control from idle speed to FAST position. Engine speed should increase without hesitation. If engine tends to stall or die out, rotate needle valve 1/8 turn counterclockwise until engine accelerates smoothly.

Adjusting Drive Belt

An adjustment of the drive belt may be required if loss of traction occurs or if belt slips. Check traction drive adjustment first.

1. Stop engine. Pull wire off spark plug.

2. Loosen nut and slide pulley until belt is at proper tension (Fig. 25).

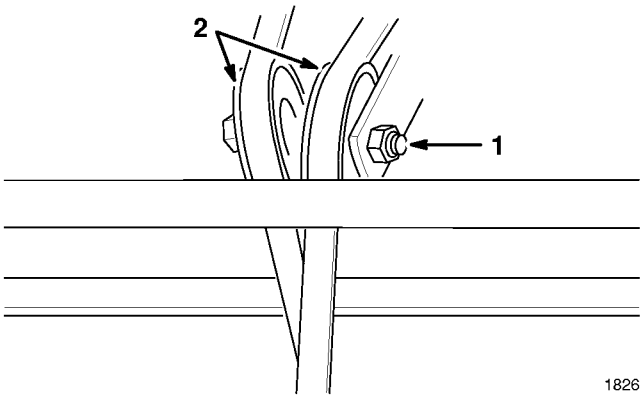

Figure 25

1. Nut 2. Pulleys

3. Tighten just enough so the belt does not slip; do not over-tighten.

4. When adjustment is used up on one pulley, use the other pulley. When adjustment is used up on both pulleys, replace the belt.

Replacing Drive Belt

1. Stop engine. Pull wire off spark plug.

2. Drain gasoline from fuel tank: refer to Draining Gasoline section.

3. Drain oil from crankcase: refer to Changing Engine Oil section.

4. Cut old belt and remove. Loosen belt tightener pulleys (Fig. 25).

5. Remove front snout (Fig. 26).

6. Slip the bag off the chute and remove chute (Fig. 26).

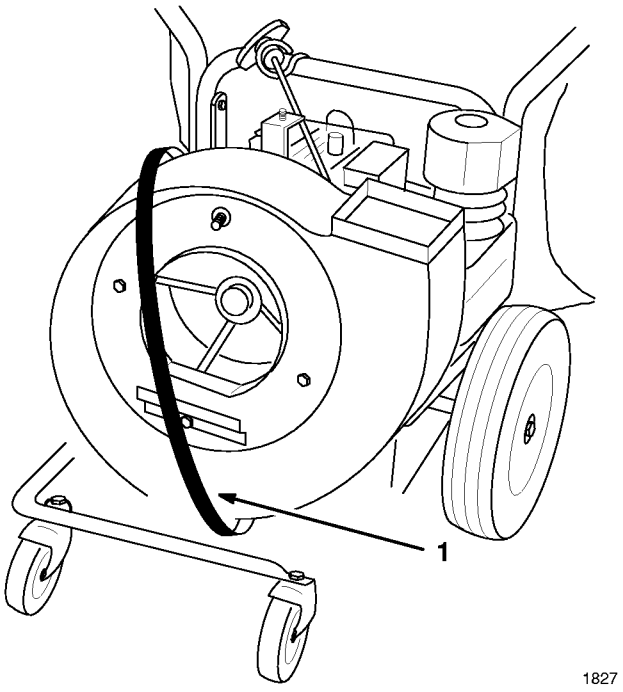

Figure 26

1. Belt around housing

7. Loosen two locknuts securing blower housing to stabilizer bracket (Fig. 27).

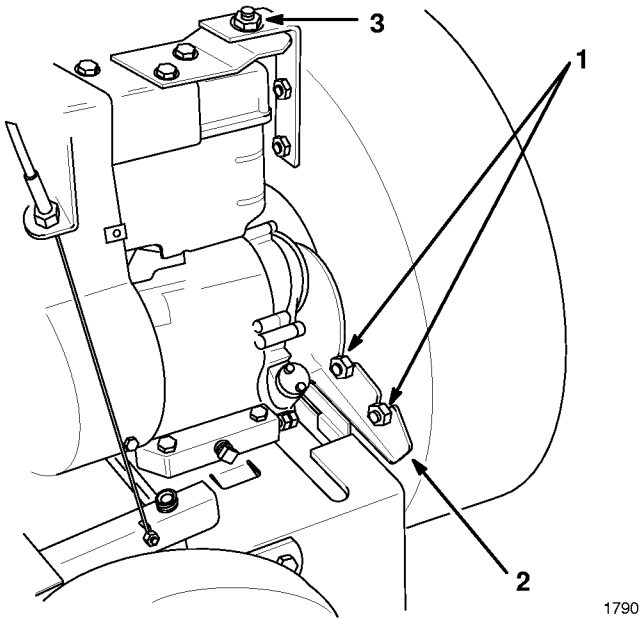

Figure 27

1. Locknuts
2. Stabilizer bracket
3. Flanged locknut

8. Remove the flanged locknut securing the blower housing and lift the housing as much as the impeller allows (Fig. 27).

9. Route the new belt around the blower housing (Fig. 26).

10. Insert the belt over the pulley and down through the opening and reinstall and secure the blower housing (Fig. 28).

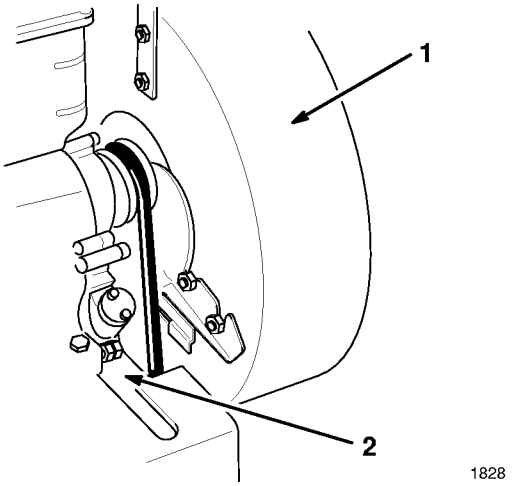

Figure 28

1. Housing
2. Feed belt down through opening

11. Refer to Figure 29. Tip the unit back onto the handles. Remove the cotter pin from the end of the shaft, loosen the set screw in each of the collars, and tap the shaft to the left far enough so the new belt can be installed.

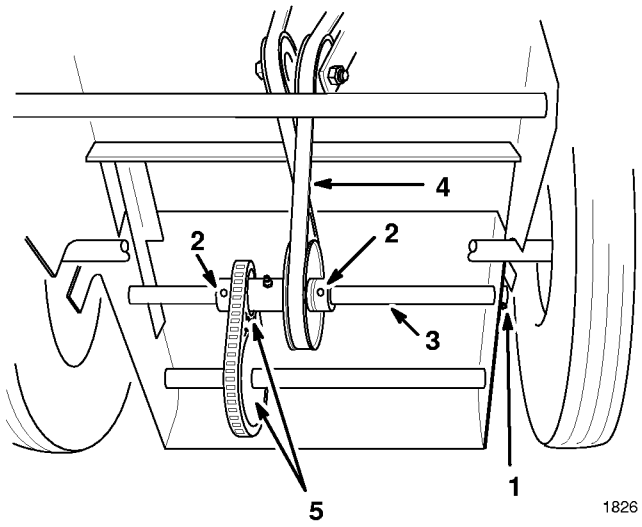

Figure 29

1. Cotter pin
2. Set screws
3. Shaft
4. Belt
5. Sprockets

12. Return shaft to its original position and secure collars with set screws and shaft with cotter pin. Make sure sprockets are aligned properly.

IMPORTANT: The belt must be installed as shown in Figure 29 or the traction drive will run backward.

13. Tighten belt as described previously.

Adjusting Traction Drive

As the friction wheels and tires experience normal wear, it will be necessary to adjust the traction drive linkage occasionally.

1. Stop engine.

2. Loosen the lower nut on the bottom side of the bracket (Fig. 30).

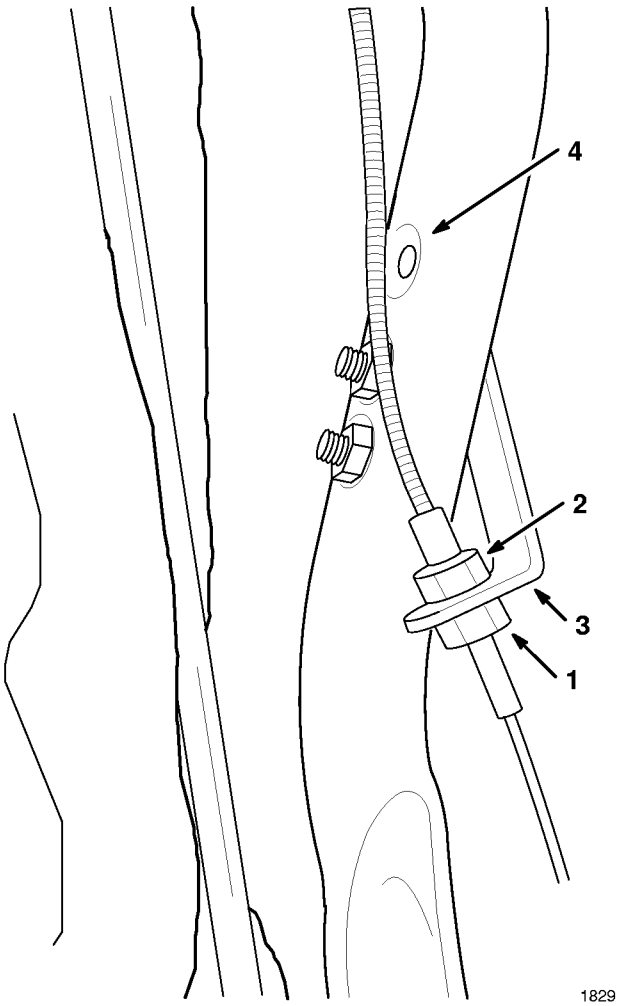

Figure 30

1. Lower nut
2. Upper nut
3. Bracket
4. Upper hole

3. Tighten the upper nut to move the cable housing upward, which in turn moves the friction wheel closer to the tire. (In effect, this shortens the cable to compensate for the wear.)

4. When the proper adjustment is attained, tighten the lower nut against the bracket to secure the adjustment.

5. When all the adjustment is taken up on the cable housing, move the bracket to the upper hole in the handle and start the adjustment procedure over again.

6. If the traction drive is adjusted, but the wheels do not turn when the lever is operated, check the belt tension adjustment.

Storage

To prepare machine for off-season storage perform recommended maintenance procedures. See MAINTENANCE chapter.

Store machine in a cool, clean, dry place. Cover machine to keep it clean and protected.

Fuel

⚠ WARNING

POTENTIAL HAZARD
- **Gasoline can vaporize if stored over long periods of time.**

WHAT CAN HAPPEN
- **Vaporized fuel can explode if it comes into contact with open flame.**

HOW TO AVOID THE HAZARD
- **Do not store gasoline (fuel) over long periods of time.**
- **Do not store machine with fuel in the tank in an enclosure with an open flame. (Example: furnace or water heater pilot light.)**
- **Allow the engine to cool before storing in any enclosure.**

For long term storage, either drain gasoline from fuel tank or use a fuel additive before storing. To drain gasoline, see MAINTENANCE chapter, Drain Gasoline section. After fuel is drained, start engine and let it idle until all fuel is consumed and engine stops. Repeat the starting procedure two more times to ensure all gas is removed from the engine. If gasoline is not drained, gum-like varnish deposits will form and cause poor engine operation, even starting problems.

Fuel can be left in gas tank only if a fuel additive, such as Toro's Stabilizer/Conditioner, is added to gasoline before storing. Toro's Stabilizer/Conditioner is a petroleum distillate based conditioner/stabilizer.

Toro does not recommend stabilizers with an alcohol base, such as ethanol, methanol or isopropyl. Use fuel additive in recommended quantities as specified on container.

Engine

1. While engine is still warm, drain oil from crankcase. See MAINTENANCE chapter, Change Engine Oil section. After all oil is drained, install drain plug, but do not fill crankcase until after cleaning or replacing air cleaner.
2. Pull wire off spark plug and clean area around the plug so foreign matter cannot fall into cylinder when plug is removed. Remove spark plug. Pour two tablespoons (10 ml) of SAE oil through spark plug hole.
3. Slowly rotate engine several times, using starter rope, to distribute oil.
4. Reinstall spark plug but DO NOT connect spark plug wire.

Cleaning

1. Clean dirt and chaff from outside of cylinder, cylinder head fins, and blower housing. Also, remove debris, dirt and grime from external parts of engine.
2. Clean or replace air cleaner. See MAINTENANCE chapter, Service Air Cleaner section.

General

1. Check and tighten all capscrews, bolts, screws, nuts and mating parts. If any part is damaged, repair or replace it.

2. Lubricate caster wheels and pivots points. See MAINTENANCE chapter, Lubricating Caster Wheels and Pivot Points section.

3. Grease rear idler assembly. See MAINTENANCE chapter, Greasing Rear Idler Assembly section.

4. Touch up all rusted or chipped paint surfaces. Toro Re–Kote paint is available from an Authorized TORO Service Dealer.

Removing from Storage

1. Check and tighten all fasteners.

2. Remove spark plug and spin engine rapidly using starter to blow excess oil from the cylinder. Clean spark plug or replace if cracked, broken or electrodes are worn.

3. Install spark plug and torque to 15 ft.-lbs. (20 N·m).

4. Perform recommended maintenance procedures. See Maintenance section.

5. Fill fuel tank with fresh, clean gasoline.

6. Check engine oil level.

7. Reconnect spark plug wire.


TORO®