Form No. 3410-422 Rev B

TORO®

Count on it.

Parts Catalog

22in Recycler®

Lawn Mower

Model No. 20332—Serial No. 400000000 and Up

Register at www.Toro.com.
Original Instructions (EN)

3410-422 B

Ordering Replacement Parts

To order replacement parts, please supply the part number, the quantity, and the description of each part desired.

Understanding Reference Numbers

Each identified part in an illustration has a reference number. The reference number for a part also appears in the parts list, along with other information about the part.

This catalog uses two special reference number formats, one to indicate parts in a service assembly and another to indicate the quantity of a given part in an illustration.

Service Assembly Reference Numbers

Parts in service assemblies have reference numbers in the form a:b. The a represents the reference number of the entire service assembly and the b represents a sequential number unique to each part within the service assembly.

For example, a wheel assembly might be identified by reference number 6, the tire by 6:1, the valve by 6:2, and the wheel by 6:3. When you order the assembly identified by reference number 6, you receive all parts identified by reference numbers 6:1,6:2, and 6:3. However, you may also order any part individually. Reference numbers of this type appear in illustration and in parts lists.

Reference Numbers Indicating Quantity

In an illustration, if a reference number indicates more than one part, the reference number has the form nX y. The n represents the quantity of the part, the X is the multiplication symbol, and the y represents the reference number.

For example, in an illustration, the reference number 2X 37 means that two of the parts identified by reference number 37 are indicated.

Contents

Deck, Side Chute and Rear Door Assembly 4
Rear Bag Assembly 6
Engine and Blade Assembly 8
Front Wheel and Height-of-Cut Assembly 10
Height-of-Cut and Rear Wheel Assembly 12
Handle Assembly 14
Attachments and Accessories 16

© 2017—The Toro® Company
8111 Lyndale Avenue South
Bloomington, MN 55420

Contact us at www.Toro.com.
Printed in the USA.
All Rights Reserved

Deck, Side Chute and Rear Door Assembly

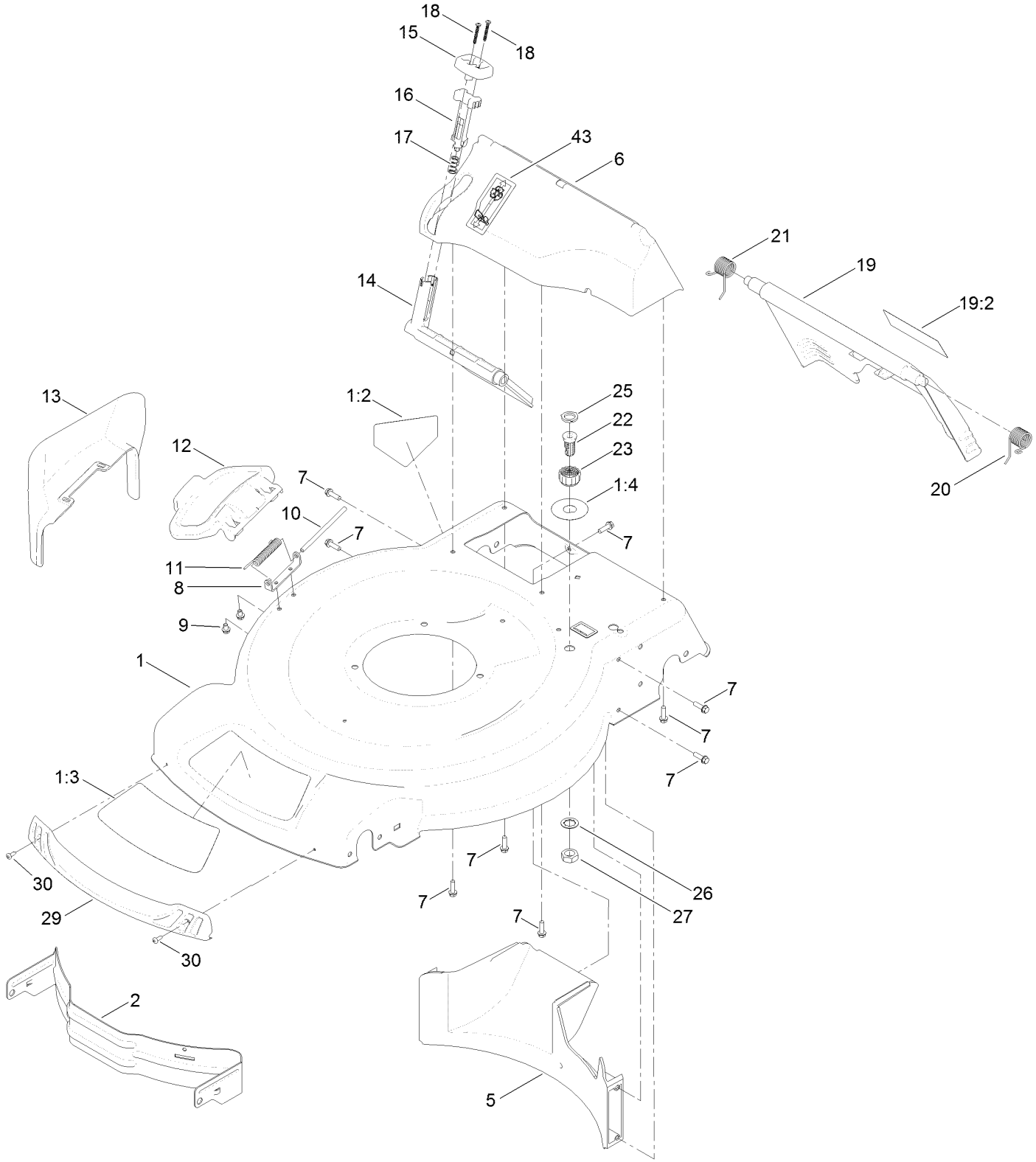

Deck, Side Chute and Rear Door Assembly (continued)

Ref.	Part Number	Qty.	Description
1	130-2389	1	Housing ASM
1:2	94-8072	1	Decal-Danger
1:3	115-4676	1	Decal-Recycler
1:4	112-8867	1	Decal-Port, Washout
2	114-7963-01	1	Baffle-Front
5	114-7961	1	Baffle-Rear
6	132-4501	1	Chute-Recycle
7	46-8091	9	Screw-HWH
8	112-6416	1	Bracket-Cover
9	99-8445	2	Screw-HWH
10	99-5291	1	Rod-Cover
11	99-5293	1	Spring-Torsion
12	115-8449	1	Deflector-Side
13	115-8447	1	Chute-Discharge, Side
14	114-7960	1	Deflector-Recycle
15	114-7958	1	Knob-Recycle
16	114-7959	1	Latch-Recycle
17	117-1031	1	Spring-Compression
18	32104-120	2	Screw-PPH
19	121-5776	1	Rear Door ASM
19:2	131-4514	1	Decal-Warning
20	115-2859	1	Spring-Torsion
21	114-7924	1	Spring-Torsion
22	112-6400	1	Port-Washout
23	112-6401	1	Coupling-Hose, Washout Port
25	112-6438	1	Washer-Seal, Washout Port
26	3254-5	1	Washer-Tooth, Internal
27	3218-6	1	Nut-Jam
29	114-7987	1	Bumper
30	105-6849	2	Screw-Forming, Thread
43	125-5026	1	Decal

Rear Bag Assembly

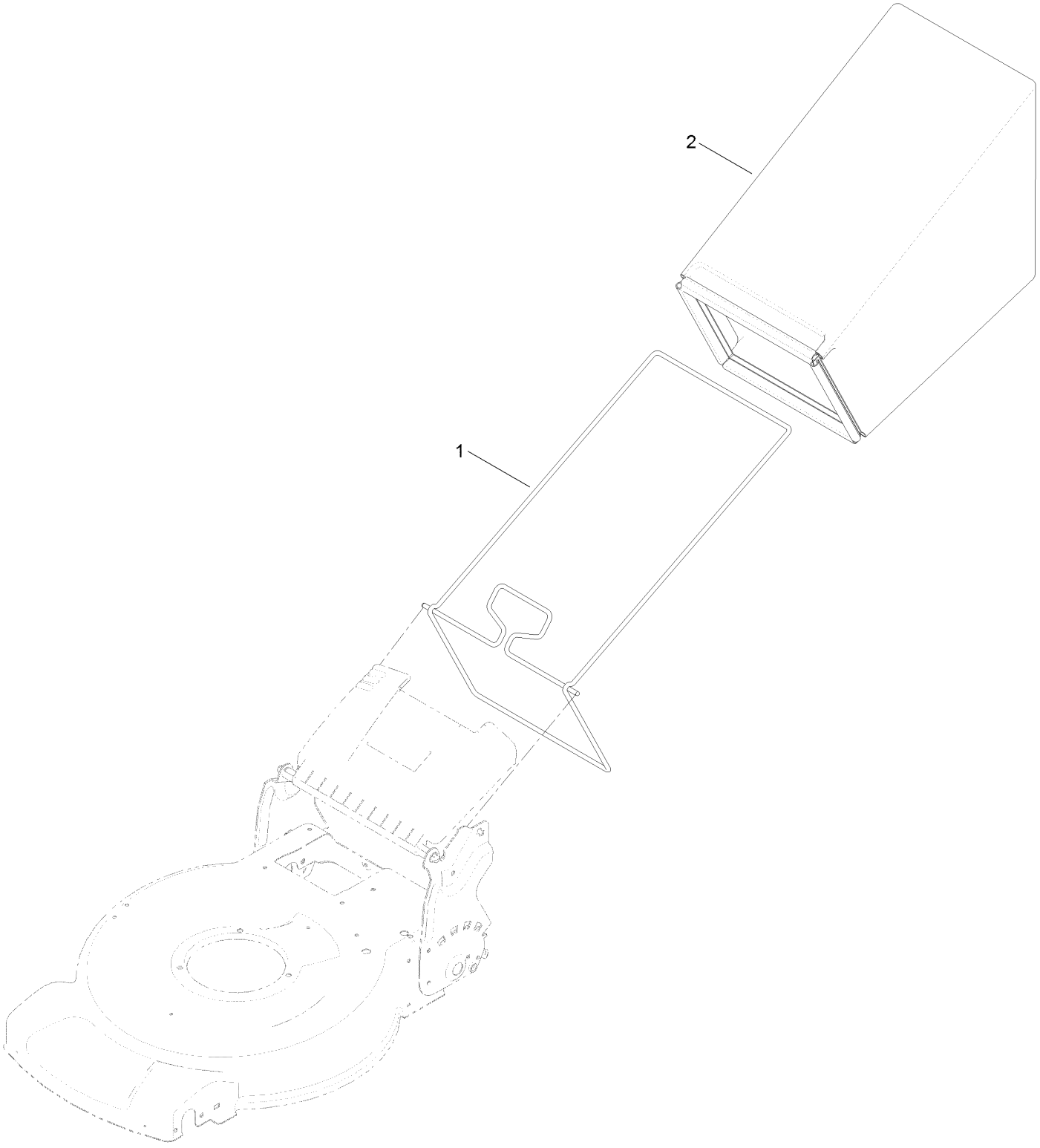

Rear Bag Assembly (continued)

Ref.	*Part Number*	*Qty.*	*Description*
1	132-4529-03	1	Bag Frame ASM
2	115-4673	1	Grass Bag ASM

Engine and Blade Assembly

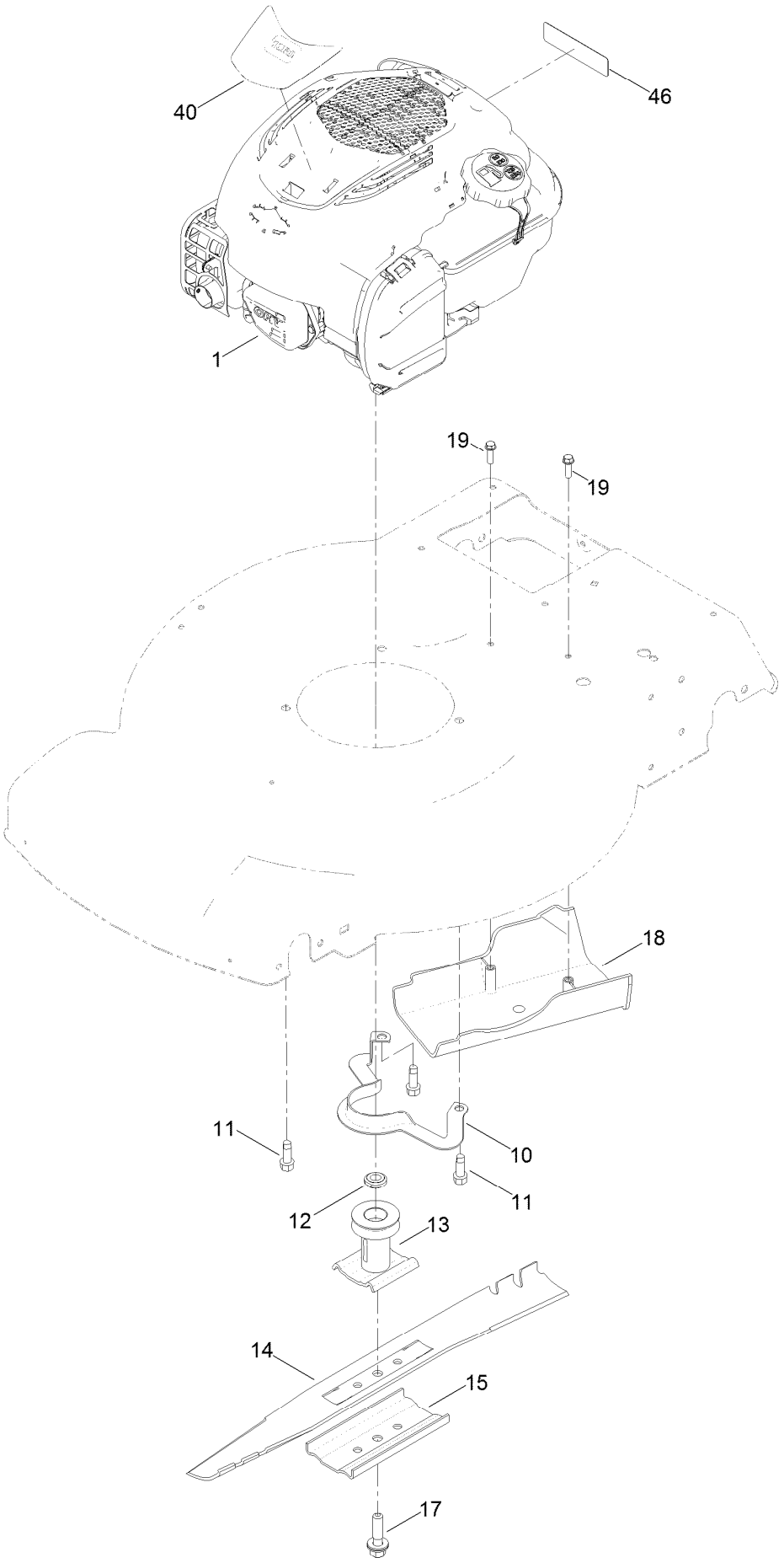

Engine and Blade Assembly (continued)

Ref.	Part Number	Qty.	Description
1		1	Engine-Briggs, 104M020010F1 ●■
10	105-3030-03	1	Guide-Belt
11	95-1726	3	Screw-Taptite
12	106-3999	1	Spacer-Driver
13	106-3987	1	Driver-Blade
14	131-4547-03	1	Blade-22 Inch
15	108-3766-03	1	Support-Blade
17	125-2466	1	Bolt-Blade
18	114-7937	1	Cover-Belt
19	46-8091	2	Screw-HWH
40	132-4520	1	Decal-Shroud
46	117-2718	1	Decal-Arrester, Spark

● Not serviced separately

■ Obtain parts from www.briggsandstratton.com

Front Wheel and Height-of-Cut Assembly

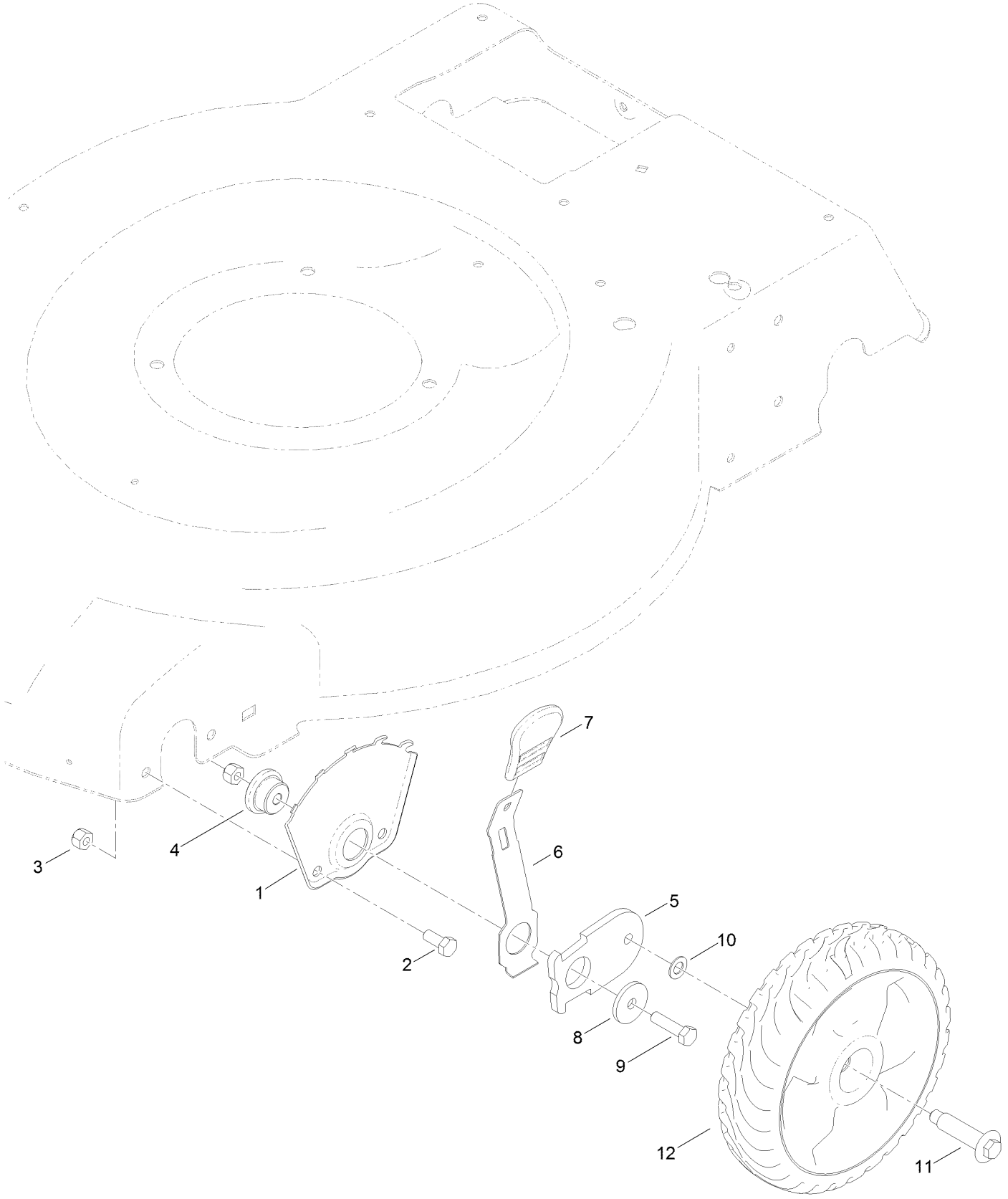

Front Wheel and Height-of-Cut Assembly (continued)

Ref.	Part Number	Qty.	Description
1	115-1956-03	2	Plate-HOC, Front
2	322-3	4	Screw-HH
3	3296-29	6	Nut-Lock, NI
4	105-1818	2	Bushing-Mount, HOC
5	105-1807	2	Arm-Pivot, Front
6	105-1809	2	Arm-Spring
7	110-0549	2	Knob-HOC
8	105-3048	2	Washer-Flat
9	322-6	2	Screw-HH
10	40-1940	2	Washer
11	614650	2	Bolt-Shoulder
12	115-2894	2	8 Inch Wheel ASM

Height-of-Cut and Rear Wheel Assembly

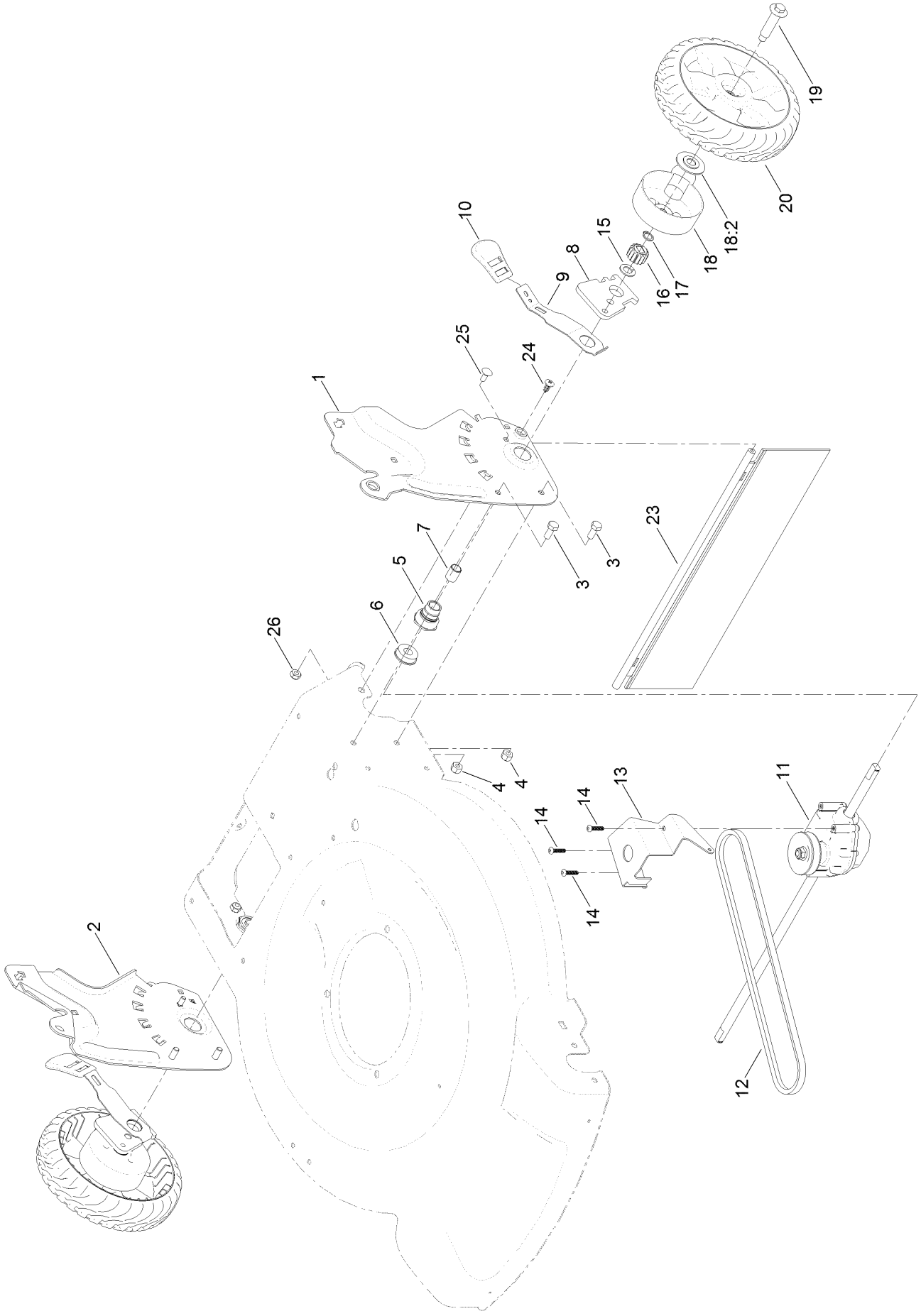

Height-of-Cut and Rear Wheel Assembly (continued)

Ref.	Part Number	Qty.	Description
1	131-9693-03	1	Plate-HOC, LH
2	131-9694-03	1	Plate-HOC, RH
3	322-3	4	Screw-HH
4	3296-29	4	Nut-Lock, NI
5	108-9779	2	Retainer-Bushing, HOC
6	104-8699	2	Bearing-Ball
7	108-9782	2	Bushing-Sleeve
8	132-4459	2	Arm-Pivot, Rear
9	108-9780	2	Arm-Spring
10	110-0549	2	Knob-HOC
11	121-9178	1	Transmission ASM
12	115-4669	1	Belt-V
13	114-7977-03	1	Bracket-Transmission
14	108-7476	3	Screw-Plastite
15	110-7191	2	Washer-Thrust
16	131-5399	2	Gear-Pinion, 15T
17	32151-61	2	Ring-Retaining
18	132-4480	2	Cover-Gear
18:2	614426	1	Washer-Stepped
19	614650	2	Bolt-Shoulder
20	119-3822	2	8 Inch Wheel Gear ASM
23	120-7012	1	Shield-Trailing
24	117-1092	2	Screw-PTH
25	3229-11	2	Screw-CARR
26	3296-16	2	Nut-Lock, NI

Handle Assembly

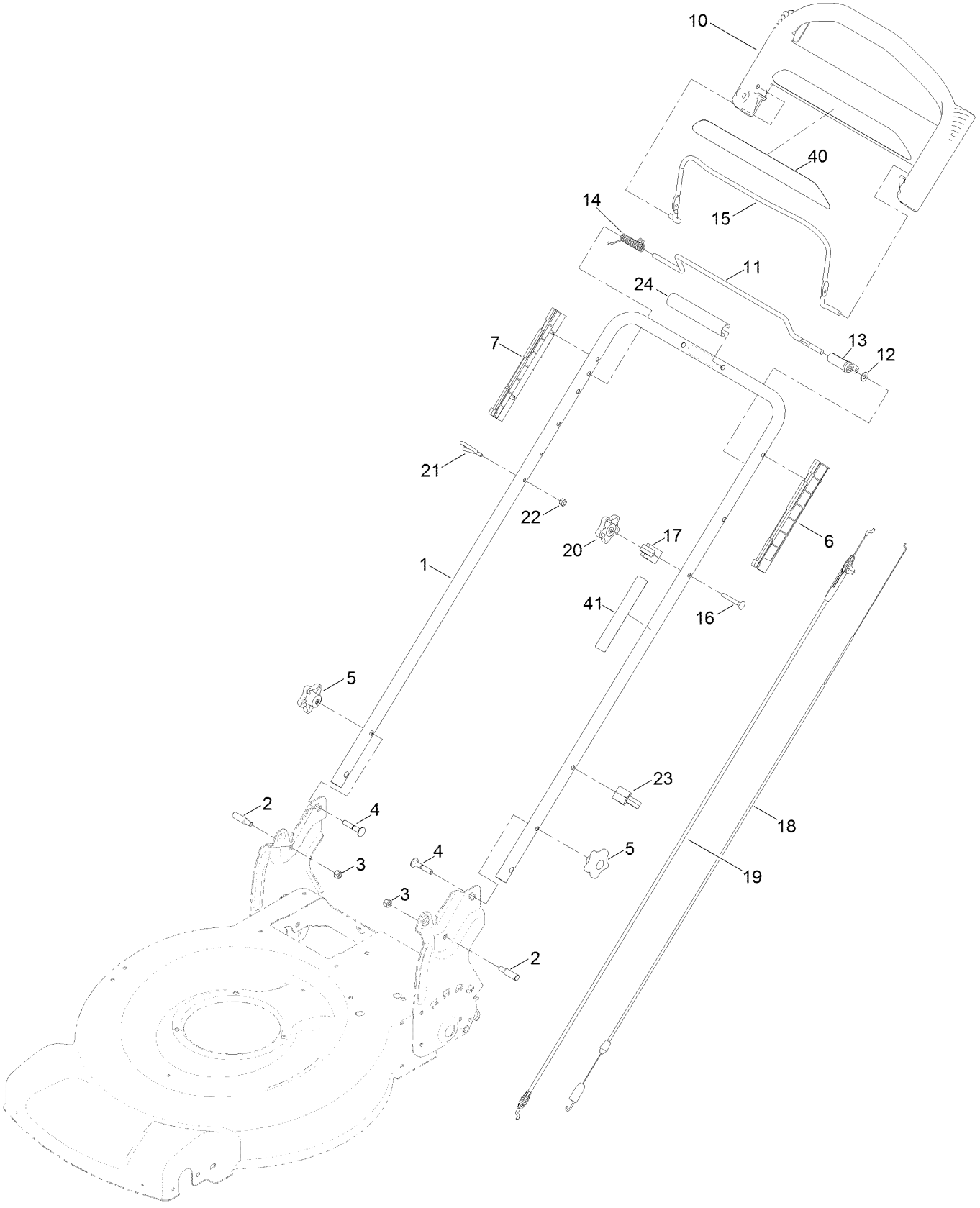

Handle Assembly (continued)

Ref.	Part Number	Qty.	Description
1	131-9695-05	1	Handle
2	131-4591	2	Bolt-Shoulder
3	3296-29	2	Nut-Lock, NI
4	131-9663	2	Screw-CARR
5	117-5976	2	Knob-Handle
6	105-6842	1	Guide-LH
7	105-6841	1	Guide-RH
10	104-8678	1	Handle-Control
11	99-1588	1	Bar-Control, Traction
12	3256-23	1	Washer-Plain
13	99-1589	1	Lever-Traction
14	121-9118	1	Spring-Torsion
15	131-0880-03	1	Bail-Brake
16	95-4453	1	Screw
17	136-5864	1	Anchor-Cable
18	115-8435	1	Cable-Traction
19	115-8437	1	Cable-Brake
20	131-0897	1	Knob-Handle, Locking
21	86-9671	1	Guide-Rope
22	3296-73	1	Nut-Lock, NI
23	114-7988	1	Guide-Cable
24	131-4551	1	Handle-Cover
40	117-1019	1	Decal
41	132-4470	1	Decal-Traction, Adjust

Attachments and Accessories

For 20332 22in Recycler Lawn Mower

Product Name	Model/Part
Fuel Stabilizer .05 oz	130-2393
Briggs Maint Kit	130-8148
Traction Assist Handle Kit	131-4590
Lawn Striping Kit with 22in Roller	20601
Replacement Drive Belt Kit, 22-inch 2009 and After Rear-Wheel Drive Lawn Mower	38991
Lawnmower Cover	490-7462
8in Gear Wheel ASM	59502
8in Gear Wheel ASM RWD	59503
22 Inch Atomic Blade	59534P

Notes:

Notes:

Notes:



Count on it.