Form No. 3381-193 Rev B

TORO®

Count on it.

Parts Catalog

22in Recycler®

Lawn Mower

Model No. 20334—Serial No. 314000001 and Up

Register at www.Toro.com.
Original Instructions (EN)

3381-193 B

Ordering Replacement Parts

To order replacement parts, please supply the part number, the quantity, and the description of each part desired.

Understanding Reference Numbers

Each identified part in an illustration has a reference number. The reference number for a part also appears in the parts list, along with other information about the part.

This catalog uses two special reference number formats, one to indicate parts in a service assembly and another to indicate the quantity of a given part in an illustration.

Service Assembly Reference Numbers

Parts in service assemblies have reference numbers in the form a:b. The a represents the reference number of the entire service assembly and the b represents a sequential number unique to each part within the service assembly.

For example, a wheel assembly might be identified by reference number 6, the tire by 6:1, the valve by 6:2, and the wheel by 6:3. When you order the assembly identified by reference number 6, you receive all parts identified by reference numbers 6:1,6:2, and 6:3. However, you may also order any part individually. Reference numbers of this type appear in illustration and in parts lists.

Reference Numbers Indicating Quantity

In an illustration, if a reference number indicates more than one part, the reference number has the form nX y. The n represents the quantity of the part, the X is the multiplication symbol, and the y represents the reference number.

For example, in an illustration, the reference number 2X 37 means that two of the parts identified by reference number 37 are indicated.

Contents

Deck, Side Chute and Rear Door Assembly 4
Rear Bag Assembly 6
Engine and Blade Assembly 8
Front Wheel and Height-of-Cut Assembly 10
Transmission and Rear Wheel Drive Assembly 12
Handle Assembly 14
Electical Assembly 16
Attachments and Accessories 18

© 2017—The Toro® Company
8111 Lyndale Avenue South
Bloomington, MN 55420

Contact us at www.Toro.com.
Printed in the USA.
All Rights Reserved

Deck, Side Chute and Rear Door Assembly

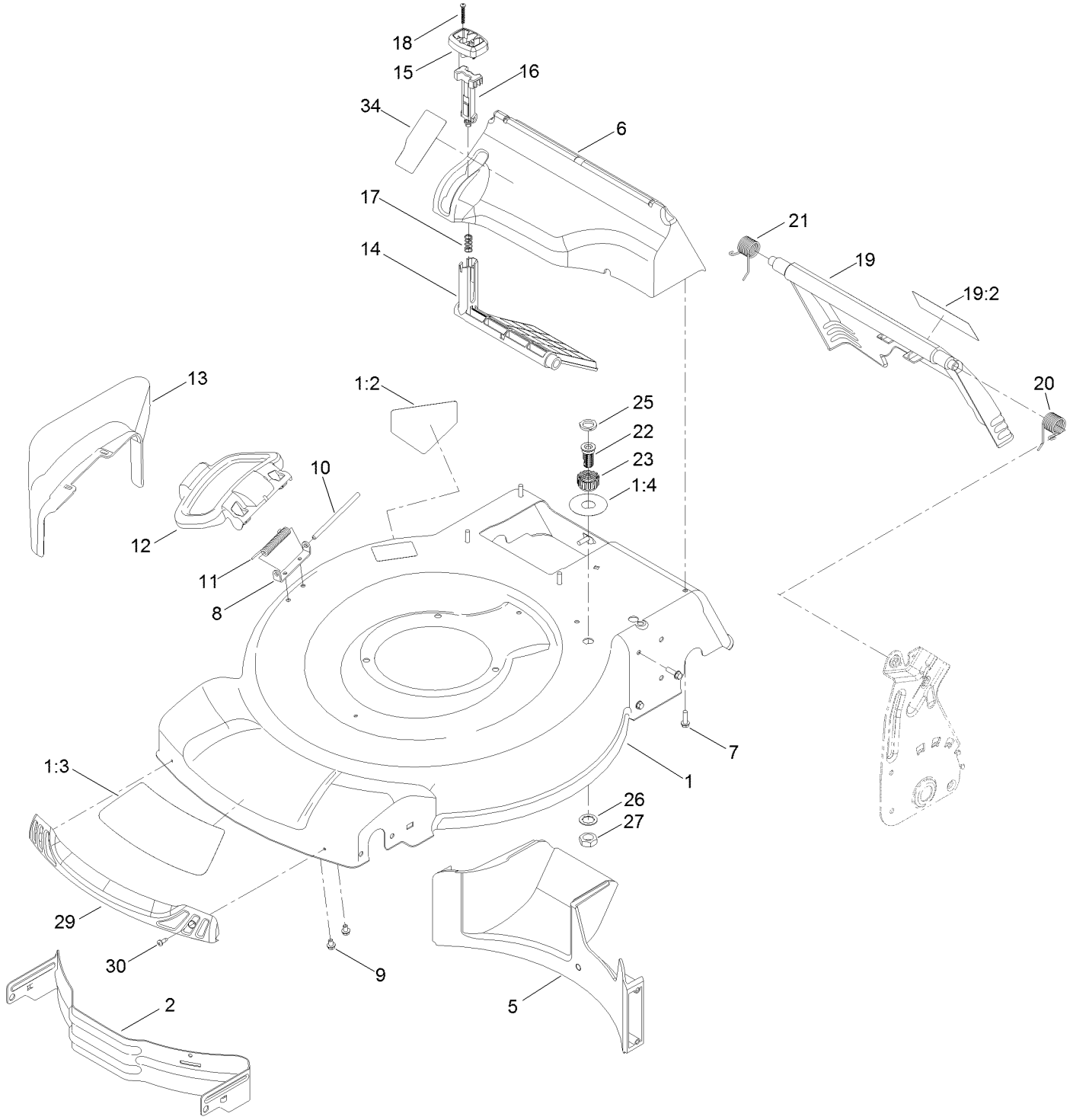

Deck, Side Chute and Rear Door Assembly (continued)

Ref.	Part Number	Qty.	Description
1	130-2389	1	Housing ASM
1:2	94-8072	1	Decal-Danger
1:3	115-4676	1	Decal-Recycler
1:4	112-8867	1	Decal-Port, Washout
2	114-7963-01	1	Baffle-Front
5	114-7961	1	Baffle-Rear
6	114-7957	1	Chute-Recycle
7	46-8091	9	Screw-HWH
8	112-6416	1	Bracket-Cover
9	99-8445	2	Screw-HWH
10	99-5291	1	Rod-Cover
11	99-5293	1	Spring-Torsion
12	115-8449	1	Deflector-Side
13	115-8447	1	Chute-Discharge, Side
14	114-7960	1	Deflector-Recycle
15	114-7958	1	Knob-Recycle
16	114-7959	1	Latch-Recycle
17	117-1031	1	Spring-Compression
18	32104-120	2	Screw-PPH
19	121-5776	1	Rear Door ASM
19:2	114-7982	1	Decal-Warning
20	115-2859	1	Spring-Torsion
21	114-7924	1	Spring-Torsion
22	112-6400	1	Port-Washout
23	112-6401	1	Coupling-Hose, Washout Port
25	112-6438	1	Washer-Seal, Washout Port
26	3254-5	1	Washer-Tooth, Internal
27	3218-6	1	Nut-Jam
29	114-7987	1	Bumper
30	105-6849	2	Screw-Forming, Thread
34	125-5026	1	Decal

Rear Bag Assembly

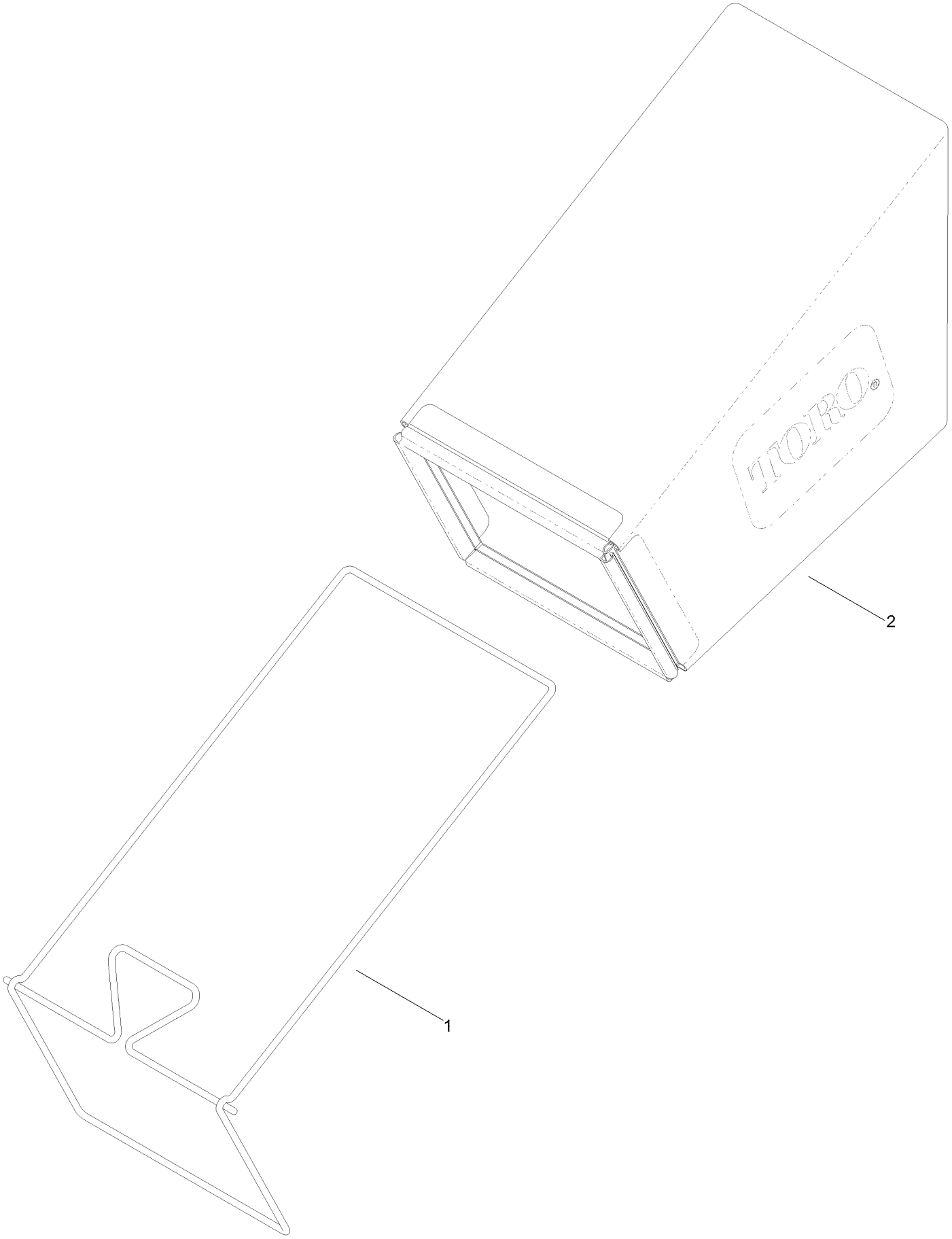

Rear Bag Assembly (continued)

Ref.	*Part Number*	*Qty.*	*Description*
1	114-2679-03	1	Frame-Bag
2	115-4673	1	Grass Bag ASM

Engine and Blade Assembly

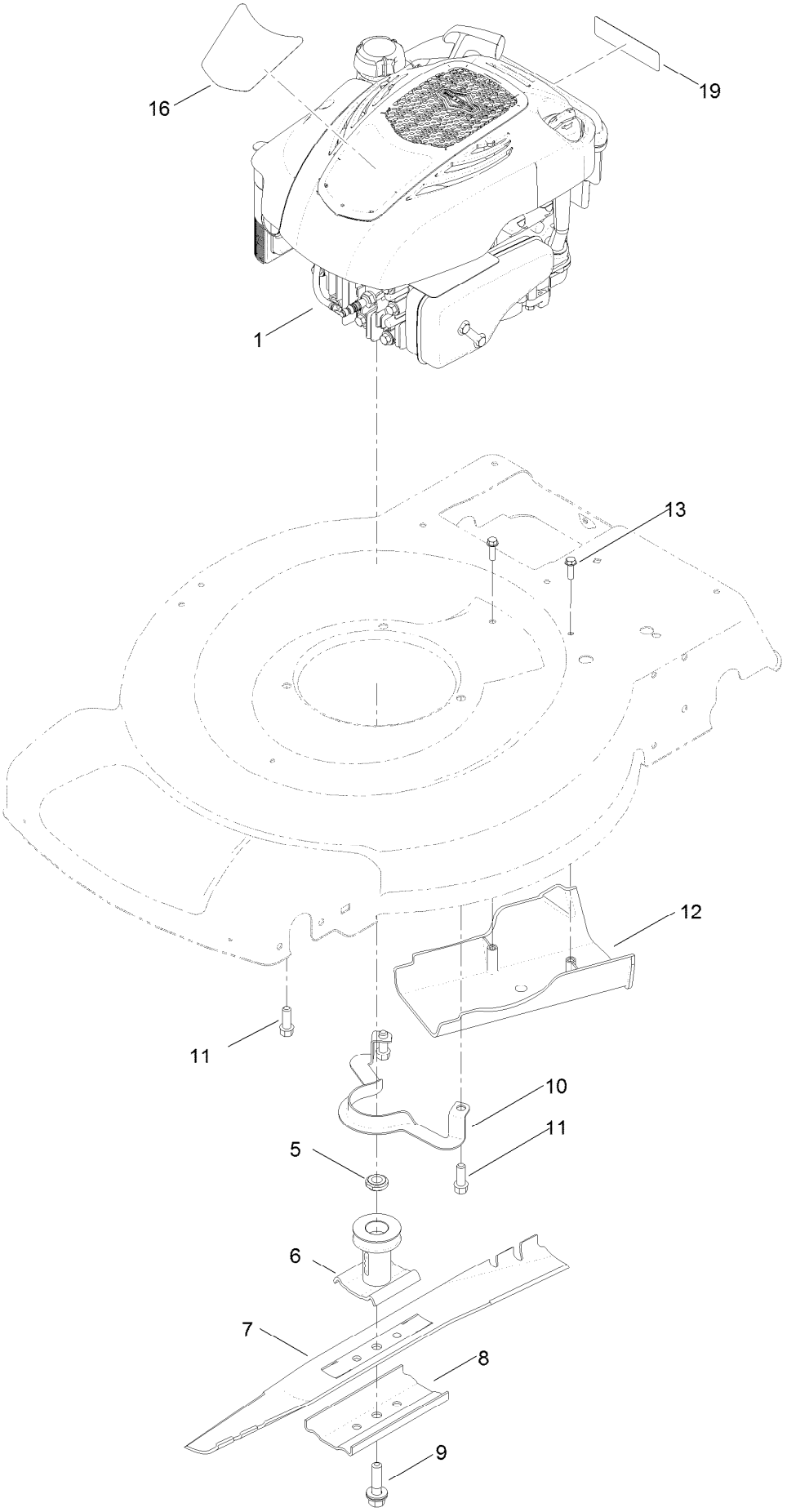

Engine and Blade Assembly (continued)

Ref.	Part Number	Qty.	Description
1		1	Engine-Briggs, 128M05-0026-F1 ●■
5	106-3999	1	Spacer-Driver
6	106-3987	1	Driver-Blade
7	108-9764-03	1	Blade-22 Inch
8	108-3766-03	1	Support-Blade
9	125-2466	1	Bolt-Blade
10	105-3030-03	1	Guide-Belt
11	95-1726	3	Screw-Taptite
12	114-7937	1	Cover-Belt
13	46-8091	2	Screw-HWH
16	121-2371	1	Decal-Shroud
19	117-2718	1	Decal-Arrester, Spark

● Not serviced separately

■ Obtain parts from www.briggsandstratton.com

Front Wheel and Height-of-Cut Assembly

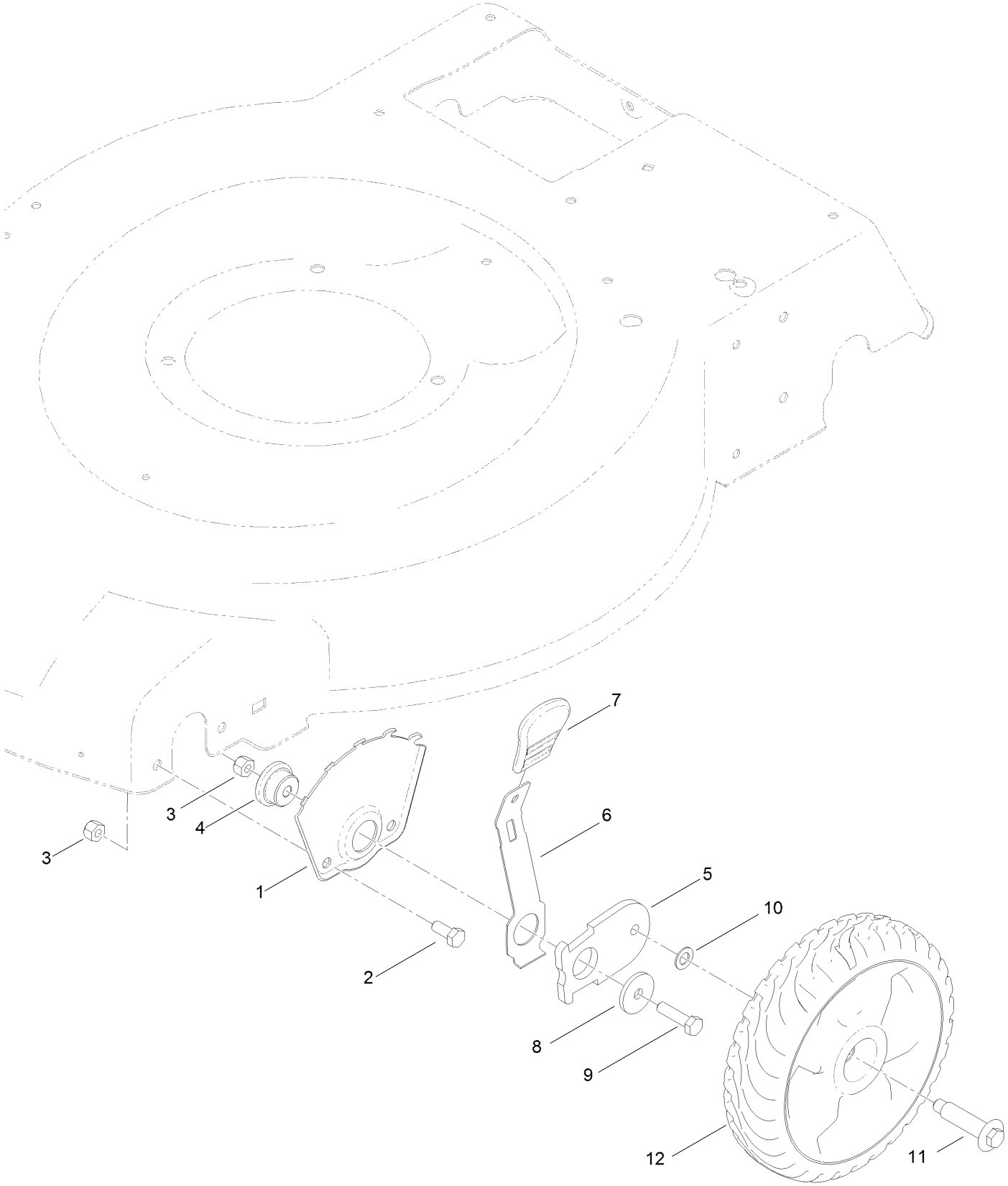

Front Wheel and Height-of-Cut Assembly (continued)

Ref.	Part Number	Qty.	Description
1	115-1956-03	2	Plate-HOC, Front
2	322-3	4	Screw-HH
3	3296-29	6	Nut-Lock, NI
4	105-1818	2	Bushing-Mount, HOC
5	105-1807	2	Arm-Pivot, Front
6	105-1809	2	Arm-Spring
7	110-0549	2	Knob-HOC
8	105-3048	2	Washer-Flat
9	322-6	2	Screw-HH
10	40-1940	2	Washer
11	614650	2	Bolt-Shoulder
12	115-2894	2	8 Inch Wheel ASM

Transmission and Rear Wheel Drive Assembly

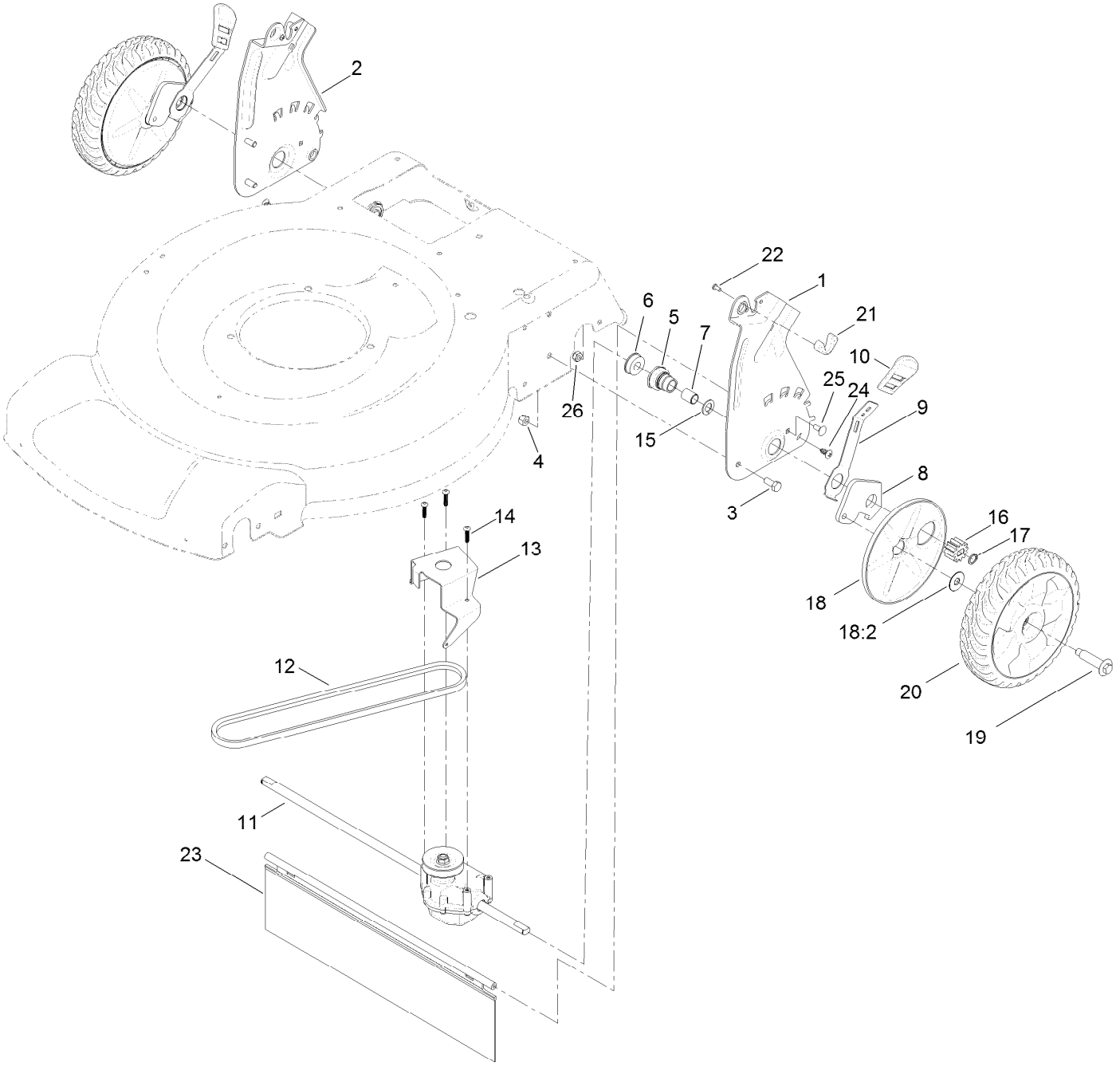

Transmission and Rear Wheel Drive Assembly (continued)

Ref.	Part Number	Qty.	Description
1	127-6877-03	1	Plate-Rear, LH (HOC)
2	127-6878-03	1	Plate-Rear, RH (HOC)
3	322-3	4	Screw-HH
4	3296-29	4	Nut-Lock, NI
5	108-9779	2	Retainer-Bushing, HOC
6	104-8699	2	Bearing-Ball
7	108-9782	2	Bushing-Sleeve
8	108-9781	2	Arm-Pivot, Rear
9	108-9780	2	Arm-Spring
10	110-0549	2	Knob-HOC
11	121-9178	1	Transmission ASM
12	115-4669	1	Belt-V
13	114-7977-03	1	Bracket-Transmission
14	108-7476	3	Screw-Plastite
15	110-7191	2	Washer-Thrust
16	110-9417	2	Gear-Pinion, 15T
17	32151-61	2	Ring-Retaining
18	110-1792	2	Wheel Cover ASM
18:2	614426	1	Washer-Stepped
19	614650	2	Bolt-Shoulder
20	119-3822	2	8 Inch Wheel Gear ASM
21	115-8406	2	Anchor-Bag
22	105-9437	2	Screw-PPH
23	120-7012	1	Shield-Trailing
24	117-1092	2	Screw-PTH
25	3229-11	2	Screw-CARR
26	3296-16	2	Nut-Lock, NI

Handle Assembly

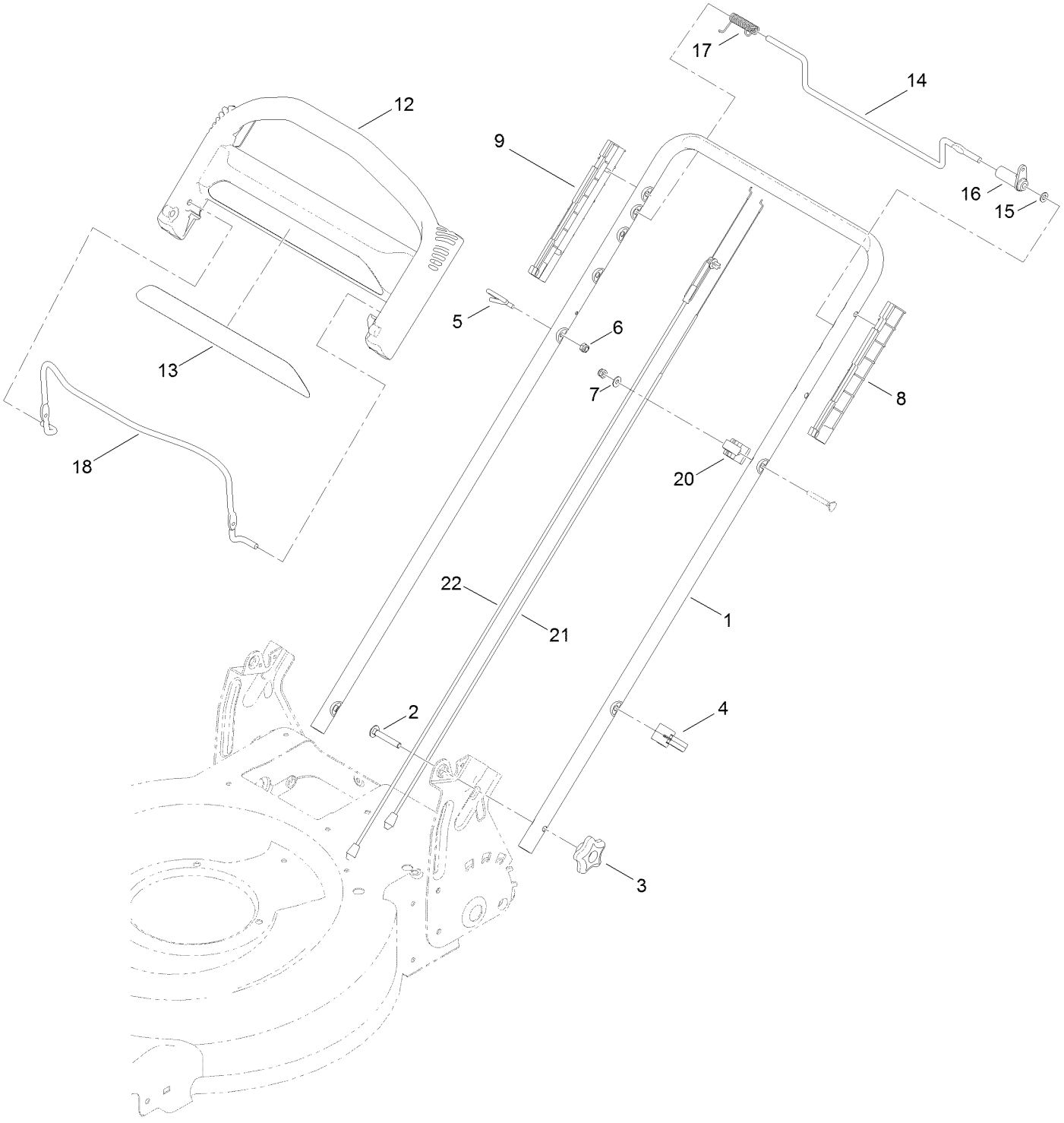

Handle Assembly (continued)

Ref.	Part Number	Qty.	Description
1	119-3810-05	1	Handle
2	3230-6	2	Screw-CARR
3	117-5976	2	Knob-Handle
4	114-7988	1	Guide-Cable
5	86-9671	1	Guide-Rope
6	3296-73	2	Nut-Lock, NI
7	3256-1	1	Washer-Flat
8	105-6842	1	Guide-LH
9	105-6841	1	Guide-RH
12	104-8678	1	Handle-Control
13	117-1019	1	Decal
14	99-1588	1	Bar-Control, Traction
15	3256-23	1	Washer-Plain
16	99-1589	1	Lever-Traction
17	121-9118	1	Spring-Torsion
18	104-8679-03	1	Bail-Brake
20	99-5239	1	Anchor-Cable
21	115-8435	1	Cable-Traction
22	115-8437	1	Cable-Brake

Electical Assembly

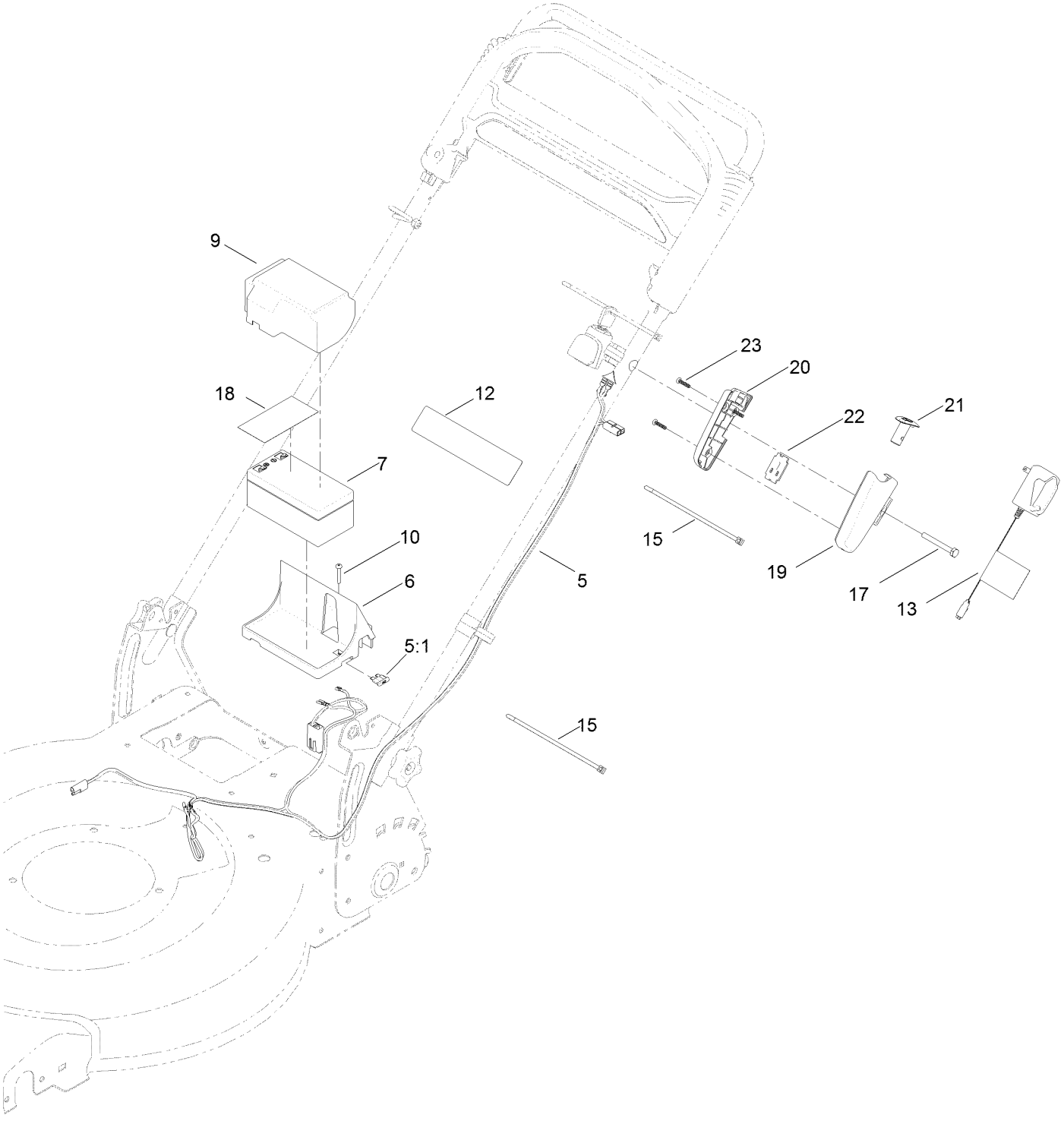

Electical Assembly (continued)

Ref.	Part Number	Qty.	Description
5	125-5023	1	Harness-Wire
5:1	99-6124	1	Fuse-40 Amp
6	114-7936	1	Tray-Battery
7	106-8397	1	Battery-Wet
9	120-3329	1	Cover-Battery
10	32144-97	1	Screw-PPH, Plastite
12	104-7953	1	Decal-Warning
13	114-1588	1	Charger-Battery
15	614249	3	Tie-Cable
17	321-50	1	Screw-HH
18	112-8763	1	Decal-Terminal, Battery
19	125-2468	1	Housing-Switch, LH
20	125-2469	1	Housing-Switch, RH
21	125-2470	1	Button-Switch
22	121-9173	1	Switch-Push Button
23	94-4496	3	Screw-PPH

Attachments and Accessories

For 20334 22in Recycler Lawn Mower

Product Name	Model/Part
Traction Assist Handle Kit	108-8120
Loose Parts Kit	117-4134
Toro WPM Maint Kit	20234
Replacement Bag	59310
Replacement Frame and Bag Kit	59312
22 Inch Atomic Blade	59534P

Notes:



Count on it.