Form No. 3405-592 Rev B

TORO®

Count on it.

Parts Catalog

Super Recycler®

Lawn Mower

Model No. 20382—Serial No. 316000001 and Up

Register at www.Toro.com.
Original Instructions (EN)

3405-592 B

Ordering Replacement Parts

To order replacement parts, please supply the part number, the quantity, and the description of each part desired.

Understanding Reference Numbers

Each identified part in an illustration has a reference number. The reference number for a part also appears in the parts list, along with other information about the part.

This catalog uses two special reference number formats, one to indicate parts in a service assembly and another to indicate the quantity of a given part in an illustration.

Service Assembly Reference Numbers

Parts in service assemblies have reference numbers in the form a:b. The a represents the reference number of the entire service assembly and the b represents a sequential number unique to each part within the service assembly.

For example, a wheel assembly might be identified by reference number 6, the tire by 6:1, the valve by 6:2, and the wheel by 6:3. When you order the assembly identified by reference number 6, you receive all parts identified by reference numbers 6:1,6:2, and 6:3. However, you may also order any part individually. Reference numbers of this type appear in illustration and in parts lists.

Reference Numbers Indicating Quantity

In an illustration, if a reference number indicates more than one part, the reference number has the form nX y. The n represents the quantity of the part, the X is the multiplication symbol, and the y represents the reference number.

For example, in an illustration, the reference number 2X 37 means that two of the parts identified by reference number 37 are indicated.

Contents

Housing Assembly 4
Housing Assembly No. 115-2854 6
Rear Door and Mulch Plug Assembly 8
Bag Assembly 10
Engine and Blade Assembly 12
Front Wheel and Height-of-Cut Assembly 14
Rear Wheel and Height-of-Cut Assembly 16
Handle Assembly 18
Attachments and Accessories 20

© 2017—The Toro® Company
8111 Lyndale Avenue South
Bloomington, MN 55420

Contact us at www.Toro.com.
Printed in the USA.
All Rights Reserved

Housing Assembly

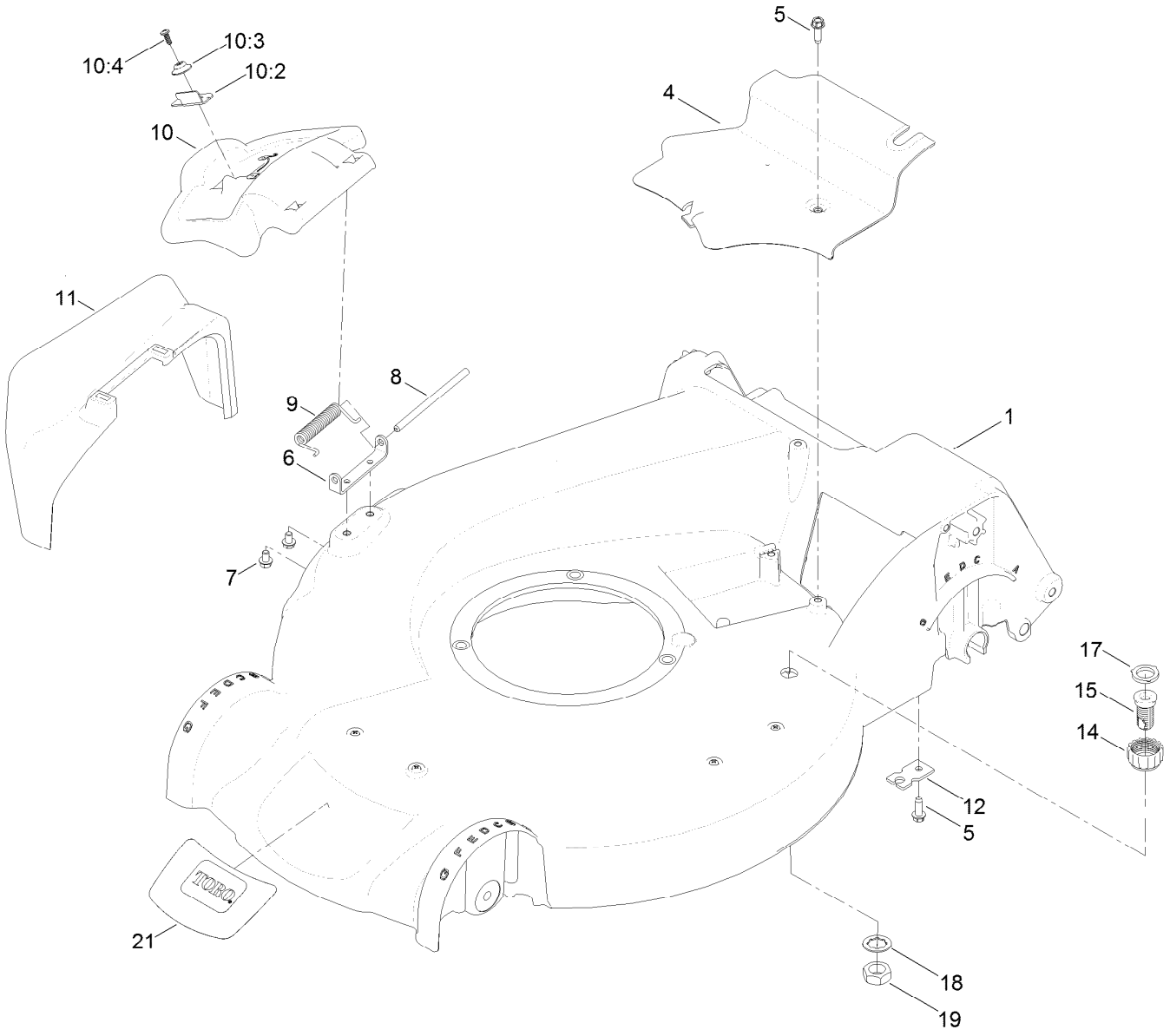

Housing Assembly (continued)

Ref.	Part Number	Qty.	Description
1	115-2854	1	Housing ASM
4	107-7494	1	Cover-Belt
5	49-2040	2	Screw-HWHTF
6	112-6416	1	Bracket-Cover
7	99-8445	2	Screw-HWH
8	99-5291	1	Rod-Cover
9	99-5293	1	Spring-Torsion
10	107-3717	1	Discharge Door ASM
10:2	107-0795	1	Latch-Door
10:3	107-7456	1	Cap-Door
10:4	107-7461	1	Screw-Plastite
11	108-3753	1	Chute-Discharge, Side
12	107-7497	1	Bracket-Cable, Traction
14	112-6401	1	Coupling-Hose, Washout Port
15	112-6400	1	Port-Washout
17	112-6438	1	Washer-Seal, Washout Port
18	3254-5	1	Washer-Tooth, Internal
19	3218-6	1	Nut-Jam
21	121-5758	1	Decal-Deck

Housing Assembly No. 115-2854

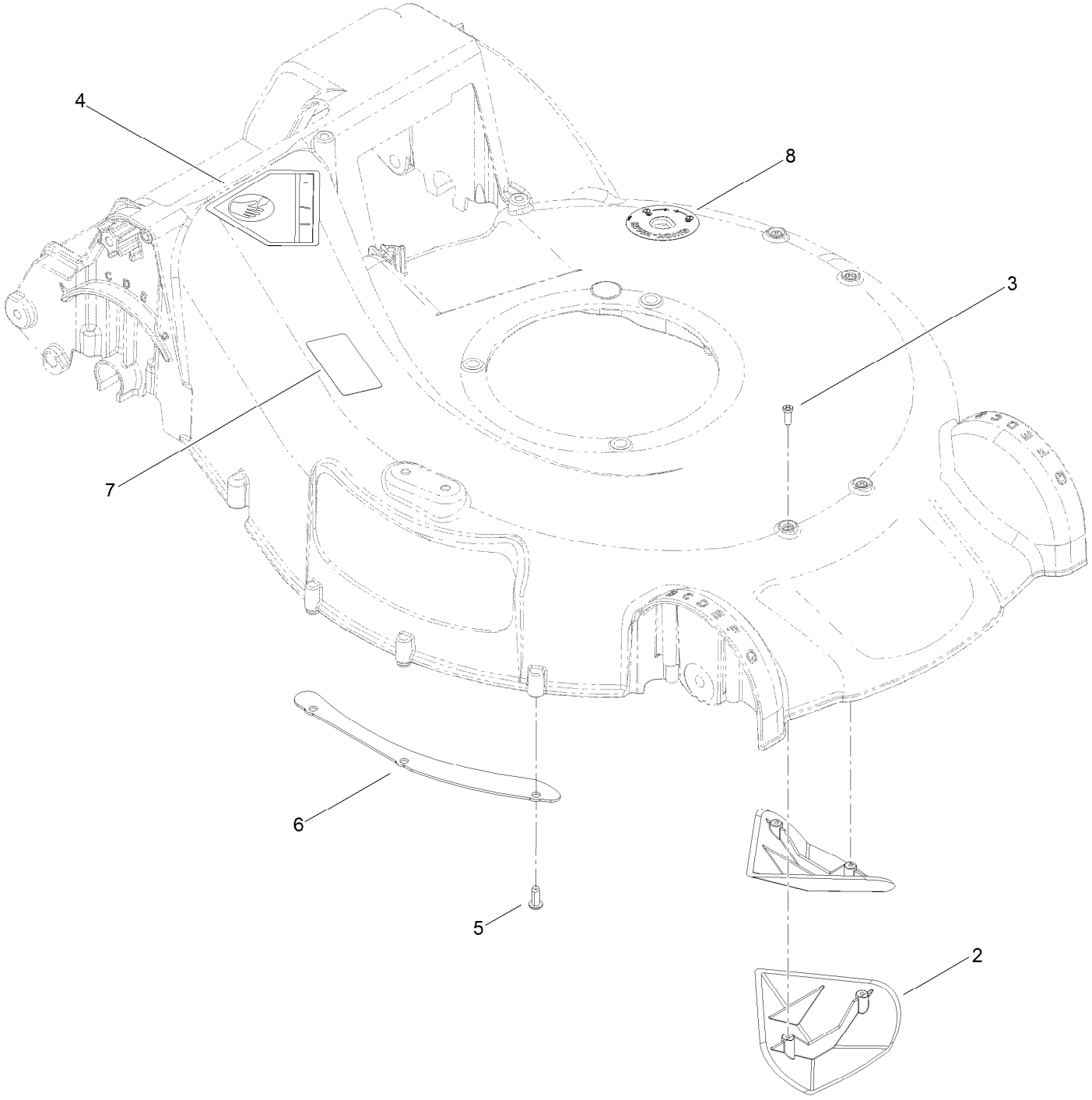

Housing Assembly No. 115-2854 (continued)

Ref.	Part Number	Qty.	Description
2	108-3798	2	Kicker-Housing
3	32144-111	4	Screw-PPH
4	94-8072	1	Decal-Danger
5	63-8590	3	Screw
6	105-1316-03	1	Sheet-Lip
7	125-5092	1	Decal-Placement, Foot
8	112-8867	1	Decal-Port, Washout

Rear Door and Mulch Plug Assembly

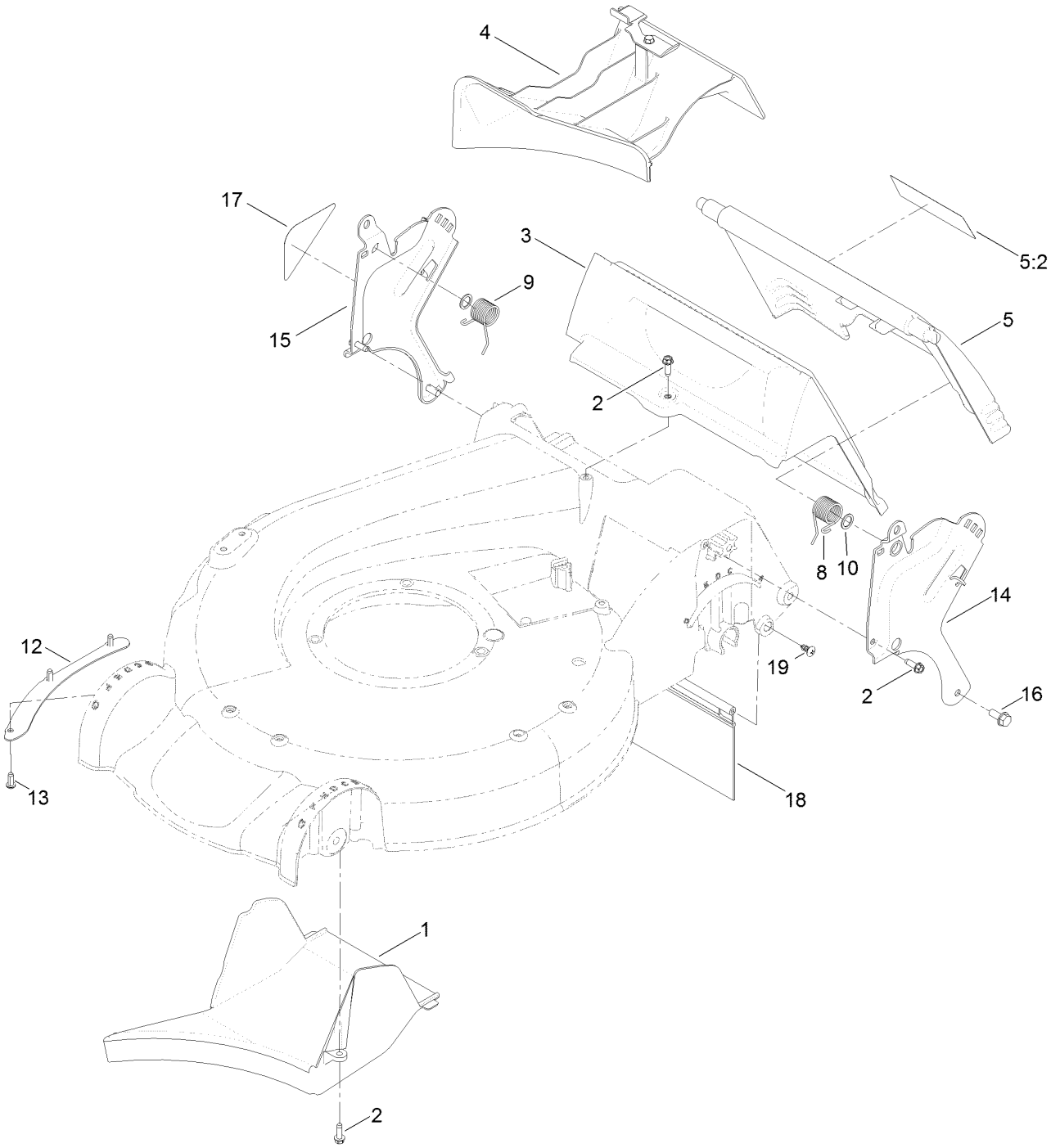

Rear Door and Mulch Plug Assembly (continued)

Ref.	Part Number	Qty.	Description
1	107-7495	1	Tunnel-Discharge
2	49-2040	5	Screw-HWHTF
3	114-2668	1	Chute
4	115-8413	1	Mulch Plug ASM
5	121-5776	1	Rear Door ASM
5:2	131-4514	1	Decal-Warning
8	115-2859	1	Spring-Torsion
9	114-7924	1	Spring-Torsion
10	94-8196	2	Washer-Nylon
12	105-1316-03	1	Sheet-Lip
13	63-8590	3	Screw
14	114-2671-03	1	Bracket-Handle, LH
15	114-2672-03	1	Bracket-Handle, RH
16	32144-11	2	Screw-HWHTF
17	115-2884	1	Decal-Instruction
18	120-7011	1	Shield-Trailing
19	117-1092	2	Screw-PTH

Bag Assembly

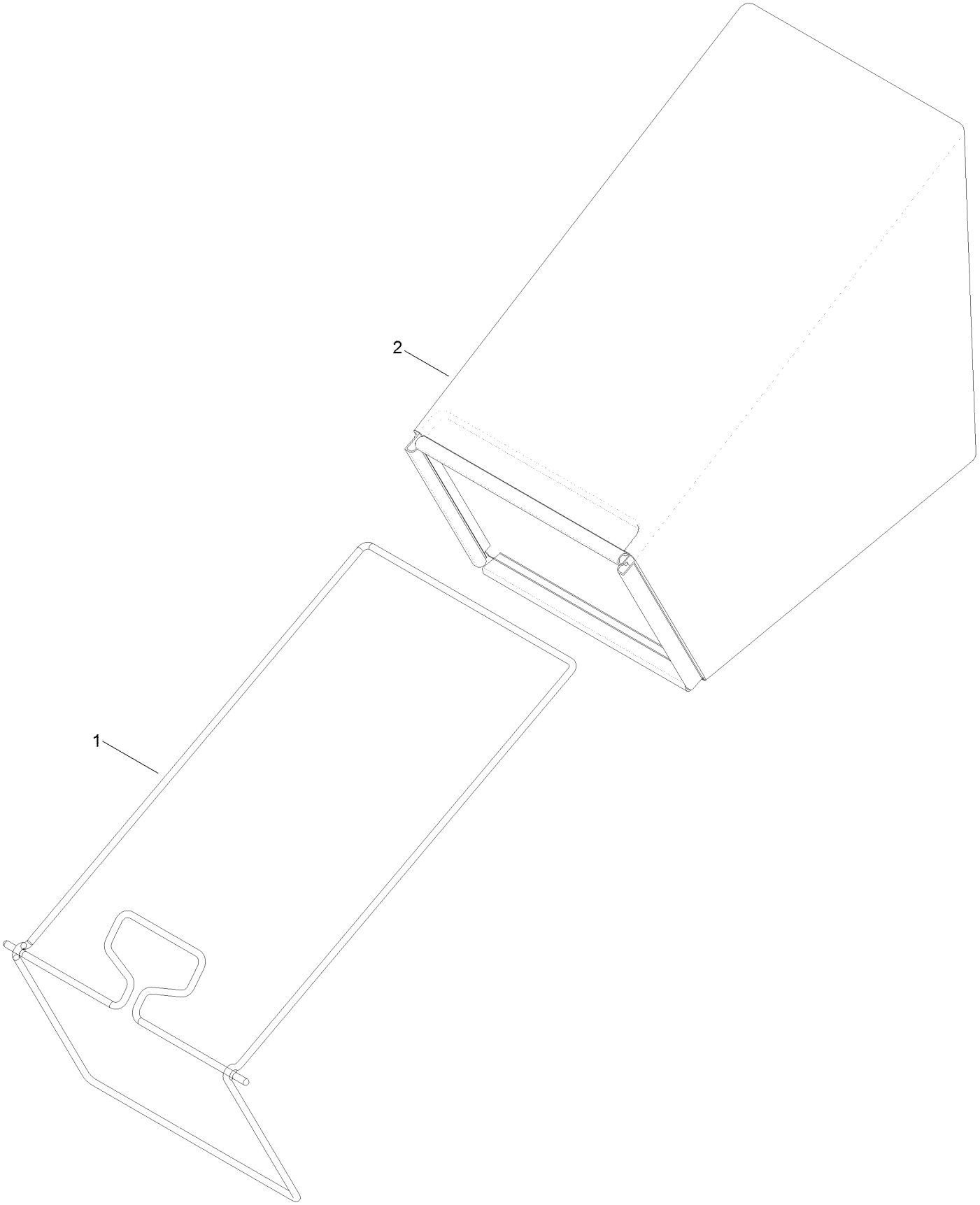

Bag Assembly (continued)

Ref.	*Part Number*	*Qty.*	*Description*
1	132-4503-03	1	Frame-Bag
2	114-2664	1	Grass Bag ASM

Engine and Blade Assembly

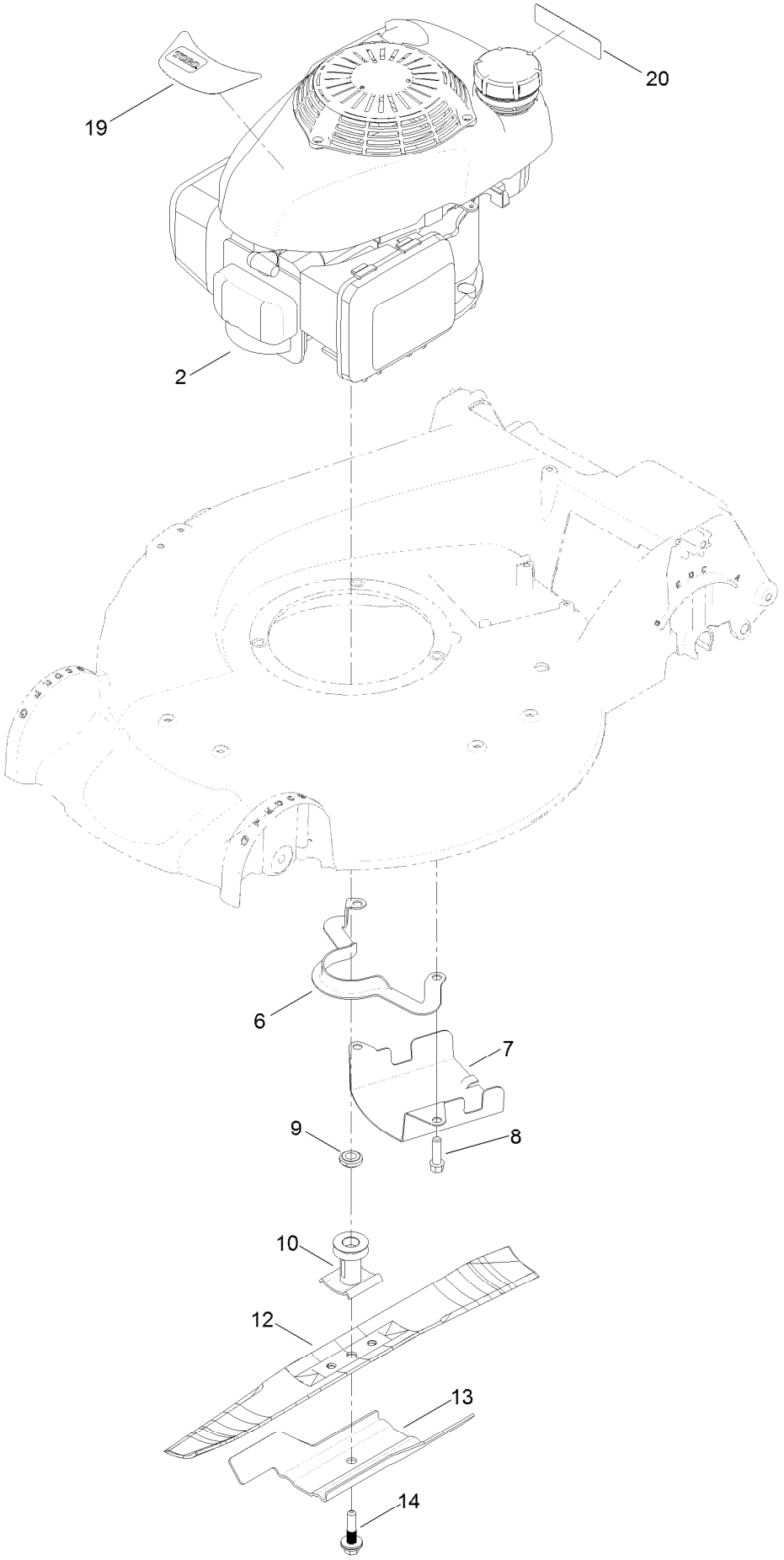

Engine and Blade Assembly (continued)

Ref.	Part Number	Qty.	Description
2		1	Engine-Honda, Gcv160La0 S3B ●■
6	108-8110-03	1	Guide-Belt
7	107-7489-03	1	Shield-Grass
8	95-1727	3	Screw-Taptite
9	106-3999	1	Spacer-Driver
10	114-2774	1	Driver-Blade
12	108-3762-03	1	Blade-Recycling
13	105-6848-03	1	Accelerator-Blade
14	117-5270	1	Bolt-Blade
19	131-0854	1	Decal-Shroud, Honda
20	117-2718	1	Decal-Arrester, Spark

● Not serviced separately

■ Obtain parts from www.honda-engines.com

Front Wheel and Height-of-Cut Assembly

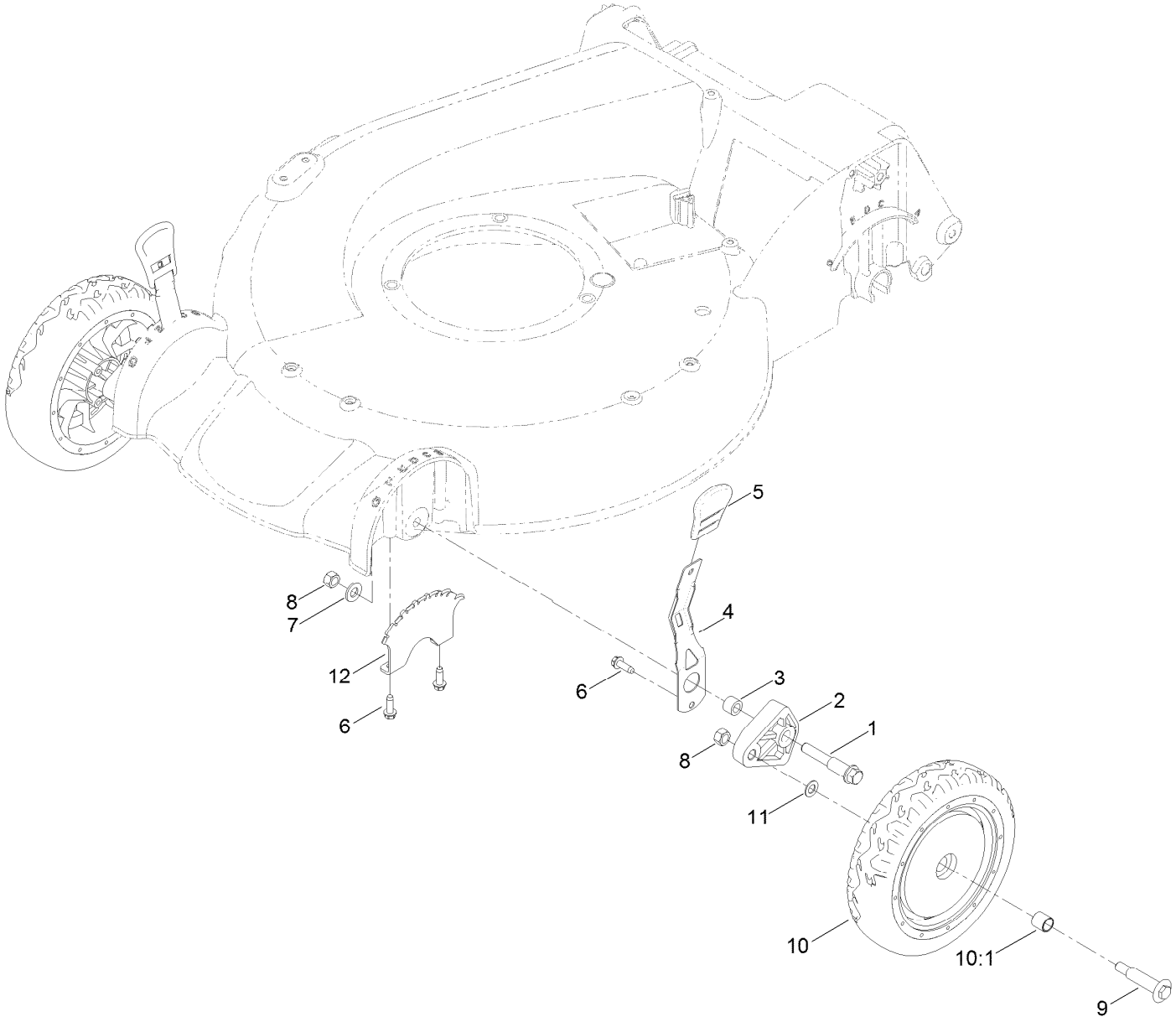

Front Wheel and Height-of-Cut Assembly (continued)

Ref.	Part Number	Qty.	Description
1	114-3467	2	Screw-Shoulder
2	107-7492	2	Arm-Pivot
3	52-2480	2	Spacer-Wheel
4	107-7491	2	Arm-Spring
5	110-0549	2	Knob-HOC
6	49-2040	6	Screw-HWHTF
7	3256-24	2	Washer-Flat
8	125-5069	4	Nut-Hex
9	92-1057	2	Bolt-Shoulder
10	107-3708	2	Wheel ASM
10:1	27-6250	2	Bushing
11	40-1940	2	Washer
12	107-7478	2	Plate-HOC

Rear Wheel and Height-of-Cut Assembly

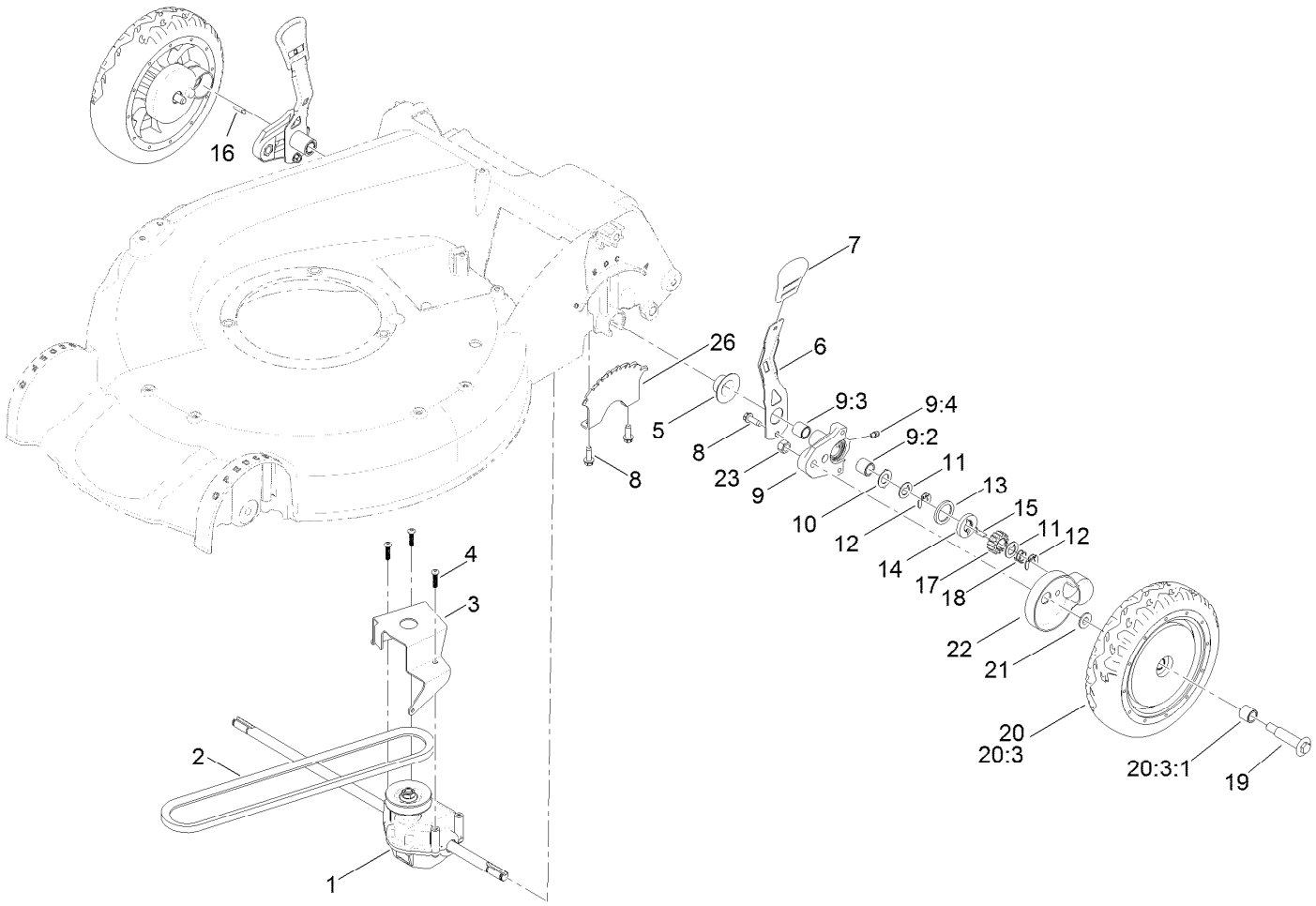

Rear Wheel and Height-of-Cut Assembly (continued)

Ref.	Part Number	Qty.	Description
1	121-9184	1	Transmission ASM
2	92-1043	1	V-Belt
3	114-7977-03	1	Bracket-Transmission
4	108-7476	3	Screw-Plastite
5	42-3520	2	Cap-End
6	107-7491	2	Arm-Spring
7	110-0549	2	Knob-HOC
8	49-2040	6	Screw-HWHTF
9	100-8774	2	Pivot Arm ASM
9:2	47-2900	1	Bushing
9:3	70-9760	1	Bushing
9:4	302-56	1	Fitting-Grease
10	65-4730	2	Washer-Arm, Pivot
11	65-4740	4	Washer-Thrust, Keyed
12	65-2720	4	Ring-Clip, Locking
13	65-4710	2	Ring-Friction
14	65-4760	2	Washer-Clutch
15	66-6050	1	Key-Rocking, LH
16	66-6040	1	Key-Rocking, RH
17	65-4750	2	Gear-Pinion
18	65-4720	2	Spring-Compression
19	92-1057	2	Bolt-Shoulder
20	107-3709	2	Wheel Gear ASM
20:3		1	Wheel ASM ●
20:3:1	27-6250	2	Bushing
21	74-1671	2	Spacer-Cover, Wheel
22	74-1660	2	Cover-Wheel
23	125-5069	2	Nut-Hex
26	107-7478	2	Plate-HOC

● Not serviced separately

Handle Assembly

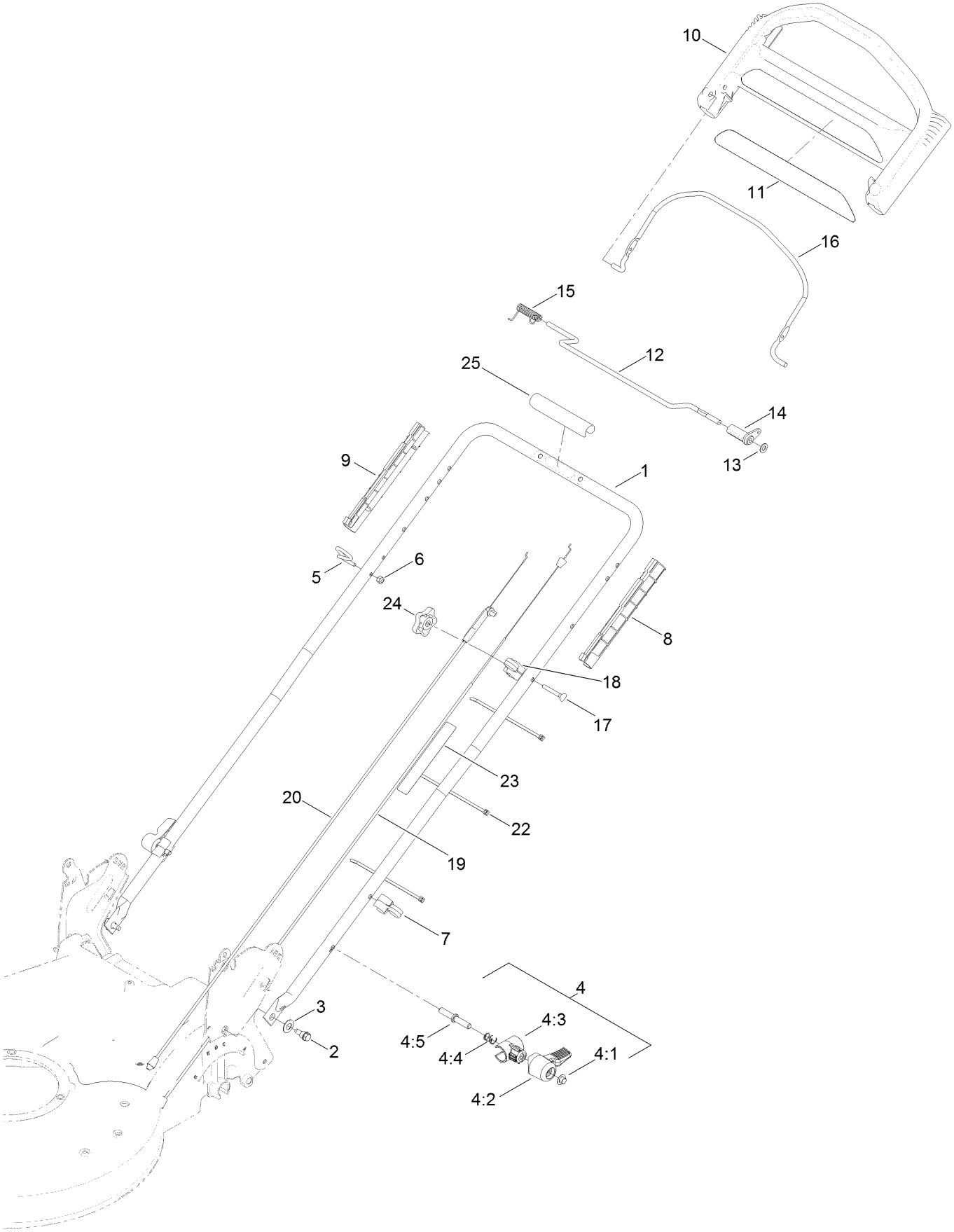

Handle Assembly (continued)

Ref.	Part Number	Qty.	Description
1	132-4460-05	1	Handle
2	115-1958	2	Bolt-Shoulder
3	112-9972	2	Washer-Spring, Conical
4	115-2860	2	Quick Release ASM
4:1	109-0917	1	Nut-Push
4:2	114-7995	1	Lever
4:3	114-7996	1	Anchor-Spring ●
4:4	115-2858	1	Spring-Compression
4:5	114-2675	1	Rod-Release
5	86-9671	1	Guide-Rope
6	3296-73	1	Nut-Lock, NI
7	114-7988	1	Guide-Cable
8	105-6842	1	Guide-LH
9	105-6841	1	Guide-RH
10	104-8678	1	Handle-Control
11	117-1019	1	Decal
12	99-1588	1	Bar-Control, Traction
13	3256-23	1	Washer-Plain
14	99-1589	1	Lever-Traction
15	121-9118	1	Spring-Torsion
16	131-0880-03	1	Bail-Brake
17	95-4453	1	Screw
18	99-5239	1	Anchor-Cable
19	108-8158	1	Cable-Traction
20	120-3921	1	Cable-Brake
22	614249	3	Tie-Cable
23	132-4470	1	Decal-Traction, Adjust
24	131-0897	1	Knob-Handle, Locking
25	131-4551	1	Handle-Cover

● Not illustrated

Attachments and Accessories

For 20382 Super Recycler Lawn Mower

Product Name	Model/Part
Bagging Blade	108-3759-03
WPM Maintenance Kit, 2014 and Newer	130-8134
Traction Assist Handle Kit	131-4590
Lawnmower Cover	490-7462

Notes:

Notes:

Notes:



Count on it.