Form No. 3375-457 Rev D

TORO®

Count on it.

Parts Catalog

22in Recycler®

Lawn Mower

Model No. 20374—Serial No. 313000001 and Up

Register at www.Toro.com.
Original Instructions (EN)

3375-457 D

Ordering Replacement Parts

To order replacement parts, please supply the part number, the quantity, and the description of each part desired.

Understanding Reference Numbers

Each identified part in an illustration has a reference number. The reference number for a part also appears in the parts list, along with other information about the part.

This catalog uses two special reference number formats, one to indicate parts in a service assembly and another to indicate the quantity of a given part in an illustration.

Service Assembly Reference Numbers

Parts in service assemblies have reference numbers in the form a:b. The a represents the reference number of the entire service assembly and the b represents a sequential number unique to each part within the service assembly.

For example, a wheel assembly might be identified by reference number 6, the tire by 6:1, the valve by 6:2, and the wheel by 6:3. When you order the assembly identified by reference number 6, you receive all parts identified by reference numbers 6:1,6:2, and 6:3. However, you may also order any part individually. Reference numbers of this type appear in illustration and in parts lists.

Reference Numbers Indicating Quantity

In an illustration, if a reference number indicates more than one part, the reference number has the form nX y. The n represents the quantity of the part, the X is the multiplication symbol, and the y represents the reference number.

For example, in an illustration, the reference number 2X 37 means that two of the parts identified by reference number 37 are indicated.

Contents

Deck, Side Chute and Rear Door Assembly 4
Rear Bag Assembly 5
Engine and Blade Assembly 6
Shroud, Flywheel and Fuel Tank Assembly 7
Dipstick, Brake and Governor Arm Assembly 8
Carburetor, Muffler, Air Cleaner and Valve Cover Assembly 9
Front Wheel and Height-of-Cut Assembly 10
Transmission and Rear Wheel Drive Assembly 11
Handle Assembly 12
Electrical Assembly 13
Attachments and Accessories 14

© 2017—The Toro® Company
8111 Lyndale Avenue South
Bloomington, MN 55420

Contact us at www.Toro.com.
Printed in the USA.
All Rights Reserved

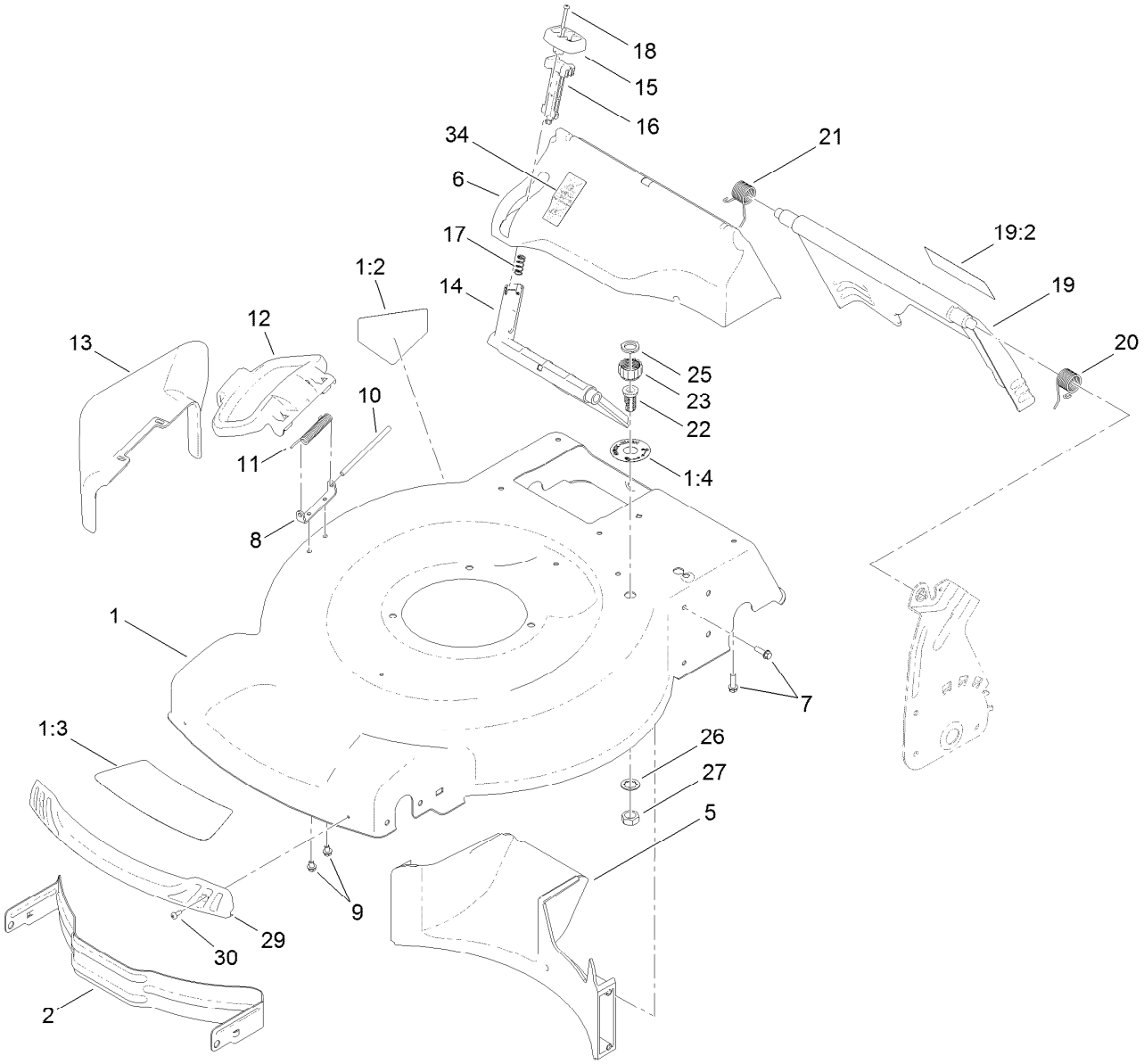

Deck, Side Chute and Rear Door Assembly

Ref.	Part Number	Qty.	Description
1	117-1084	1	Housing ASM
1:2	94-8072	1	Decal-Danger
1:3	115-4676	1	Decal-Recycler
1:4	112-8867	1	Decal-Port, Washout
2	114-7963-01	1	Baffle-Front
5	114-7961	1	Baffle-Rear
6	114-7957	1	Chute-Recycle
7	46-8091	9	Screw-HWH
8	112-6416	1	Bracket-Cover
9	99-8445	2	Screw-HWH
10	99-5291	1	Rod-Cover
11	99-5293	1	Spring-Torsion
12	115-8449	1	Deflector-Side
13	115-8447	1	Chute-Discharge, Side
14	114-7960	1	Deflector-Recycle
15	114-7958	1	Knob-Recycle

Ref.	Part Number	Qty.	Description
16	114-7959	1	Latch-Recycle
17	117-1031	1	Spring-Compression
18	32104-120	2	Screw-PPH
19	121-5776	1	Rear Door ASM
19:2	114-7982	1	Decal-Warning
20	115-2859	1	Spring-Torsion
21	114-7924	1	Spring-Torsion
22	112-6400	1	Port-Washout
23	112-6401	1	Coupling-Hose, Washout Port
25	112-6438	1	Washer-Seal, Washout Port
26	3254-5	1	Washer-Tooth, Internal
27	3218-6	1	Nut-Jam
29	114-7987	1	Bumper
30	105-6849	2	Screw-Forming, Thread
34	119-0305	1	Decal-Bag On Demand

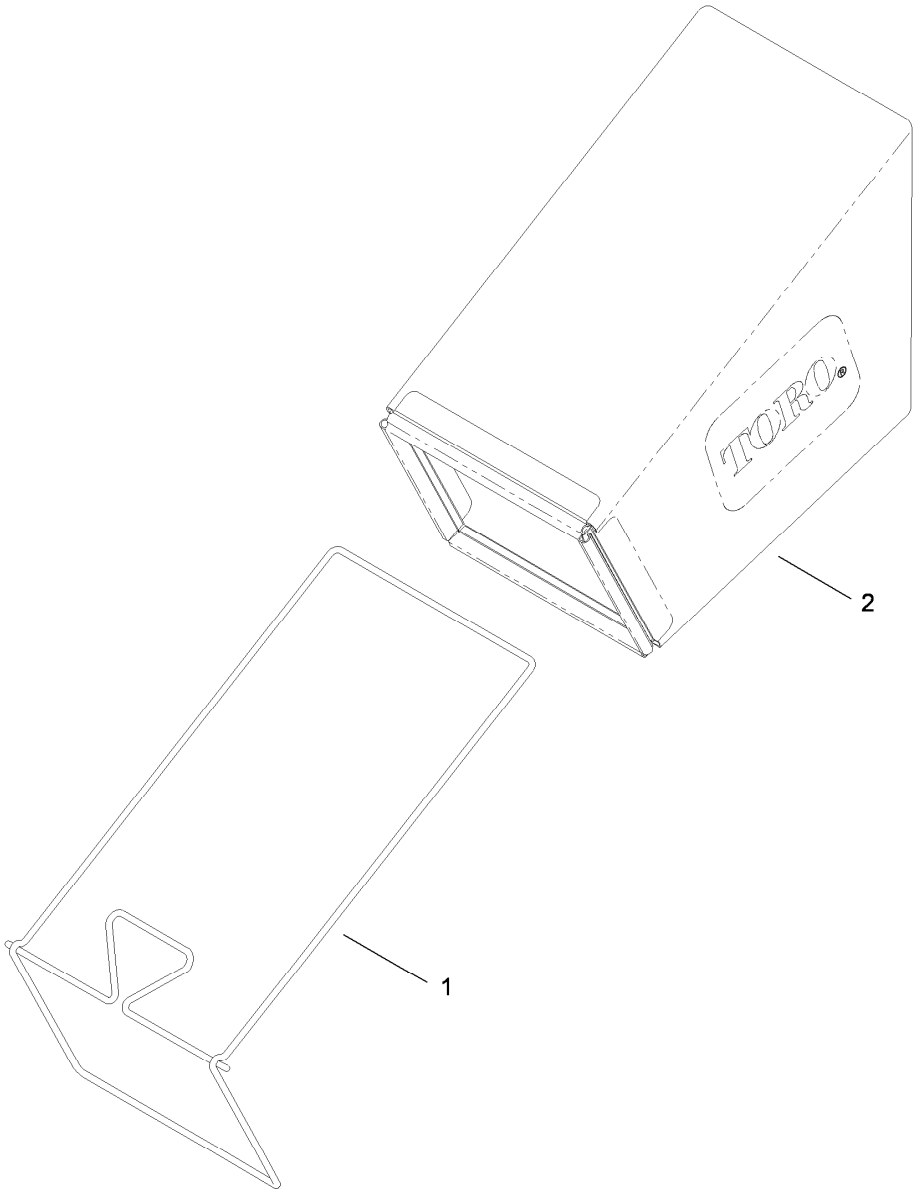

Rear Bag Assembly

Ref.	*Part Number*	*Qty.*	*Description*
1	114-2679-03	1	Frame-Bag
2	115-4673	1	Grass Bag ASM

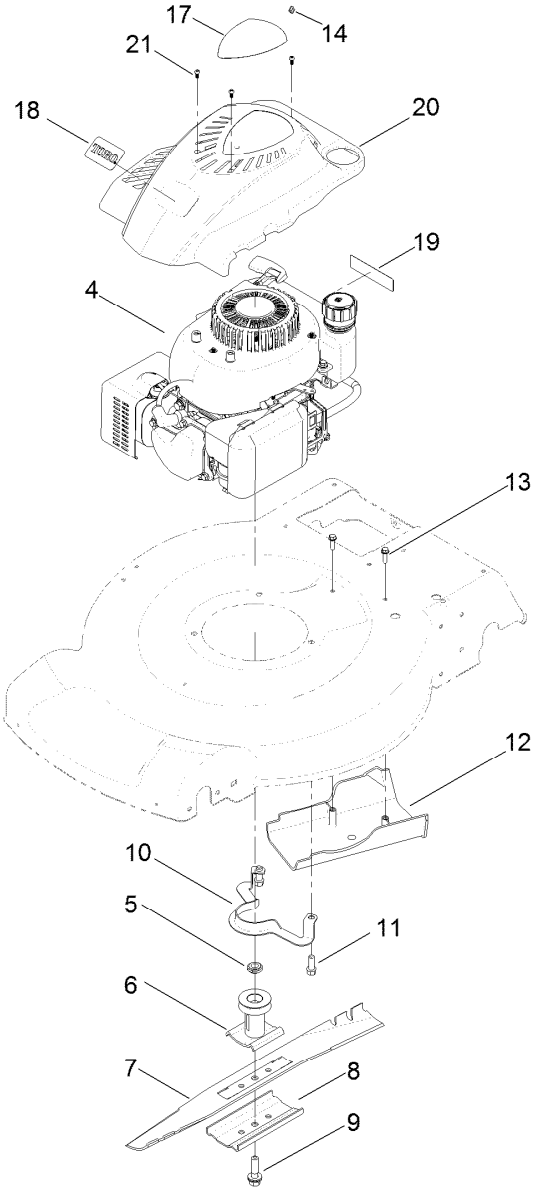

Engine and Blade Assembly

Ref.	Part Number	Qty.	Description
4	120-4413	1	Engine-1P65Fc
5	106-3999	1	Spacer-Driver
6	106-3987	1	Driver-Blade
7	108-9764-03	1	Blade-22 Inch
8	108-3766-03	1	Support-Blade
9	125-2466	1	Bolt-Blade
10	105-3030-03	1	Guide-Belt
11	95-1726	3	Screw-Taptite

Ref.	Part Number	Qty.	Description
12	114-7937	1	Cover-Belt
13	46-8091	2	Screw-HWH
14	92-1701	1	Stop-Rope
17	125-5036	1	Decal-Shroud
18	125-2505	1	Decal
19	117-2718	1	Decal-Arrester, Spark
20	121-0443	1	Shroud
21	121-4155	3	Screw-PPH

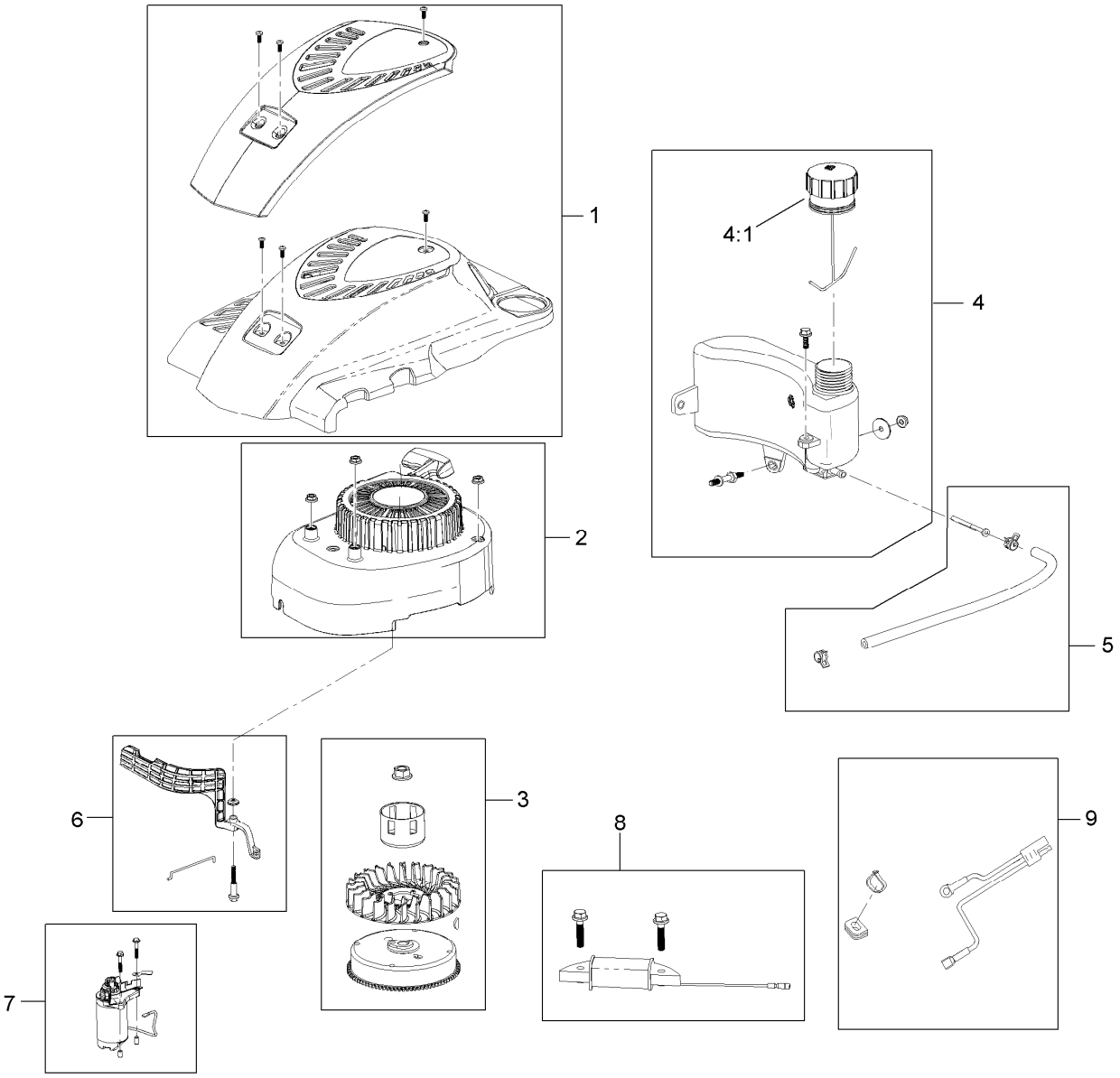

Shroud, Flywheel and Fuel Tank Assembly

Ref.	*Part Number*	*Qty.*	*Description*
1	119-1990	1	Shroud ASM
2	121-4160	1	Recoil And Blower Shroud Kit
3	121-0391	1	Flywheel And Fan Kit
4	121-4162	1	Fuel Tank Kit
4:1	121-4163	1	Cap-Fuel
5	121-4167	1	Fuel Line Kit
6	121-4168	1	Air Vane Kit
7	121-0393	1	Starter Kit
8	121-0392	1	Alternator Kit
9	121-0395	1	Wire Harness Kit

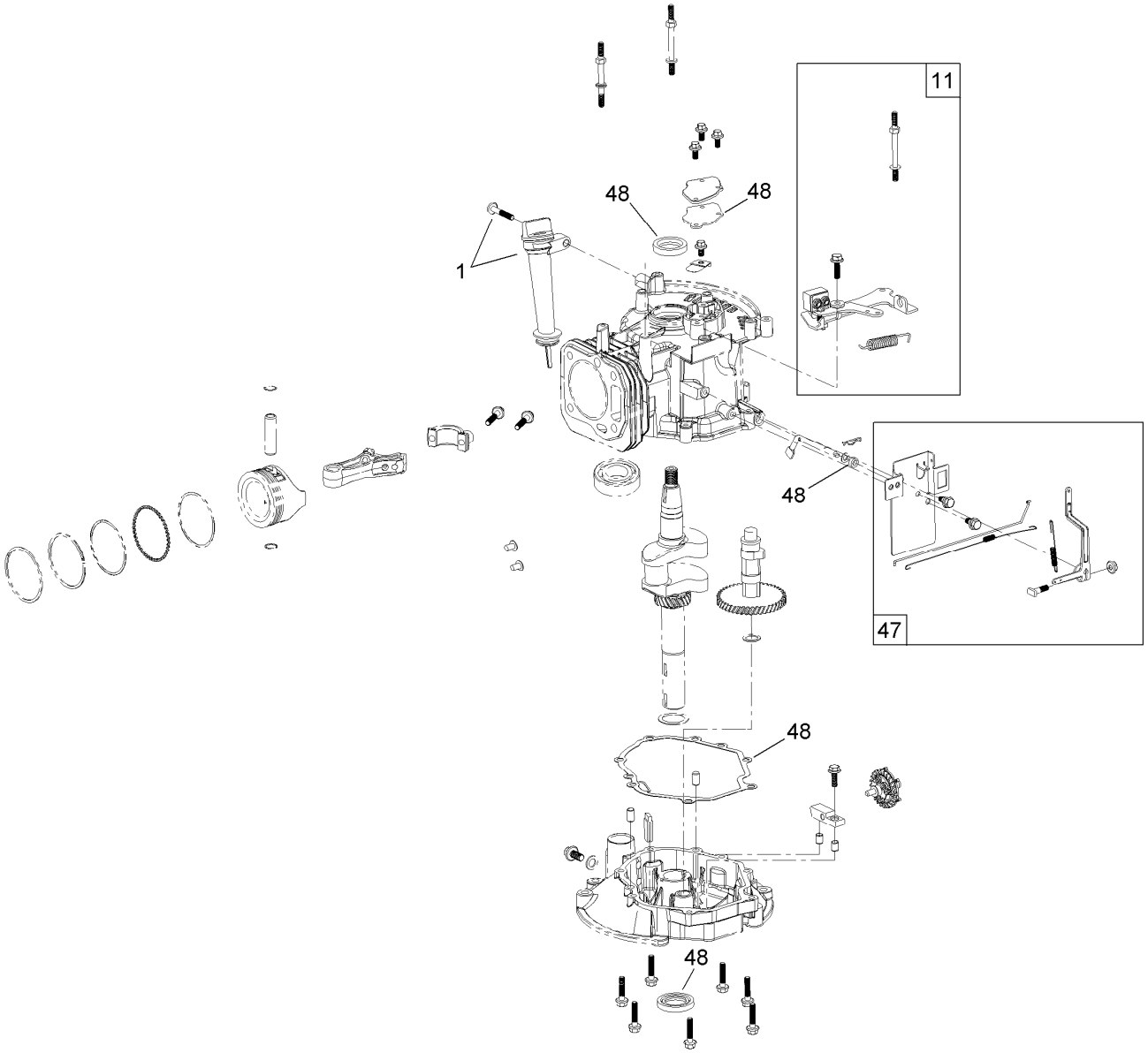

Dipstick, Brake and Governor Arm Assembly

Ref.	*Part Number*	*Qty.*	*Description*
1	119-1903	1	Dipstick And Fill Tube Kit
11	121-4205	1	Brake Kit
47	119-1968	1	Governor Arm Kit
48	127-9144	1	Seal And Gasket Kit

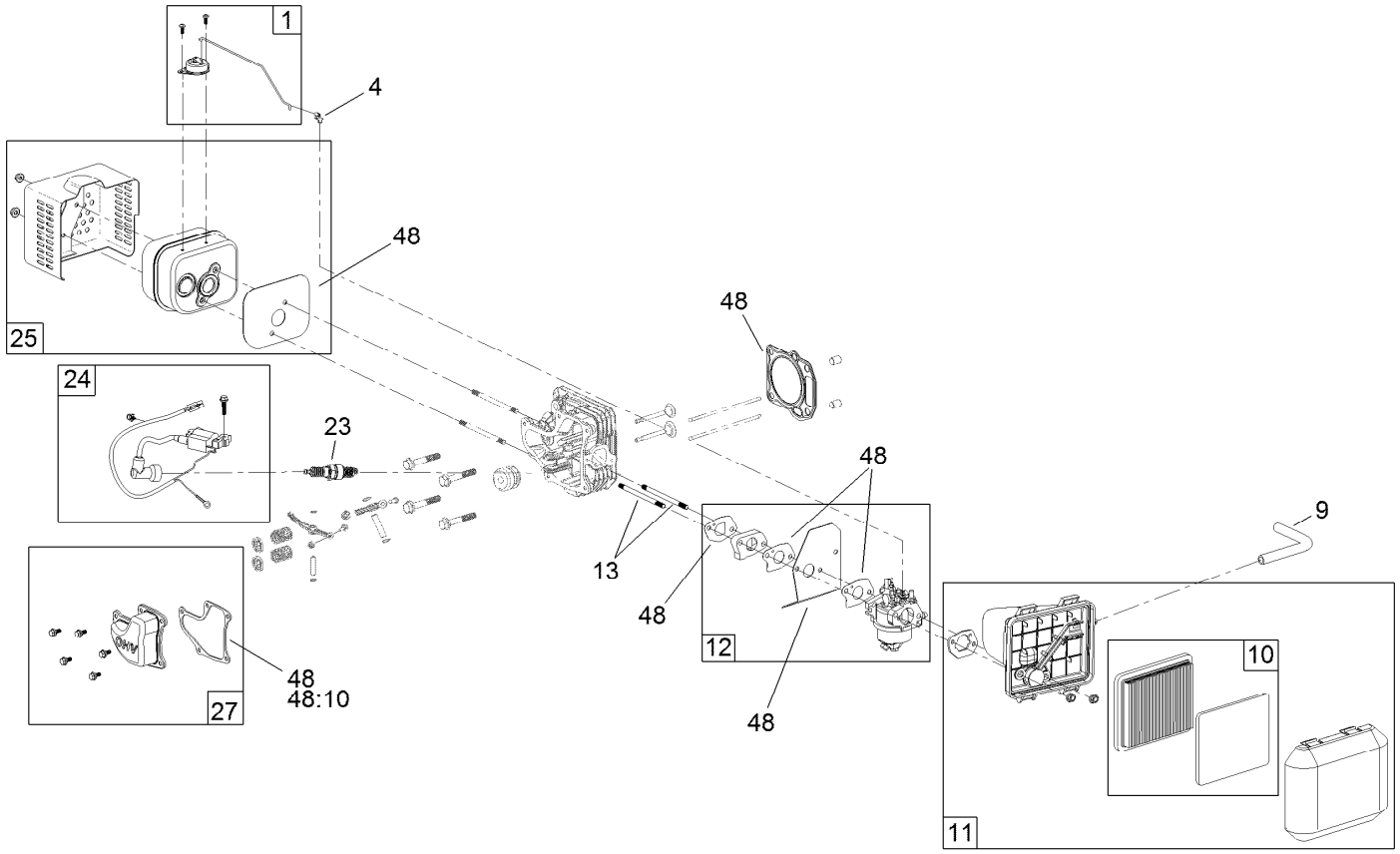

Carburetor, Muffler, Air Cleaner and Valve Cover Assembly

Ref.	*Part Number*	*Qty.*	*Description*
1	121-4175	1	Thermal Control Kit
4	120-4451	1	Lock-Throttle
9	119-1902	1	Tube-Breather
10	119-1909	1	Air Filter And Prefilter Kit
11	121-4177	1	Air Cleaner ASM Kit
12	120-4405	1	Carburetor Repair Kit
12	121-4181	1	Carburetor Complete Kit
13	121-0367	2	Stud-Intake
23	121-4199	1	Spark Plug
24	121-4186	1	Ignition Kit
25	119-1969	1	Muffler And Shield Kit
27	121-4188	1	Valve Cover Kit
48	127-9144	1	Seal And Gasket Kit
48:10	121-4190	1	Gasket-Valve Cover

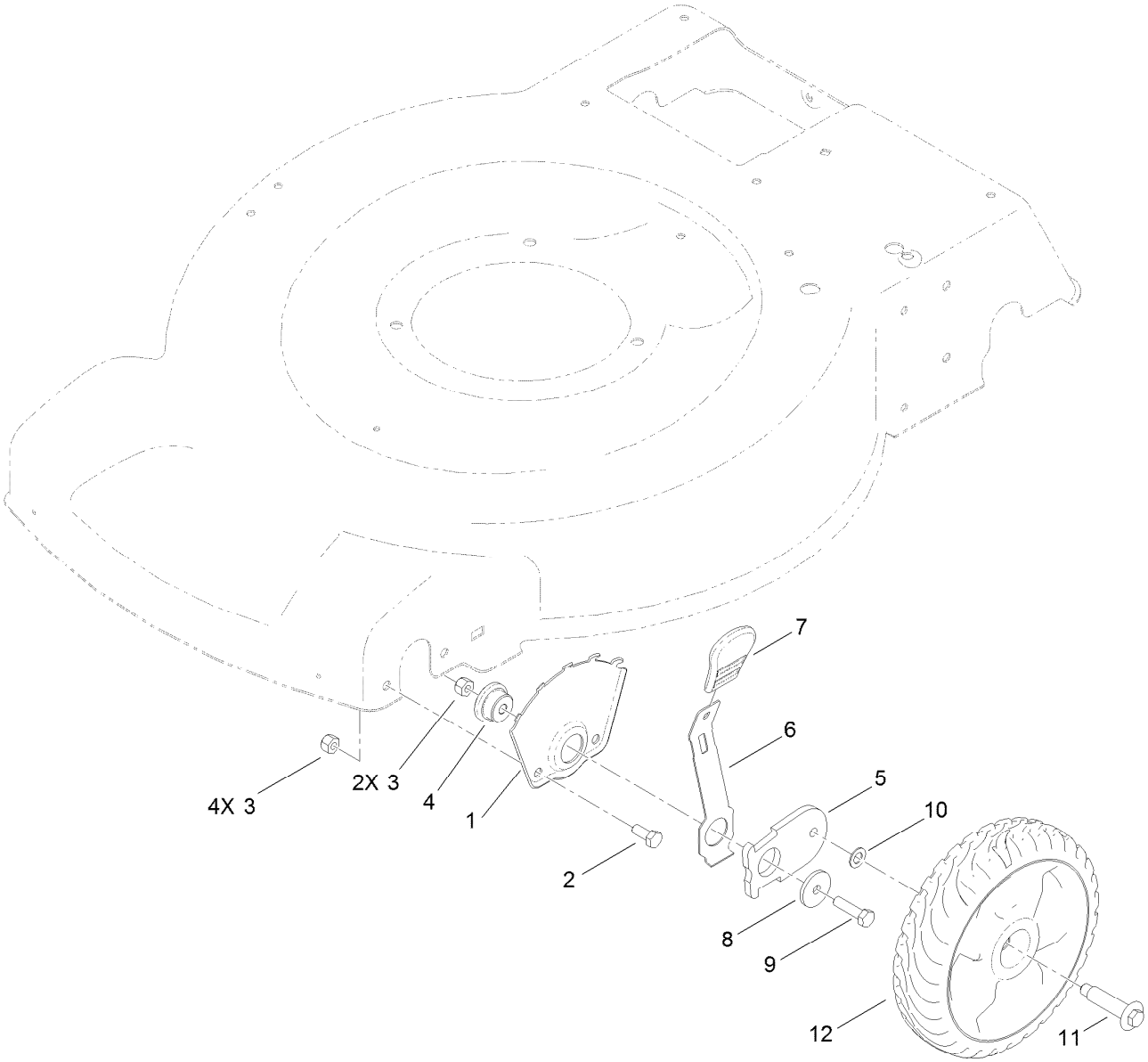

Front Wheel and Height-of-Cut Assembly

Ref.	*Part Number*	*Qty.*	*Description*
1	115-1956-03	2	Plate-HOC, Front
2	322-3	4	Screw-HH
3	3296-29	6	Nut-Lock, NI
4	105-1818	2	Bushing-Mount, HOC
5	105-1807	2	Arm-Pivot, Front
6	105-1809	2	Arm-Spring
7	110-0549	2	Knob-HOC
8	105-3048	2	Washer-Flat
9	322-6	2	Screw-HH
10	40-1940	2	Washer
11	614650	2	Bolt-Shoulder
12	115-2894	2	8 Inch Wheel ASM

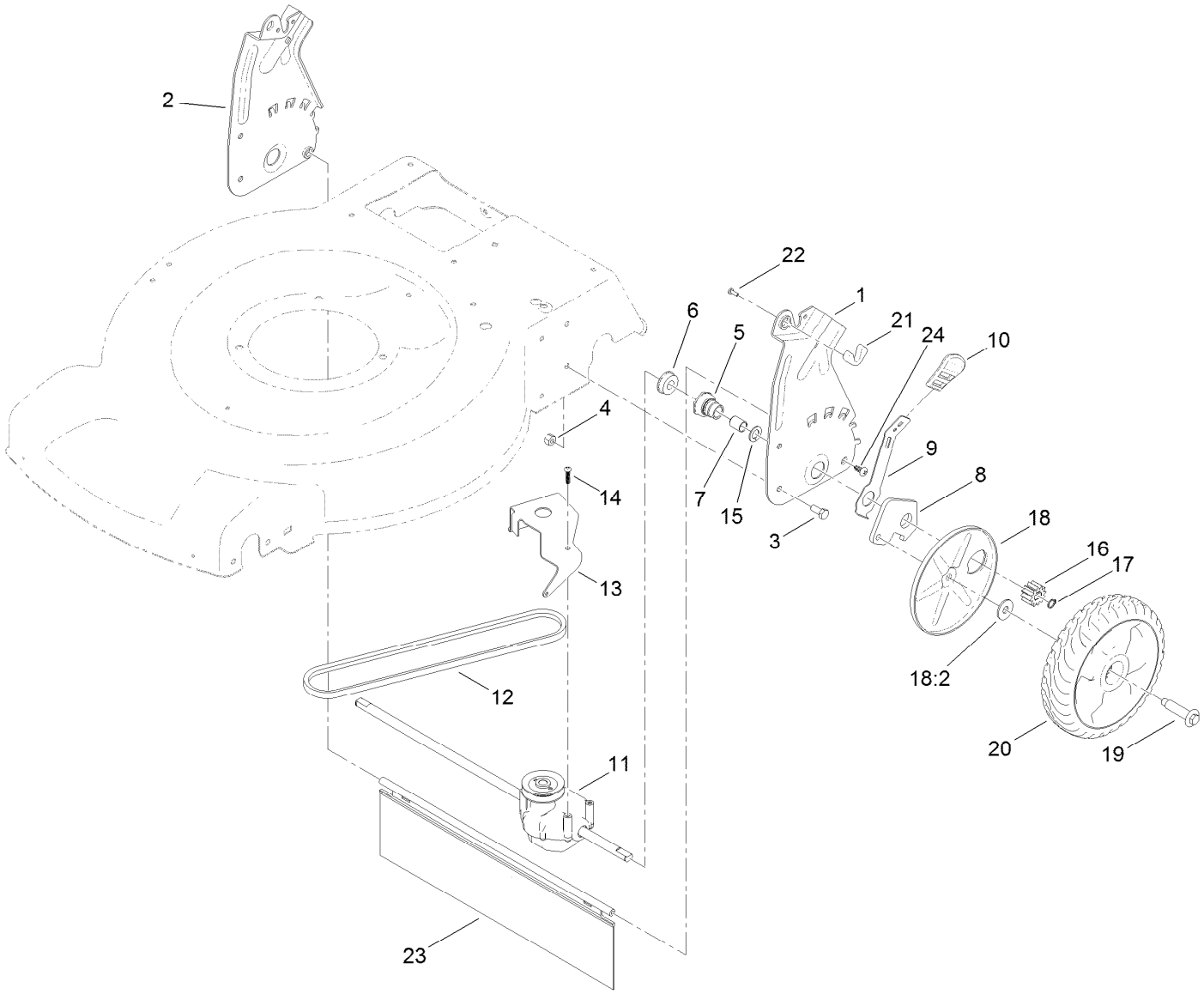

Transmission and Rear Wheel Drive Assembly

Ref.	Part Number	Qty.	Description
1	114-7955-03	1	Plate-Rear, LH (HOC)
2	114-7956-03	1	Plate-Rear, RH (HOC)
3	322-3	4	Screw-HH
4	3296-29	4	Nut-Lock, NI
5	108-9779	2	Retainer-Bushing, HOC
6	104-8699	2	Bearing-Ball
7	108-9782	2	Bushing-Sleeve
8	108-9781	2	Arm-Pivot, Rear
9	108-9780	2	Arm-Spring
10	110-0549	2	Knob-HOC
11	115-4652	1	Transmission
12	115-4669	1	Belt-V
13	114-7977-03	1	Bracket-Transmission

Ref.	Part Number	Qty.	Description
14	108-7476	3	Screw-Plastite
15	110-7191	2	Washer-Thrust
16	115-4668	2	Gear-Pinion
17	32151-61	2	Ring-Retaining
18	110-1792	2	Wheel Cover ASM
18:2	614426	1	Washer-Stepped
19	614650	2	Bolt-Shoulder
20	115-4695	2	8 Inch Wheel Gear ASM
21	115-8406	2	Anchor-Bag
22	105-9437	2	Screw-PPH
23	120-7012	1	Shield-Trailing
24	117-1092	2	Screw-PTH

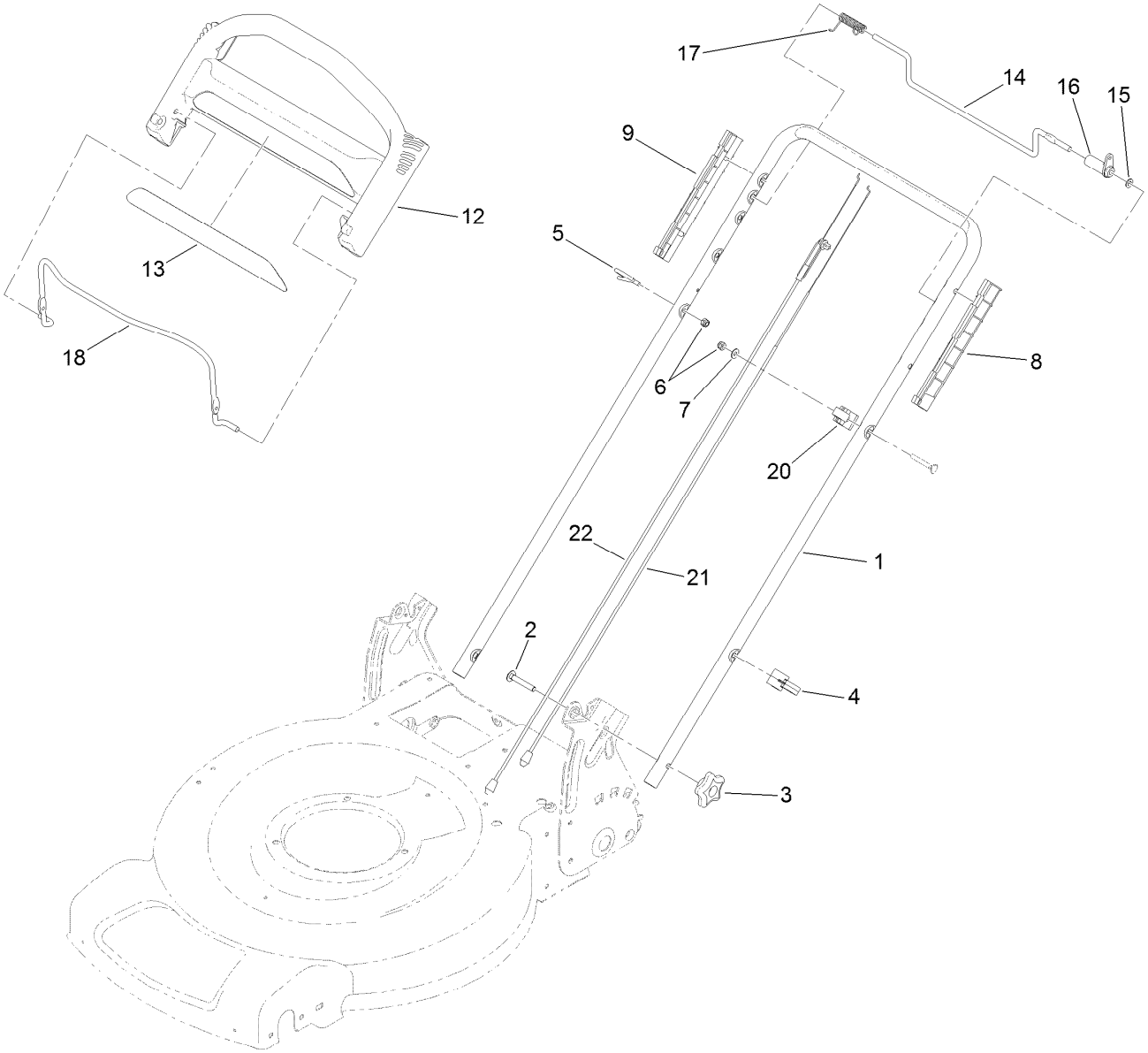

Handle Assembly

Ref.	Part Number	Qty.	Description
1	119-3810-05	1	Handle
2	3230-6	2	Screw-CARR
3	117-5976	2	Knob-Handle
4	114-7988	1	Guide-Cable
5	86-9671	1	Guide-Rope
6	3296-73	2	Nut-Lock, NI
7	3256-1	1	Washer-Flat
8	105-6842	1	Guide-LH
9	105-6841	1	Guide-RH
12	104-8678	1	Handle-Control

Ref.	Part Number	Qty.	Description
13	117-1019	1	Decal
14	99-1588	1	Bar-Control, Traction
15	3256-23	1	Washer-Plain
16	99-1589	1	Lever-Traction
17	121-9118	1	Spring-Torsion
18	104-8679-03	1	Bail-Brake
20	99-5239	1	Anchor-Cable
21	115-8435	1	Cable-Traction
22	115-8437	1	Cable-Brake

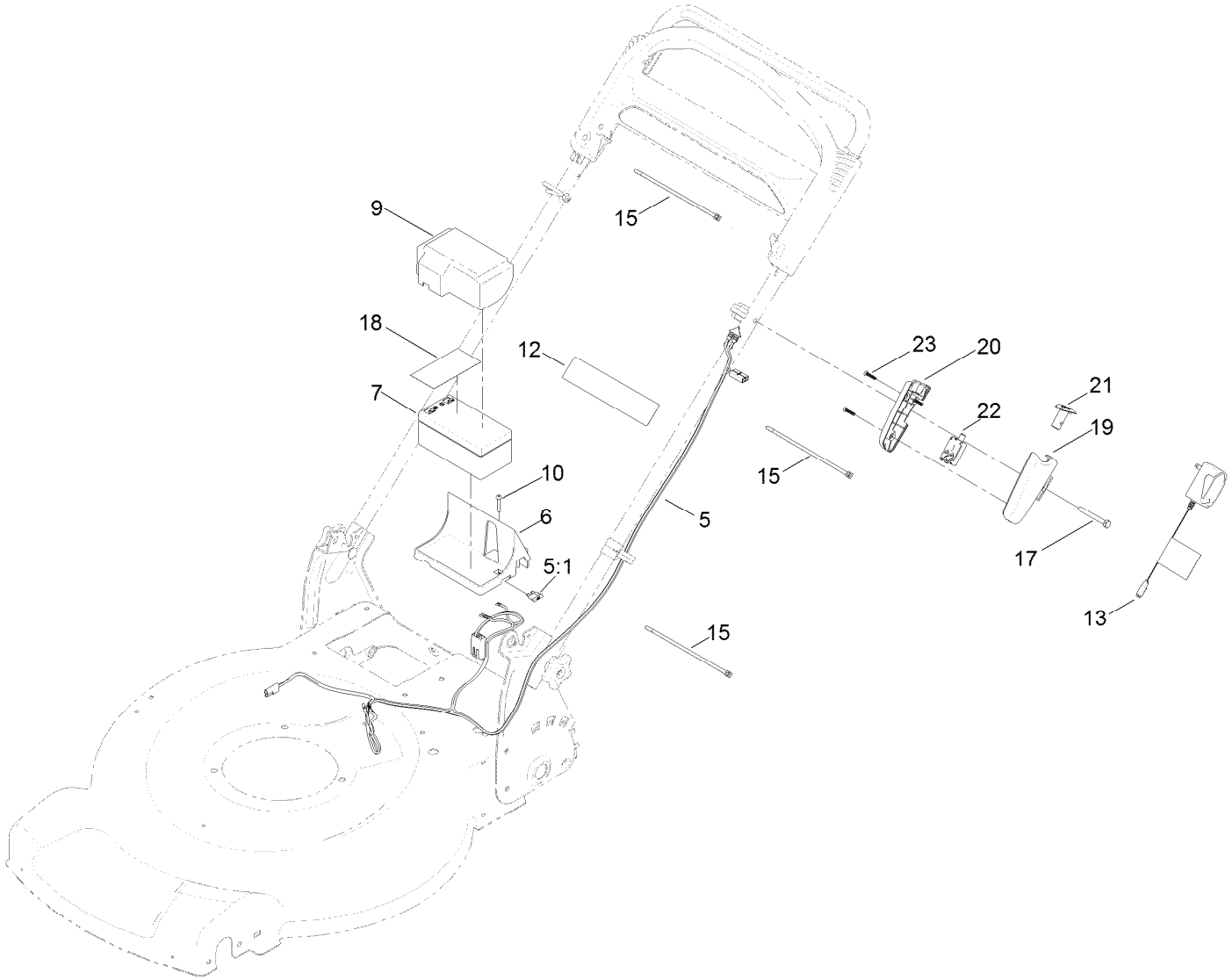

Electrical Assembly

Ref.	Part Number	Qty.	Description
5	125-5024	1	Harness-Wire
5:1	99-6124	1	Fuse-40 Amp
6	114-7936	1	Tray-Battery
7	106-8397	1	Battery-Wet
9	120-3329	1	Cover-Battery
10	32144-97	1	Screw-PPH, Plastite
12	104-7953	1	Decal-Warning
13	114-1588	1	Charger-Battery

Ref.	Part Number	Qty.	Description
15	614249	3	Tie-Cable
17	321-50	1	Screw-HH
18	112-8763	1	Decal-Terminal, Battery
19	125-2468	1	Housing-Switch, LH
20	125-2469	1	Housing-Switch, RH
21	125-2470	1	Button-Switch
22	121-9173	1	Switch-Push Button
23	94-4496	3	Screw-PPH

Attachments and Accessories

For 20374 22in Recycler Lawn Mower

Product Name	Model/Part
Traction Assist Handle Kit	108-8120
Engine Maintenance Kit	20240
Replacement Bag	59310
Replacement Frame and Bag Kit	59312
22 Inch Atomic Blade	59534P

Notes:

TORO®

Count on it.