Form No. 3402-989 Rev B

TORO®

Count on it.

Parts Catalog

22in Recycler®

Lawn Mower

Model No. 20371—Serial No. 316000001 and Up

Register at www.Toro.com.
Original Instructions (EN)

3402-989 B

Ordering Replacement Parts

To order replacement parts, please supply the part number, the quantity, and the description of each part desired.

Understanding Reference Numbers

Each identified part in an illustration has a reference number. The reference number for a part also appears in the parts list, along with other information about the part.

This catalog uses two special reference number formats, one to indicate parts in a service assembly and another to indicate the quantity of a given part in an illustration.

Service Assembly Reference Numbers

Parts in service assemblies have reference numbers in the form a:b. The a represents the reference number of the entire service assembly and the b represents a sequential number unique to each part within the service assembly.

For example, a wheel assembly might be identified by reference number 6, the tire by 6:1, the valve by 6:2, and the wheel by 6:3. When you order the assembly identified by reference number 6, you receive all parts identified by reference numbers 6:1,6:2, and 6:3. However, you may also order any part individually. Reference numbers of this type appear in illustration and in parts lists.

Reference Numbers Indicating Quantity

In an illustration, if a reference number indicates more than one part, the reference number has the form nX y. The n represents the quantity of the part, the X is the multiplication symbol, and the y represents the reference number.

For example, in an illustration, the reference number 2X 37 means that two of the parts identified by reference number 37 are indicated.

Contents

Housing Assembly 4
Rear Bag Assembly 6
Engine and Blade Assembly 8
Transmission and Front Wheel Drive Assembly 10
Height-of-Cut and Rear Wheel Assembly 12
Handle Assembly 14
Attachments and Accessories 16

© 2017—The Toro® Company
8111 Lyndale Avenue South
Bloomington, MN 55420

Contact us at www.Toro.com.
Printed in the USA.
All Rights Reserved

Housing Assembly

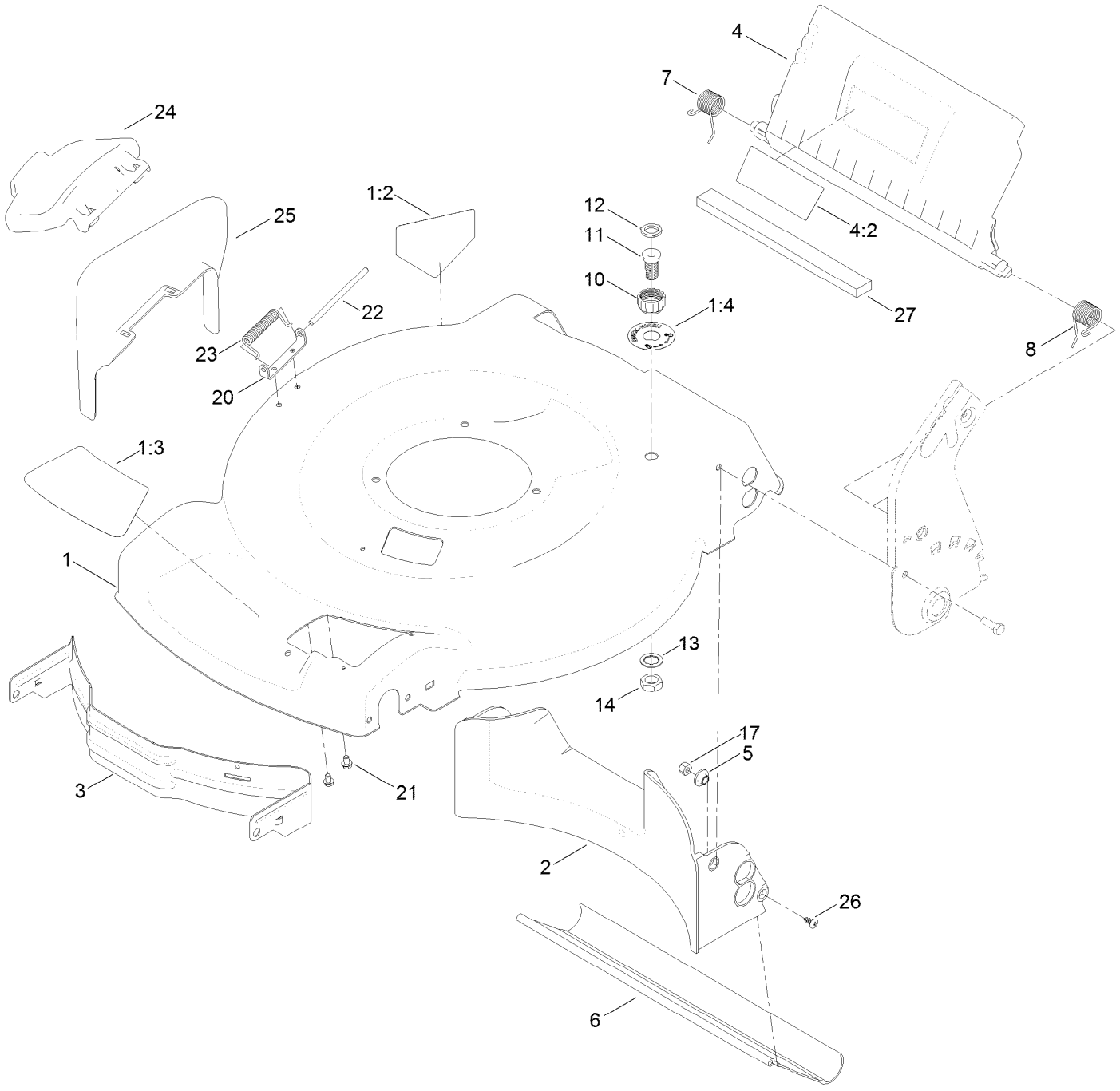

Housing Assembly (continued)

Ref.	Part Number	Qty.	Description
1	117-1085	1	Housing ASM
1:2	94-8072	1	Decal-Danger
1:3	131-4540	1	Decal-Deck, Recycler
1:4	112-8867	1	Decal-Port, Washout
2	120-5218	1	Baffle-Rear
3	114-7963-01	1	Baffle-Front
4	117-4199	1	Rear Deflector ASM
4:2	131-4514	1	Decal-Warning
5	117-5991	2	Washer-Stepped, Baffle
6	115-8420	1	Shield-Trailing
7	114-7924	1	Spring-Torsion
8	115-2859	1	Spring-Torsion
10	112-6401	1	Coupling-Hose, Washout Port
11	112-6400	1	Port-Washout
12	112-6438	1	Washer-Seal, Washout Port
13	3254-5	1	Washer-Tooth, Internal
14	3218-6	1	Nut-Jam
17	3296-29	2	Nut-Lock, NI
20	112-6416	1	Bracket-Cover
21	99-8445	2	Screw-HWH
22	99-5291	1	Rod-Cover
23	99-5293	1	Spring-Torsion
24	115-8449	1	Deflector-Side
25	115-8447	1	Chute-Discharge, Side
26	117-1092	2	Screw-PTH
27	117-5924	1	Foam-Seal

Rear Bag Assembly

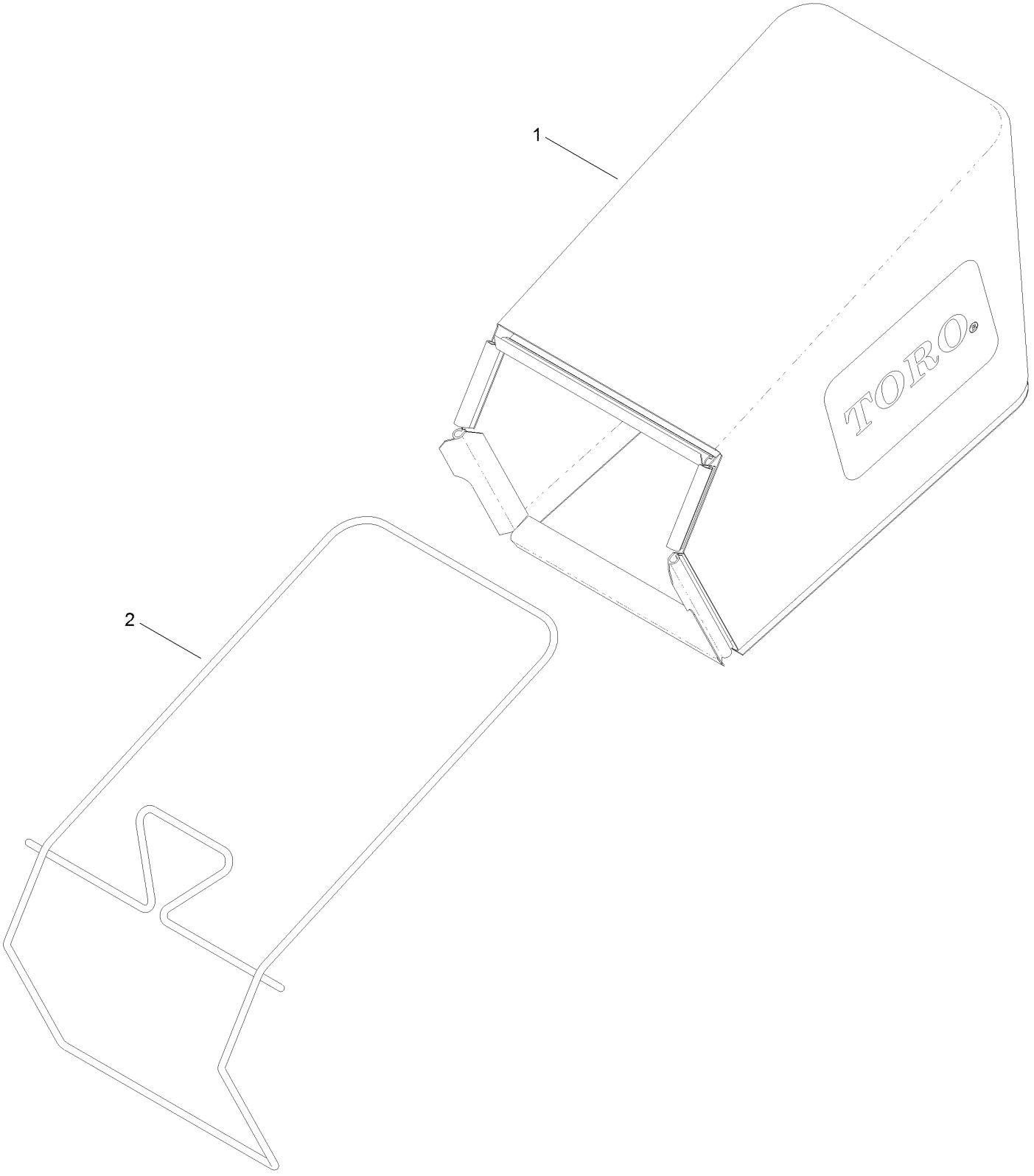

Rear Bag Assembly (continued)

Ref.	*Part Number*	*Qty.*	*Description*
1	115-4664	1	Grass Bag ASM
2	114-2639-03	1	Frame-Bag

Engine and Blade Assembly

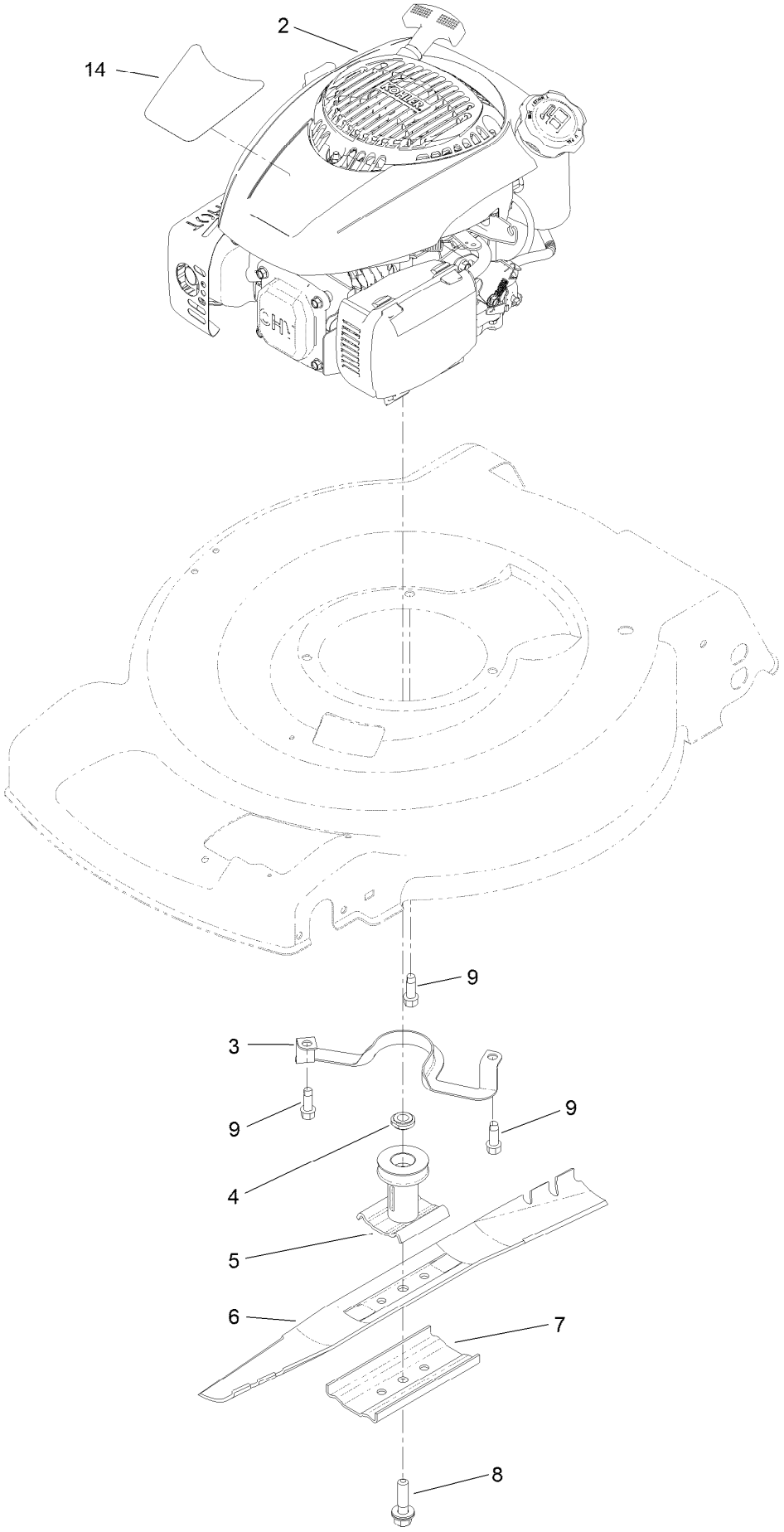

Engine and Blade Assembly (continued)

Ref.	Part Number	Qty.	Description
2		1	Engine-Kohler Xt675-3102 Or Xt675-2101 ●■
3	105-3031-03	1	Guide-Belt
4	106-3999	1	Spacer-Driver
5	106-3987	1	Driver-Blade
6	131-4547-03	1	Blade-22 Inch
7	108-3766-03	1	Support-Blade
8	125-2466	1	Bolt-Blade
9	95-1726	3	Screw-Taptite
14	130-2361	1	Decal-Shroud

● Not serviced separately

■ Obtain parts from www.kohlerplus.com

Transmission and Front Wheel Drive Assembly

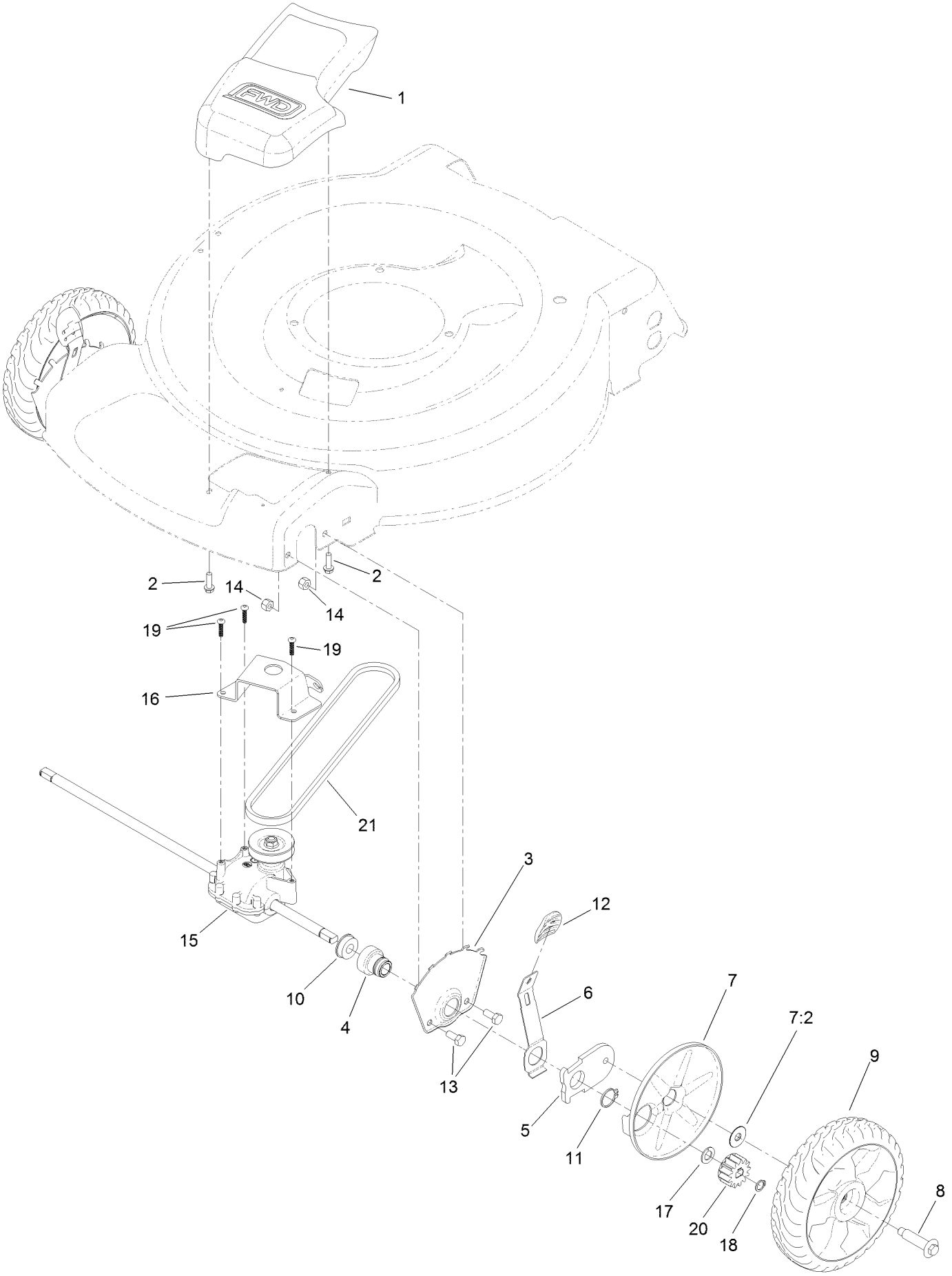

Transmission and Front Wheel Drive Assembly (continued)

Ref.	Part Number	Qty.	Description
1	115-1305	1	Cover-Belt
2	46-8091	2	Screw-HWH
3	115-1956-03	2	Plate-HOC, Front
4	131-0836	2	Retainer-Bearing, HOC
5	105-1807	2	Arm-Pivot, Front
6	105-1809	2	Arm-Spring
7	110-1792	2	Wheel Cover ASM
7:2	614426	1	Washer-Stepped
8	614650	2	Bolt-Shoulder
9	119-0311	2	8 Inch Wheel ASM
10	104-8699	2	Bearing-Ball
11	32151-36	2	Ring-Retaining
12	105-3042	2	Knob-Lever, HOC
13	322-3	4	Screw-HH
14	3296-29	4	Nut-Lock, NI
15	130-6733	1	Transmission ASM
16	114-7978-03	1	Bracket-Transmission
17	110-7191	2	Washer-Thrust
18	32151-61	2	Ring-Retaining
19	108-7476	3	Screw-Plastite
20	131-0896	2	Gear-Pinion, 13T
21	117-1018	1	V-Belt

Height-of-Cut and Rear Wheel Assembly

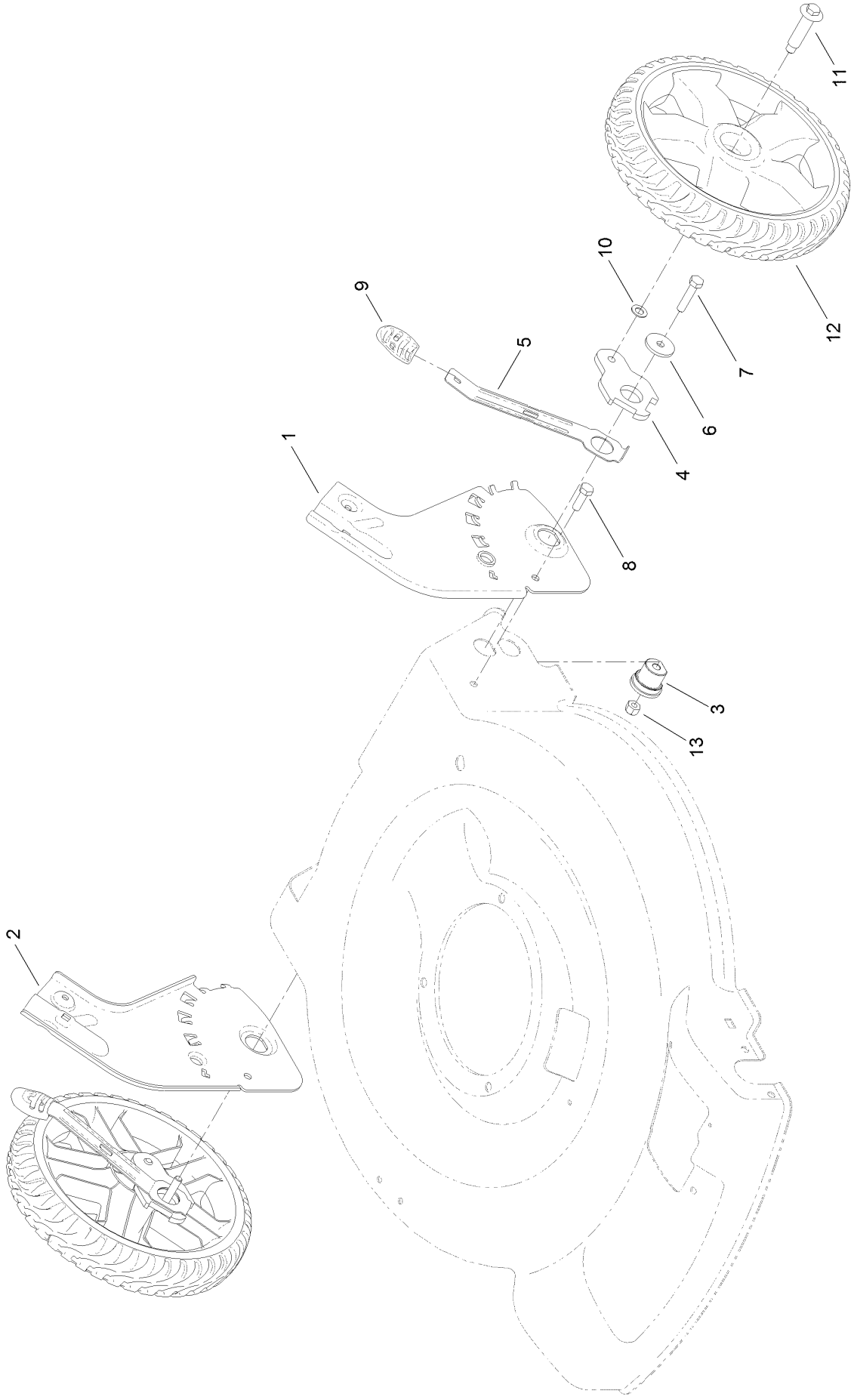

Height-of-Cut and Rear Wheel Assembly (continued)

Ref.	Part Number	Qty.	Description
1	114-7993-03	1	Plate-HOC, Rear (LH)
2	114-7994-03	1	Plate-HOC, Rear (RH)
3	115-4651	2	Bushing-Mount, HOC
4	114-7997	2	Arm-Pivot, Rear
5	115-2899	2	Arm-Spring, Rear
6	105-3048	2	Washer-Flat
7	322-7	2	Screw-HH
8	322-5	2	Screw-HH
9	105-3042	2	Knob-Lever, HOC
10	40-1940	2	Washer
11	614650	2	Bolt-Shoulder
12	119-0313	2	11 Inch Wheel ASM
13	3296-29	2	Nut-Lock, NI

Handle Assembly

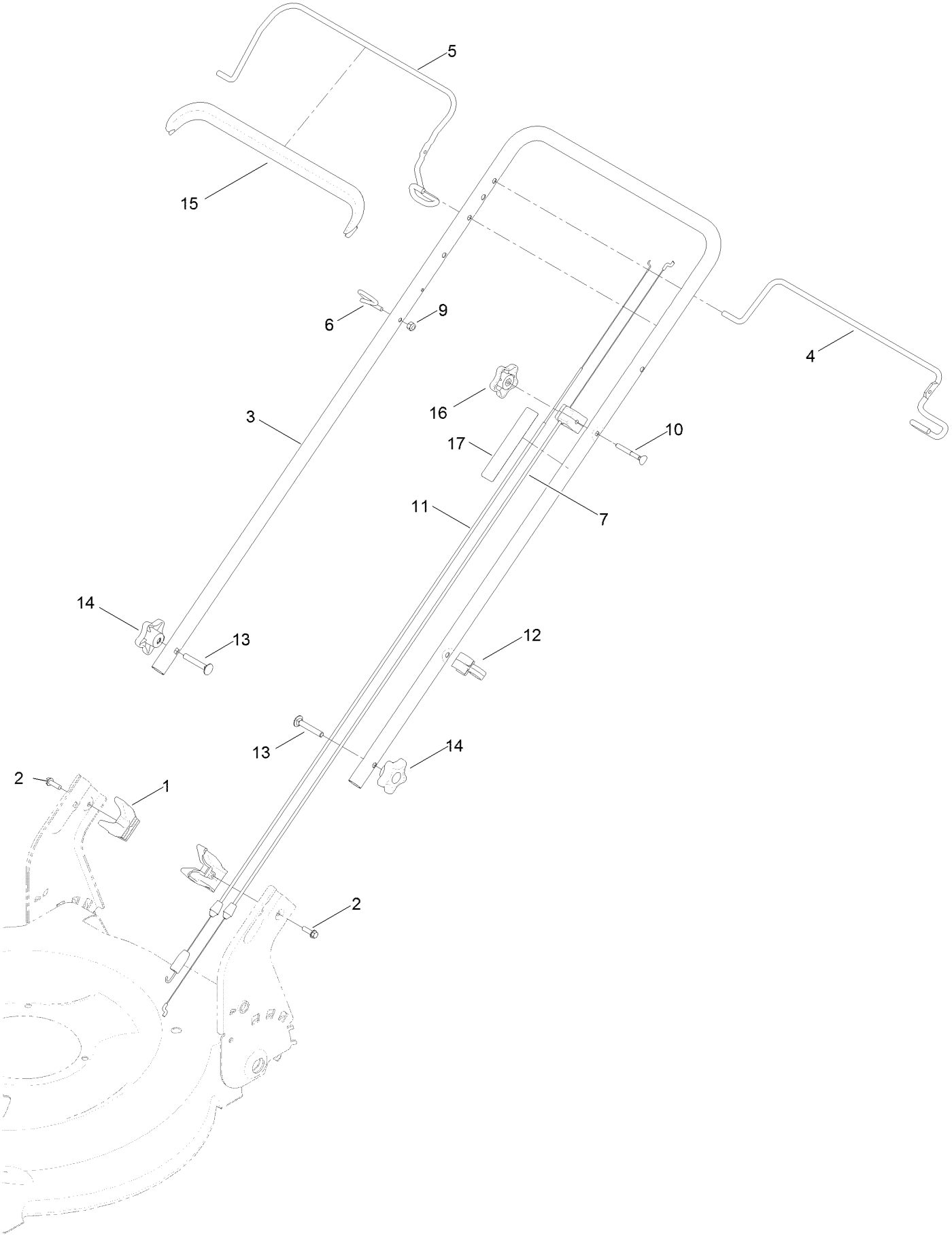

Handle Assembly (continued)

Ref.	Part Number	Qty.	Description
1	115-2866	2	Anchor-Bag
2	46-8091	2	Screw-HWH
3	131-0818-05	1	Handle
4	131-0835-03	1	Bail-Traction
5	131-0821-03	1	Bail-Brake
6	86-9671	1	Guide-Rope
7	112-8818	1	Cable-Brake
9	3296-73	1	Nut-Lock, NI
10	92-2270	1	Screw-Handle
11	119-2379	1	Cable-Traction
12	114-7988	1	Guide-Cable
13	3230-6	2	Screw-CARR
14	117-5976	2	Knob-Handle
15	127-6847	1	Cover-Bail
16	131-0897	1	Knob-Handle, Locking
17	132-4470	1	Decal-Traction, Adjust

Attachments and Accessories

For 20371 22in Recycler Lawn Mower

Product Name	Model/Part
Engine Maintenance Kit	130-8141
Replacement Bag	59305
Replacement Bag and Frame Kit	59307
22 Inch Atomic Blade	59534P

Notes:

Notes:

Notes:



Count on it.