FORM NO. 3318-195

TORO®

SNOWTHROWER ADAPTER KIT

to change idler support, slide, pulley & belt on snowthrower

PART NO. 93-7625

INSTALLATION INSTRUCTIONS

This adapter kit contains parts and instructions to modify 42" snowthrower (Model 79261 & 79262) for 1996, 260 series Yard Tractors using a single groove PTO clutch.

When installing a 42" snowthrower it is necessary to follow these instructions to replace the belt idler and tension spring on the idler assembly. Then follow the new, enclosed, Operator's Manual; Installation procedure to route the new V-belt thru drive and idler pulleys and to mount the snowthrower onto the tractor.

Loose Parts

Note: Use the chart below to verify all parts have been shipped.

DESCRIPTION	QTY.	USE
Operator's Manual	1	Read and use for mounting instructions.
V-Belt	1	Replaces old idler pulley belt.
Flat Idler Pulley	1	Replaces old idler pulley.
Idler Slide	1	Replaces old idler slide.
Idler Support Assy.	1	Replaces old idler support assy.

©The Toro Company - 1995
All Rights Reserved

Printed in USA

Transfer “V” Idler Pulley

1. Remove “V” idler pulley from idler support assembly that came with the snowthrower. (Fig. 1). Transfer the “V” idler pulley onto the new idler support assembly using same hardware (Fig. 1) mounting it in same manner as removed.

   Note: Idler hub extension must be facing slot and pulley should rotate freely.

2. Insert bolt into the center of the adjustment slot.

3. Torque idler bolt to 280 in. lb. (31.5 Nm).

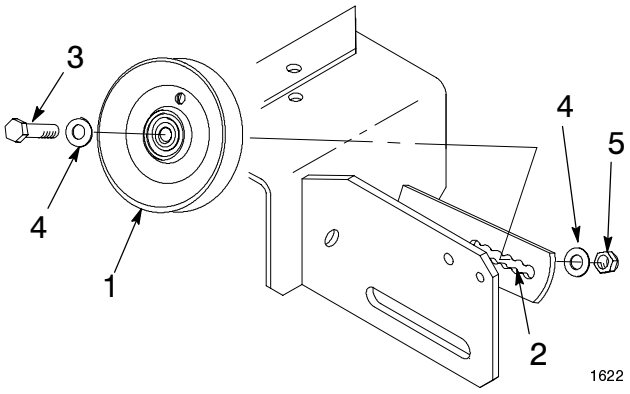

Figure 1

1. V idler pulley
2. Adjustment slot
3. Bolt
4. Washer
5. Lock nut

4. Tighten loosely the bolt securing the catch to the support; so the catch still can rotate. (Fig. 2).

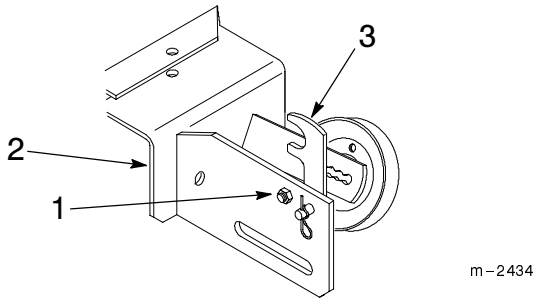

Figure 2

1. Nut and Bolt
2. Idler Support Assy.
3. Catch

Remove Flat Idler Pulley and Slide

1. Remove flat idler pulley from idler slide rod in snowthrower. Retain hardware to attach new flat idler pulley onto new slide in adapter kit (Fig. 3).

2. Remove retainer, spring and rod from idler assembly in snowthrower by unscrewing the large square retainer at the end. (Fig. 3).

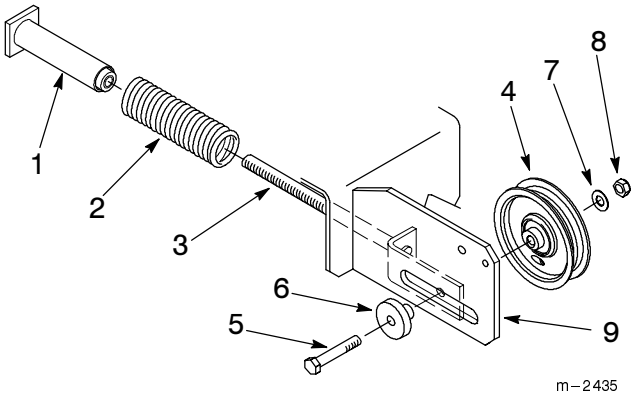

Figure 3

1. Retainer
2. Spring
3. Idler Slide Rod
4. Flat idler
5. Bolt
6. Spacer
7. Washer
8. Lock nut
9. Adjustment Slot

Attach New Idler Slide and Flat Pulley

1. Transfer rod, spring and square retainer to the kit idler support assembly and thread retainer on all the way.

2. Transfer the new flat idler pulley from kit onto the rod in kit idler assembly using same hardware from pulley removed. (Fig. 3).

   Note: Idler hub extension must be facing slot and pulley should rotate freely.

   Note: Spacer shoulder extension must be in slot and slide freely.

3. Torque idler bolt to 280 in. lb. (31.5 Nm).

4. Push on spring retainer to check for free movement of rod in slot (Fig. 3).

Refer to the new Operator Manual supplied in the kit to install and route the new V-belt.

Transfer Idler Support Assembly

1. Attach the new idler support from kit to the tractor lift system using hardware furnished with old support. (Fig. 4).

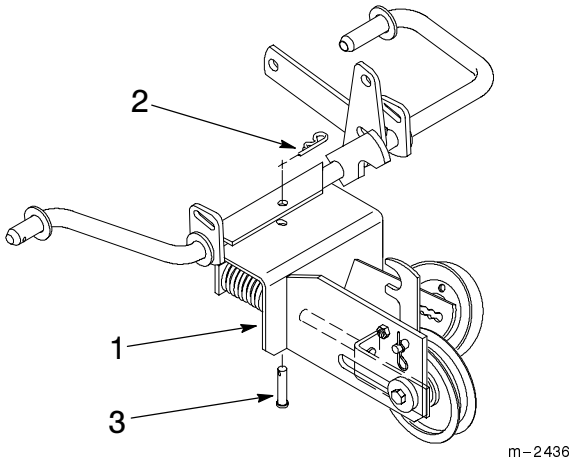

Figure 4

1. Idler Support Assy.
2. Locking Hairpin
3. Clevis Pin